IL992
Rev. 26 - 7/2026

Tek-CARE120

Tone-Visual Nurse Call Signaling System

Installation and Operation Manual

www.tektone.com

Phone: 828.524.9967

Toll-Free: 800.327.8466

Sales: Option 2

Tech Support: Option 3

324 Industrial Park Rd Franklin NC
28734

https://www.tektone.com/contact/

Fax: 828.524.9968

Tek-CARE120

Copyright© 2001-2026 TekTone® Sound & Signal Mfg., Inc., All rights reserved.

No part of this publication may be copied without the express written permission of TekTone® Sound & Signal Mfg., Inc. The content of this manual is furnished for informational use only, is subject to change without notice, and should not be construed as a commitment by TekTone. TekTone Sound & Signal Mfg., Inc. assumes no responsibility or liability for any errors or inaccuracies that may appear in this documentation.

TekTone, the TekTone logo, Tek-ALERT, Tek-BRIDGE, Tek-CALL, Tek-CARE, Tek-CHECK-IN, Tek-COM, Tek-ENTRY, Tek-GUARD, Tek-MICRO, Tek-MMARS, Tek-PAGING, and Tek-SAFE are either registered trademarks or trademarks of TekTone® Sound & Signal Mfg., Inc. in the United States and/or other countries. All other trademarks are the property of their respective owners.

TekTone® Sound and Signal Mfg., Inc., 324 Industrial Park Road, Franklin, North Carolina 28734, USA.

Table of Contents

Introduction and Overview 4

Product Overview 5

Installation 9

- Types of Installation 9
- The NC120 Central Equipment Module 12
- The NC475 Tek-CARE Central Equipment 14
- The NC475 Tek-CARE Central Equipment Hardware 14
- Wiring Installation 16
- Connect Stations 18
- LI132/LI122UN LED Color Configuration 20
- Station Connection Instructions 22
- Connect NC415G3 Master Stations 29
- Connect Data Bus Wiring 30
- Connect Master Bus Wiring 30
- Networking Multiple NC120 CE Modules 30

Configuration Setup 31

- Connect the LS450 ConfigTool Programming Software 31
- Configure an Autodetect Configuration 32
- Configure a Custom System 39

Using the Tek-CARE120 System 43

- Placing and Resetting Calls 43

Introduction and Overview

Introduction

Welcome to the installation manual for the Tek-CARE120 Nurse Call System. This system is designed to be low cost, easy to install, and extremely reliable. This manual will walk you through the installation and configuration process, and will cover system operation as well as common troubleshooting steps.

If you have questions at any point during the installation process, contact our Technical Support Department by email at teksupt@tektone.com or by phone at 800.327.8466 or 828.524.9967. Choose Option 3 for Technical Support.

Overview

The Tek-CARE120 system is a versatile system that can satisfy the needs of a wide range of facilities. At its core, the Tek-CARE120 system is a two-wire nurse call system designed for easy installation and years of trouble-free operation. The system is available with a variety of call stations such as two-button pull-cord stations, 1/4" jack call cord stations, duty stations, dome lights, and more.

In addition to these items, the Tek-CARE120 system can be easily integrated with existing TekTone nurse call systems, nurse call systems manufactured by other companies, as well as a wide variety of building systems such as fire alarm systems, security and access control systems, and much more.

The Tek-CARE120 system may be used as either a standalone nurse call system using NC415G3 Master Stations, or it may be connected to other TekTone nurse call systems, such as the Tek-CARE400 family, Tek-CARE570, or Tek-CARE750 over the Tek-CARE Network. With the addition of the LS601 Tek-ALERT Integration Manager, the Tek-CARE120 system is capable of communicating with many other types of building systems, such as fire alarm and security systems. The LS601 Tek-ALERT Integration Manager also allows the system to display and log various events from older analog TekTone nurse call systems such as the Tek-CARE NC110, NC150, NC200, and 300/III systems.

Copyright © TekTone Sound and Signal Mfg., Inc. All Rights Reserved

Product Overview

NC475 Tek-CARE Central Equipment: The NC475 Tek-CARE Central Equipment is a connection point for the NC415G3 and NC404TS Master Stations. The NC475 also includes the Tek-CARE Reporting system, and can be licensed for connections to other TekTone hardware on the Tek-CARE Network. In addition, the NC475 can also connect to the facility's LAN, enabling the use of the Tek-CARE Staff App for mobile devices, Tek-CARE TV app, as well as the Tek-CARE Event Monitor App for Windows, which runs on facility PCs.

NC120 Central Equipment Module: The main component of the Tek-CARE120 system is the NC120 Central Equipment (CE) Module. The CE module is designed to be stackable or rack mountable. The NC120 CE Module can operate as a standalone system, or as a module on a larger, integrated Tek-CARE nurse call system. The NC120 CE Module provides connections for 64 Tek-CARE120 room controllers and six NC415G3 Master Stations. Multiple CE modules may be networked together to create a larger system.

NC415G3 Master Station: Touchscreen master station used to interact with the Tek-CARE120 system. The NC415G3 Master Station displays calls from the Tek-CARE120 system and provides limited programming and configuration ability for the Tek-CARE120 system. The NC415G3 uses a five-inch LCD touchscreen to provide audible and visual annunciation of system calls. The NC415G3 may be mounted using the IH415D desk stand or wall-mounted using the IH415W wall-mount bracket.

NC403TS Tek-CARE Monitor: Purpose-built touchscreen monitor for the Tek-CARE nurse call system. It displays call information, statuses, etc. throughout the facility. The monitor can also modify its own annunciation settings and display system faults. The NC403TS uses a 24-inch touchscreen and may be mounted using the CL234 wall-mount bracket. Refer to IL1052 NC403TS Monitor & NC404TS Master Station Installation Manual for more information.

Copyright © TekTone Sound and Signal Mfg., Inc. All Rights Reserved

L122/LI122BL Room Controller: Provides connections for six Tek-CARE120 stations and one connection for the Tek-CARE120 data bus. In most instances, the room controller is installed outside a room in the same position as a traditional dome light. The two-conductor cable is used to connect Tek-CARE120 stations to the LI122-Series Room Controllers. The rear of the room controller contains a 14-pin header. Pins 1-12 are used in pairs for station connections, and pins 13 and 14 are used to connect the room controller to the Tek-CARE120 data bus. The LI122 annunciates high priority calls with red LEDs and low priority calls with white LEDs. The LI122BL is identical to the LI122, but with blue LEDs for high priority calls and white LEDs for low priority calls.

> **NOTE:** A slot is provided at the seam between the dome light plastic base and lens faceplate to aid in separating the two parts whenever the need arises. Place a flat-head screwdriver or similar tool into the slot to lift off the face-plate.

PM120 Room Controller: Provides connection points for Tek-CARE120 stations without the dome light LEDs found on the LI132-series room controllers. The PM120 is designed to be installed out of sight.

SF131 Single and SF132 Dual Patient Stations: The SF131 and SF132 Patient Stations include one or two DIN jacks for call cords, one or two call-assurance LEDs, and a single button to reset calls. Pressing the call cord's button registers a call at the NC415G3/ NC404TS Master Station and all associated dome and zone lamps. These stations can replace the legacy SF121 and SF122 Stations.

A cord-out call is registered if the call cord is accidentally removed from the call cord jack. The JK401 Dummy Plug is required when a station does not have a call cord plugged in, to prevent the station from placing a cord-out call.

The station assembly snaps onto a wall mounting plate leaving no visible screw holes.

SF121 and SF122 Patient Stations: The SF121 Patient Station is designed to provide a single 1/4" jack for standard call cords. The SF121 mounts near a resident's bed or chair, and enables calls to be placed using pushbutton call cords, geriatric call cords, pneumatic call cords, and more. The SF121 is equipped with an illuminated reset button. The SF122 Patient Station is a dual-jack version of the SF121.

Copyright © TekTone Sound and Signal Mfg., Inc. All Rights Reserved

SF133A Water-Resistant Emergency Pull-Cord Station: The SF133A Water-Resistant Emergency Pull-Cord Station includes a call button, optional pull cord, an LED for call indication, and a reset button. The optional pull cord is six-feet long and can be adjusted to a smaller length as needed.

When a call is placed, it is registered at the master station, room controller with dome light, zone lights, and duty station. Standard button caps for call types include: CALL, EMERG, CODE, RESET, ROUND, and CHECK-IN. Custom call types can be created using the LS450 ConfigTool software. For humid or wet locations, the SF133GK Gasket Kit ***must*** be installed with the SF133A to provide a proper seal.

IH131 and IH132 SF130-series Adapter Plates: The IH131(single-station) and IH132 (double-station) are adapter plates that are mounted onto existing plaster rings or electrical boxes. The mounting plate for an SF130-series station is then attached to the IH131/2, with the station snapping onto its mounting plate for simple installation.

SF123 2-Button Pull-Cord Station: Used to place a variety of calls on the Tek-CARE120 system. The SF123 uses interchangeable inserts depending on the desired function of the station. The SF123 is most commonly used as an Emergency station, but can be easily configured for Bath, Code Blue, and Emergency 2 calls. Custom call types may also be created, and custom call type inserts can be generated using the LS450 Config Tool software. The SF123 can also be used as a room-level reset button and a check-in station. Use the RP187K Gasket Kit for mounting in wet environments.

SF123V Vandal 2-Button Station: The SF123V Vandal 2-Button Station has two large, low-profile, vandal resistant push buttons for Call and Cancel, and is also equipped with a call assurance LED.

The SF123V serves as a peripheral staff emergency switch when used with a staff emergncy station. Up to six peripheral SF123V 2-Button Stations may also be located within the ward to provide additional call points.

SF123PSY Psychiatric 1-Button Station: The SF123PSY is used with the SF336A; activating the SF336A outside the ward enables the staff emergency station inside the ward, plus all associated SF123PSY stations, and places an Enabled call at the nurses master station. The in-use LED on the key switch indicates that the ward's staff station and emergency switches are on.

If a staff member requires emergency assistance, using the station or any of the emergency switches places a high priority call to the master station. Call placement is indicated by an LED on the staff station or emergency switch.

Copyright © TekTone Sound and Signal Mfg., Inc. All Rights Reserved

SF336A Vandal Key Switch: Activating the SF336A Key Switch outside the ward enables the staff emergency station inside the ward, plus all associated SF123V/PSY switches, and places an Enabled call at the nurses master station. The in-use LED on the key switch indicates that the ward's staff station and emergency switches are on.

SF125 Duty Station: Used to alert staff to pending Tek-CARE120 system calls. The duty station is installed in areas where call annunciation is needed, but the full functionality of a master station is not. Four LEDs communicate the type of active call, and an audible tone alerts staff members when calls are placed. The SF125 duty station uses two points on the LI132 Dome Lamp or LI122UN/PM120 Room Controllers.

SF126DC Dry Contact Output Module: The Normally Open (N.O.) Dry Contact Module provides a two-pin header for a relay/device connection and another for the station connection. Upon initiation it will provide one of four programmable output behaviors; from the master station, either a 5-second on or a toggle on/off output, or at the station, a local or zone output. The SF126DC can be mounted individually or with another SF120 peripheral, depending on the application.

PM123 Auxiliary Input Module: The PM123 is a module used to monitor normally open dry contacts such as door switches, emergency pushbuttons, and alarm contact outputs. The PM123 is designed to be installed out of sight. Up to two individual contacts can be monitored with a single PM123. The PM123 may also be used as an auxiliary check-in device. Normally open contacts such as door switches, motion detectors, or pressure pads may be used with the PM123 to satisfy a resident check-in requirement on the system.

CT160 Cable Adapter: (CT160K pictured - CT160 with housing) Designed to adapt a connection from a two-wire flying lead to an 8P8C connector. The CT160 may be connected to LI132, LI122UN, or PM120 room controllers or can be ordered as the CT160K which includes housing.

Copyright © TekTone Sound and Signal Mfg., Inc. All Rights Reserved

Installation

Installation for the Tek-CARE120 system is designed to be very straightforward.

When making wiring connections, use quality crimp connectors such as Dolphin® Super B® connectors. Do not use wire nuts. Adequately protect all splices using junction boxes.

Installation Workflow:

- Install the NC475 Tek-CARE Central Equipment and all NC120 CE Modules.
- Install the backup batteries.
- Run data bus wiring through the facility.
- Install and address LI132/LI122UN/PM120 Room Controllers.
- Connect stations to room controllers.
- Run master bus wiring and make 8P8C terminations.
- Check data bus for shorts and connect master and data bus wiring to the NC120 CE Module.
- Power on the NC475 and all NC120 CE Modules.
- Create a configuration using the LS450 ConfigTool software.
- Test the Tek-CARE120 system.
- Back up the configuration and turn the system over to the facility.

Types of Installation

There are two types of installations available for the Tek-CARE120 system, a **One-to-One** installation and a **Custom** installation.

One-to-One

A one-to-one installation strategy involves installing a single LI132 Dome Lamp, LI122UN, or PM120 Room Controller outside of each room in the facility and using the points on that room controller to connect to stations installed in the room.

In this installation strategy, stations are normally wired to their default points on the room controller. The room controller will then annunciate calls from its attached stations only.

Custom

In a custom installation, each point on a room controller can be reassigned to a unique Station ID. This enables the room controller to drive stations installed in different rooms. A custom installation strategy also enables a single room controller to drive multiple patient stations in a single area, such as a ward.

> **NOTE:** Custom installations require training and a ConfigTool Plus or ConfigTool Elite license. Visit https://www.tektone.com/training/ for training information.

Copyright © TekTone Sound and Signal Mfg., Inc. All Rights Reserved

Installation Concerns

When installing the Tek-CARE120 system, organization is key. As you install the system, note the DIP switch address of each room controller, the physical location of the room controller, and which stations are connected to the room controller on each point.

Keeping detailed records throughout the installation process will greatly simplify system programming and setup. Below is an example of a completed programming worksheet.

		Module:	0	
		Port:	1	
		Address:	0	
Point	**Default Station ID**	**Assigned Station**	**Hardware Type**	**Function**
1	0100	Rm xxx	SF122	Side A Call
2	0100	Rm xxx	SF123	Code Blue
3	0100	Rm xxx	SF123	Bath
4	0100	Rm xxx	-	-
5	0100	Rm xxx	-	-
6	0100	Rm xxx	IR160	Audio Spkr 1
Red / Blue	0100	Rm xxx		Standard / Zone
White	0100	Rm xxx		Standard / Zone

Power Considerations

In order to stay within the power limits of the NC120 CE Module and ensure reliable system performance, the Tek-CARE120 Power Calculator may be downloaded at **https://www.tektone.com/pdf_files/il1116_tc120_160-load_value%20calculator.xlsx**.

Copyright © TekTone Sound and Signal Mfg., Inc. All Rights Reserved

Figure 1 - NC120 CE Module Connections

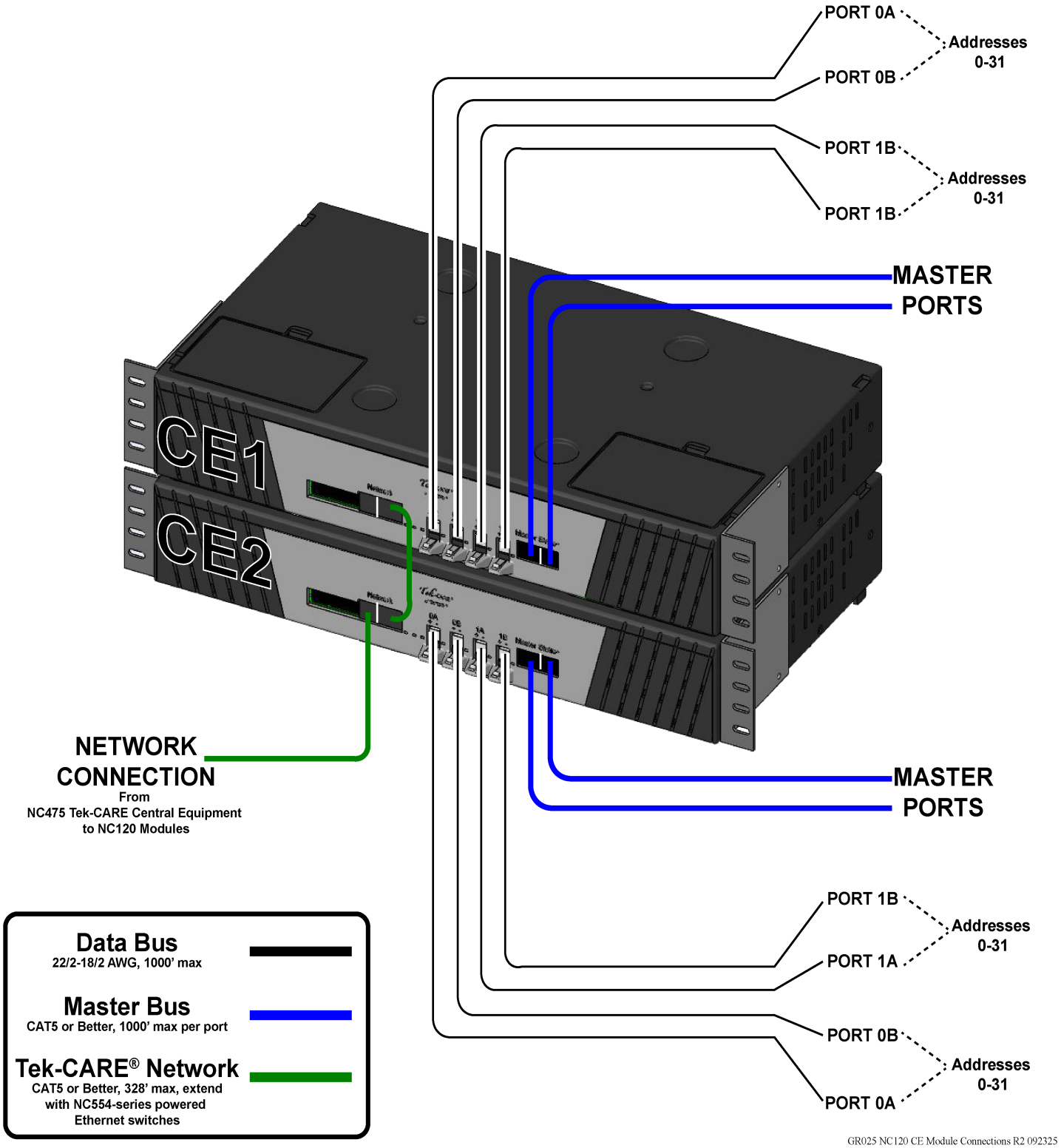

GR025 NC120 CE Module Connections R2 092325

Copyright © TekTone Sound and Signal Mfg., Inc. All Rights Reserved

The NC120 Central Equipment Module

The NC120Central Equipment Module contains all necessary connections for the Tek-CARE120 hardware as well as the backup batteries for the system. The NC120 CE Module is designed to be mounted in a standard 19" server rack using included CL120RM brackets. Modules may also be desk-mounted and stacked. The NC120 CE Module requires 120VAC or 240VAC power, and must be connected to a generator-backed circuit intended for life safety equipment.

NOTE The NC120 CE is supplied with a 4A fuse accessible via a cover just below the power cable connection on the rear of the module. If the module is to be operated on 220VAC power, this fuse MUST be swapped for a 2A fuse. The 2A fuse is not included.

If the NC120 CE Module is not mounted in a server rack, allow adequate air space around the front, sides, and back of the unit. At least 6" of airspace must be maintained for the unit to operate reliably. Refer to **- NC120 CE Module Connections on the previous page** for NC120 CE port descriptions.

On the front of the NC120 CE Module, you will find a bank of DIP switches. These DIP switches are used to configure various options on the CE module and to provide an address for the CE module.

The two-position DIP switch indicated by the STA/LOC is for future use, and both DIP switches should be turned OFF. If either switch is turned on when the module boots up, the NC120 CE Module will return an LED error code 30 (PORT_MODE_NOT_SUPPORTED). The yellow and red LEDs will be lit, and the green LED will flash a two-digit code.

The small bank of 4 DIP switches on the left is used for the following functions. Note that the down position of the switch is on. Normal settings are indicated in parenthesis.

Figure 2 - Module DIP Switch Addressing

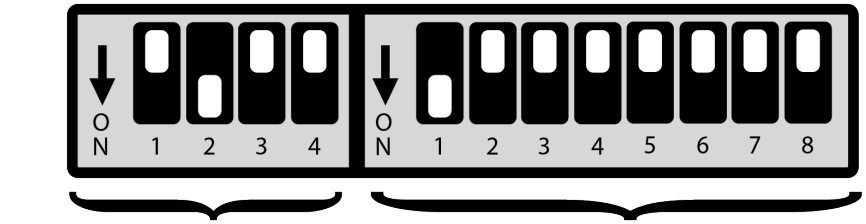

SW#	Function if SW is turned ON
SW1	Redefault Module Database
SW2	Silence Audible Fault Buzzer
SW3	Redefault Module Subnet to 192.168.1.XXX
SW4	Factory and Troubleshooting Use Only

SW#	Function if SW is turned ON
SW1	Address Bit 1 (Value 1)
SW2	Address Bit 2 (Value 2)
SW3	Address Bit 3 (Value 4)
SW4	Address Bit 4 (Value 8)
SW5	Address Bit 5 (Value 16)
SW6	Address Bit 6 (Value 32)
SW7	Address Bit 7 (Value 64)
SW8	Factory and Troubleshooting Use Only

GR014 GEN2 Module DIP Switch Diagram R3 112922

Copyright © TekTone Sound and Signal Mfg., Inc. All Rights Reserved

Switch 1 – Redefault the database. (Off/Up)

Switch 2 – Silence the audio alarm buzzer. (On/Down)

Switch 3 – Redefault network subnet assignment to 192.168.1. (Off/Up)

Switch 4 – Factory and troubleshooting use only. (Off/Up)

The second bank of 8 DIP switches is used to set the address of the NC120 CE Module.

Switch 1 – Switch 7 – Used to select the CE module's address. Valid addresses are 1-75. Note that though there are 75 available DIP switch addresses, no more than 20 modules may be installed on a single Tek-CARE system. Switch 1- Switch 7 utilize standard binary addressing, with Switch 1 being 1 and Switch 7 being 64.

Switch 8 – Factory Use Only. (Leave turned Off/Up)

Install Backup Batteries

Before proceeding with system setup, install the backup batteries in the module. Open the two-battery compartment covers on the top of the module.

Locate the red (positive) and black (negative) wires with female spade connectors under each door. Move the wires out of the way and place the batteries in the holders and connect the spade terminals to the batteries as shown below.

Connect the red leads to the positive terminal of each battery and the black leads to the negative terminal of each battery.

Figure 3 - Battery Connections

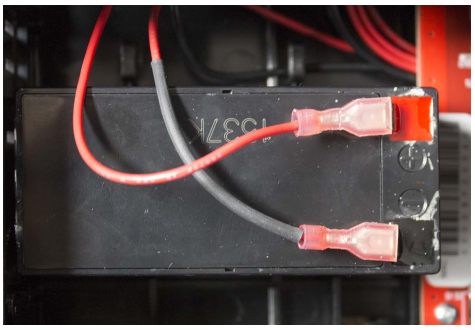

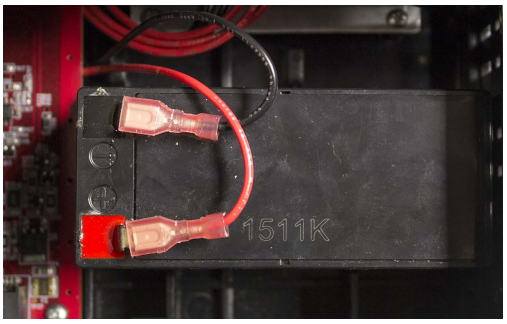

The Tek-CARE120 Data Bus

The Tek-CARE120 data bus is a two-wire serial communications bus. There are four ports on the front of the module, each capable of driving up to 1,000 feet of data bus and up to 16 LI132/LI122UN.

There are four 8P8C jacks on the front of the module. The two on the right are for NC415G3 Master Stations, and two on the left for Tek-CARE Network connectivity. Each module supports up to six master stations, three per port.

To begin installing the NC120 CE Module, mount the module either on a server rack or on a shelf. Plug in the supplied AC power cord, and turn the unit on. You are now ready to begin connecting field wiring to the module.

Copyright © TekTone Sound and Signal Mfg., Inc. All Rights Reserved

The NC475 Tek-CARE Central Equipment

The NC475 Tek-CARE Central Equipment is used to provide a central reporting database for all connected Tek-CARE products, a connection point for the Tek-CARE Network, connections for Tek-CARE120 hardware, and more.

All connections are located on the rear of the NC475. Though the NC475 is typically installed headless, a monitor, keyboard, and mouse may be connected if desired. This provides the NC475 with most of the capabilities of a master station. In most facilities, the NC475 will be installed out of sight in an equipment closet or server room, negating the need for any peripherals to be attached to the NC475.

The NC475 must be dedicated to the Tek-CARE system. Do not attempt to install non-TekTone applications on the NC475. Do not connect non-TekTone hardware to the NC475 unless specifically instructed to by TekTone Technical Support.

The NC475 Tek-CARE Central Equipment Hardware

The NC475 includes a call notification screen, status LEDs, and navigation buttons. It also includes ports for all the necessary connections to the Tek-CARE system as shown below.

Figure 4 - NC475 Connections

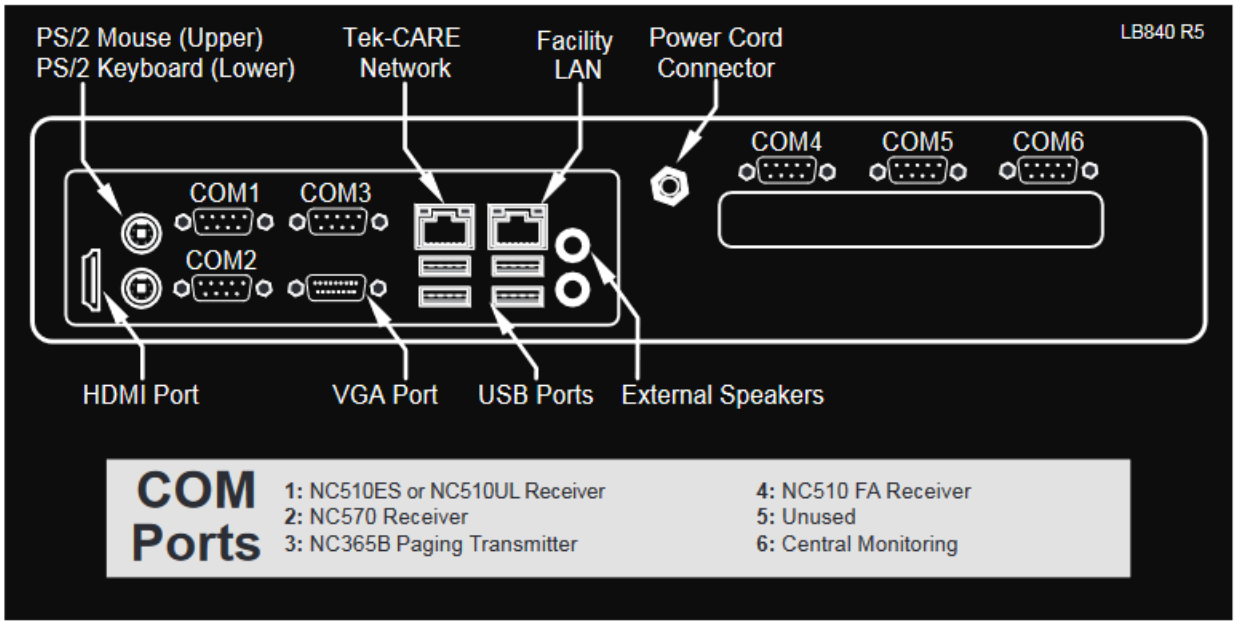

The NC475 Tek-CARE Central Equipment includes a connection diagram on the bottom of the unit. Refer to this label for COM port connections. The Tek-CARE Network port is used to connect the NC475 to the Tek-CARE Network (an NC554-series powered Ethernet switch may be required depending on network topology or ConfigTool network access). The Facility LAN network port is used to connect the NC475 to the facility's Local Area Network.

For detailed NC475 installation, setup, and networking instructions, please see IL1012 NC475 Tek-CARE Central Equipment Installation and Operation Manual.

Copyright © TekTone Sound and Signal Mfg., Inc. All Rights Reserved

Figure 5 - Bus Wiring

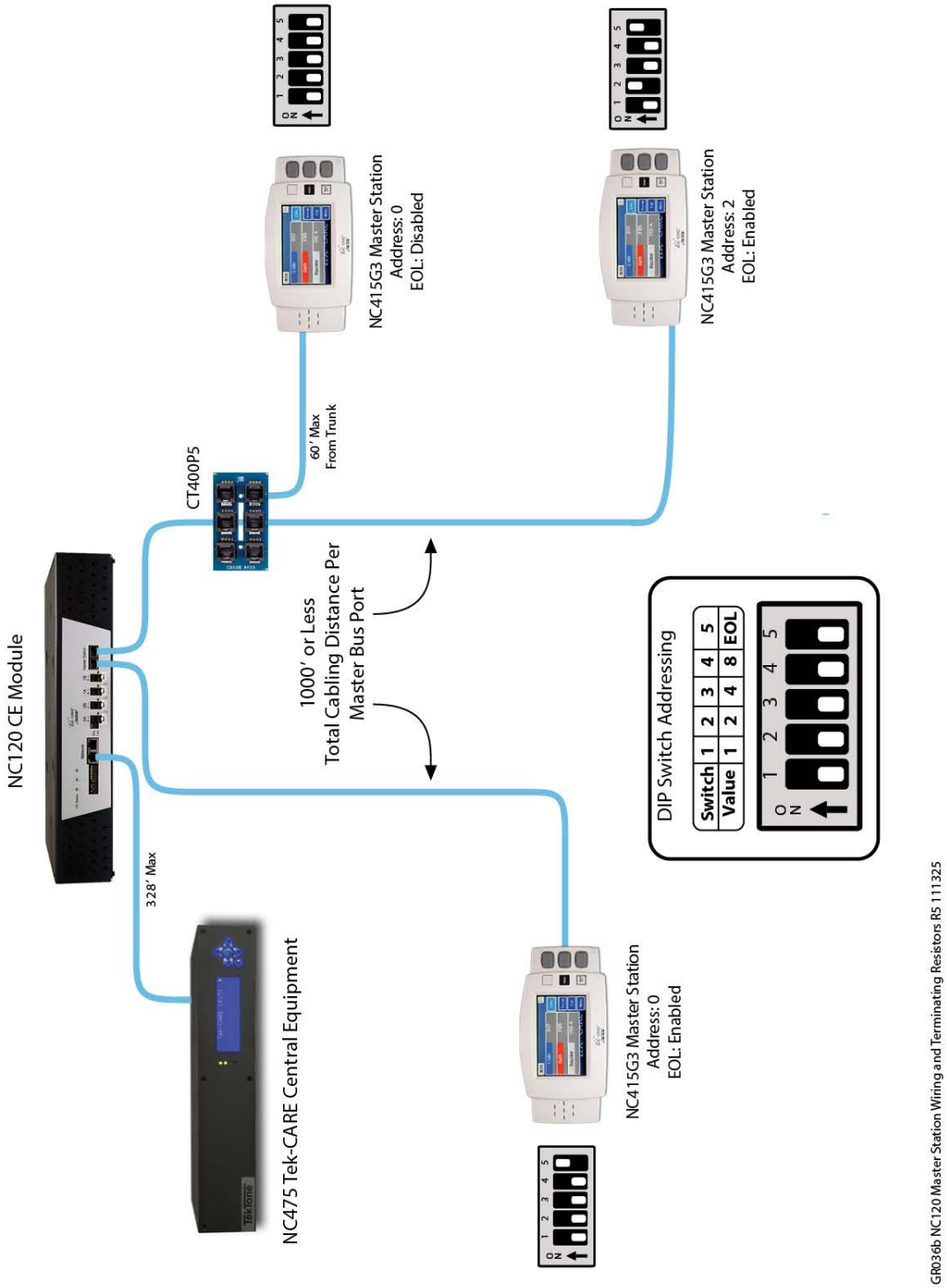

Copyright © TekTone Sound and Signal Mfg., Inc. All Rights Reserved

Master Bus Wiring

The maximum wiring distance for the Tek-CARE120 master bus is 1000' per port. Up to three NC415G3 Master Stations may be installed on each port, for a total of six master stations per NC120 CE Module.

To install multiple masters on one master bus trunk line, use CT400P5 splitters. Maximum tap length off of the main master bus trunk line is 60'. Ensure the last NC415G3 Master Station installed on the master bus must have the End Of Line resistor enabled. Turn on DIP Switch 5 to enable the internal EOL resistor.

Wiring Installation

Tek-CARE120 Data Bus Wiring

The main wiring for the Tek-CARE120 system consists of a two-wire communications data bus. The data bus ports on the front of the NC120 CE Module are capable of supporting 16 room controllers each, for a total of 64 controllers per CE module. Note that each port is capable of driving up to 1,000' of cable for the data bus. TekTone recommends 18/2 stranded cable for the data bus, but other types of wiring are acceptable. See the table below for details.

> **NOTE:** If 22 AWG cable is used, the data bus runs can be extended by twisting conductors together at each splice. For example, 22/4 cable used for data bus wiring could have two conductors twisted together for the positive leg of the data bus and two conductors twisted together for the negative leg.

	16 Controllers Max	12 Controllers Max	8 Controllers Max	8 Controllers Max
18 AWG Cable	1000'	1000'	1000'	1000'
20 AWG Cable	625'	800'	1000'	1000'
22 AWG Cable	350'	525'	750'	1000'
2 x 22 AWG Cable	775'	1000'	1000'	1000'
CAT6/CAT5e with CT160	1000'	1000'	1000'	1000'

> **NOTE:** Use CAT6 cabling for new installations, CAT5e cabling for retrofit.

Run wiring from room controller to room controller and connect the room controllers to the data bus in parallel using T-taps. Connect the positive wire in the data bus cable to the solid white wire (pin 13) on the back of the room controller, and connect the negative wire from the data bus to the black wire (pin 14) on the room controller.

CAT6/CAT5e Cabling Option

The CT160 can be convenient for wiring from a module to room controllers. From the NC120 CE, connect the CT160 two-wire pigtail to the data bus on the port. Refer to the wiring diagram below. The CT160 can either be installed as a standalone with the mounting hardware (CT160K), or it can be snapped into the back of LI132 Dome Lights and/or LI122UN/PM120 Room Controllers. Once installed, run or reuse CAT6 cable plugged into the CT160 and out to each dome or module. Refer to **Figure 8 on page 18** to note the positive and negative connections.

> **NOTE:** Test CAT6/CAT5e connections and meter cables for shorts and wiring mistakes to avoid issues later.

Copyright © TekTone Sound and Signal Mfg., Inc. All Rights Reserved

Figure 6 - CT160 Connections

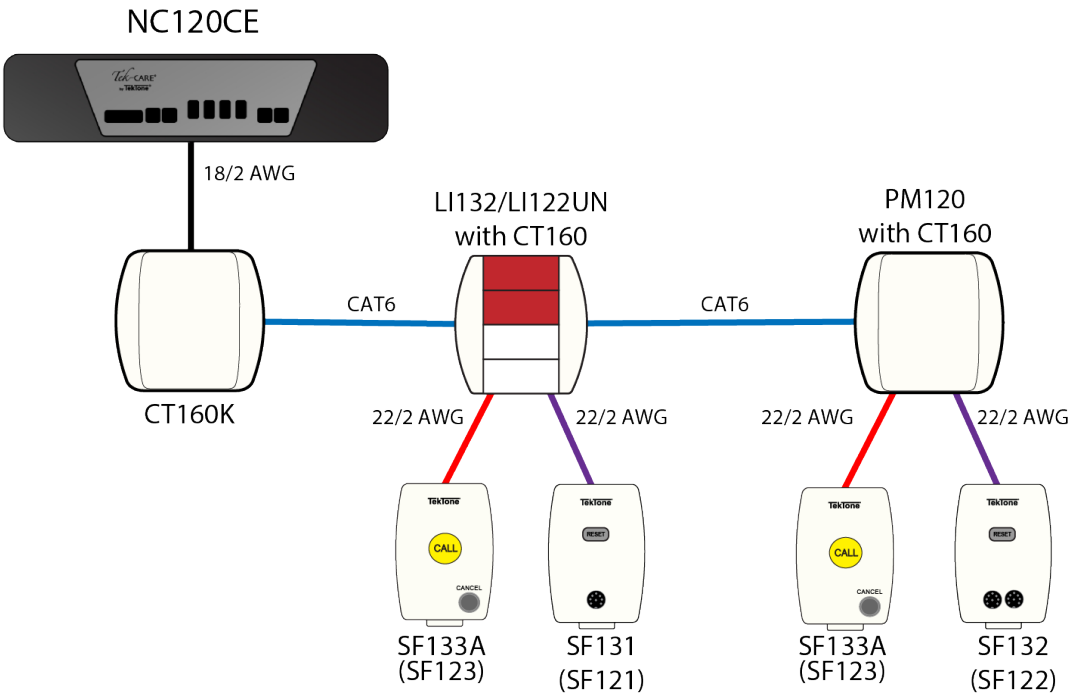

GR010 Wiring for TC120 with CT160 R5 071426

Addressing Room Controllers and Default Behavior

The Tek-CARE120 system is designed to be simple to install. As such, the room controllers are designed so that a basic system can be brought online with minimal programming.

Each room controller must be addressed to communicate on the data bus using the five position DIP switch found on the back of the room controller. Available addresses are 0-31.

When assigning addresses to the room controllers, keep in mind which port the room controller is connected to. For purposes of addressing, the two left data bus ports are 0A and 0B and the two right data bus ports are ports 1A and 1B. This means that addresses for room controllers connected to port 0A and port 0B must be unique, but port 0A and port 1A may have addresses duplicated between them.

Keep detailed notes of the physical addresses and locations of room controllers installed in the facility using the worksheet in the back of this manual. Without adequate installation notes, system configuration will be extremely time consuming.

> **NOTE:** No terminating jumper or resistor is required on the data bus. If necessary, the data bus may also be installed using a star topology. Do not exceed 1,000 feet of cable on any one data bus port.

The address assigned to the room controller also influences the default behavior of the room controller. If a controller is addressed as 0-29, the system assumes that the controller will be installed in a single bed configuration. This is useful for simple one-to-one installations. Room controllers addressed as 30-31 are defaulted to duty station behavior. These default behaviors are modified during configuration setup if needed.

Copyright © TekTone Sound and Signal Mfg., Inc. All Rights Reserved

Connect Stations

Up to six stations may be connected to each room controller using the header on the back of the room controller. The leads on the header are paired together to form a point on the room controller. This means that each header has six points to connect stations to, and one point for data bus connections.

With the wire leads on the connector pointing down, point 1 is on the left. The illustration below shows the six available points on the header. The point connections are arranged +-, +-, etc., with each group of +- connections making up one point. Refer to the following figures for default connection points.

> **NOTE:** Room controllers sold prior to warranty number N6861530 (April 2017) were supplied with Red and Red/White wires for Point 2 and Blue and Blue/White wires for Point 3 of their station connection header.

Figure 7 - Points Table

Point 1		Point 2		Point3		Point 4		Point 5		Point 6		Data Bus (LI132/LI122 Only)	
+	-	+	-	+	-	+	-	+	-	+	-	+	-
Purple	Purple White Stripe	Blue	Blue White Stripe	Red	Red White Stripe	Orange	Orange White Stripe	Brown	Brown White Stripe	Green	Green White Stripe	White	Black

GR041 Points Table R2 061726

Figure 8 - Single Patient Station Default Room (Address 0-29)

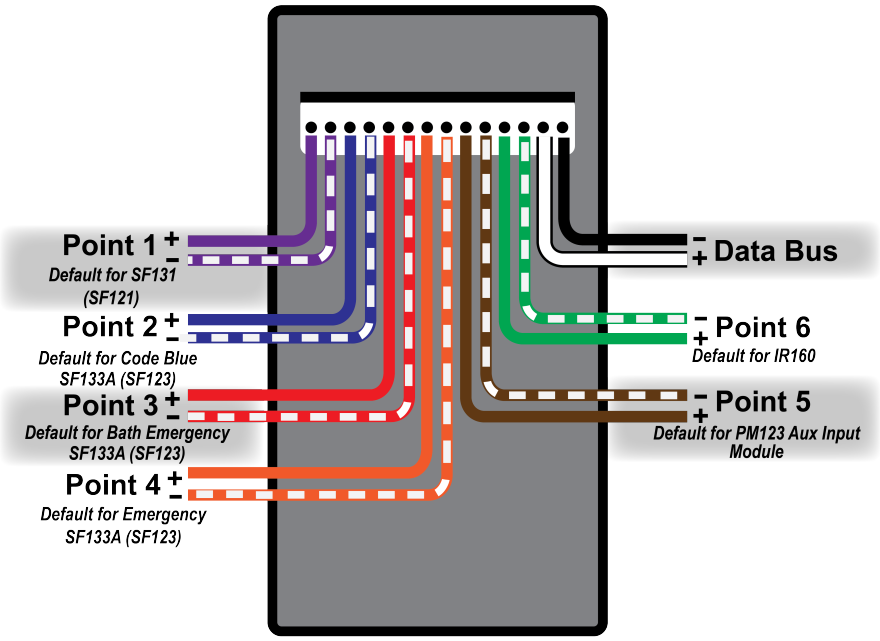

GR018 LI122 Single Patient Station Default Room Controller Points R3 071426

Copyright © TekTone Sound and Signal Mfg., Inc. All Rights Reserved

Figure 9 - Double Patient Station Default Room (Address 0-29)

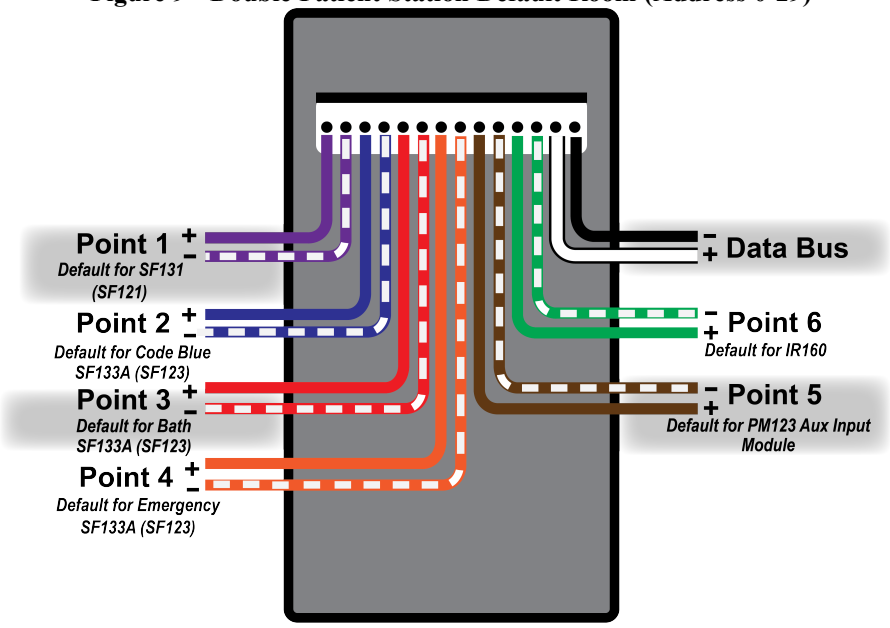

GR019 LI122 Double Patient Station Default Room Controller Points R3 071426

Figure 10 - Duty Station Default Room Controller Points (Address 30-31)

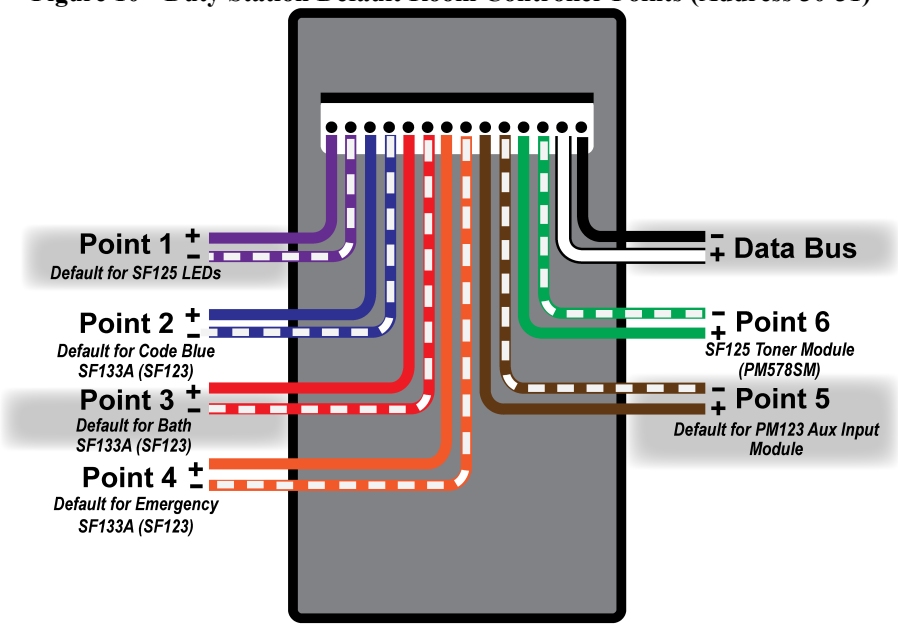

GR020 LI122 Duty Station Default Room Controller Points R3 021626

Tek-CARE120 Station Wiring

When installing wiring to stations, use 18-22 AWG cable. Do not exceed 100 feet of cabling for SF131/SF121, SF132/SF122, and SF133A/SF123 stations. For SF125 stations, do not exceed 50 feet of

Copyright © TekTone Sound and Signal Mfg., Inc. All Rights Reserved

cabling. Only one station may be connected to each point. Do not splice multiple stations together on the same point wiring.

One-to-One Installations

In most installations, one room controller will be used as a connection point for all of the stations in the associated room. This provides the simplest software configuration option, but other installation strategies are available. Keep detailed notes of which input stations are connected to the points of each room controller using the programming sheet provided in the back of this manual.

In a one-to-one installation, connect the stations to the room controller according to the table on the previous page.

Custom Installations

In other cases, a single room controller can be used to connect stations from multiple rooms or several beds in a ward-style installation. If stations are installed in this way, keep detailed notes that correlate the physical room the station is installed in and the DIP switch address of the room controller the stations are connected to. This information will be needed when creating the system configuration.

LI132/LI122UN LED Color Configuration

The LI132 Dome Lamp and LI122UN Room Controller have two switches for the LED colors of the dome light. Choose between red and white or blue and white LED options. The white LEDs are selectable for warm or cold hues. See the figure below for more details on the appropriate switch positions.

For high priority calls, choose either red and white or blue and white by setting the switch to the left for red or to the right for blue. For low priority calls, the white LEDs can either have warm or cool hues selected by setting the switch to the left for warm or to the right for cold.

> **NOTE:** Two slots are provided in the LI132/LI122UN plastic assembly to aid in separating the base from the lens. Please be careful not to insert a tool too far into the slot due to possible component damage.
>
> **NOTE:** When initially powering up the nurse call system system, the dome lights may start flashing slowly. This occurs when the LI132/LI122UN is updating its firmware and is normal operation. Once the update is complete, the domes will stop flashing.

Copyright © TekTone Sound and Signal Mfg., Inc. All Rights Reserved

Figure 11 - LI132/LI122UN LED Configurations

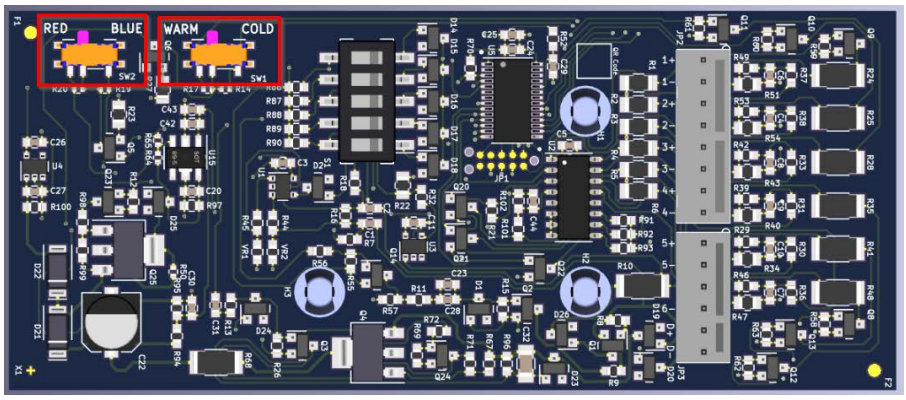

The default switch positions for the LI132/LI122UN are for red and cold.

IMPORTANT: Make sure to set the switch all the way over to one side or the other. Do not leave the switch in the middle between the two color choices. This can prevent either color LED from activating. If the switch is mistakenly set in the center, the LEDs will not show when calls are active.

The LED colors in the ConfigTool MUST match the color that has been configured on the LI132 Dome Lamp/LI122UN Room Controller.

Copyright © TekTone Sound and Signal Mfg., Inc. All Rights Reserved

Station Connection Instructions

SF131 Single and SF132 Dual Patient Stations: SF131 and SF132 stations are installed on 1-gang mounting rings or backboxes. Connect the red lead from the station to the positive terminal on the desired point of the room controller and connect the black lead to the negative terminal of the desired point on the room controller. If possible, connect the patient station to **Point 1 (Purple and Purple/White wires)**. This is the default connection point for patient stations in a single or dual bed installation. The SF131 and SF132 replace the legacy SF121 and SF122 Patient stations.

SF133A Water-Resistant Emergency Pull-Cord Station: SF133A stations are easily installed by mounting the rear bracket to the mounting surface, then snapping the station onto the bracket. Programmable button caps are included with each SF133A (CALL, EMERG, CODE, RESET, ROUND, and CHECK-IN). Select the desired button cap and snap it onto the station button. See illustration below.

Figure 12 - SF133A Button Cap Install

If using the pull cord, install it before mounting the station. See the illustration below for pull cord installation method, or visit **www.tektone.com/pull-cord-attachment-method** to view a short installation walk-through.

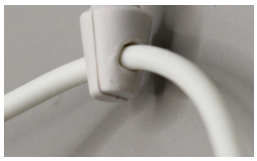

Insert pull cord through station plunger.

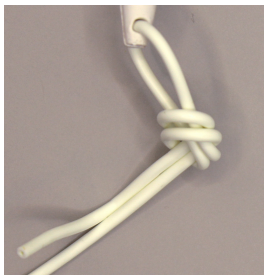

Tie both ends of the cord in an overhand knot.

Slide the knot into a close position under the plunger.

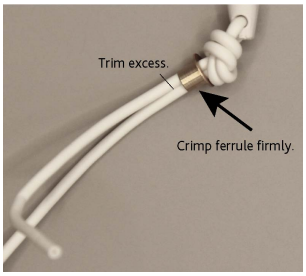

Thread both ends of the cord through the ferrule, and crimp firmly. Trim any excess cord.

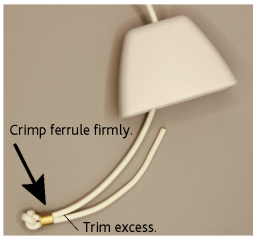

Copyright © TekTone Sound and Signal Mfg., Inc. All Rights Reserved

Pass the pull cord through handgrip, followed by the ferrule.	**Tie a tight overhand knot near the end of the cord.**	**Pass the loose end of the cord through the ferrule, crimp the ferrule, and trim the excess cord.**

If the SF133A is used in wet or humid locations, the SF133GK Gasket Kit ***must*** be installed with the SF133A to provide a proper seal. Peel the backing off of the double-sided tape on the smaller gasket and affix it to the inner part of the backplate as shown below. Then, affix the larger gasket to the mounting surface before installation of the backplate. Install the backplate over the gasket, then snap the station onto the backplate. See illustration below.

Figure 13 - SF133GK Gasket Kit Install

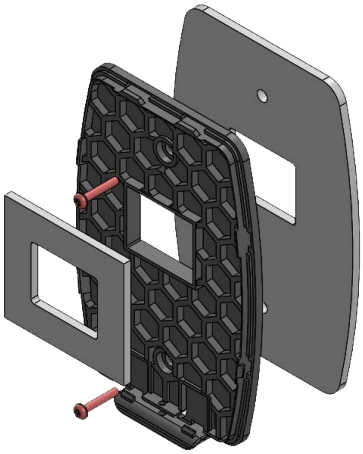

If the SF133A is used in dry locations, the SF133GK Gasket kit is not needed. Simply install the rear bracket onto the mounting surface using the two screw holes in the bracket, then snap the station onto the bracket.

- To use an SF133A as a **Code Blue** switch, connect it to **Point 2 (Blue and Blue/White)** on the addressable station.
- To use an SF133A as a **Bath Emergency** switch, connect it to **Point 3 (Red and Red/White)** on the addressable station.
- To use an SF133A as an **Emergency** switch, connect it to **Point 4 (Orange and Orange/White)** on the addressable station.
- If a custom call type is desired, note which point the SF133A station is connected to using the worksheet in the back of this manual. This information will be used during configuration setup.

When retrofitting to existing plaster rings or electrical boxes, the IH131/2 SF130-series Adapter Plates mount to a 2- or 3-gang plaster ring or masonry box, allowing for easy retrofit install of SF130-series stations. The IH131 and IH132 are mounted on the plaster ring or box, and the mounting plate for the SF130-series station is installed on the IH131/2. The station then snaps onto its mounting plate for simple installation. See the following page for illustration.

Copyright © TekTone Sound and Signal Mfg., Inc. All Rights Reserved

IH131 2-gang Install

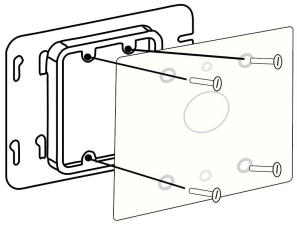

Line up the outer, counter-sunk holes on the adapter plate with the holes on the ring/box, and secure them with the included HW388 flathead screws.

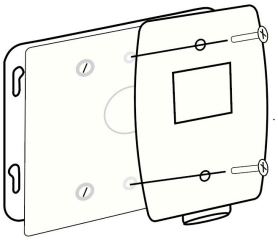

Once the plate is secured to the ring/box, use the middle holes to secure the mounting plate for the SF130-series station with the HW026 panhead device mounting screws (included with SF130-series stations).

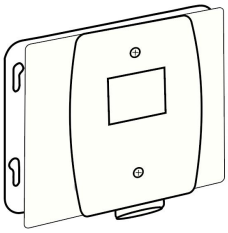

The adapter plate and station mounting plate will sit flush when installed correctly. Now, the SF130-series station can be easily snapped onto its mounting plate.

IH132 2-gang Install

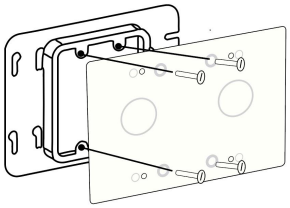

Line up the inner, counter-sunk holes on the adapter plate with the holes on the ring/box, and secure them with the included HW388 screws.

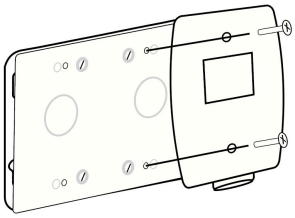

Once the plate is secured to the ring/box, use the middle, smallest holes to secure the mounting plate for the SF130-series stations with the HW026 device mounting screws (included with SF130-series stations).

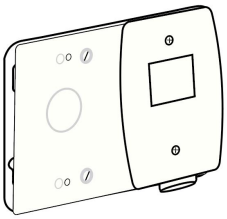

The adapter plate and station mounting plate will sit flush when installed correctly. Now, the SF130-series station can be easily snapped onto its mounting plate.

IH132 3-gang Install

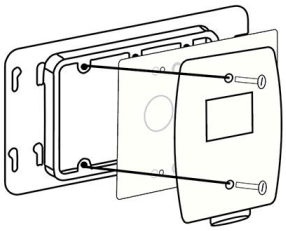

Use the HW026 screws (included with SF130-series stations) to secure both the IH132 adapter plate and the SF130-series mounting plate to the ring/box. The screws will pass through the holes of the SF130-series station mounting plate, then the outermost holes on the IH132, to secure to the 3-gang ring/box. In this use-case, the HW388 screws included with the adapter plates will *not* be used.

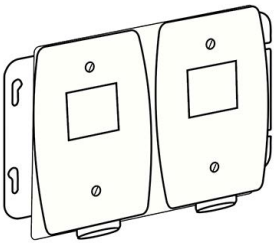

The adapter plate and station mounting plate will sit flush when installed correctly. Now, the SF130-series station can be easily snapped onto its mounting plate.

Copyright © TekTone Sound and Signal Mfg., Inc. All Rights Reserved

SF123 Two-Button Pull-Cord Station: SF123 stations are installed on 1-gang mounting rings or back-boxes. Slide the desired call type insert into the slot on the front of the station. Snap the circuit board into the front bezel by spreading the face of the bezel while placing the circuit board into the retaining clips.

Figure 14 - SF123 Two-Button Pull-Cord Station

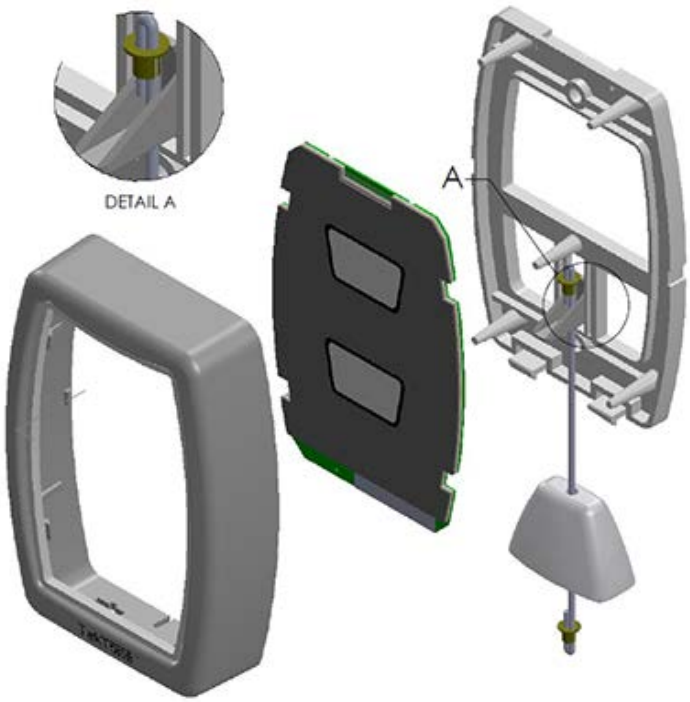

If a pull string is used, install the slider in the bracket with the flat side facing down as shown above. Push an end of the pull string though the hole in the slider contained on the bracket. Use the included brass ferrule to crimp onto the string. Trim the string to the appropriate length and insert it through the hole in the plastic handle. Crimp the remaining ferrule onto the string below the handle. Install the rear bracket on the wall or junction box using the two screw holes in the bracket.

> **NOTE:** Push the slider up into the retaining nibs on the rear bracket. Failure to push the slider up and secure it will result in station damage during installation.

Connect the red lead on the station to the positive terminal of the desired point on the room controller and connect the black lead to the negative terminal of the desired point on the room controller. If possible, connect the SF123 stations to points 2-4. These are the default connection points for SF123s in a single or dual bed installation.

- To use an SF123 as a **Code Blue** switch, connect it to **Point 2 (Blue and Blue/White)** on the room controller.
- To use an SF123 as a **Bath** switch, connect it to **Point 3 (Red and Red/White)** on the room controller.
- To use an SF123 as an **Emergency** switch, connect it to **Point 4 (Orange and Orange/White)** on the room controller.
- If a custom call type is desired, note which point the SF123 station is connected to using the worksheet in the back of this manual. This information will be used during configuration setup.
- If an SF123 is to be used as a Check In/Reset station, connect it to any unused point of the room controller. Be sure and note the point that it is connected to, so it can be correctly programmed during configuration setup. For more information about check in, see **Check In on page 37**.

Copyright © TekTone Sound and Signal Mfg., Inc. All Rights Reserved

SF125 Duty Station: SF125 stations are installed on 2-gang or 3-gang mounting rings or backboxes. Connect the red lead from the SF125 LED panel to the positive terminal of the desired point on the room controller and connect the black wire to the negative terminal of the desired point on the room controller. **Make sure the wires from the toner module and the data/LED module are not wrapped around each other**. This may cause data issues.

Connect the SF125 Toner Module to a separate point on the same room controller. Connect the **+12V** post to the positive terminal of the desired point, and connect the **Return** post to the negative terminal of the desired point on the room controller.

If possible, connect the SF125 LED panel to **Point 1 (Purple and Purple/White wires)**, and the toner module (PM578SM) to **Point 6 (Green and Green/White wires)**. These are the default point connections for a room controller set up with the duty station preset.

SF120-Series Vandal/Psychiatric Stations: SF120-series Vandal stations are installed on a single-gang ring with a dual-gang box. Connect the red lead from the station to the positive terminal on the desired point of the addressable station and connect the black lead to the negative terminal of the desired point on the addressable station.

NOTE: These devices require grounded backboxes. This is critical for protection against electrostatic discharge (ESD).

NOTE: Consider additional depth required for cable connectors.

Figure 15 - SF120-series Vandal/Psychiatric Connections

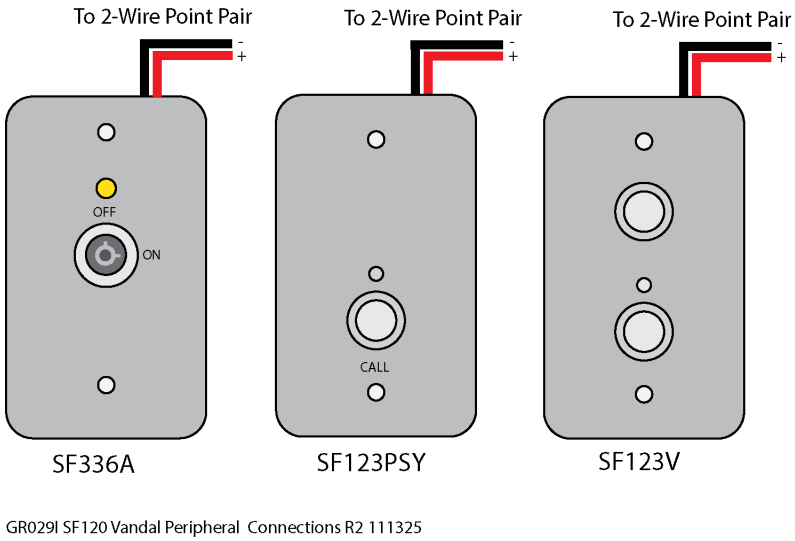

Copyright © TekTone Sound and Signal Mfg., Inc. All Rights Reserved

PM123 Auxiliary Input Module: Remove the top cover from the PM123 case. Inside, note the PM123 harness and six wires. Connect the wiring from the room controller and switches to the PM123 Module. Connect the positive terminal of the desired point on the room controller to the **Send** terminal, and connect the negative point of the desired point to the **Return** terminal. If possible, connect the PM123 Module to point 5, which is the default connection point for the PM123.

Connect the normally open dry contact to be monitored to **Contact 1** or **Contact 2**. There are three available functions for the PM123 in the ConfigTool, **Aux Input 1** (with **A** and **B** sides), **Aux Input 2** (with **A** and **B** sides), and **Aux Check In**.

Note that **Contact 1** will appear as **Aux Input 1A** or **Aux Input 2A** in the ConfigTool software depending on the function selected. **Contact 2** will appear as **Aux Input 1B** or **Aux Input 2B.** Aux inputs are non-latching by default, but can be configured to be latching within the LS450 ConfigTool Software.

Figure 16 - PM123 Connections

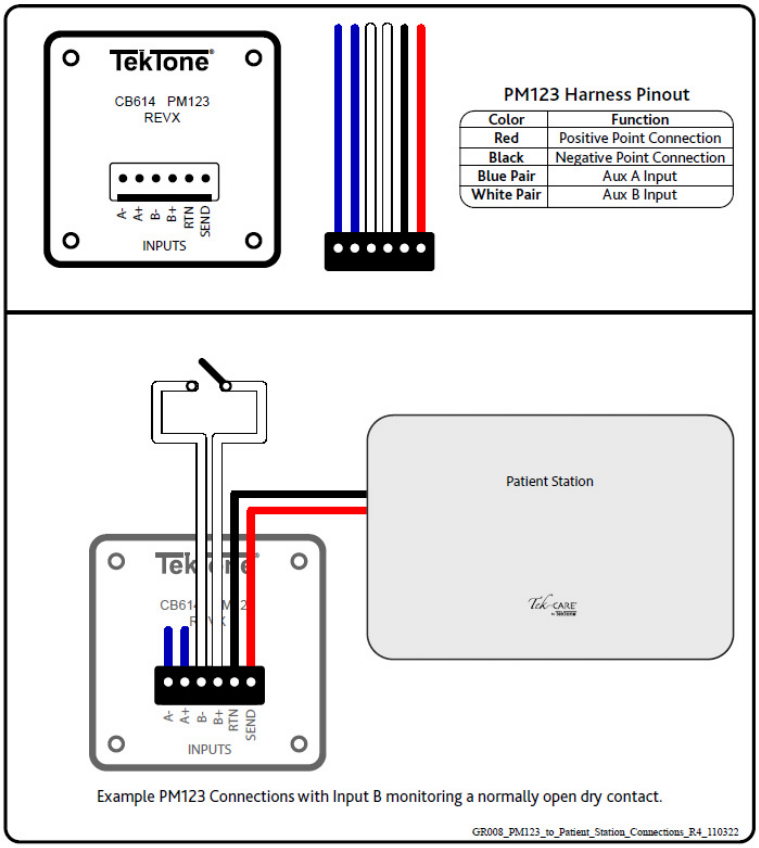

The PM123 may also be used as a check in device. If a normally open dry contact is connected to **Contact 1**, and the contact is closed at any point during the check in window, the check in requirement will be satisfied. If a device such as a motion detector or pressure pad is used for check in, connect the output from the device to **Contact 1**.

If a normally open dry contact is connected to **Contact 2** and changes state at any point during the check in window, the check in requirement will be satisfied. This is useful if a door contact switch is to be used for check in. In this instance, if the switch is closed at the start of the check in period, opening the switch at any point during the check in period will satisfy the check in requirement.

For more information about check in, see **Check In on page 37**.

Copyright © TekTone Sound and Signal Mfg., Inc. All Rights Reserved

SF126DC Dry Contact Output Module: The N.O. Dry Contact Module provides a two-pin header for a relay/device connection and another for the station connection. Upon initiation it will provide one of four programmable output behaviors; from the master station, either a 5-second on or a toggle on/off output, or at the station, a local or zone output.

The SF126DC can be mounted individually or with another SF120 peripheral, depending on the application. Use applications for the SF126DC may include:

- Triggering an input on a security alarms panel for offsite monitoring
- Activating strobes and sirens
- Activating pre-recorded messages on 3rd-party equipment

Figure 17 - SF126DC Connections

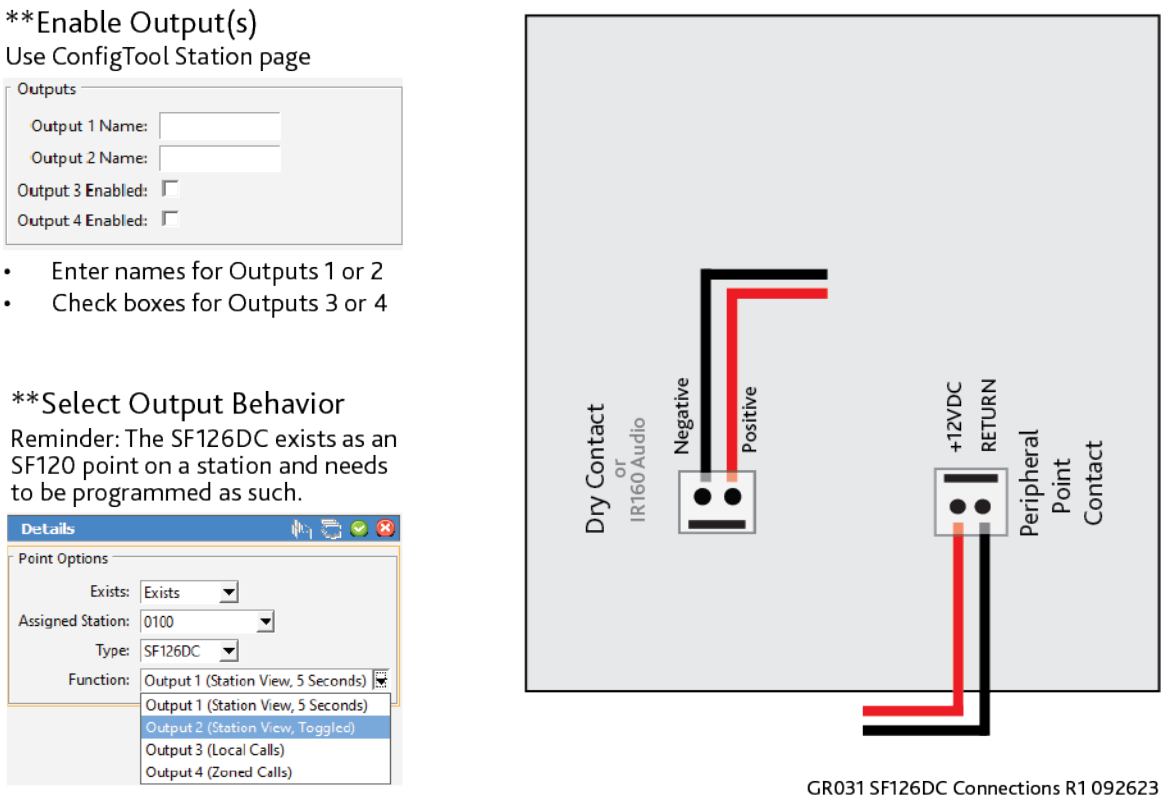

Copyright © TekTone Sound and Signal Mfg., Inc. All Rights Reserved

Connect NC415G3 Master Stations

The two 8P8C jacks on the right side of the NC120 CE Module are the connections for the NC415G3 Master Stations. Each jack supports three NC415G3 Master Stations with no more than 1,000 feet of CAT5e or better cabling on the run. Wire the 8P8C connectors for the NC415G3 Master Stations according to the T568B standard.

To connect more than one NC415G3 Master Station to each port, use a CT400P5 splitter at any point along the master station cabling run.

Figure 18 - T568B Standard Wiring

8P8C Pin #	Wire Color (T568B)
1	White/Orange
2	Orange
3	White/Green
4	Blue
5	White/Blue
6	Green
7	White/Brown
8	Brown

GR040 T-568B Pinout R0 072221

Much like room controllers, each NC415G3 Master Station must also be assigned a unique address (**0**, **1**, **2**, **3** or **4**) using the DIP switch on the rear of the master. The NC120 CE Module will automatically assign a master name (e.g., 01M1) to each master. This name can be changed in the LS450 ConfigTool software.

Figure 19 - NC415G3 Master Station Connections

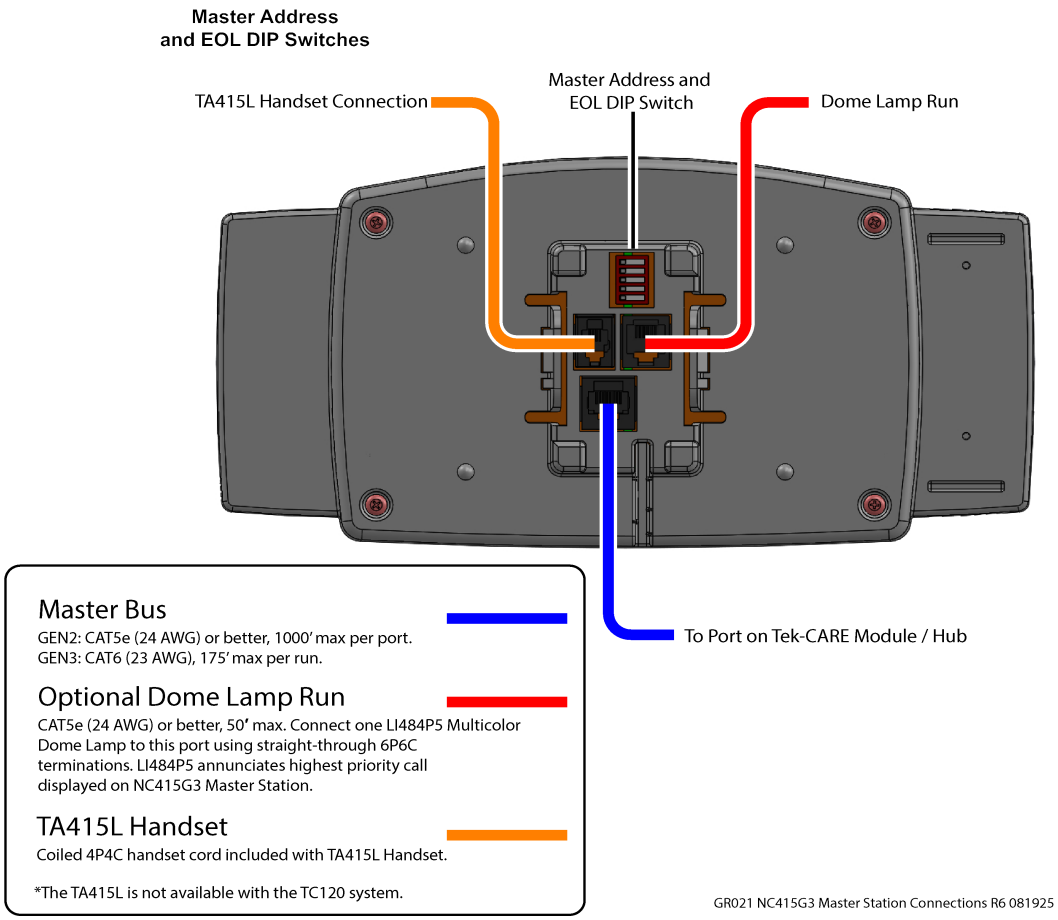

Up to six NC415G3 Master Stations may be connected to a single NC120 CE. Connect up to three masters to each 8P8C jack labeled master station on the front of the NC120 CE.

Copyright © TekTone Sound and Signal Mfg., Inc. All Rights Reserved

Multicolor Zone Dome

If desired, a zone dome light (part number LI132/LI122UN) may be connected to the NC415G3 Master Station using the 6P6C jack on the back. The zone dome light will illuminate whenever a call is present on the connected master station.

> **NOTE:** Using an LI494G3/LI484P5 reduces the maximum number of NC415G3s on the module.

Use CAT5e or better cabling to connect the LI132/LI122UN to the NC415G3 Master Station and wire the 6P6C with a straight-through configuration. Do not exceed 50 feet of cabling for dome light connection.

Connect Data Bus Wiring

Before connecting the data bus wiring to the NC120 CE Module, check the data bus wiring for shorts. Connect the positive wire in the data bus cable to the positive terminal on the NC120 CE Module port and the negative wire in the data bus cable to the negative terminal on the NC120 CE Module using the included plugs.

Note which station run gets plugged into which CE module port. This information will be needed when setting up the system configuration.

Connect Master Bus Wiring

Connect the master bus cabling to the ports on the right side of the NC120 Central Equipment Module.

Keep a record of the locations of master stations and their automatically assigned names. Once the system is powered on for the first time, go to each master station on the system and touch the **Menu** button on the home screen, then touch the **This Master** button that appears. The top of the screen will display the default name of the master station. Note this information, as well as the actual location of the master station for use during system configuration.

If more than one NC415G3 Master Station is installed on a master bus run, use a CT400P5 splitter to provide multiple connections to a single master bus port. Set the EOL resistor DIP switch on the last NC415G3 Master Station on the cable run to ON as shown **on page 16**.

Networking Multiple NC120 CE Modules

If multiple CE modules are to be networked together, use the DIP switches on the face of the CE modules to set unique module IDs for each CE module as discussed in **The NC120 Central Equipment Module on page 12**. Once each CE module has been assigned a unique address, connect the CE modules to each other using the Ethernet jacks on the left side using CAT5e or better cabling terminated using 8P8C connectors using the T568B standard.

Maximum cable length is 100 meters (328 feet). Extend this distance by placing NC554/8 network switches every 100 meters. Use NC556 Fiber to Ethernet Converters to extend this distance up to 1,200 meters over a fiber optic connection.

Once the CE modules are networked together, connect the networked modules to the NC475 Server's TekCARE Network port, then proceed to the Configuration Setup section.

Copyright © TekTone Sound and Signal Mfg., Inc. All Rights Reserved

Configuration Setup

Once hardware installation is complete, set up the system configuration. The LS450 ConfigTool is used to configure the system, and is installed on a technician's laptop which is connected to the Tek-CARE Network.

To begin setting up the system configuration, ensure that the NC120 CE Modules are powered on, uniquely addressed, and networked together.

Connect the LS450 ConfigTool Programming Software

In order to connect to the NC120 CE Modules, the IP address of the computer used for programming must be on the same subnet as the NC120 CE Modules. Set the static IP of the laptop to be 192.168.1.125.

Next, connect a standard Ethernet patch cable between the programming computer and the networked CE modules.

About Points

The most important concept of the Tek-CARE120 system are the points on the LI132 Dome Lamp and LI122UN/PM120 Room Controllers. The points are the six physical connections on the rear of each controller, shown as points 1-6 in the configuration. In addition to the physical points, there are also two additional points present in the configuration, one for the red dome LED and one for the white dome LED.

By default, all of the room controller points are assigned to a Station ID in the ConfigTool. The physical address of the room controller determines which Station ID points are assigned by default. In the example below, notice that points 1-6 on the controller with **Address 0 on Port 0 of Module 1** are assigned to **Station 0100** by default.

Figure 20 - Points in the LS450 ConfigTool

Module : Port : Address	Point	Assigned Station	Exists
01:0:06	1 (Purple)	406	Detectable
01:0:06	2 (Blue)	406	Detectable
01:0:06	3 (Red)	406	Detectable
01:0:06	4 (Orange)	406	Detectable
01:0:06	5 (Brown)	406	Detectable
01:0:06	6 (Green)	406	Detectable

NOTE: In order to assign points on a single controller to multiple stations, an LS450 ConfigTool Plus or LS450 ConfigTool Elite license is required. These advanced licenses require training; for more information visit https://www.tektone.com/training/.

A Tek-CARE120 point can be in three states.

Detectable: When points are in the **Detectable** state, the central is constantly polling those points, searching for attached stations. If a station is detected, the system assumes that the station type conforms to the standards found in **Connect Stations on page 18**.

Exists: If a point is marked as **Exists**, the point is supervised and the system assumes that a station is connected to that point. If a station goes missing or is not detected, a fault will annunciate for that point.

Disabled: If a point is marked as **Disabled**, the system does not look for station attachment at the point.

Copyright © TekTone Sound and Signal Mfg., Inc. All Rights Reserved

Configuration Methods

There are two ways to set up a Tek-CARE120 configuration. The first and simplest method requires stations to be wired to the room controllers as shown in **Connect Stations on page 18**. If all stations are connected to their room controllers on the default points, then the room controllers and stations installed on the system can be automatically detected and put into use. The only required programming in this instance is system customization. This scenario will be referred to as an **Autodetect Setup**.

The second method is used when custom wiring is required because multiple stations that create the same type of call are connected to a single room controller. Custom wiring scenarios include facilities that have three or more beds per room (requiring multiple SF131/SF121 Single Patient Stations and/or SF132/SF122 Dual Patient Stations per room) or in an area where two or more Code Blue or Emergency switches are connected to the same room controller. This scenario will be referred to as a **Custom Setup**.

> **NOTE:** Custom Tek-CARE120 installations require a **Plus or Elite** license for the LS450 ConfigTool. These advanced licenses require training; for more information visit https://www.tektone.com/training/.

Please refer to IL855 LS450 ConfigTool manual, or IL1150 LS450 ConfigTool 2 manual for more information and further instruction on how to use the LS450 ConfigTool.

Configure an Autodetect Configuration

Before beginning system programming, perform a complete test of the system. Ensure that calls annunciate at the expected LI132 Dome Lamps/LI122UN Room Controllers and that call type annunciation from SF133A Water-Resistant Emergency Pull-Cord Stations/SF123 Customizable 2-Button Pull-Cord Stations are correct.

Start the LS450 ConfigTool software. On the splash screen, choose the IP address of the Tek-CARE120 system on the left and select **Load Configuration from System** on the right. The default configuration will be loaded into the LS450 ConfigTool software.

Figure 21 - Config Tool Splash Screen

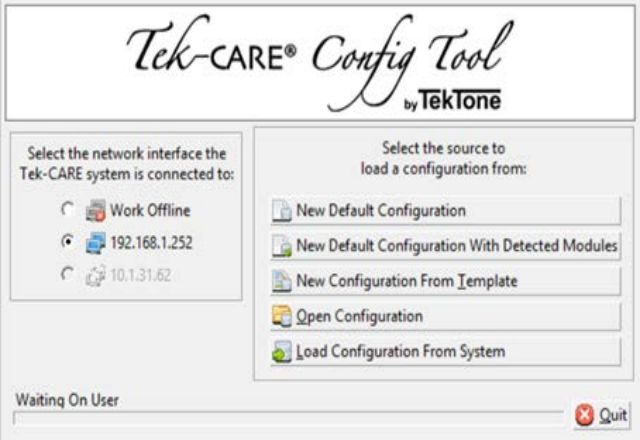

Next, choose **File→Save Configuration As**, choose a descriptive file name, and save the configuration.

Enabling and Naming Modules

Navigate to the **Modules** page. In the **Modules** list, verify that all of the installed NC120 CE Modules installed on your system are marked as existing.

Note that the number in the Modules list corresponds to the DIP switch address of the CE modules.

Copyright © TekTone Sound and Signal Mfg., Inc. All Rights Reserved

If desired, add **Location** for the module. To add a location for a module, select a module from the list, then select the **Edit** button to unlock the **Details** pane for editing. Type a location into the **Location** field, then select the **Apply** button.

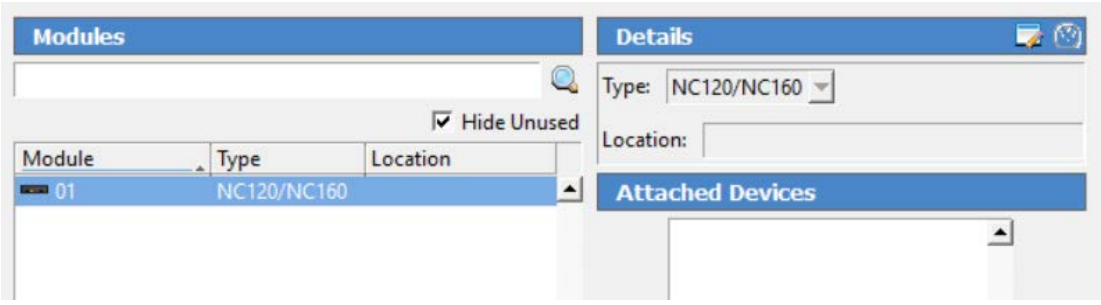

Repeat this process for each module installed on the Tek-CARE120 system. If an NC475 is installed, scroll to the bottom of the **Modules** list and enable the NC475.

Changing Station Names

Next, change the default station names to names that make sense for the facility.

> **NOTE:** The default station names are a combination of the CE module address, the port number that a room controller is connected to, and the DIP switch address of the room controller. The CE module address provides the first two digits of the default station name (01-75), and the address of the room controller provides the second two digits (00-63).

If the room controller is connected to port 0A or 0B, only the address of the room controller is used. If the room controller is connected to port 1A or 1B, add 32 to the address of the room controller to obtain the last two digits of the default station name.

For example, a room controller addressed as 12 connected to port 0A or 0B of CE 01 would be assigned a default station name of 0112. If the same room controller (address 12) were connected to port 1A or 1B of CE 02, it would be assigned a default station name of 0244.

Using the notes generated during system installation, change the default stations names to those desired by the facility.

Begin by selecting **Stations** in the page selection pane of the ConfigTool software. Choose the first station you wish to edit, then select the **Edit** button in the upper right corner of the **Stations** pane. The pane will unlock for editing.

Select the default station name and delete it. Type a new name in its place, then select **Apply**.

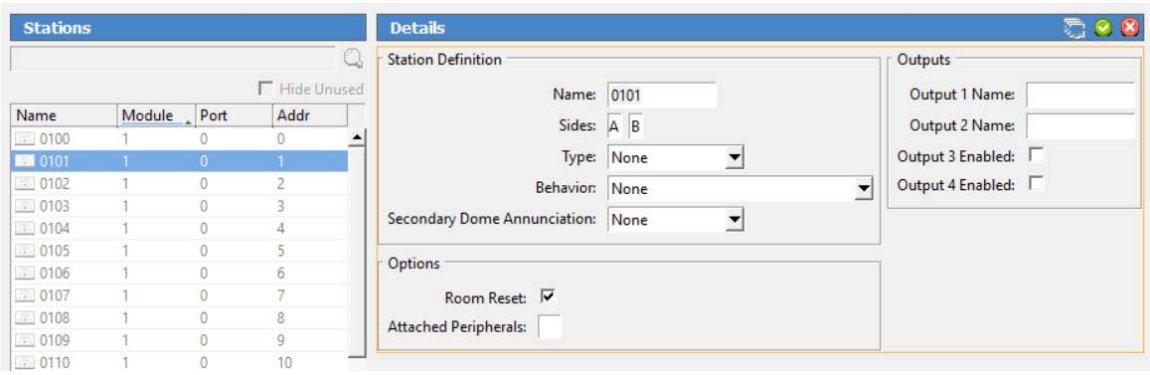

Repeat for all remaining stations to be customized.

Copyright © TekTone Sound and Signal Mfg., Inc. All Rights Reserved

Edit Stations

Occasionally, depending on system requirements, some changes will need to be made to the default stations. Most commonly, SF132s/SF122s may have been installed on point 1 of the facility's room controllers, PM123s may need to be set up as **Aux Input 1**, **Aux Input 2**, or **Aux Check In** functions using the Functions drop-down menu, or SF133As/SF123s may need to be programmed as reset buttons using the **Function** drop-down menu.

Select **Points** in the page selection pane of the ConfigTool. Select **Edit Multiple** in the details pane to open the **Edit Multiple** window.

Referring to the completed programming worksheet created during installation, select the stations to be edited. Choose a group of stations that are wired the same way. If there are multiple wiring configurations on the system, break the stations into groups, e.g., Wiring Configuration A, B, C, etc. Select all of the wiring configuration A stations and edit them, then select all of the wiring configuration B stations and edit them, etc. Once the edit multiple window is open, select the Station IDs to be edited.

Once stations are selected, enable the points that have stations connected and choose the correct station type and behavior. Mark any unused points as disabled.

Ensure that both the Red/Blue and White domes are marked as **Exists**. Select **LI132_R/LI122_R** if the room controller has red LEDs or **LI132B/LI122_B** if the room controller has blue LEDs. If the station must be set up as a duty station or a zone light, change the behavior of the red/blue and white domes to Red or Blue Zone Dome and White Zone Dome respectively. This will enable the Station ID to watch zones on the system and annunciate a call when needed.

> **IMPORTANT:** The LED colors in the ConfigTool MUST match the color that has been selected on the LI132 Dome Lamp/LI122UN Room Controller.

The **Single Bed**, **Dual Bed**, and **Duty/Zone** buttons at the bottom of the **Edit Multiple** window can be used to quickly set up the default station connection points.

Ensure that the **Assigned Station Exists** box is checked. This will automatically enable the Station ID selected and simplify future editing.

Copyright © TekTone Sound and Signal Mfg., Inc. All Rights Reserved

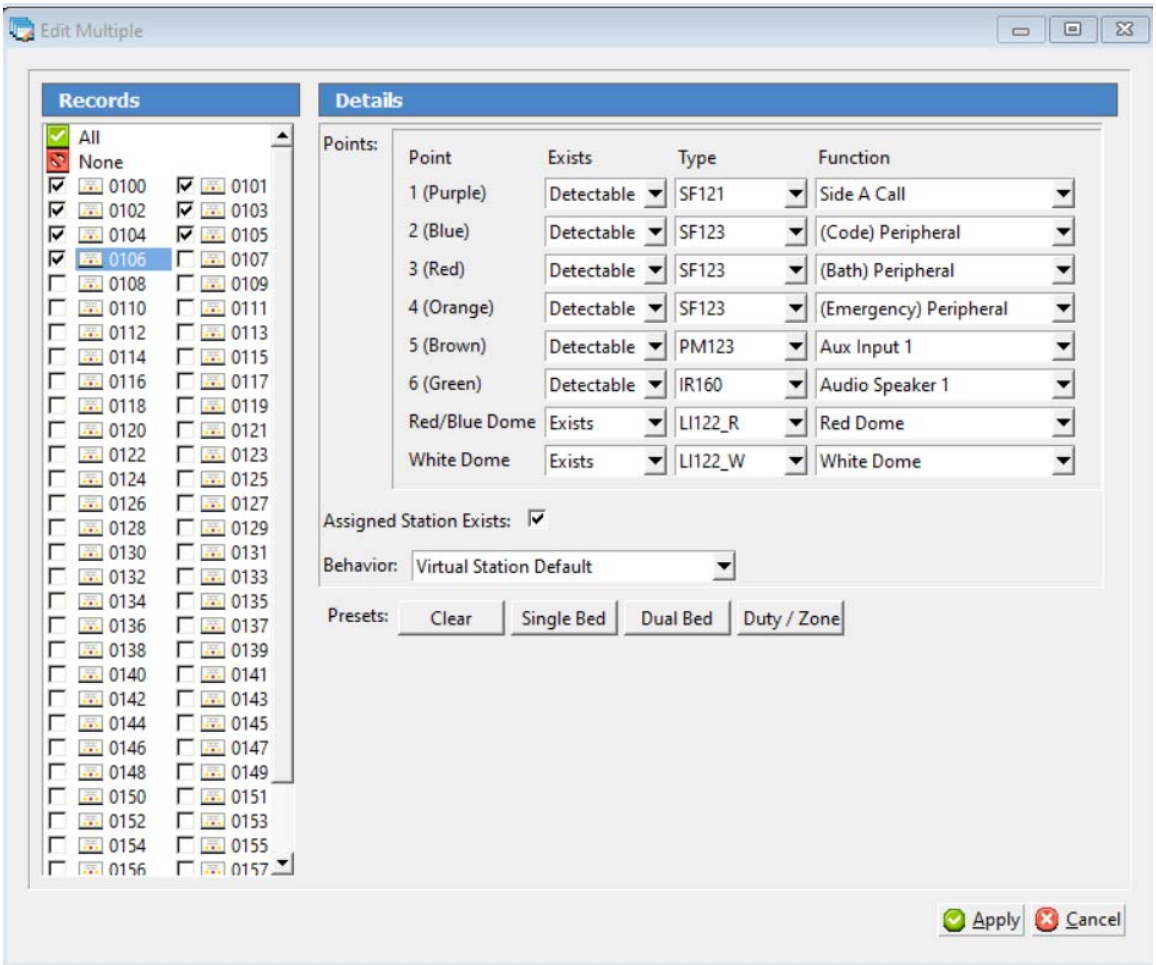

Once all selections have been made, select the **Apply** button. Repeat the edit multiple process for all wiring configurations.

Copyright © TekTone Sound and Signal Mfg., Inc. All Rights Reserved

Zoning Stations

To place stations in zones, select **Zones** in the page selection pane of the ConfigTool. Select a zone for editing, the select the **Edit** button.

Figure 22 - Set Up Zoning and Annunciation

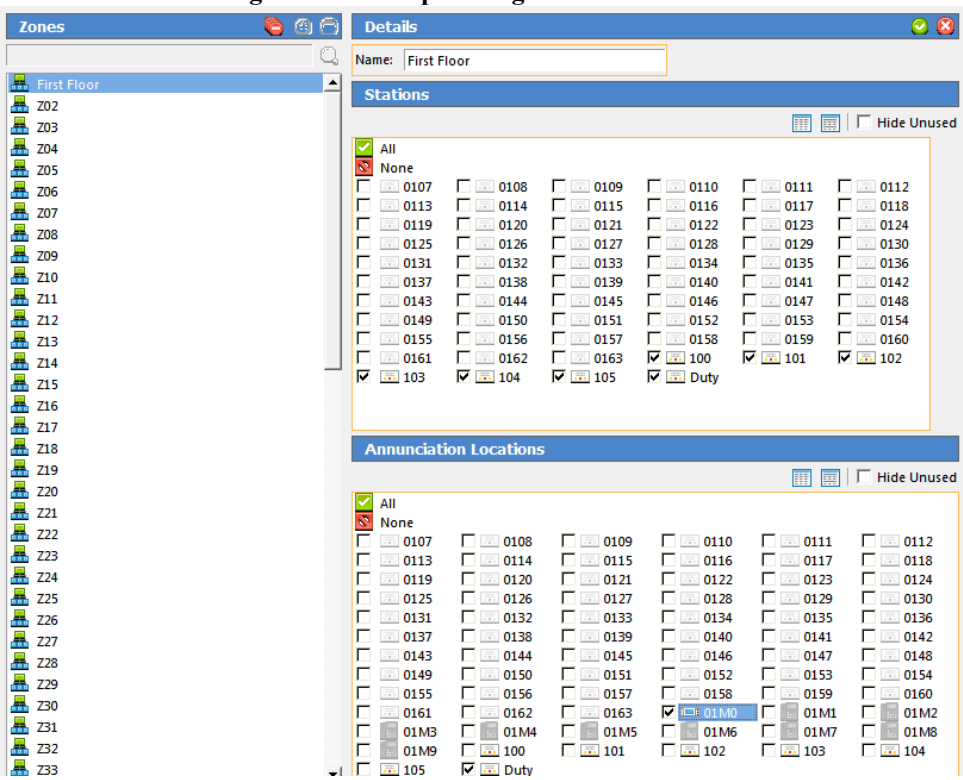

Rename the zone with a descriptive name that makes sense for the facility.

In the **Stations** pane, select the stations to be included in the zone.

In the **Annunciation Locations** pane, select where to annunciate the calls from the stations in the selected zone.

Select **Apply** to save the changes. Repeat for all zones required by the facility.

Room Level Reset

SF133A/SF123 stations can be programmed as **Reset Buttons** to enable the room level reset and check in features. With the SF133A/SF123 programmed as a reset button, the upper button on the station becomes inoperable. When the lower button is pressed, any calls annunciating from the same Station ID that the SF133A/SF123 Reset Button is assigned to will be automatically reset.

Copyright © TekTone Sound and Signal Mfg., Inc. All Rights Reserved

SF133A/SF123 Reset buttons are not automatically detected by the system on start-up. Refer to the **Edit Stations** section for information on setting up SF133A/SF123 Reset Buttons.

For example, an LI132/LI122UN connected to NC120 CE Module 1, Port 0, has its DIP switch address set as 0. By default, the dome light and all devices connected to that controller are assigned to the default station 0100. The table below shows the devices connected to the room controller.

	Point 1	Point 2	Point 3	Point 4	Point 5	Point 6
Device	SF132/SF122 Routine	SF133A/SF123 Code	SF133A/SF123 Bath	None	None	SF133A/SF123 Reset
Station	0100	0100	0100	0100	0100	0100

The **SF133A/SF123 Reset Button** will reset all calls from a station simultaneously. In the table above, if the SF132/SF122, SF133A/SF123 Code, and SF133A/SF123 Bath were all in alarm at the same time, a single press of the SF133A/SF123 Reset Button would reset all calls from Station 0100 simultaneously.

Check In

If the facility uses SF133A/SF123 stations set up as Check In/Reset stations or PM123 Aux Input Modules as **Aux Check In Devices**, check in times must be added to the system for the check in feature to function. A check in time is a time period during which the system expects to see a check in input triggered. If the check in input is not triggered during the scheduled time period, an Inactivity call annunciates on the system. Create several check in times so that each patient can be assigned a check in time that coincides with their normal waking schedule. Patients can also be assigned one check in time for weekdays and another for weekends. The table below illustrates some sample check in times.

Start Time	End Time	Week Days
5:00	6:00	SMTWTFS
6:00	7:00	SMTWTFS
7:00	8:00	SMTWTFS
7:00	8:00	MTWTF
8:00	9:00	S.....S

Create Check in Times

1. Select the **Check In** tab in the ConfigTool.
2. Select the **Add** button in the **Check In Times** area.
3. Using the 24-hour military time, enter a **Start Time** and an **End Time** in the **Details** area. Midnight is 0:00. Start and End times must be at least 10 minutes apart.
4. Use the checkboxes to select which days of the week this event is scheduled.
5. Select the **Apply** button.

   NOTE: A single time period cannot cross midnight into the next day. Divide it into two time period entries. For example, create these two entries to create a scheduled time period of 6:00 PM Friday to 10:00 AM Saturday:

Begin - 18:00	End - 23:59	Day - Friday
Begin - 0:00	End - 10:00	Day - Saturday

Copyright © TekTone Sound and Signal Mfg., Inc. All Rights Reserved

Editing NC415G3 Master Stations

If desired, the default names of the master stations (e.g., 01M1) can be changed to a more descriptive name. To do this, navigate to the **Masters** page in the LS450 ConfigTool.

With the master stations powered on, touch the **Menu** button on the screen of the NC415G3 Master Station. Select the **Info** button from the menu that appears, and note the device name (e.g., 01M1) that has been assigned to the master station.

Figure 23 - Master Configuration Page

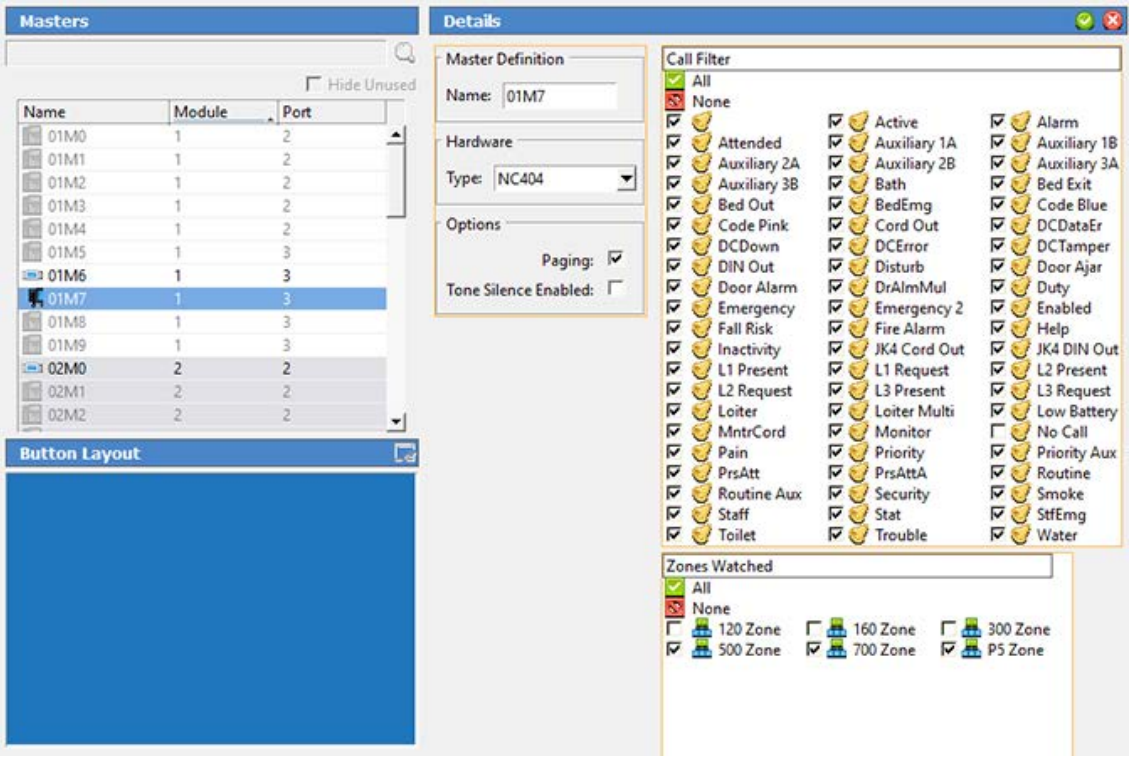

Select **Masters** from the page selection pane of the ConfigTool. In the list of masters that appears, select the master to be renamed.

Select the **Edit** button to unlock the **Details** pane for editing. In the details pane, give each master a unique descriptive name.

If desired, the details pane can also be used to set up call filtering and zones watched for the master. The **Call Filter** determines what call types the master station displays and the **Zone** filter determines which zone's calls annunciate on the selected master station. Choose **Tone Silence Enabled** to silence the tone for that master.

Once all changes have been made, select the **Apply** button.

Copyright © TekTone Sound and Signal Mfg., Inc. All Rights Reserved

Disable Detectable Points

Once basic setup is complete, disable the unused points on the system. This lightens the load on the NC120 CE Modules and allows for faster alarm transmission. If unused points are not disabled, the CE module will continuously poll all detectable points for station connection.

To disable all detectable points, select **Points** in the page selection pane of the ConfigTool. In the **Details** pane, select the gray **Disable All Detectable** button. A warning will appear noting that this action cannot be undone. Select **OK**.

For an autodetected system, configuration is now complete. Choose **File→Save Configuration** and then choose **File→Commit Configuration to System.**

Configure a Custom System

Use the following set of instructions to program the system if custom wiring is used.

Start the LS450 ConfigTool software. On the splashscreen, choose the IP address of the Tek-CARE120 system on the left and select **New Default Configuration** on the right. The default configuration will be loaded into the LS450 ConfigTool software.

Next, choose **File→Save Configuration**. Choose a descriptive file name, and save the configuration.

Refer back to **Configure an Autodetect Configuration on page 32** to enable and name modules and points.

Set up Room Controller Points

Once the modules have been edited, it is time to enable the points that the stations are connected to.

Refer to the completed programming worksheet that was created during system installation to ensure correct programming.

The most important concept to remember during system configuration is the relationship between points and Station IDs.

The most common scenario is a one-to-one association. For example, a room controller that has been given the address 1 on its DIP switches would be installed outside of room 101. Any stations in the room would be connected to the appropriate points on the rear of the room controller.

There are two steps for setting up points. First, edit each Station ID using the **Edit Multiple** window, then change station assignments if necessary.

Select **Points** in the page selection pane of the ConfigTool. Select **Edit Multiple** in the details pane to open the **Edit Multiple** window.

Referring to the completed programming worksheet created during installation, select the default stations to be edited. Select a group of stations that are wired the same way.

If there are multiple wiring configurations on the system, break the stations into groups, e.g., Wiring Configuration A, B, C, etc. Select all of the wiring configuration A stations and edit them, then select all of the wiring configuration B stations and edit them, etc.

Once the edit multiple window is open, select the Station IDs to be edited. Once stations are selected, enable the points that have stations connected and choose the correct station type and behavior.

Copyright © TekTone Sound and Signal Mfg., Inc. All Rights Reserved

Ensure that both the Red/Blue and White domes are marked as **Exists.** Select **LI122_R** if the room controller has red LEDs or **LI122_B** if the room controller has blue LEDs. If the station must be set up as a duty station or a zone light, change the behavior of the red/blue and white domes to Red or Blue Zone Dome and White Zone Dome respectively.

This will enable the Station ID to watch zones on the system and annunciate a call when needed.

The **Single Bed**, **Dual Bed**, and **Duty/Zone** buttons at the bottom of the **Edit Multiple** window can be used to quickly set up the default station connection points.

Ensure that the **Virtual Station Exists** box is checked. This will automatically enable the Station ID selected and simplify future editing.

Once all selections have been made, select the **Apply** button. Repeat the edit multiple process for all wiring configurations.

For information on room level reset, check in, editing stations, zoning stations, and disabling points refer back to **Configure an Autodetect Configuration on page 32**.

Secondary Dome Annunciation

If desired, calls from one station may be forced to annunciate on the dome light of another station. The dome light set up as the secondary annunciator must be on the same module as the primary annunciator.

To choose a dome light to serve as a secondary annunciator, navigate to the primary station in the **Stations** page. Select the desired secondary dome annunciation station from the drop-down menu.

Repeat for all remaining stations requiring secondary dome annunciations.

Move Points to Stations

Occasionally, it may be necessary to assign a point to a different station than it is defaulted to. To move points between Station IDs, select the point to be moved from the points list, then select the **Edit** button. From the assigned Station menu, select the Station ID and select the **Apply** button.

Editing Hardware Behaviors

By default, the Tek-CARE120 system generates Routine calls from SF131s/SF121s and SF132s/SF122s, and Code, Bath, Emergency, and Emergency 2 calls from SF133As/SF123s, depending on the function selected in the points list. PM123s will generate Aux Input 1 or Aux Input 2 calls by default.

To change the type of call generated, select **Behaviors** in the page selection pane of the ConfigTool. Select the **Edit** button in the **Details** pane to unlock it for editing.

The call types generated by various inputs on the system can be edited on the hardware page shown in **Figure 24 on page 41**. **Escalation** may also be set for SF131/SF121s and SF132/SF122s.

For PM123s, note that Aux Input 1 and Aux Input 2 calls follow the position of the monitored switch. When the normally open switch is closed, the selected call is placed, and when the switch opens again, the call automatically clears.

To program a PM123 with latching calls that must be acknowledged from a master station, use the selections for Aux Input 1A/1B Acknowledged. This will trigger a call when the switch closes, and the call will remain latched in the system until it is acknowledged, regardless of the position of the switch.

Note that any changes made to the **Virtual Station Default** behavior are global.

Select **Apply** once all edits are made.

Copyright © TekTone Sound and Signal Mfg., Inc. All Rights Reserved

If a single Station ID on the system requires different call types, create a copy of the **Virtual Station Default** behavior using the **Add Copy** button in the **Hardware Behaviors** pane. Choose a new name for the hardware behavior and edit the call types as desired. Select **Apply** to save the new hardware behavior.

To assign the new behavior to a Station ID, select **Stations** in the page selection pane. Select the Station ID that the new hardware behavior is to be assigned to and select the **Edit** button in the **Details** pane. Select the hardware behavior to be assigned to the station from the Behavior: drop-down list, then select **Apply**. Calls generated by the Station ID that was edited will now generate call types according to the assigned hardware behavior.

Figure 24 - Behavior Details

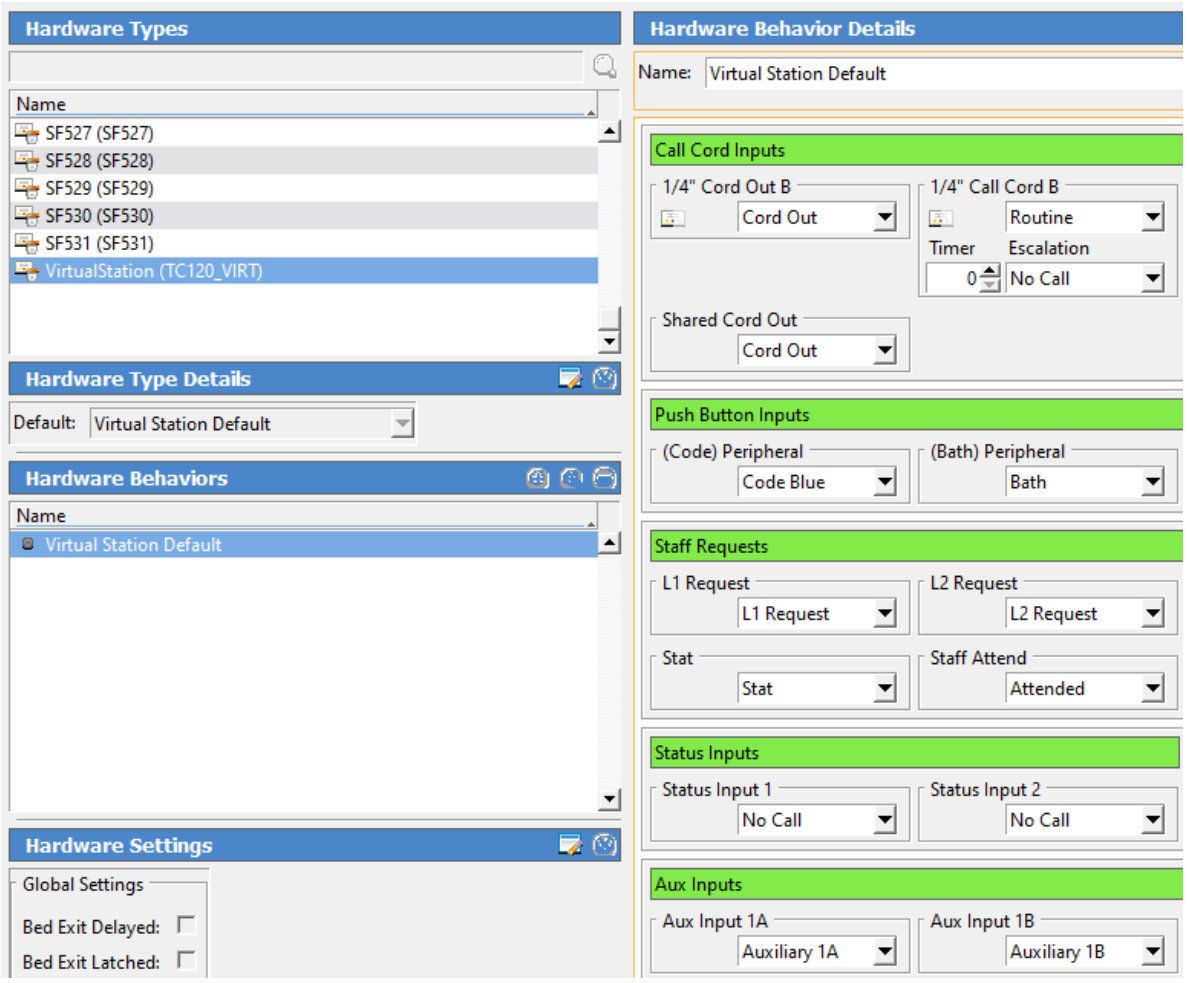

Copyright © TekTone Sound and Signal Mfg., Inc. All Rights Reserved

Edit Call Types

For most installations, the standard call types will not require editing. However, installations utilizing LI132/LI122UN Dome Lights must modify any call types used in the facility to ensure proper annunciation.

Figure 25 - Call Types List

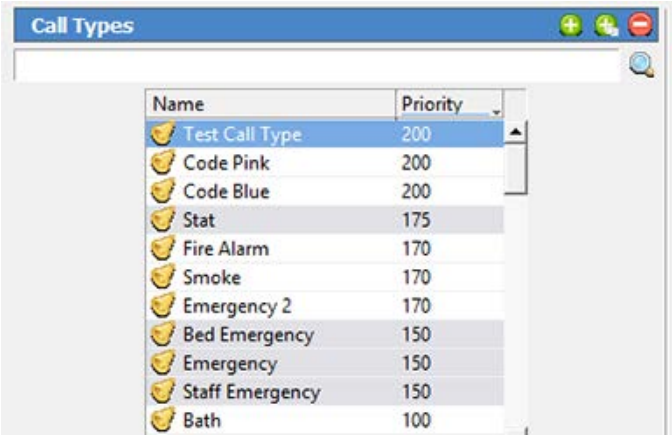

Select the call type to modify from the **Call Types** list shown above and select the **Edit** button.

Figure 26 - Dome Light Color Selection

In this section, the Blue selection determines the flash rate of the blue LED on all LI122UNs. The Red selection determines the flash rate of the red LED on all LI122UNs. In this example, we are editing the dome light annunciation for the Emergency call type. Note that the settings shown above would result in a medium flash rate on the red LED of LI122UNs zoned to display the Emergency call, however, any LI122UNs zoned to display the call would not annunciate the Emergency call, since the selected flash rate is **Off**.

Choose the appropriate annunciation settings for the selected call type, then select **Apply**. Choose **File→Save Configuration** before proceeding.

> **NOTE:** If dome light annunciation colors are altered, perform a careful walk-through test of the dome light annunciation to ensure that the correct lights illuminate for the desired call.

Copyright © TekTone Sound and Signal Mfg., Inc. All Rights Reserved

Using the Tek-CARE120 System

Placing and Resetting Calls

Residents may place calls on the Tek-CARE120 system by pressing the call button on SF131/SF121 and SF132/SF122 stations, or by pulling the call cord or pressing the call button on as SF133A/SF123 station. When a call is placed, the red LED on the face of the station will flash.

When a call is placed, the call annunciates on the LI132 Dome Lamp/LI122UN Room Controller, master stations, multicolor zone lights, mobile devices, or other annunciation locations to which it is assigned.

Depending on system programming, some low-priority calls can be silenced or reset from the master station. If this option is available on your system, the gray buttons on the right side of the NC415G3 housing are used. The buttons are labeled accordingly.

Please refer to IL1068 Tek-CARE Master Station User Guide for further instruction on how to use the NC415G3 Master Station.

Copyright © TekTone Sound and Signal Mfg., Inc. All Rights Reserved

Module:				
Port:				
Address:				
Point	Default Station ID	Assigned Station	Hardware Type	Function
1				
2				
3				
4				
5				
6				
Red / Blue				Standard / Zone
White				Standard / Zone

Module:				
Port:				
Address:				
Point	Default Station ID	Assigned Station	Hardware Type	Function
1				
2				
3				
4				
5				
6				
Red / Blue				Standard / Zone
White				Standard / Zone

Module:				
Port:				
Address:				
Point	Default Station ID	Assigned Station	Hardware Type	Function
1				
2				
3				
4				
5				
6				
Red / Blue				Standard / Zone
White				Standard / Zone

Module:				
Port:				
Address:				
Point	Default Station ID	Assigned Station	Hardware Type	Function
1				
2				
3				
4				
5				
6				
Red / Blue				Standard / Zone
White				Standard / Zone

Module:				
Port:				
Address:				
Point	Default Station ID	Assigned Station	Hardware Type	Function
1				
2				
3				
4				
5				
6				
Red / Blue				Standard / Zone
White				Standard / Zone

Module:				
Port:				
Address:				
Point	Default Station ID	Assigned Station	Hardware Type	Function
1				
2				
3				
4				
5				
6				
Red / Blue				Standard / Zone
White				Standard / Zone

Copyright © TekTone Sound and Signal Mfg., Inc. All Rights Reserved