NDA-3083-TBLV Bubble, tinted, FD3100i indoor



- Tinted
- Easy installation

The NDA-3083-TBLV is a tinted bubble accessory that allows for an easy replacement of the device's original bubble, providing a colored bubble alternative with a light opacity level. It is applicable to all FLEXIDOME indoor 3100i cameras.

Installation/configuration notes

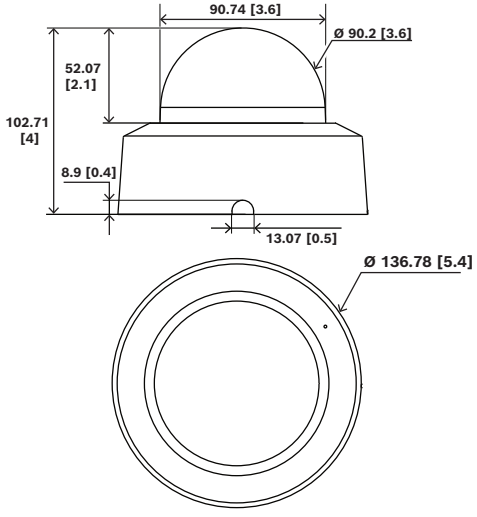

Dimensions in mm (inch)

Parts included

Quantity	Component
1	Tinted bubble with housing
1	Quick installation guide

Technical specifications

Mechanical

Housing Material	Polycarbonate housing
Color (RAL) (housing)	RAL 9003 Signal white
Bubble material	Tinted polycarbonate
Coating type	Clear with anti-scratch coating
Dimensions (Ø x H) (mm)	137 mm x 103 mm
Dimensions (Ø x H) (in)	5.39 in x 4.05 in
Weight (g)	118 g
Weight (lb)	0.26 lb

Represented by:

Europe, Middle East, Africa:
Bosch Security Systems B.V.
P.O. Box 80002
5600 JB Eindhoven, The Netherlands
www.boschsecurity.com/xc/en/contact/
www.boschsecurity.com

Germany:
Bosch Sicherheitssysteme GmbH
Robert-Bosch-Platz 1
D-70839 Gerlingen
www.boschsecurity.com

North America:
Bosch Security Systems, LLC
130 Perinton Parkway
Fairport, New York, 14450, USA
www.boschsecurity.com

Asia-Pacific:
Robert Bosch (SEA) Pte Ltd, Security Systems
11 Bishan Street 21
Singapore 573943
www.boschsecurity.com/xc/en/contact/
www.boschsecurity.com

© Bosch Security Systems 2024

NDA-3083-TBLV Bubble, tinted, FD3100i indoor

Ordering information

NDA-3083-TBLV Bubble, tinted, FD3100i indoor
Tinted bubble for FLEXIDOME indoor 3100i cameras
Order number **NDA-3083-TBLV**

Represented by:

Europe, Middle East, Africa:
Bosch Security Systems B.V.
P.O. Box 80002
5600 JB Eindhoven, The Netherlands
www.boschsecurity.com/xc/en/contact/
www.boschsecurity.com

Germany:
Bosch Sicherheitssysteme GmbH
Robert-Bosch-Platz 1
D-70839 Gerlingen
www.boschsecurity.com

North America:
Bosch Security Systems, LLC
130 Perinton Parkway
Fairport, New York, 14450, USA
www.boschsecurity.com

Asia-Pacific:
Robert Bosch (SEA) Pte Ltd, Security Systems
11 Bishan Street 21
Singapore 573943
www.boschsecurity.com/xc/en/contact/
www.boschsecurity.com

© Bosch Security Systems 2024