An ***M2M Services*** Brand

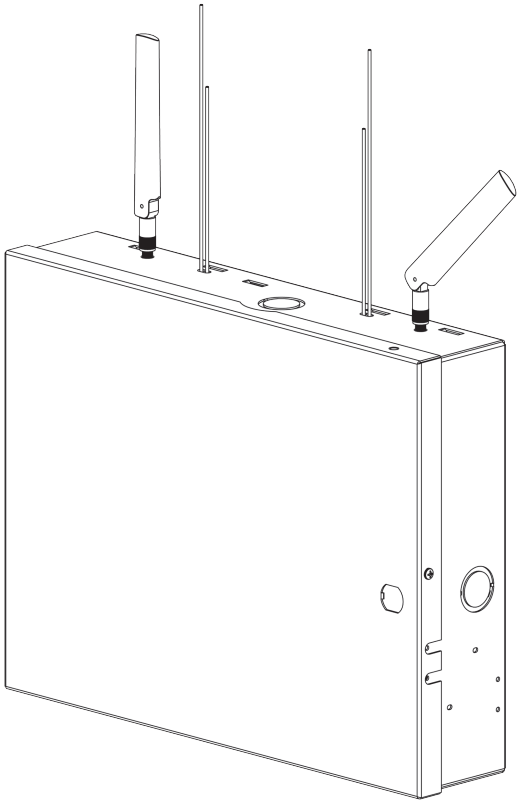

Connect-XiP Hybrid Security and Automation Panel

INSTALL GUIDE

Connect-XiP™
Security and Automation Platform Installation Guide

Connect-XiP is a professional hybrid security panel designed to deliver security and automation services. Secured and supervised Multi-Carrier SIM Cellular, Wi-Fi™ and Ethernet connections come standard. Its long-range encrypted wireless receivers, and hardwired sensors easily provide whole site coverage. An integrated sensor translator simplifies takeovers of existing systems.

FEATURES

- Hybrid panel supporting wireless and wired sensors
- Multi-Carrier Cellular
- Wi-Fi and Ethernet
- Control from a user's mobile device
- Local Touchpad or Keypad control
- Up to 96 zones
- Up to 100 users
- Up to 8 partitions
- 10 on-board hardwired zones
- Supports 2-wire and 4-wire smoke alarms
- 5 Programmable outputs
- Optional Z-Wave
- 5 year warranty

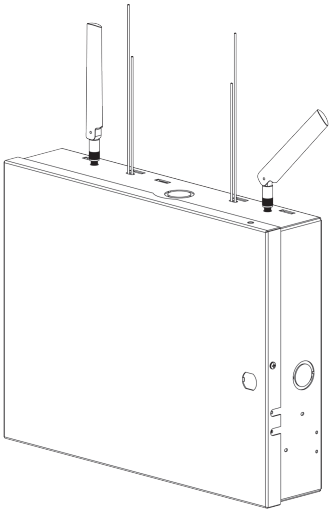

ITEMS INCLUDED IN THE BOX

- Connect-XiP panel
- 13.5VDC power adapter
- 2 Long RF Antennas
- 2 Short RF Antennas
- 2 Paddle Antennas
- 6-foot Ethernet cable
- Mounting Kit
- 10 2k EOL Resistors
- Installation guide

System Setup

❶ **Set up a new account** with Alula following the instructions in the platform guide included. You will need the MAC address, which is located inside the panel housing as shown below.

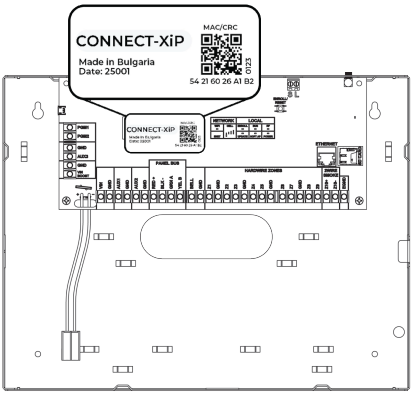

STOP **DO NOT PROCEED UNTIL YOU HAVE FINISHED STEP ❶**

❷ **Find a location** for the panel, keeping in mind it needs AC power and at least one network connection.

Panel Location Guidelines

- Locate centrally on the main floor.
- Avoid mounting below ground level.
- Do not mount near ducts, appliances, or other large metal objects.
- Do not mount directly adjacent to other RF devices.

❸ **Mount the panel and install the antennas** to the wall using the mounting holes in the back of the housing. Install the included paddle antennas. Install the 6" antennas into the terminals labeled "S". Install the 8 3/4" antennas into the terminals labeled "L".

Mounting Holes

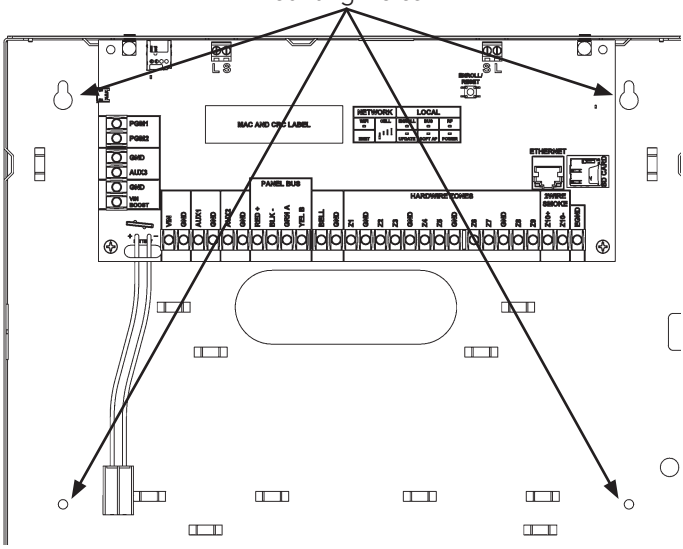

Antenna Installation

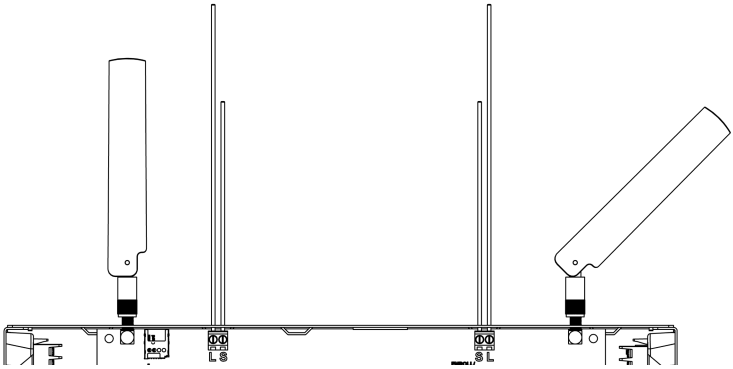

❹ **Wire the panel** by connecting the battery, wired zones, BUS-connected devices, and ethernet if applicable.

❺ **Power up the panel** by connecting the power supply to the "VIN/GND" terminals. *Do not connect the panel to an AC power receptacle controlled by a switch.*

❻ **Enroll sensors and peripherals** by following the sensor enrollment and configuration instructions below.

❼ **Install your wireless sensors & peripherals** in desired locations around the location. See sensors and programming sections below. For additional information, refer to the specific device manual regarding installation and use.

❽ **Configure the panel, sensors, and peripherals** using Touchpad programming or the AlulaConnect dealer portal. If using Wi-Fi, connect the panel to the local network. Configuration options are described in the configuration guide.

❾ **Finally, test the system** after finishing installation, enrollment, and configuration. Verify proper operation of all installed sensors and peripherals using the Alula app, Touchpad programming, or the AlulaConnect dealer portal. All sensors should score at least 20 on the RF signal strength indicator.

LED Guide

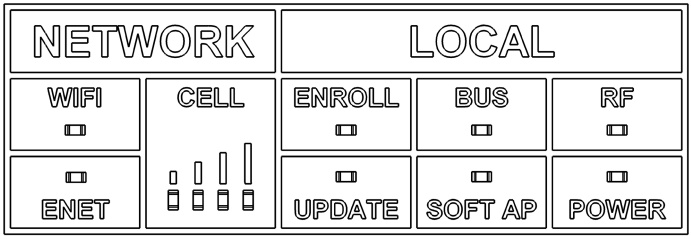

NETWORK LEDs

- Cellular LEDs indicate signal strength of the panel. 2 bars and up is acceptable signal strength.
- Wi-Fi LED is solid green, it indicates that the panel is connected to Wi-Fi as the primary interface. Wi-Fi LED is flashing green, it means Wi-Fi is connected, but used as backup interface
- ENET (Ethernet) LED is solid green, it indicates the panel is connected to Ethernet as the primary interface. ENET LED is flashing green, it means Ethernet is connected, but used as backup interface.

Network LEDs	Solid	Flashing
Cell	2+ bars is acceptable	
Ethernet	Connected	Backup
Wi-Fi	Connected	Backup

LOCAL LEDs

- ENROLL LED flashing indicates the panel is in enroll mode
- UPDATE LED flashing indicates the panel is receiving an update
- SOFT AP LED flashing indicates Enroll Mode.

Local LEDs	Solid	Flashing
Enroll	N/A	In Enroll Mode
BUS	N/A	Flickering = Receiving data
RF	N/A	Flickering = Receiving data
Soft AP	Operating Normally	In Enroll Mode
Update	Up to Date	Receiving update

Power	Pulsing On/Dim	Normal
	Pulsing On/Off	AC Okay, Battery low or missing
	Short Blink Every 3s	AC Fail
	Rapid Blink	Powered Output Overcurrent Fault

Wiring the Panel

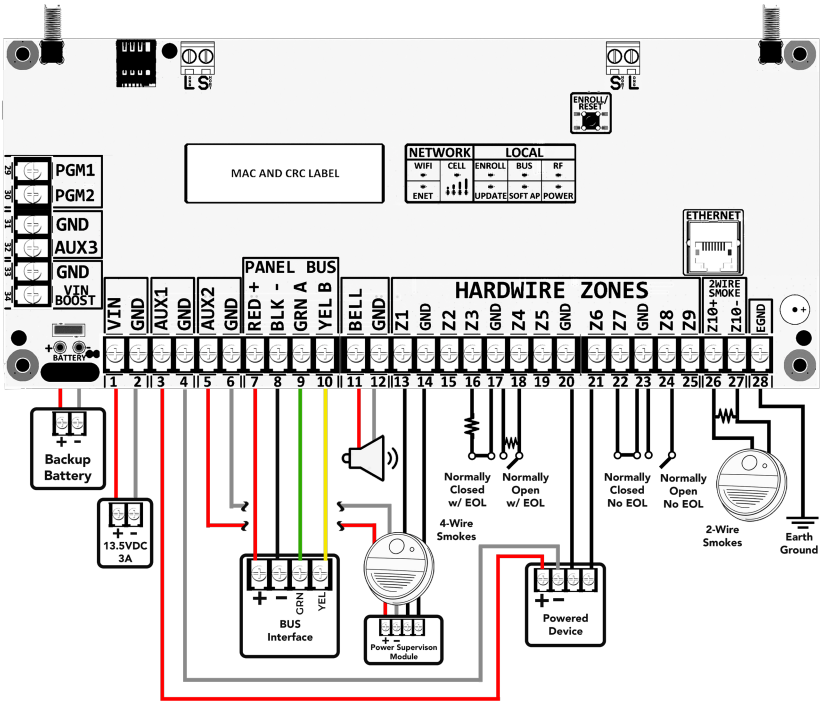

Connect the 13.5V, 3A external power supply to the VIN and GND terminals on the lower left side of the board.

BUS Devices

Up to 31 BUS devices can be connected to the panel.

Wiring Runs to BUS devices:

Wire Gauge (AWG)	Total Current of All Devices Connected to a Single Wire Run			
	50mA or less	100mA	350mA	500mA
#22	1980ft (603m)	990ft (301m)	275ft (83m)	200ft (60m)
#20	3150ft (960m)	1570ft (478m)	450ft (137m)	310ft (94m)
#18	4000ft (1219m)	2500ft (762m)	700ft (212m)	500ft (152m)
#16	4000ft (1219m)	3980ft (1213m)	1100ft (335m)	800ft (243m)

Wire Gauge (AWG)	Total Current of All Devices Connected to a Single Wire Run			
	750mA	1000mA	1250mA	1500mA
#22	130ft (39m)	100ft (30m)	75ft (22m)	65ft (20m)
#20	200ft (60m)	155ft (47m)	125ft (38m)	100ft (30m)
#18	330ft (100m)	250ft (76m)	200ft (60m)	165ft (50m)
#16	525ft (160m)	400ft (121m)	315ft (96m)	260ft (79m)

Touchpad Wiring and Configuration

Enroll wireless Touchpads by first pressing the Enroll button on the panel (roughly 3 seconds) until the enroll LED begins flashing, and then selecting the panel you wish to connect to on the Touchpad.

Connect Touchpads via the BUS by connecting the BUS wires on the Touchpad to the corresponding PANEL BUS terminals on the panel. Touchpads can be connected to the data terminals on the BUS, and powered locally to reduce power draw on BUS. Refer to device power requirements table for Touchpad power requirements.

Sensor Enrollment and Configuration

Enroll and configure sensors using Touchpad programming, or the AlulaConnect dealer portal. Configuration options are described in the configuration guide.

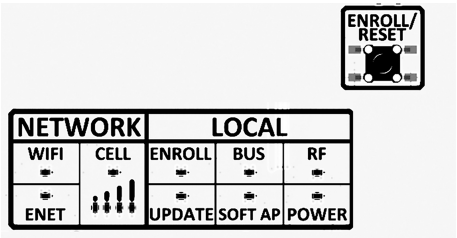

Enroll wireless sensors by first pressing the Enroll button on the panel (roughly 3 seconds) until the enroll LED begins flashing, and then sending an enrollment signal from the sensor or peripheral. Alternatively, a device can be enrolled by entering its 8-character serial number on Touchpad programming, or AlulaConnect dealer portal.

Enrollment Tips

- Enrollment signals are typically triggered by removing the battery tab or tampering the device. See the specific device manual for more information.
- The Alula App, Touchpad programming, and the AlulaConnect dealer portal can be used to enroll and configure sensors.
- The AlulaConnect dealer portal provides a way to enter and exit wireless enrollment mode.
- Wireless enrollment mode will end 5 minutes after the last sensor is enrolled.
- Enrolling a Touchpad or other 2.4GHz peripheral will automatically end wireless enrollment mode.
- Short hold of the Enroll button will end wireless enrollment mode.

Sensor Signal Strength Tips

- The signal strength scale is from 0 to 100 (0 to 5 bars).
- Ensure sensors have a signal strength of at least one bar (e.g. a signal strength of at least 20).
- Signal strength readings are averaged. If you move the panel or a sensor, it takes some time for the signal strength readings to update. Tripping a sensor several times will help update a sensor's signal strength faster.
- Before mounting a sensor permanently, expose a slight portion of its mounting tape and apply it (very lightly) to the desired location. If it performs well, mount it permanently. If it performs poorly, try rotating it by 90 degrees.
- Do not test a mounting location by tripping a sensor in your hand. Holding a sensor changes how it radiates RF energy. Sometimes these "hand effects"

Wire hardwired sensors by connecting the devices to one of the 10 zone terminals and shared ground terminals on the panel, or hardwired expansion modules, and using one of the enrollment methods listed below.

> ***Pro Tip***
> - Zone 9 shares a ground with zones 7 and 8.
> - Zone 10 (Z10+ and Z10-) is an isolated zone and cannot share a ground with any other zone.
> - Zone 10 is configured as a 2-wire smoke zone by default. To use as a normal zone, disable 2-wire smoke power output in panel programming.

EOL Resistors with values 1k-8.2k can be used for non-smoke hardwire sensors. Smoke sensors must use 2k EOL resistors. 2k EOL resistors are included with this product.

Enroll Using Hardware ID can used to add via the AlulaConnect > Device > Peripherals > Zones > "Add New Zone" button. and selecting the module ID and zone input index you wish to enroll.

Trip-to-enroll can be used by holding the enroll button for approximately 3 seconds to enter enroll mode. Proceed to trip zones to enroll them in the panel.

Hardwired Smoke Alarms

4-Wire Smoke Alarms can be used on hardwired zones 1-9, and on zone expansion modules. The zone selected needs to be programmed as a 4-wire smoke alarm Zone Profile. Power for 4-wire smoke alarms can be sourced from Aux 1, Aux2, or Aux3. If used for 4-wire smoke alarm power, Aux power must be configured as resettable zone power. Alternatively, a PGM1 or PGM2 can be used to reset the smoke power by connecting the negative power wire of the 4-wire smokes to a PGM output and configuring the PGM for resettable zone power.

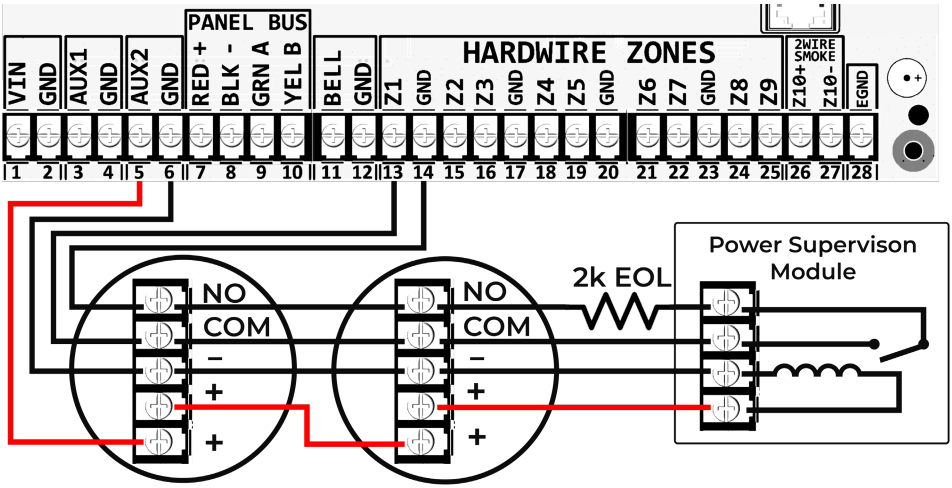

2-Wire Smoke Alarms can be used only on hardwired zone 10. If zone 10 is configured for 2-wire smoke alarm, the panel will supply 12V to the Z10 terminal to power the 2wire smoke alarm loop. Up to 16 2-wire smoke alarms can be used on the 2-wire smoke alarm loop.

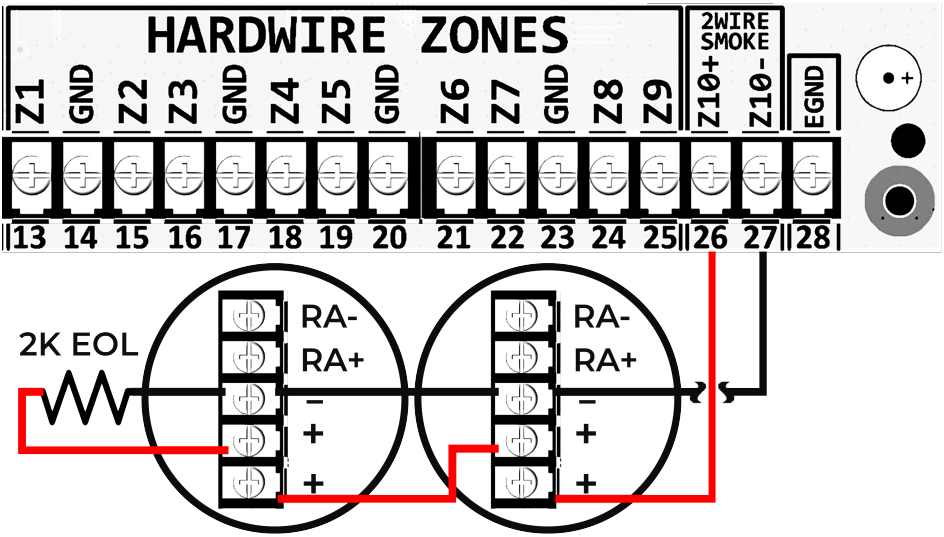

Smoke Alarms require 2k Ohm EOL resistors.

Compatible with detectors with identifier "A" Supported Honeywell ® Vista 2-Wire Smoke Detectors: (2k EOL resistor required)		
1100	2W-B	2300TB
1400	2WT-B	2400 (TH)
1451 w/B401B base	2WTA-B	2451 w/DH400 base
1451D w/DH400 base H	2100T	2451TH w/B401B base

2-Wire Smoke Alarms used should be the same models, not be mixed and matched. Up to 16 smoke alarms can be used on Zone 10.

Hardwired Zones can be wired in either Normally Closed, or Normally Open configurations. 1k-8.2k EOL resistors can be used if supervision is necessary. *For UL commercial burglar alarm installations, use EOL resistors.*

Connect a Siren by wiring it to BELL and associated GND terminals. By default, the siren is enabled in all partitions, but this can be modified to only sound for specific partitions. Sirens supported are 12VDC, and use 1.5A or less. For UL Listed configurations, sirens should be UL listed, use 600mA or less, have Siren Supervision enabled and use a 2k EOL resistor.

Zone Expander Modules add up to 8 zones to the panel.

Pro-Tips

RF Signal Strength is an averaged signal-to-noise indication. Even in the absence of sensor transmissions, the panel experiences ambient RF energy (i.e. noise). The RF signal strength indication represents a sensor's signal relative to ambient noise. If multiple sensors score low signal strength, this could be due to one or more of the following:

- **High ambient noise -** Ensure the panel is not mounted adjacent to other electronics.
- **Panel isn't centrally located, or is mounted below ground -** Move the panel to a central location in the home that is above ground level.
- **Panel is located near ducts, appliances, or other large metal objects** - Relocate the panel away from these types of objects.

Install Expansion Modules in the can by inserting the modules back into the tabs, and pressing down until you hear a click. Press the tab on the front of the module and lift to remove it.

Expansion Module Mounting Locations

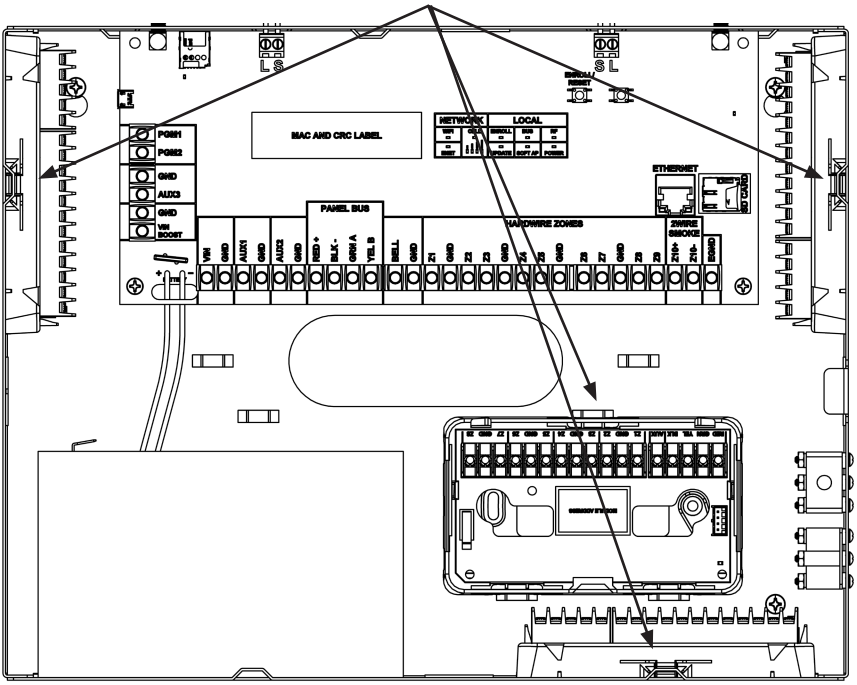

Programming the Panel

Partitions are enabled on AlulaConnect under the Panel Settings tab. Any number of partitions between 1 and 8 can be toggled on. Once partitions are enabled, their settings can be adjusted under this same tab.

Sensors can be assigned to a partition either at the enrollment phase, or afterwards in the zone settings.

Power Supply

With the included power supply, the panel outputs can deliver a combined current of 2A. If a second 13.5VDC 3A power supply is connected to the VIN BOOST and GND terminals, an additional 3A of current is available on AUX3 for a total combined current of 5A. (3A on AUX3 + 2A combined current for AUX1, AUX2, and RED+). When the panel detects that the second power supply has been added, it changes the current limiter for AUX3 from 1.5A to 3A. VIN BOOST power has not evaluated by ETL. Do not connect to receptacle controlled by a switch.

Backup Battery should be placed in the cabinet. Connect the battery cables to the +/- terminals on the lower left corner of the board. Connect the spade connectors to the +/- connections. *Follow battery manufacturer's recommendations for replacement intervals, mounting positions, temperature limits, state-of-charge, and periods of inactivity to ensure proper battery life.*

Wireless performance of door window sensors is optimized when mounted vertically near the top corner of the door.

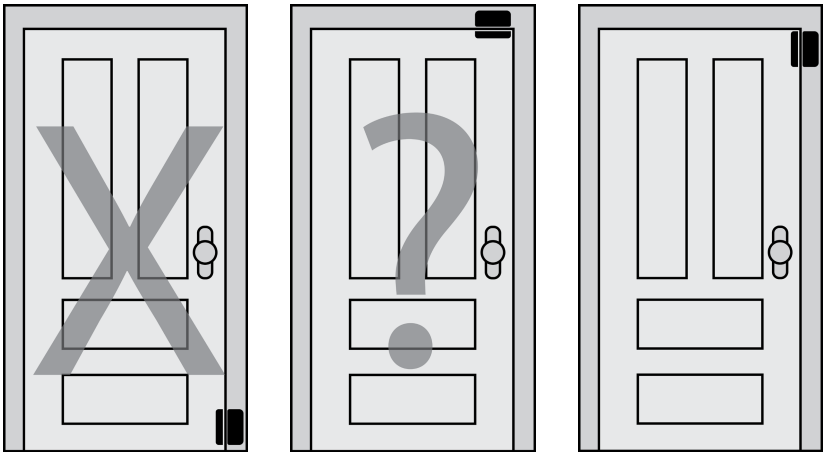

WRONG OK BEST

Routers, modems, and other electronic devices emit RF noise. For best results, avoid mounting the panel directly beside other electronic devices.

Trouble beeps can be suppressed so they only occur during a specific window of time each day.

- Use the alulaconnect.com dealer portal to configure the trouble beep suppression period.
- Trouble beeps can be temporarily silenced for 24 hours using a Keypad or Keyfob.

Smoke Alarms should be installed in accordance with Chapter 2 of "ANSI/NFPA 72: National Fire Alarm and Signaling Code" (National Fire Protection Association, Batterymarch Park, Quincy, MA 02169) when installed in the USA. Smoke alarms installed in Canada should be installed in accordance with "Standard for the Installation of Residential Fire Warning Systems, CAN/ULC-S540".

This control complies with NFPA requirements for temporal pulse sounding of fire notification appliances. Temporal pulse sounding for a fire alarm consists of: 3 pulses - pause - 3 pulses - pause - 3 pulses-etc

Smoke Alarm Placement

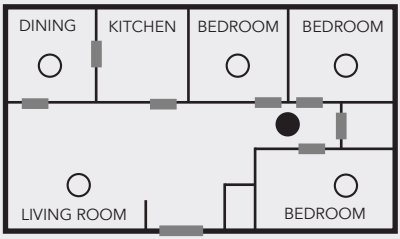

(Single Sleeping Area)

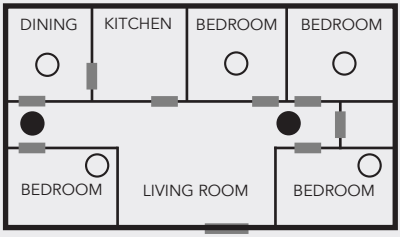

(Multiple Sleeping Areas)

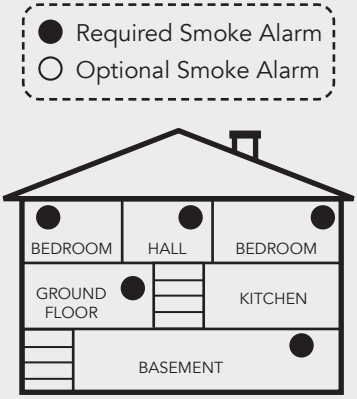

(Multi-Floor Home)

NOTE: Regulations pertaining to smoke alarm installations vary. Contact your local fire department for more information.

Should the battery need replacing, remove the cover, disconnect the old battery, and connect a new battery. Replace battery every 6 years under normal operating conditions.

Emergency Planning

Emergencies happen, so have a plan.

Emergency Planning Tips

- Periodically discuss and rehearse emergency plans.
- Understand how to use your security system.
- Know the normal states of doors and windows: open, closed, or locked.
- Escape fast! (Do not stop to pack.)
- Use a different escape route if closed doors feel hot to the touch.
- Smoke is toxic. Stay low and breathe strategically when escaping a burning building.
- Designate a nearby landmark as a safe family re-grouping location.
- Emphasize that no one should return to the premises if there is a fire.
- Call 911 as soon as possible but do it in a safe location.
- Do not enter the premises if you arrive and hear sirens. Call for emergency assistance from a safe location.

Emergency Evacuation Plan

Establish and regularly practice a plan of escape in the event of fire. The following steps are recommended by the National Fire Protection Association:

- Position your detector or your interior and/or exterior sounders so that they can be heard by all occupants.
- Determine two means of escape from each room. One path of escape should lead to the door that permits normal exit from the building. The other may be a window, should your path be impassable. Station an escape ladder at such windows if there is a long drop to the ground.
- Sketch a floor plan of the building. Show windows, doors, stairs, and rooftops that can be used to escape. Indicate escape routes for each room. Keep these routes free from obstruction and post copies of the escape routes in every room.
- Assure that all bedroom doors are shut while you are asleep. This will prevent deadly smoke from entering while you escape.
- Try the door. If the door is hot, check your alternate escape route. If the door is cool, open it cautiously. Be prepared to slam the door if smoke or heat rushes in.
- When smoke is present, crawl on the ground. Do not walk upright, since smoke rises and may overcome you. Clearer air is near the floor.
- Escape quickly; don't panic.
- Establish a common meeting place outdoors, away from your house, where everyone can meet and then take steps to contact the authorities and account for those missing. Choose someone to assure that nobody returns to the house —many die going back.

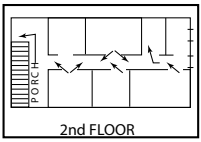

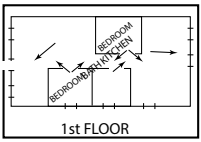

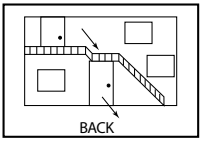

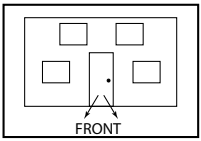

Carbon Monoxide (CO) Detectors, if installed provide continuous detection. If a high level of carbon monoxide is detected, a temporal four alarm sound occurs at the control unit and the detector(s). Immediately move to a spot where fresh air is available, preferably outdoors. From a safe area call your security service provider for further instruction. The system is to be monitored by a servicing station with emergency response.

Using the Keypad

See the Keypad manual for detailed operation.
Disarm the system by entering a valid user code on the number pad.

Arm Away by pressing the Lock Icon

Arm Stay by pressing the House Icon

Trigger a Fire Alarm by pressing and holding the 1 and 3 keys for 3 seconds

Trigger an Auxiliary Alarm by pressing and holding the 4 and 6 keys for 3 seconds

Trigger a Panic Alarm by pressing and holding the 7 and 9 keys for 3 seconds

Adjust the Volume by holding the √ (checkmark) and pressing 0-9

Adjust the Brightness by holding the X and pressing 0-9

Keypad LED Indications:

There are three Categories of LEDs, Arming Button LEDs, Number Pad LEDs and Power LED

Arming Button LEDs: LEDs come in different color to Indicate the current arming Level

Arm Away: (Lock icon button), Red LED

Disarm: (Unlock icon button), Green LED

Arm Stay: (Home icon button), Orange LED

Arm Away: (Lock icon Button)

Red Solid: Armed Away

Red Fading in and out: Armed Away entry/exit delay

Disarm: (Unlock Button)

Green Solid: Disarmed and ready to arm

Green Fading in and out: Disarmed and not ready to arm

Arm Stay: (Home icon Button)

Orange Solid: Armed Stay

Orange Fading in and out: Armed Stay entry/exit delay

Alarm: Red blinking rapidly (Lock icon button) and Orange blinking rapidly (Home icon button)

Using PINPad

See PINPad™ manual for detailed operation.
Disarm the system by entering a valid user code on the number pad.

Arm Away by pressing the "AWAY" button until the PINPad LED flashes red.

Arm Stay by pressing the "STAY" button until the PINPad LED flashes red.

Trigger a panic alarm by pressing the "STAY" & "AWAY" buttons together until the PINPad LED flashes red.

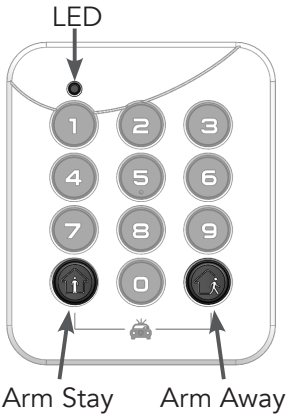

PINPad

Connectivity Troubleshooting

Symptom	Troubleshooting Steps
Network Connectivity LED Off	Ethernet Connections • Ensure the Ethernet cable is fully inserted in both the panel and router/modem. Wi-Fi Connections. • Ensure the panel has been configured with the proper Wi-Fi credentials and the Wi-Fi LED is on solid. If the LED is blinking either the network is not in range, or the Wi-Fi credentials are incorrect. (Refer to System Setup - Step 5). Cellular Connections • Ensure the Cell LED is pulsing. • A solid LED indicates the panel is connected to the network. • A flashing LED indicates the panel has found a tower, and is attempting to connect to the network. Wait until the LED is solid. If the LED has been double flashing for more than ten minutes, try power cycling the panel.
Alula Platform or Central Station Connectivity	• Ensure the Network Connectivity LED is on. If it is off, see the network connectivity troubleshooting section above. • Ensure port UDP 1234 is open in the router/modem settings. • Ensure the panel is registered to an account with Alula and the account is active.
System Firmware Update LED Off	• Ensure port UDP 1235 is open in the router/modem settings. The panel and peripherals will not be able to receive firmware updates if this port isn't available or is already in use.

System Maintenance

System testing should be performed after installation is completed and whenever a problem occurs.

Smoke and CO alarms should be tested after installed and weekly by pressing the test button on the alarm. The panel will indicate it has properly received a test signal by sounding a temporal three sound for a Smoke alarm or a temporal four sound for a CO alarm.

Critical functions and communication links of the system are automatically monitored and exercised to detect trouble conditions.

Regulatory

UL SYSTEM REQUIREMENTS

Control Unit, consisting of:

- Base Panel: CONNECT-XIP
- Backup Battery: 12VDC, 7Ah, Lead Acid
- Power Supply: RE012-20 (In: 100-240VAC; Out: 13.5VDC, 3A)
- RE662 Keypad, or RE665W/RE665WB Touchpad with AC status light as indicated in their respective manuals
- Cover and wall tamper (Ex: RE054 Lock set & Tamper Kit)
- Cellular, Wi-Fi, or Ethernet connection

Compatible ETL listed signal initiating devices:

- RE614 Smoke Alarm
- RE615 CO Alarm
- RE601 Door/Window Sensor
- RE622 NanoMax Door/Window Sensor
- RE611P Motion Detector

Optional devices, not ETL listed:

- Any of a wide array of Connect Encrypted, Compatible, and Hardwired sensors

UL1023 Household Burglar Alarm System:

- Control Unit
- At least one burglary signal initiating device
- Entry delay: 45 seconds or less
- Exit delay: 60 seconds or less
- Sensor supervisory: 24 hours or less
- Panel status volume: on
- Panel siren: on
- Auto force arm: on
- Siren timeout: 4 minutes or more

ORD-C1023-1974 Canadian Household Burglar Alarm System:

- Control Unit and installation as described for UL1023
- Power supply: RE012-20, Do NOT secure with a receptacle securing screw. Ne pas se connecter CONNECT-XIP à une prise contrôlée par un interrupteur.
- Siren timeout: 6 minutes or more

UL985 Household Fire Warning System:

- Control Unit
- First Alert VISTAHISO isolator module
- At least one smoke signal-initiating device enrolled into “Fire” zone profile.
- Smoke supervision: on
- Panel siren: on
- Panel sire supervision: on
- Siren timeout: 4 minutes or more
- Default Configuration (on)/ UL Compliant option must be ON

ULC-S545 Canadian Household Fire Warning System:
Control Unit and installation as described for UL985

- Power supply: RE012-20, Do NOT secure with a receptacle securing screw. Ne pas se connecter CONNECT-XIP à une prise contrôlée par un interrupteur.
- Siren timeout: 6 minutes or more

- RF supervision: 4 hours
- Communication interface supervision: on
- Entry delay plus reporting delay must not exceed 60 seconds.
- Reporting delay is 30 seconds.

Network Equipment:
- Use a UL 60950-1 listed broadband router/modem for the 10/100 Ethernet port or Wi-Fi connection

UL 2610 Commercial Burglar Alarm System:
- Commercial: On
- The product shall be installed in accordance with National Electrical Code, ANSI/NFPA 70, the standard for Installation and Classification of Burglar and Holdup Alarm Systems, UL 681, the Standard for Central-Station Alarm Services, UL 827, CSA C22.1, Canadian Electrical Code, Part I, Safety and Standard for Electrical Installations, CAN/ULC S302, Standard for the Installation, Inspection and Testing of Intrusion Alarm Systems, and CAN/ULC S301, Installation, Inspection and Testing of Intrusion Alarm Systems, and CAN/ULC S301, Standard for Signal Receiving Centre Intrusion Alarm Systems and Operations.
- Ethernet Port must be connected directly to a router without any Ethernet switches.
- Siren Test: Siren should be tested once a week. Trip alarm to sound the siren. Disarm system to silence siren. Contact Central Station if alarms will be reported.
- Intended use includes: Commercial Central Station, Encrypted Line Security, Single and Dual Signal Line Transmission
- Communication interface options need to have supervision enabled.
- Remote features were not evaluated to UL2610 requirements.

Additional Notes:
- Protective Features :This system includes protective features such as supervision of system wiring, wireless devices, communication paths, power supply, and backup battery.
- Warning: Do not bypass, disable, or defeat any protective or supervisory feature of this system. Bypassing protective features may result in failure to detect alarm conditions and may result in property damage, serious injury, or loss of life.
- An automatic telephone dialer or similar device shall not be programmed to place a call to a police station telephone number unless that number has been specifically assigned by the police station for such service.
- Ethernet connection is only allowed to a router located in the same room as the control unit
- PGM port connections are only allowed to be run in the same room as the control unit

The following conditions may result in false alarms or impaired operation of the system:
- Improper installation or wiring
- Installation outside of recommended environmental limits
- Radio frequency interference or shielding of wireless devices
- Loss of AC power beyond available battery standby capacity
- Depleted or improperly maintained backup battery
- Loss of network, cellular, or communication services
- Bypassing or disabling system supervision features
- Regular testing and maintenance of the system are required to ensure proper operation
- To Identify current software and firmware versions, use the AlulaConnect web portal.
- Product is designed to be installed by a trained installer.
- Product is intended to be installed within the protected area
- For initiating device circuits, recognized energy limited wiring is required to be used.
- If installed outside a secure/restricted room/premises use a UL-listed tamper in the box
- If installed inside a secure/restricted room/premises, wall tamper not required.

User Information - Definitions

Report Delay: Consult with your installer to determine if your system is configured with a communicator delay. A communicator delay will prevent a report to the central station if the control panel is disarmed within _____ seconds (default is 30 seconds) after an intrusion alarm is triggered. Note that fire-type alarms and Carbon Monoxide alarms are normally reported without a delay.

Exit Delay: The period of time allowed, after Arming a security system, to exit the entry/exit door without tripping an alarm. Note: Enabling silent exit doubles the exit delay time.

Entry Delay: The door used to enter the premise will start an entry delay when tripped. You will hear entry delay beeps when you trip the sensor: this will allow you time to disarm the system. Entering a user code will disarm the system.

Entry Delay Progress: Three beeps every four seconds and three beeps every two seconds during the last ten seconds of entry delay.

Exit Delay Progress: Two beeps every two seconds and two beeps every second during last ten seconds of exit delay time.

System Acknowledgment: Sounders will sound one beep to confirm disarm, two beeps to confirm stay arming and four beeps to confirm away arming.

Exit Delay Restart: The feature will recognize when you arm the system, leave your house and then quickly re-enter. If this happens, the system will restart your exit delay to give you the full exit delay again.

Auto Stay Arming: Determines whether the system automatically arms down to Stay if you arm the system to Away without exiting the system entry/exit door. This feature will not be enabled when arming from a keyfob.

Arming Level - Disarm: In this level, only 24-hour sensors are active.

Arming Level - Stay: Perimeter sensors are active. Interior sensors are not active.

Arming Level - Away: Perimeter and interior sensors are active.

Panic Alarm: To trigger panic alarm from Keypad, press and hold stay and away buttons at the same time.

Alarm Abort: If the panel beeps three times after disarming an alarm, then the alarm is aborted.

Alarm Cancel Report: If an alarm has previously been transmitted, a cancel signal will be transmitted when the alarm system is disarmed. The panel will sound two beeps three seconds after disarming when sending a cancel message.

Alarm Memory: After canceling an alarm, press status on Keypad to view alarm memory.

Duress Code: The user uses a unique code, which disarms the system and transmits a "Duress" alarm to the monitoring center.

Cross Zoning: Refers to two different sensors that must be tripped within two minutes of each other to report an alarm to the central station. When motion is detected by the first sensor, it starts a two minute timer. If the other sensors trip within two minutes, an alarm report will be sent to the central station.

Swinger Shutdown: This setting determines how many times the sensor will go into alarm during a single arming period. Once the sensor is in swinger mode it will not be active again until the alarm is canceled.

Note: Swinger shutdown does not affect Fire and Carbon Monoxide sensors.

Fire Alarm Verification: The panel immediately reports to the central station when a smoke alarm goes into alarm. With this option on, if a single smoke alarm goes into alarm, the panel will not report for 60 seconds unless another smoke alarm goes into alarm. If the first smoke alarm is cleared of an alarm within the first 60 seconds, no report will be sent to the central station unless it or a second smoke alarm goes into alarm within 5 minutes.

User Information - Testing the System

Before testing alarms, contact your central station and tell them you are testing the system.

Central station phone number _____

System account number _____

Test door/window sensors by first closing all doors and windows that have sensors. Verify the display on the keypad or mobile app indicates the system is in the ready state. Trip each sensor by opening the door or window and verify it shows open at the keypad or on the mobile app.

Test smoke alarms by pressing the test button until smoke alarm sounds. Check mobile app activity to verify fire walk test signal was reported. (The sirens will play one cycle of the temporal 3 siren pattern when a smoke test is pressed).

Test CO alarms by pressing the test button until CO alarm sounds. Check mobile app activity to verify CO test signal was reported. (The sirens will play one cycle of the temporal 4 siren cadence when a CO test is pressed.)

Test glassbreak sensors using a glass break sound tester to trip sensor.

Testing Panic Alarms: Panic alarms will be reported to the central station and will cause the panel siren to sound. Ensure your central station knows you are testing the system. Press the panic button and verify the system goes into alarm. To test panic alarms on the RE656 Keypad and RE652 PINPad, press and hold the stay and away arming buttons to trigger a panic alarm.

Test panel communication by verifying the alarms you tripped were reported to and received by the central station.

When finished, remember to tell the central station you are done testing the system.

WARNING: THIS UNIT INCLUDES AN ALARM VERIFICATION FEATURE THAT WILL RESULT IN A DELAY OF THE SYSTEM ALARM SIGNAL FROM THE INDICATED CIRCUITS. THE TOTAL DELAY (CONTROL UNIT PLUS SMOKE DETECTORS) SHALL NOT EXCEED 60 SECONDS. NO OTHER SMOKE DETECTOR SHALL BE CONNECTED TO THESE CIRCUITS.

All equipment necessary for the transmission of alarm, trouble, supervisory and other signals located at the residence shall have a secondary power capacity of 24 hours.

Outputs

With the standard power supply connected, the Xip panel outputs can supply a total current of 2A. The total maximum combined current of AUX1, AUX2, AUX3, and RED+ must not exceed 2A. Below are more details on the functionality of these outputs.

AUX1, AUX2, AUX3 are 13.5VDC outputs that are current limited at 1.5A. The Aux output behavior is programmable but has the following defaults:

AUX1	Always on
AUX2	Resettable zone power
AUX3	Always on
RED+ is a 13.5VDC output current limited to 1.5A. Always on and is not programmable.	

BELL can supply bells/sirens with 13.5VDC and is current limited at 1.5A. By default, the BELL output is enabled for all partitions, but can be disabled or programmed to only sound for specific partitions.

PGM1, PGM2 are programmable outputs that switch to ground when activated. Connect the positive side of the device to a power terminal (AUX1, AUX2, AUX3, or RED+) and the negative side to the PGM terminal. PGM outputs can be used to switch power to devices like sirens, 4 wire smoke detectors, and powered sensors. PGM outputs can also be used to provide event triggers to other systems. They are rated for 24VDC and can switch up to 1A of current.

Voltage Specs

VOLTAGE RATINGS	MINIMUM	MAXIMUM	NOMINAL
VIN			13.5 VDC - 3A
VIN BOOST			13.5 VDC - 3A
OUTPUTS	9.2 VDC	13.5 VDC	13.5 VDC
BATTERY			12V, 7AH, Lead Acid

Panel Max Currents

Output	Alarm/Max Current
AUX1 AUX2 AUX3 RED+	2A Combined
BELL	1.5A (600mA for UL Installations)

Output Current Limits

Output	Absolute Maximum Ratings
PGM1	1.0A
PGM2	1.0A
AUX1	1.5A
AUX2	1.5A
AUX3	1.5A without second boost supply 3.0A with second boost supply
BUS	1.5A
BELL	1.5A

Combined Current Limits

Output	Standby Battery Current UL-1023 Compliant (4 Hour Battery Backup)	Standby Battery Current UL-985 Compliant (24 Hour Battery Backup)
AUX1 AUX2 AUX3 BUS	950mA Combined	150mA Combined

Battery Calculations

Device	QTY	Draw (mA)		Total (mA) (QTY x mA)	
		Standby	Alarm/Max	Standby	Alarm/Max
Touchpad		5mA	350mA		
Keypad		37mA	125mA		
Zone Expander		10mA	15mA		
Output Expander		9mA	63mA		
RE056 Siren		0.3mA	500mA		
Additional Current Loads (Powered Zones, Additional Sirens, Etc.)					
Total Current Draw					

**Battery Calculations are based on a 7AH battery*

IC NOTICE

This device complies with Industry Canada license-exempt RSS standard(s). Operation is subject to the following two conditions:
(1) This device may not cause interference, and
(2) This device must accept any interference, including interference that may cause undesired operation of the device.
Le présent appareil est conforme aux cnr d'Industrie Canada applicables aux appareils radio exempts de licence. L'exploitation est autorisée aux deux conditions suivantes:
(1) L'appareil ne doit pas produire de brouillage, et
(2) L'utilisateur de l'appareil doit accepter tout brouillage radioélectrique subi, même si le brouillage est susceptible d'en compromettre le fonctionnement.
IC: 8310A-CXIPRFZ
Contains IC: 10224A-2020BG95M5

TRADEMARKS

Alula and CONNECT-XIP are trademarks owned by Alula Holdings, LLC. Verizon is a trademark of Verizon Trademark Services LLC. AT&T is a trademark of AT&T Intellectual Property II, L.P. Wi-Fi is a trademark of The Wi-Fi Alliance. Z-Wave is a registered trademark of Silicon Labs.

FCC NOTICE

This device complies with Part 15 of the FCC rules. Operation is subject to the following two conditions:
(1) This device may not cause harmful interference.
(2) This device must accept any interference that may be received, including interference that may cause undesired operation.
Changes or modifications not expressly approved by Alula could void the user's authority to operate this equipment.
FCC ID: U5X-CXIPRFZ
Contains FCC ID: XMR202005BG95M5

FCC Compliance Statement (Class B)

NOTE: This equipment has been tested and found to comply with the limits for a Class B digital device, pursuant to Part 15 of the FCC Rules. These limits are designed to provide reasonable protection against harmful interference in a residential installation. This equipment generates, uses, and can radiate radio frequency energy and, if not installed and used in accordance with the instructions, may cause harmful interference to radio communications. However, there is no guarantee that interference will not occur in a particular installation. If this equipment does cause harmful interference to radio or television reception, which can be determined by turning the equipment off and on, the user is encouraged to try to correct the interference by one or more of the following measures:
Reorient or relocate the receiving antenna.
Increase the separation between the equipment and receiver.
Connect the equipment into an outlet on a circuit different from that to which the receiver is connected.
Consult the dealer or an experienced radio/TV technician for help.
CAUTION: Changes or modifications not expressly approved by the party responsible for compliance could void the user's authority to operate the equipment.

RF Exposure Warning: The antenna(s) used for this transmitter must be installed to provide a separation distance of at least 7.8 in (20cm) from all persons and must not be co-located or operated in conjunction with any other transmitter except in accordance with the FCC and ISED multi-transmitter product procedures.

Specifications

PHYSICAL	
Housing Body Dimensions Weight with Battery Mounting Fastener	14 x 11 x 3 inches (35.6 x 27.9 x 7.62 cm) 5.74 lbs (2.6 kg) #6 or #8 screws (not provided)
ENVIRONMENTAL	
Operating Temperature Maximum Humidity	32 to 120 °F (0 to 49 °C) 85% non-condensing relative humidity
PANEL SPECIFICATIONS	
Radio Frequencies Power Supply Part Number Input Output Battery Specifications Tamper Indications Sensors Interface Devices Touchpad/Keypad Interfaces (BUS and/or Wi-Fi) Maximum Number of Users	433.92MHz, 319.5MHz, 345MHz 2.4GHz, 908.42MHz RE012-20 (US) 100-240VAC, 50/60 Hz, 0.5A 13.5VDC, 3A 12VDC Lead Acid (7AH Suggested) Cover opening and Wall removal with optional RE054 Lock set and Tamper Kit 96 Up to 8 PINPads (RE652), Up to 8 Touchpads (RE667/RE665) and/or Keypads (RE662 100
CERTIFICATIONS	
CONNECT-XIP	UL1023, UL985, UL2610, ULC S304, ULC S545, FCC, IC

FIND THE LATEST MANUAL HERE:

https://alula.com/download/connect-xip/

Connect-XIP Manual • 47-00042-00 RevA • 2026-6-4

Tech Support Line • (888) 88-ALULA • (888) 882-5852
alula.com