MXWneXt

MXW neXt

Shure Microflex Wireless next-generation user manual, for MXW neXt 2 / 4 / 8 systems. Includes APXD2, APX, NDX, microphone transmitters, and control software.

Version: 3.7 (2026-J)

Table of Contents

MXWneXt MXW neXt **4**

Update Firmware **4**

Important Safety Information **4**

Explanation of Symbols 4

Important Safety Instructions 4

Safety and Regulatory Information for Battery Chargers 5

Important Safety Instructions for Listening and IEM Products 5

What is MXW neXt? **6**

Getting Started with MXW neXt 2 **7**

Setting Up Your Hardware 8

Updating Firmware 10

Operation Modes 10

Getting Started with MXW neXt 4/8 **14**

Connecting the Hardware 15

Updating Firmware 17

Associating NDX Bays with APX Audio Channels 17

Linking Microphones 18

Operation Modes 18

APXD2 2-Channel Access Point Dock **22**

Features 23

APXD2 Hardware Callouts 23

APX4/APX8 Access Point **25**

APX Hardware Callouts 26

NDX2/NDX4/NDX4G/NDX8/NDX8G Networked Docking Station **28**

NDX Hardware Callouts 28

MXW neXt Microphone Transmitters **31**

Microphone Hardware Callouts 32

Rechargeable Batteries for MXW neXt Portables 33

Linking MXW neXt Microphones to Channels **35**

Associating Microphones with APX Audio Channels 35

MXW neXt Control Software **35**

Control MXW neXt Devices with Shure Designer Software 35

MXW neXt Web Application 38

MXW neXt® Fusion Mode **51**

How to Set Up Fusion Rooms 51

MXW neXt Fusion Mode Troubleshooting 54

AURACAST™ Broadcast Audio **55**

Add APX Devices to ShureCloud 55

Purchase and Apply Auracast Licenses 55

Using the APX as an Auracast Transmitter 56

Adjust DSP Settings **56**

Acoustic Echo Cancellation 56

Automatic Gain Control (AGC) 57

Noise Reduction 58

MXW neXt System Connection Diagrams **58**

APXD2 Connection Overview 58

APX4/8 Connection Diagrams 60

Configuring Networks with MXW neXt **62**

Networking Best Practices 62

Digital Audio Networking 62

Advanced Setup 70

Using the 802.1X Security Protocol **71**

Set Up the 802.1X Protocol for a Device 71

Choose a Network Mode for 802.1X 72

Turn Off or Clear 802.1X Settings 73
Change 802.1X Settings 73
Troubleshooting 802.1X Setup Issues 73
MAC Authentication Bypass 73

Updating MXW neXt Firmware 73
Firmware Versions and Compatibility 74

Resetting MXW neXt Hardware 74

MXW neXt Model Variations and Accessories 75

MXW neXt Specifications 77
MXW neXt System Specifications 77
MXWAPXD2 2-Channel Access Point Dock Specifications 79
MXWAPX4, MXWAPX8 Access Point Specifications 82
MXWNDX2, MXWNDX4, MXWNDX4G, MXWNDX8, MXWNDX8G Networked Docking Station Specifications 83
Specifications for MXW neXt Transmitters 83

Regulatory Information for Wireless Products Utilizing TV and DECT Frequency Bands 91
Environmental Regulatory Information 95

Certifications 95
Regulatory Model Number (RMN) 95
FCC / IC ID 96
Energy Efficiency 96
Certification and Compliance Markings 96

MXWneXt
MXW neXt

Update Firmware

For the best experience, keep the firmware on your device up to date.

Important Safety Information

Explanation of Symbols

⚠	This symbol indicates that dangerous voltage constituting a risk of electric shock is present within this unit.
⚠	This symbol indicates that there are important operating and maintenance instructions in the literature accompanying this unit.

Important Safety Instructions

1. READ these instructions.
2. KEEP these instructions.
3. HEED all warnings.
4. FOLLOW all instructions.
5. DO NOT use this apparatus near water.
6. CLEAN ONLY with dry cloth.
7. DO NOT block any ventilation openings. Allow sufficient distances for adequate ventilation and install in accordance with the manufacturer's instructions.
8. DO NOT install near any heat sources such as open flames, radiators, heat registers, stoves, or other apparatus (including amplifiers) that produce heat. Do not place any open flame sources on the product.
9. DO NOT defeat the safety purpose of the polarized or grounding type plug. A polarized plug has two blades with one wider than the other. A grounding type plug has two blades and a third grounding prong. The wider blade or the third prong are provided for your safety. If the provided plug does not fit into your outlet, consult an electrician for replacement of the obsolete outlet.
10. PROTECT the power cord from being walked on or pinched, particularly at plugs, convenience receptacles, and the point where they exit from the apparatus.
11. ONLY USE attachments/accessories specified by the manufacturer.
12. USE only with a cart, stand, tripod, bracket, or table specified by the manufacturer, or sold with the apparatus. When a cart is used, use caution when moving the cart/apparatus combination to avoid injury from tip-over.

13. UNPLUG this apparatus during lightning storms or when unused for long periods of time.

14. REFER all servicing to qualified service personnel. Servicing is required when the apparatus has been damaged in any way, such as power supply cord or plug is damaged, liquid has been spilled or objects have fallen into the apparatus, the apparatus has been exposed to rain or moisture, does not operate normally, or has been dropped.
15. DO NOT expose the apparatus to dripping and splashing. DO NOT put objects filled with liquids, such as vases, on the apparatus.
16. The MAINS plug or an appliance coupler shall remain readily operable.
17. The airborne noise of the Apparatus does not exceed 70dB (A).
18. Apparatus with CLASS I construction shall be connected to a MAINS socket outlet with a protective earthing connection.
19. To reduce the risk of fire or electric shock, do not expose this apparatus to rain or moisture.
20. Do not attempt to modify this product. Doing so could result in personal injury and/or product failure.
21. Operate this product within its specified operating temperature range.
22. Follow local regulations and consult qualified personnel if the product installation or relocation requires construction work. Choose mounting hardware and an installation location that can support the weight of the product. Avoid locations subject to constant vibration. Use the required tools to install the product properly. Inspect the product periodically.
23. If your product has a feature to log in, upon first time start up, you must change your password.

WARNING:

- Voltages in this equipment are hazardous to life. No user-serviceable parts inside. Refer all servicing to qualified service personnel. The safety certifications do not apply when the operating voltage is changed from the factory setting.
- If water or other foreign objects enter the inside of the device, fire or electric shock may result.

Note: Use only with the included power supply, batteries, or a Shure-approved equivalent.

Safety and Regulatory Information for Battery Chargers

1. This equipment is intended to be used in professional audio applications.
2. Use this battery charger only with the Shure charging modules and battery packs for which it is designed. Use with other than the specified modules and battery packs may increase the risk of fire or explosion.
3. Changes or modifications not expressly approved by Shure Incorporated could void your authority to operate this equipment.

Important Safety Instructions for Listening and IEM Products

1. If water or other foreign objects enter the inside of the device, fire or electric shock may result.
2. Do not attempt to modify this product. Doing so could result in personal injury and/or product failure.
3. Do not use when a failure to hear your surroundings could be dangerous, such as while driving, or when biking, walking, or jogging where traffic is present and accidents could occur.
4. Keep this product and its accessories out of reach of children. Handling or use by children may pose a risk of death or serious injury. Contains small parts and cords that may pose risk of choking or strangulation.
5. Prior to inserting the earphone, always recheck the sleeve to make sure it is firmly attached to the nozzle to decrease the risk of sleeves detaching from the nozzle and becoming lodged in your ear. If a sleeve becomes lodged in your ear, seek professional medical assistance to remove the sleeve.
6. Stop using the earphones/headphones and consult a medical professional if you experience irritation, excessive wax buildup, or other discomfort.

CAUTION

- Never disassemble or modify the device, as failures may result.
- Do not subject to extreme force and do not pull on the cable or failures may result.
- Keep the earphone dry and avoid exposure to extreme temperatures and humidity.
- If you are currently receiving ear treatment, consult your physician before using this device.

WARNING:

Use, clean, and maintain earphones according to manufacturer's instructions

High sound pressure

Hearing damage risk

To prevent possible hearing damage, do not listen at high volume levels for long periods.

WARNING FOR IN-EAR-MONITORS (IEM product_ONLY)

This device is able to produce sound volume higher than 85 dB SPL. Please check your maximum allowed continuous noise exposure level based on your national employment protection requirements.

WARNING:

LISTENING TO AUDIO AT EXCESSIVE VOLUMES CAN CAUSE PERMANENT HEARING DAMAGE. USE AS LOW A VOLUME AS POSSIBLE. Over exposure to excessive sound levels can damage your ears resulting in permanent noise-induced hearing loss (NIHL). Please use the following guidelines established by the Occupational Safety Health Administration (OSHA) on maximum time exposure to sound pressure levels before hearing damage occurs.

90 dB SPL **at 8 hours**	**95 dB SPL** at 4 hours	**100 dB SPL** at 2 hours	**105 dB SPL** at 1 hour
110 dB SPL **at ½ hour**	**115 dB SPL** at 15 minutes	**120 dB SPL** Avoid or damage may occur	

What is MXW neXt?

MXW neXt is a complete 2-, 4-, or 8-channel solution for meeting room and presentation applications. Developed with Dante® technology by Audinate, digital audio is routed over standard IP equipment across a network of access points, digital-to-analog converters, and computers. Access points add wireless, analog, and USB audio to the network. Docking stations enable microphone linking, recharge microphones without battery removal, and network battery status for remote monitoring. RF coordination is automatic and continuous, offering worry-free wireless audio transmission for every event.

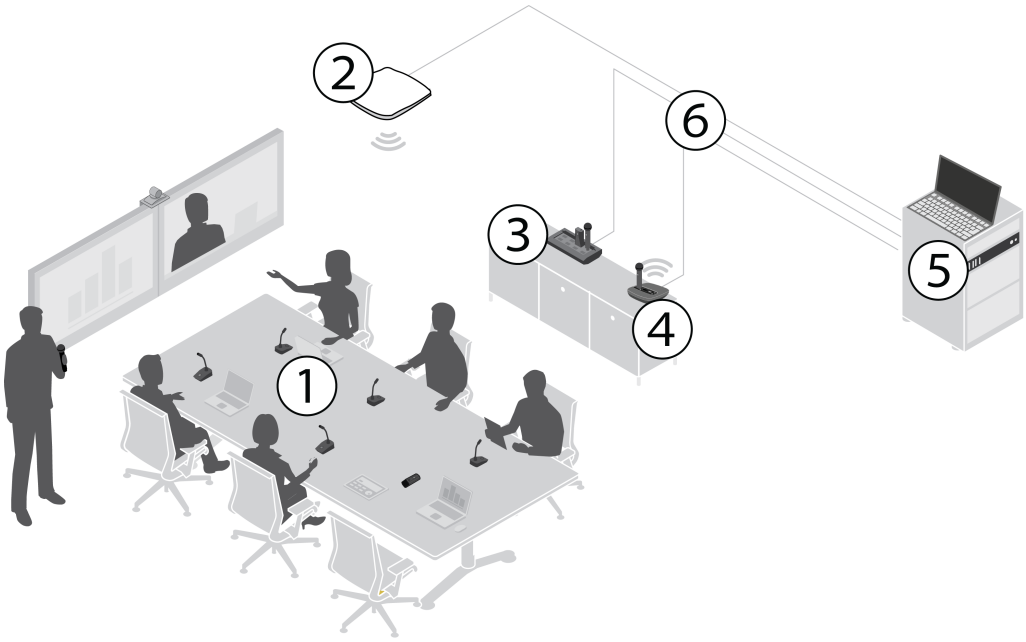

① MXW-X Microphones

Wireless microphones are available in gooseneck, boundary, handheld and bodypack models.

② Access Point Transceiver (APX4 / APX8)

Sleek and unobtrusive, the MXWAPX mounts to a wall or ceiling to provide direct, line-of-sight wireless connection to the microphones. Powered by PoE, the APX features IntelliMix™ DSP functionality, and automatically manages the RF spectrum, ensuring consistent, stable audio transport from the microphones.

③ Networked Docking Station (NDX2 / NDX4 / NDX4G / NDX8 / NDX8G)

The MXWNDX networked docking station enables microphone linking to connected APX access points, recharges microphones without battery removal, updates firmware of docked microphones, and networks battery status for remote monitoring. Docking stations are networkable via Ethernet and powered by USB-C PD.

NDX2, NDX4 and NDX8 are compatible with bodypack, handheld, and boundary microphones, NDX4G and NDX8G are compatible with boundary and gooseneck microphones.

④ "All-In-One" Two Channel Transceiver/Docking Station/DSP (APXD2)

Featuring Dante, USB, and analog audio connections, acoustic echo cancellation (AEC) and Automix technology, wireless microphone linking, and transmitter charging ports, the APXD2 allows for networked or standalone operation.

⑤ Control Software

MXW neXt devices include a built-in web application for device control when networked to a computer, and are compatible with Shure Designer software for comprehensive remote management.

⑥ Connections

Connect directly to audio and videoconferencing devices, as well as monitoring and control software. Use shielded Cat5e cables (or better) and a PoE-capable network switch for best results.

Getting Started with MXW neXt 2

MXW neXt 2 is an all-in-one wireless microphone system featuring the APXD2, which combines a 2-channel wireless transceiver, digital audio processing and two charging bays into a convenient tabletop device. On-board Dante, analog and USB audio connections enable local sound reinforcement and video conferencing applications in either standalone or networked installations. RF coordination is automatic and continuous, offering worry-free wireless audio transmission for every event.

Setting Up Your Hardware

1. Connect the APXD2's power supply to the POWER input on the back of the device and a power source. The LEDs on the front panel will illuminate as the APXD2 turns on.

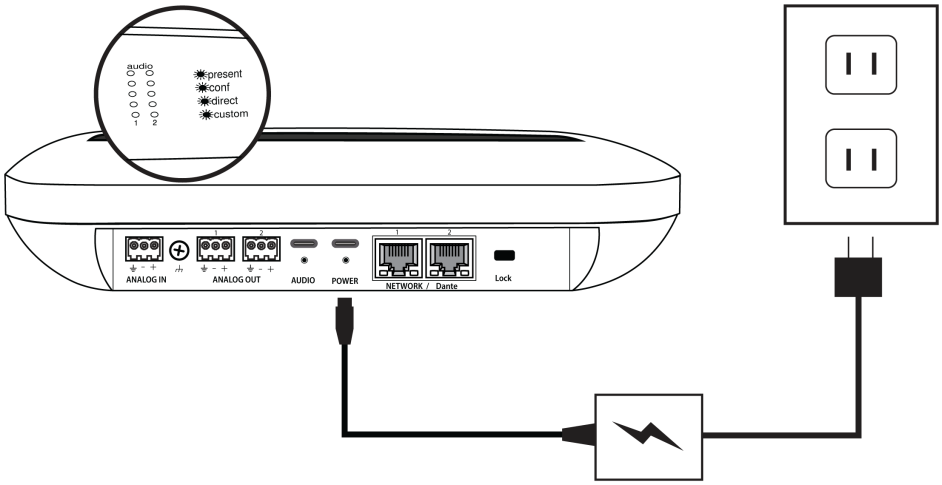

2. When the APXD2 has finished booting up, a single LED will illuminate on the front panel.

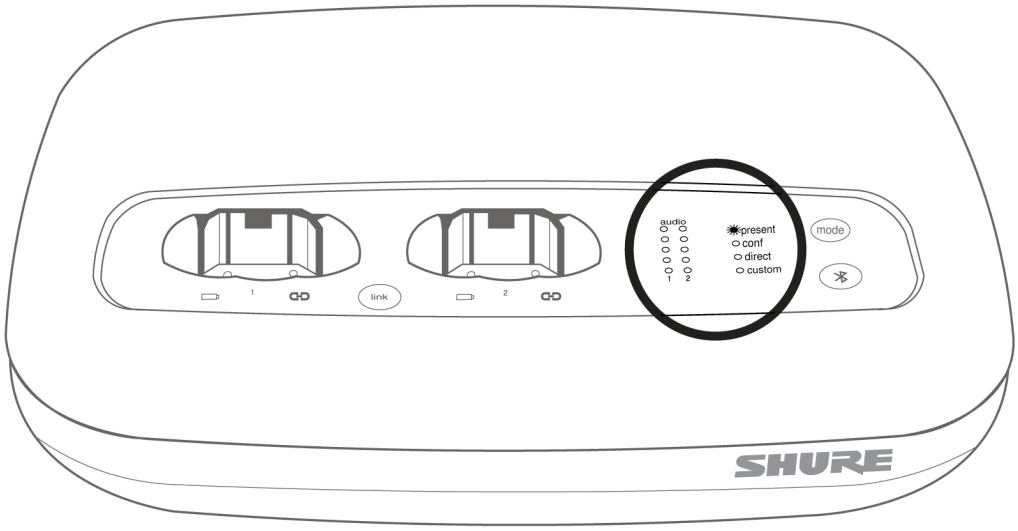

3. Place the microphones in the docking bays of the APXD2. When docked successfully, the microphones will turn on, and the battery LEDs on the APXD2 will illuminate. The microphone displays will also show the charging status.

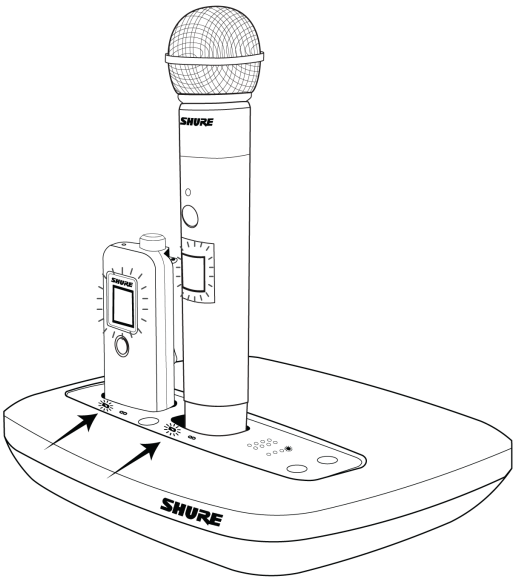

4. To link the microphones to the APXD2, press and hold the link button for approximately 3 seconds. The link LED on the APXD2 will turn solid green when the microphones are linked. The microphones are now linked to the APXD2 channel corresponding to the docking bay each microphone is placed in.

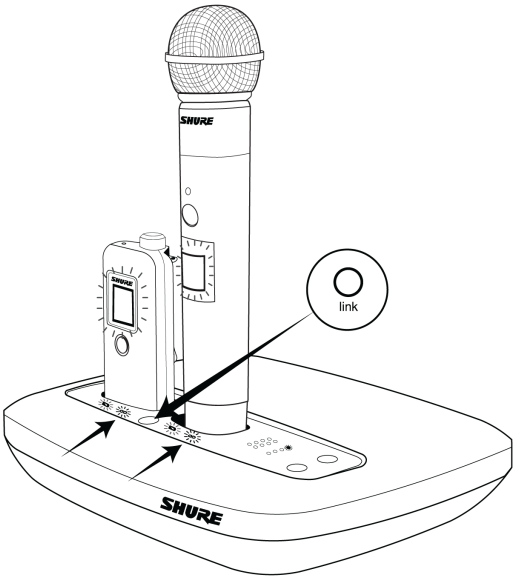

Verify that audio is passing through the system by undocking each microphone and talking into it. The audio meter LEDs on the front panel should light up in response to your voice on each channel.

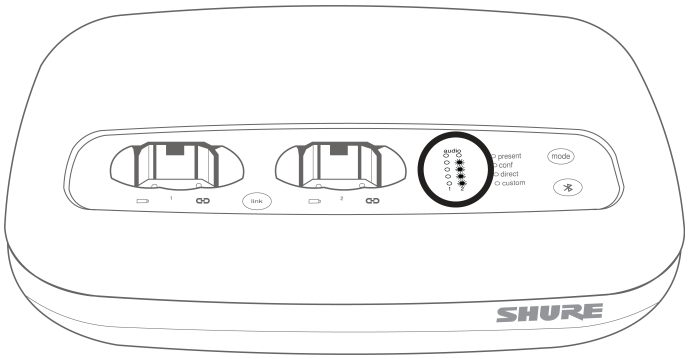

Your MXW neXt 2 system is ready to use.

Updating Firmware

After connecting your hardware to the same Ethernet network on the same local subnet, install the latest firmware update using the Shure Update Utility (www.shure.com/suu). Connect your computer to the same network and subnet, and dock any microphones in your docking station.

CAUTION! Ensure the device has a stable network connection during the update. Do not turn off any device until the update is complete.

Operation Modes

The APXD2 has four operation modes, which change the audio routing and mic muting behavior. To cycle between the different modes, press the Mode button on the front panel of the APXD2.

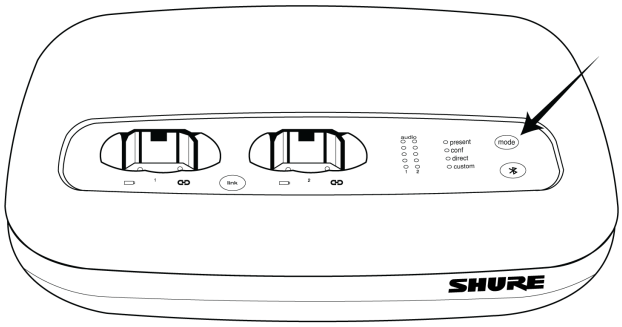

Mode	Details
Presentation	Share your presentation with local sound reinforcement, with a variety of mixed outputs. Automix and AEC are **enabled** Mute behavior options: **Local-Individual:** microphones mute/unmute independently from each other. **Local-All:** all microphones mute/unmute when one microphone mutes/unmutes. **External Mute:** when using external DSP, only the DSP can control muting/unmuting. The switches on the microphones are disabled.

Mode	Details
	3 mixed Dante outputs
Conference	Connect to your preferred videoconferencing software. Automix and AEC are **enabled** Mute behavior is **USB Mute Sync:** mute state is controlled by microphones or external conferencing software and is applied universally to all linked microphones. 3 mixed Dante outputs
Direct	Bypass most DSP and route your audio channels directly. Automixer and AEC are **disabled** Mute behavior options: **Local-Individual:** microphones mute/unmute independently from each other. **Local-All:** all microphones mute/unmute when one microphone mutes/unmutes. **Logic-Follower:** Shure DSP (such as P300 or IntelliMix Room) controls the mute/unmute status. **External:** 3rd-party DSP is the only way to mute/unmute microphones. All MXW neXt wireless microphones output on individual Dante channels
Custom	Set your own audio and routing parameters in the control software. Enable or disable audio sources and DSP options Mute behavior options: **Local-Individual:** microphones mute/unmute independently from each other. **Local-All:** all microphones mute/unmute when one microphone mutes/unmutes. **Logic-Follower:** Shure DSP (such as P300 or IntelliMix Room) controls the mute/unmute status. **External:** 3rd-party DSP is the only way to mute/unmute microphones. Establish input/output routing using the Matrix Mixer **Note:** In Custom mode, no Matrix Mixer crosspoints are pre-selected, and all audio input/output routing is user-selectable.

Audio I/O

Operation mode:
Presentation

	Analog Output 1	Analog Output 2	Dante Output 1	Dante Output 2	Dante Output 3	Dante Output 4	USB Output	Backchannel	AEC Reference
Mic Input 1 (Direct)	☑	☐	☑	☐	☐	☐	☐	☑	☐
Mic Input 2 (Direct)	☑	☐	☑	☐	☐	☐	☐	☑	☐
Analog Input (Direct)	☑	☐	☑	☐	☐	☐	☐	☑	☐
Automix	☐	☐	☐	☐	☑	☐	☑	☐	☐
Dante Input 1	☐	☐	☐	☐	☑	☐	☑	☑	☐
Dante Input 2	☑	☑	☑	☑	☐	☐	☐	☑	☑
USB Input	☑	☑	☑	☑	☐	☐	☐	☑	☑

Operation mode:
Conference

	Analog Output 1	Analog Output 2	Dante Output 1	Dante Output 2	Dante Output 3	Dante Output 4	USB Output	Backchannel	AEC Reference
Mic Input 1 (Direct)	☑	☐	☑	☐	☐	☐	☐	☑	☐
Mic Input 2 (Direct)	☑	☐	☑	☐	☐	☐	☐	☑	☐
Analog Input (Direct)	☑	☐	☑	☐	☐	☐	☐	☑	☐
Automix	☐	☐	☐	☐	☑	☐	☑	☐	☐
Dante Input 1	☐	☐	☐	☐	☑	☐	☑	☑	☐
Dante Input 2	☑	☑	☑	☑	☐	☐	☐	☑	☑
USB Input	☑	☑	☑	☑	☐	☐	☐	☑	☑

Operation mode: **Direct**	Analog Output 1	Analog Output 2	Dante Output 1	Dante Output 2	Dante Output 3	Dante Output 4	USB Output	Backchannel	AEC Reference
Mic Input 1 (Direct)	☑	☐	☑	☐	☐	☐	☑	☑	☐
Mic Input 2 (Direct)	☐	☑	☐	☑	☐	☐	☑	☑	☐
Analog Input (Direct)	☐	☐	☐	☐	☑	☐	☑	☑	☐
Automix	☐	☐	☐	☐	☐	☑	☐	☐	☐
Dante Input 1	☐	☐	☐	☐	☐	☐	☐	☑	☐
Dante Input 2	☐	☐	☐	☐	☐	☐	☐	☑	☐
USB Input	☐	☐	☐	☐	☐	☐	☐	☑	☐

Audio Inputs

	Presentation Mode	Conference Mode	Direct Mode
Mic Input 1 & 2 (Direct)	Direct audio input from corresponding microphone		
Analog Input (Direct)	Direct audio input from analog audio source	Direct audio input from analog audio source Can be configured as AEC reference	Direct audio input from analog audio source
Automix	Audio source created internally by the automixer		
Dante Input 1	Dante-enabled audio source		
Dante Input 2	Dante videoconference connection Receive audio from participants of a video call		Dante-enabled audio source
USB Input	Can connect to far-end output of videoconferencing system via USB audio connection.		Audio input from any USB audio source

Audio Outputs

	Presentation Mode	Conference Mode	Direct Mode
Analog Output 1	Full audio mix Sound reinforcement for local mics Hear participants of a video conference		Direct audio output from Mic 1

	Presentation Mode	Conference Mode	Direct Mode
Analog Output 2	Videoconference far end only Hear participants of a video conference		Direct audio output from Mic 2
Dante Output 1	Full audio mix Sound reinforcement for local mics Hear participants of a video conference		Direct audio output from Mic 1
Dante Output 2	Videoconference far end only Hear participants of a video conference		Direct audio output from Mic 2
Dante Output 3	Local mix only Send local audio from automixer to far-end participants		Direct audio output from Analog Input
Dante Output 4	N/A		Direct audio output from Automixer
USB Output	Local mix only Send local audio from automixer to far-end participants		Matrix mix output from Mic 1, Mic 2, and Analog In
Backchannel	Enhanced listening to all audio (for accessibility, etc.) Available on each microphone using USB-C audio		
AEC Reference	Far end only Reference for echo cancelling algorithm	Far end + Analog input* Reference for echo cancelling algorithm Analog reference audio (e.g. speakers used for far-end audio)	Dante-enabled audio source

* Analog input usage is set from the Inputs tab of the control software

Getting Started with MXW neXt 4/8

MXW neXt 4 and MXW neXt 8 are complete solutions for meeting room and presentation applications. The MXW neXt access point (APX) adds analog, wireless, USB audio, and Dante digital audio by Audinate to your installation, allowing you to route audio over standard IP equipment across a network of access points, digital-to-analog converters, and computers. RF coordination is automatic and continuous, offering worry-free wireless audio transmission for every event.

Connecting the Hardware

1. Connect the APX's RJ45 Port 1 to a Power over Ethernet (PoE) capable network switch to turn on the device. The LEDs on the front panel illuminate as the APX turns on.

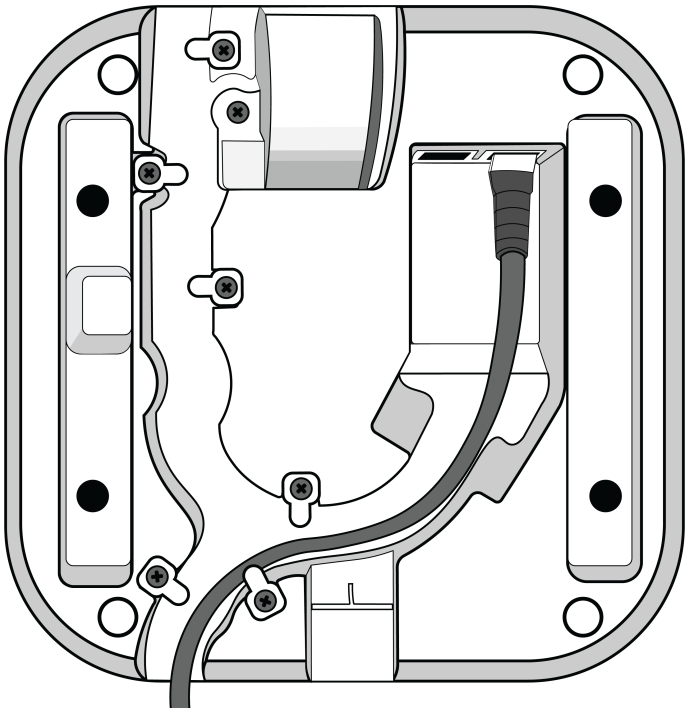

2. When the APX has finished booting up, the Power and System LEDs light up green, and the Link LED lights up yellow.

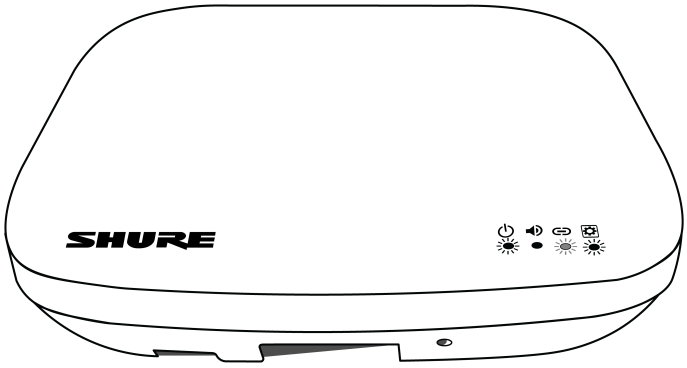

3. Connect the NDX’s power supply to the USB-C connector on the back of the unit. Plug the power supply into the wall. Then press and hold the power button until the Power LED on the top face lights up. When the NDX has finished booting, the Power LED remains green and the link LEDs for each docking bay light up yellow.

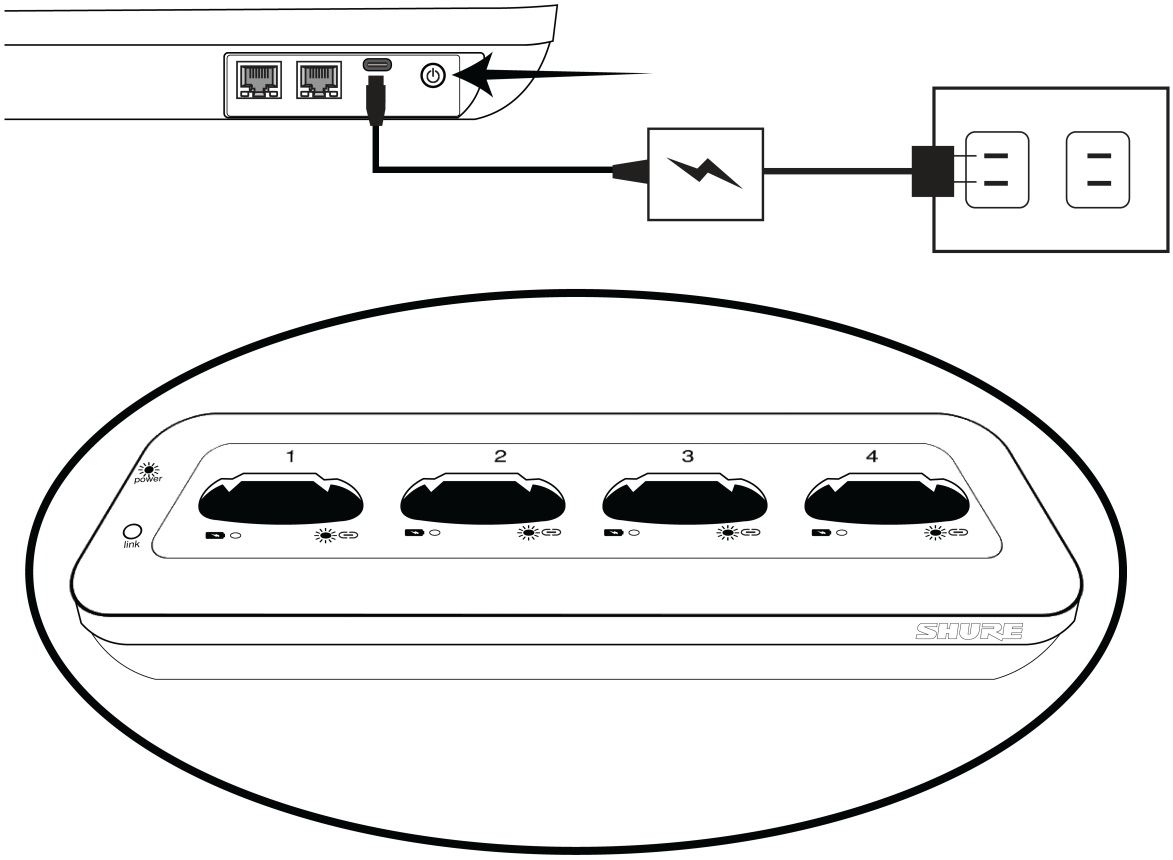

4. Place microphones in the docking bays of the NDX. When docked successfully, the microphones will turn on, and the battery LEDs on the NDX will illuminate. The microphone displays will also show the charging status.

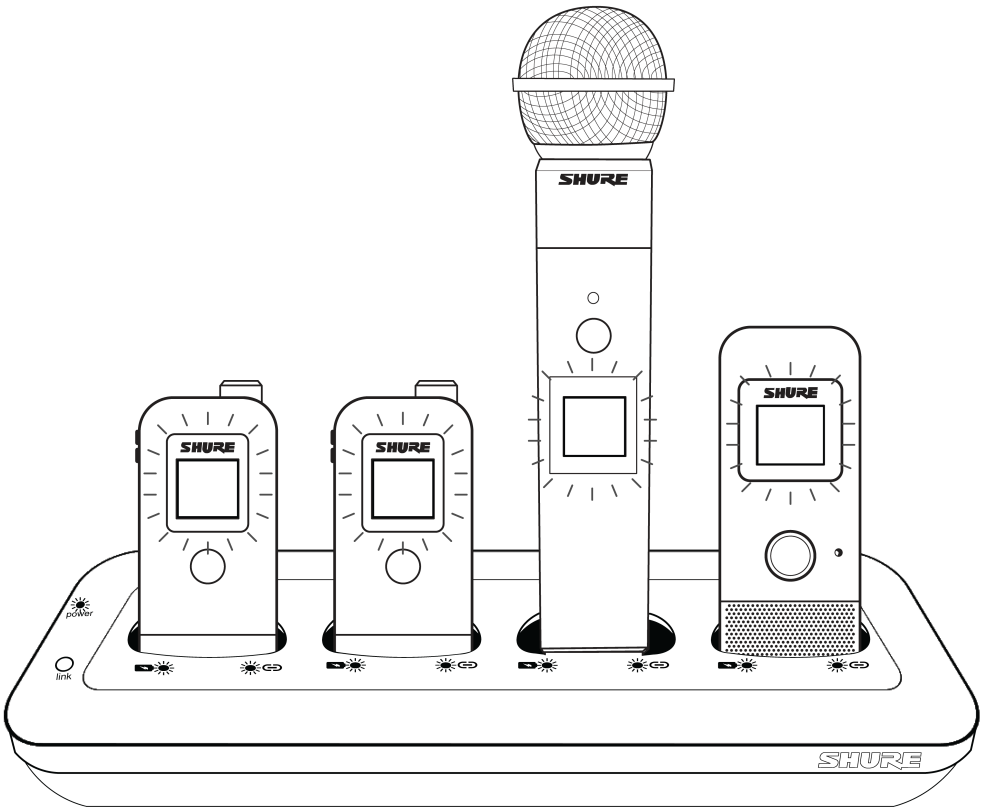

Updating Firmware

After connecting your hardware to the same Ethernet network on the same local subnet, install the latest firmware update using the Shure Update Utility (www.shure.com/suu). Connect your computer to the same network and subnet, and dock any microphones in your docking station.

CAUTION! Ensure the device has a stable network connection during the update. Do not turn off any device until the update is complete.

Associating NDX Bays with APX Audio Channels

NDX bays charge docked microphones and, when associated with an audio channel on the APX, can Link a wireless microphone to that APX audio channel.

Before mics can be wirelessly linked to the APX, the APX needs to know which NDX it should communicate with when linking mics. This can be done using Shure Designer or, when a single APX and a single NDX are connected to a local subnet, by simply long-pressing the Link button on the NDX.

1. Connect your APX and NDX to the same Ethernet network on the same local subnet.

   Important: Make sure no other APXs and NDXs are connected on the same network. The association will fail if another APX is on the same subnet.

   Tip: One way to easily do this is to connect both devices to a dedicated switch (making sure the port connected to the APX supports PoE).

2. Press and hold the Link button on the NDX until Link LEDs on the NDX and the APX flash yellow, and then rapidly flash yellow. Release the button. If the association is successful, the Link LEDs on both devices turn off.

The charging bays in the NDX are now associated with the matching wireless audio channel on the APX

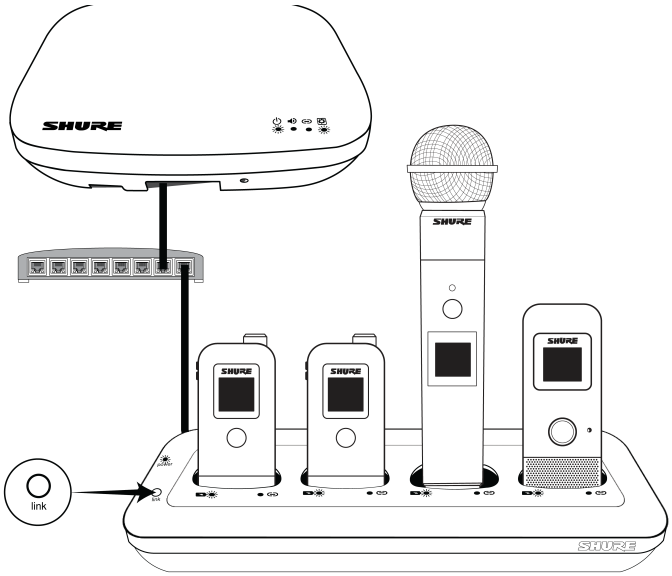

Linking Microphones

Note: This must be done *after* associating NDX bays with APX channels.

1. With microphones docked in the NDX, press and hold the Link button on the NDX for approximately 3 seconds. The link LEDs on the NDX will slowly blink green.
2. Once the LEDs start blinking rapidly, release the Link button. Once the mics are linked, the Link LEDs on the APX and NDX will be solid green.

The mics are now linked to the APX on the APX channel corresponding to the docking bay that the mic was linked in, and your MXW neXt 4/8 system is ready to pass audio.

Operation Modes

The APX has four operation modes, which change the audio routing and mic muting behavior. To change between the different operation modes:

1. Open the Shure Update Utility on a connected computer and double-click the APX's IP address to open the device web application.
2. Create or enter a device password (if applicable).
3. Use the dropdown menu to set the operation mode.

Mode	Details
Presentation	Share your presentation with local sound reinforcement, with a variety of mixed outputs. Automix and AEC are **enabled** Mute behavior options: **Local-Individual:** microphones mute/unmute independently from each other. **Local-All:** all microphones mute/unmute when one microphone mutes/un-mutes.

Mode	Details
	External Mute: when using external DSP, only the DSP can control muting/unmuting. The switches on the microphones are disabled. 3 mixed Dante outputs
Conference	Connect to your preferred videoconferencing software. Automix and AEC are **enabled** Mute behavior is **USB Mute Sync:** mute state is controlled by microphones or external conferencing software and is applied universally to all linked microphones. 3 mixed Dante outputs
Direct	Bypass most DSP and route your audio channels directly to individual Dante outputs. Automixer and AEC are **disabled** Mute behavior options: **Local-Individual:** microphones mute/unmute independently from each other. **Local-All:** all microphones mute/unmute when one microphone mutes/unmutes. **Logic-Follower:** Shure DSP (such as P300 or IntelliMix Room) controls the mute/unmute status. **External:** 3rd-party DSP is the only way to mute/unmute microphones. All wireless mics output on individual Dante channels
Custom	Set your own audio and routing parameters in the control software. Enable or disable audio sources and DSP options Mute behavior options: **Local-Individual:** microphones mute/unmute independently from each other. **Local-All:** all microphones mute/unmute when one microphone mutes/unmutes. **Logic-Follower:** Shure DSP (such as P300 or IntelliMix Room) controls the mute/unmute status. **External:** 3rd-party DSP is the only way to mute/unmute microphones. Establish input/output routing using the Matrix Mixer **Note:** In Custom mode, no Matrix Mixer crosspoints are pre-selected, and all audio input/output routing is user-selectable.

Audio I/O

Operation mode:
Presentation

	Analog Output	Dante Output 1	Dante Output 2	Dante Output 3	Dante Output 4	Dante Output 5	Dante Output 6	Dante Output 7	Dante Output 8	USB Output	Backchannel	AEC Reference
Mic Input 1 (Direct)	☑	☑	☐	☐	☐	☐	☐	☐	☐	☐	☑	☐
Mic Input 2 (Direct)	☑	☑	☐	☐	☐	☐	☐	☐	☐	☐	☑	☐
Mic Input 3 (Direct)	☑	☑	☐	☐	☐	☐	☐	☐	☐	☐	☑	☐
Mic Input 4 (Direct)	☑	☑	☐	☐	☐	☐	☐	☐	☐	☐	☑	☐
Mic Input 5 (Direct)	☑	☑	☐	☐	☐	☐	☐	☐	☐	☐	☑	☐
Mic Input 6 (Direct)	☑	☑	☐	☐	☐	☐	☐	☐	☐	☐	☑	☐
Mic Input 7 (Direct)	☑	☑	☐	☐	☐	☐	☐	☐	☐	☐	☑	☐
Mic Input 8 (Direct)	☑	☑	☐	☐	☐	☐	☐	☐	☐	☐	☑	☐
Automix	☐	☐	☐	☑	☐	☐	☐	☐	☐	☑	☐	☐
Dante Input 1	☐	☐	☐	☑	☐	☐	☐	☐	☐	☑	☑	☐
Dante Input 2	☑	☑	☑	☐	☐	☐	☐	☐	☐	☐	☑	☑
USB Input	☑	☑	☑	☐	☐	☐	☐	☐	☐	☐	☑	☑

Operation mode:
Conference

	Analog Output	Dante Output 1	Dante Output 2	Dante Output 3	Dante Output 4	Dante Output 5	Dante Output 6	Dante Output 7	Dante Output 8	USB Output	Backchannel	AEC Reference
Mic Input 1 (Direct)	☐	☑	☐	☐	☐	☐	☐	☐	☐	☐	☑	☐
Mic Input 2 (Direct)	☐	☑	☐	☐	☐	☐	☐	☐	☐	☐	☑	☐
Mic Input 3 (Direct)	☐	☑	☐	☐	☐	☐	☐	☐	☐	☐	☑	☐
Mic Input 4 (Direct)	☐	☑	☐	☐	☐	☐	☐	☐	☐	☐	☑	☐
Mic Input 5 (Direct)	☐	☑	☐	☐	☐	☐	☐	☐	☐	☐	☑	☐
Mic Input 6 (Direct)	☐	☑	☐	☐	☐	☐	☐	☐	☐	☐	☑	☐
Mic Input 7 (Direct)	☐	☑	☐	☐	☐	☐	☐	☐	☐	☐	☑	☐
Mic Input 8 (Direct)	☐	☑	☐	☐	☐	☐	☐	☐	☐	☐	☑	☐
Automix	☐	☐	☐	☑	☐	☐	☐	☐	☐	☑	☐	☐
Dante Input 1	☐	☐	☐	☑	☐	☐	☐	☐	☐	☑	☑	☐
Dante Input 2	☑	☑	☑	☐	☐	☐	☐	☐	☐	☐	☑	☑
USB Input	☑	☑	☑	☐	☐	☐	☐	☐	☐	☐	☑	☑

Operation mode: **Direct**	Analog Output	Dante Output 1	Dante Output 2	Dante Output 3	Dante Output 4	Dante Output 5	Dante Output 6	Dante Output 7	Dante Output 8	USB Output	Backchannel	AEC Reference
Mic Input 1 (Direct)	☑	☑	☐	☐	☐	☐	☐	☐	☐	☑	☑	☐
Mic Input 2 (Direct)	☑	☐	☑	☐	☐	☐	☐	☐	☐	☑	☑	☐
Mic Input 3 (Direct)	☑	☐	☐	☑	☐	☐	☐	☐	☐	☑	☑	☐
Mic Input 4 (Direct)	☑	☐	☐	☐	☑	☐	☐	☐	☐	☑	☑	☐
Mic Input 5 (Direct)	☑	☐	☐	☐	☐	☑	☐	☐	☐	☑	☑	☐
Mic Input 6 (Direct)	☑	☐	☐	☐	☐	☐	☑	☐	☐	☑	☑	☐
Mic Input 7 (Direct)	☑	☐	☐	☐	☐	☐	☐	☑	☐	☑	☑	☐
Mic Input 8 (Direct)	☑	☐	☐	☐	☐	☐	☐	☐	☑	☑	☑	☐
Automix	☐	☐	☐	☐	☐	☐	☐	☐	☐	☐	☐	☐
Dante Input 1	☐	☐	☐	☐	☐	☐	☐	☐	☐	☑	☑	☐
Dante Input 2	☑	☐	☐	☐	☐	☐	☐	☐	☐	☑	☑	☑
USB Input	☑	☐	☐	☐	☐	☐	☐	☐	☐	☐	☑	☐

Audio Inputs

	Presentation Mode	Conference Mode	Direct Mode
Mic Input 1-4* / 1-8† (Direct)	Direct audio input from corresponding microphone		
Automix	Audio source created internally by the automixer		
Dante Input 1	Summed with the Automix input and sent to Dante Output 3 or USB Output Intended for adding other near-end audio to the automix output		Audio input from Dante device
Dante Input 2	Intended for far-end audio, as an alternative to USB input		Audio input from Dante device
USB Input	Intended for far-end output of videoconferencing system via USB audio connection.		Audio input from any USB audio source

Audio Outputs

	Presentation Mode	Conference Mode	Direct Mode
Analog Output	Full audio mix Sound reinforcement for local mics	Far end audio only Hear remote participants in a video conference	Sum of all Mic Inputs + Dante Input 2 + USB Input

	Presentation Mode	Conference Mode	Direct Mode
	Hear both local and remote participants in a video conference		
Dante Output 1	Full audio mix Sound reinforcement for local mics Hear participants of a video conference		Direct audio output from Mic Input 1
Dante Output 2	Videoconference far end only Hear participants of a video conference		Direct audio output from Mic Input 2
Dante Output 3	Local mix only Send local audio from automixer to far-end participants		Direct audio output from Mic Input 3
Dante Output 4* / 4-8†	N/A		Direct audio output from corresponding Mic Input
Dante Output 5* / 9†	N/A		Mix of all Mic Inputs
USB Output	Local mix only Send local audio from automixer to far-end participants		Matrix mix output from Mic Inputs and Dante Inputs
Backchannel	Enhanced listening to all audio (for accessibility, etc.) Available on each microphone using USB-C audio		
AEC Reference	Far end only Reference for echo cancelling algorithm		

* APX4

† APX8

APXD2 2-Channel Access Point Dock

MXW neXt 2 is an all-in-one wireless microphone system featuring the APXD2, which combines a 2-channel wireless transceiver, digital audio processing and two charging bays into a convenient tabletop device. On-board Dante, analog and USB audio connections enable local sound reinforcement and video conferencing applications in either standalone or networked installations.

The front panel includes at-a-glance indicators and touch-sensitive buttons to facilitate quick out-of-the-box setup and intuitive system use, without the need for additional screen-based user interfaces. In networked installations, a computer can remotely control and monitor connected units via the built-in network interface.

Features

- Standalone and networked installations
- Front panel user interface for simple setup and intuitive use
- Audio I/O: analog, Dante, USB
- Built-in audio DSP: Automixer, Echo Cancellation, Noise Reduction
- Dual RJ45 ports to separate audio and control traffic (3 modes)
- Two built-in charging bays for wireless microphones

APXD2 Hardware Callouts

Front Panel

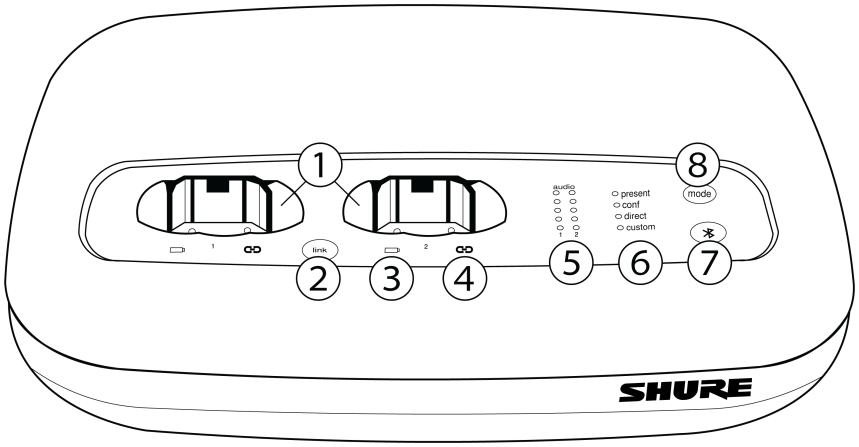

① Docking Bays

Connect and charge up to two MXW neXt handheld, bodypack, or boundary microphones.

② Link Button

Press and hold to link docked microphones. Microphones are successfully linked when the link LED stops flashing and the microphone display confirms successful link.

Note: *Pressing the Link button when mics are present in the charging bays will overwrite any previously-linked microphones.*

③ Battery LED

Indicates charging status for docked microphone.

④ Link Indicator LED

Illuminates when the audio channel associated with the charging bay is linked to a wireless transmitter (even if linked transmitter is powered off).

⑤ Audio Signal Strength LED (sig/clip)

Indicates audio signal strength for each channel:

- Green = Normal
- Amber = Strong
- Red = Clipping (to eliminate clipping, attenuate the signal level at the audio source)

Note: *The bottom LED for each channel indicates the status of the connected microphone, e.g. Green = active, Red = mute, Off = inactive*

⑥ Mode Indicator

Shows the selected preset mode.

⑦ Bluetooth Button

Flashes while Auracast licenses are being applied, and turn solid when Auracast is active.

⑧ Mode Selector

Selects a preset operation mode:

Mode	Details
Presentation	Share your presentation, with the option of adding a third audio source Automix and AEC are enabled A wired microphone can be connected to the line-level analog input for a three-mic setup
Conference	Connect to your preferred videoconferencing software Automix and AEC are enabled If far-end audio is connected directly from the VC device to a loudspeaker (e.g. via HDMI to a room TV), connecting the analog audio input to the loudspeaker's analog audio signal provides reference audio for internal echo cancellation
Direct	Bypass most DSP and route your audio channels directly (Automix and AEC are disabled)
Custom	Set your own audio parameters in the control software Enable or disable audio sources and DSP options Establish input/output routing using the Matrix Mixer

Back Panel

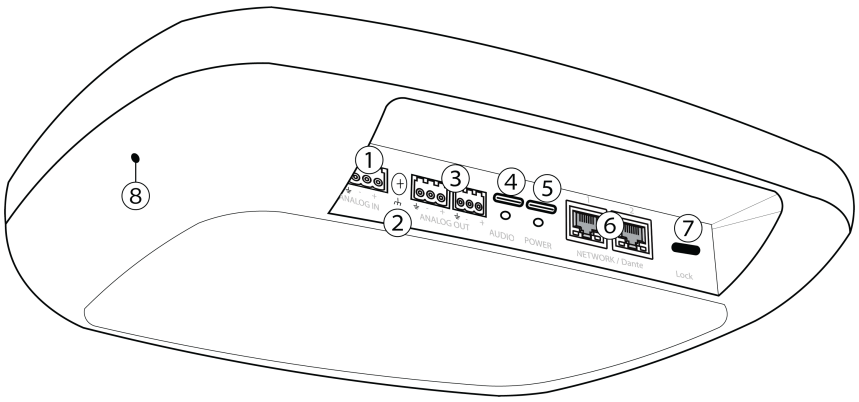

① Analog Audio Input

Balanced* audio input connects to an analog audio device. Set the analog input level to match the output level of the analog device.

Input sensitivity:

Line (+4 dBu)

Aux (-10 dBV)

② Chassis Ground Screw

Provides an external connection point to the chassis ground of the device.

③ Analog Audio Output

Balanced* audio output connects to a signal processor, amplifier, or recording system. OUT1 provides the full mix (all audio inputs), OUT2 provides mix-minus (far-end audio inputs only, minus local audio).

④ Locking USB-C Audio Connector

Connect to a laptop, videoconferencing unit, or control device.

⑤ Power Connector

Locking USB-C power connector. To ensure reliable operation of the product, use only with the included 5V 3A power supply, or a Shure-approved equivalent.

If any other power supply is used, a continuous, stabilized supply of minimum 5V 3A is required for reliable operation.

⑥ Ethernet Ports

Connect to Dante audio network, external control software.

⑦ Kensington Lock Connection Point

Provides a secure anchor for attaching an anti-theft security cable.

⑧ Reset Button

Press and hold for 5-8 seconds to reset network settings.

Press and hold for more than 8 seconds to reset the device to factory default settings.

***** For unbalanced connections, only use pins 1 (signal) and 3 (ground) of the block connector.

APX4/APX8 Access Point

MXW neXt APX4 and APX8 access points feature 4 or 8 wireless audio channels, on-board analog, Dante, and USB-C audio connections, and IntelliMix functionality. Integration with additional MXW neXt hardware enables all-in-one monitoring and control tailored to your specific application. Integration with additional MXW neXt hardware and Shure Designer software enables all-in-one monitoring and control tailored to your specific application.

APX Hardware Callouts

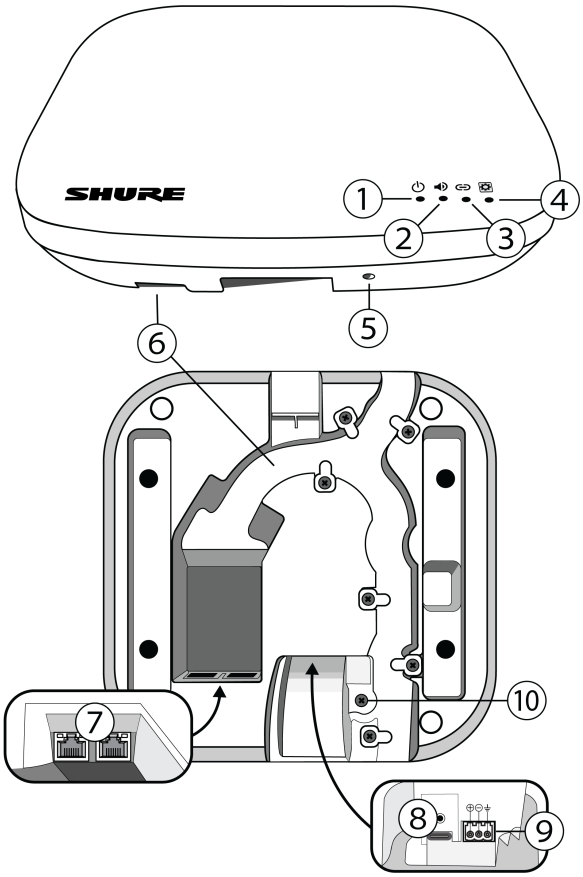

① Power LED

Indicates power status and system states, including system reset.

② Audio OUT LED

Indicates when any of the audio outputs is carrying an active audio signal.

③ Link LED

Indicates link status of wireless microphones.

④ System LED

Indicates whether the device is operating normally.

⑤ Reset Button

Press and hold for 5-8 seconds to reset network settings.

Press and hold for more than 8 seconds to reset the device to factory default settings.

⑥ Cable Routing Path

Provides a path for Ethernet cables to enable a flush-mount to the ceiling or wall.

(Recommended mounting screws: PA4 × 10)

⑦ RJ45 Connectors

Compatible with Ethernet connections (switched, split, or redundant networking) and Dante audio devices. Port 1 provides PoE input to power the APX.

⑧ Locking USB-C Audio Connector

Supports USB audio input and output.

⑨ Analog Audio Output

Block connector for a balanced analog audio signal.

⊕ (Audio +)

⊖ (Audio -)

⏚ (Audio ground)

⑩ Chassis Ground Screw

Provides an external connection point to the chassis ground of the device.

APX LED Behavior

Customize LED behavior from `Settings` > `Lights`.

Event	Event State	LED	
Boot	In progress		Green
	Complete		Green
	Error		Red
Firmware update	In progress		Red-Amber-Green (Cycle)
Reset	In progress (network)		Amber (Flash)
	In progress (factory)		Green (Flash)
NDX association	Unassociated		Amber
	In progress		Amber (Strobe) Turns off when complete
	Association error		Red (Flash)
Identify	In progress		Amber (Flash)
Audio metering	In progress		Dynamic
Link/Unlink microphone	In progress		Green (Strobe)

Event	Event State	LED	
	Complete (Link)		Green
	Complete (Unlink)		Off
	Link error		Red (Flash)
Spectrum scan	In progress		Red/Green (Cycle)

NDX2/NDX4/NDX4G/NDX8/NDX8G Networked Docking Station

NDX2/4/8 and NDX4G/8G networked docking stations can charge 2, 4, or 8 transmitters without removing the battery, link microphones to wireless audio channels on associated access points, and share battery status with networked control software. Integration with additional MXW neXt hardware enables all-in-one monitoring and control tailored to your specific application. Integration with additional MXW neXt hardware and Shure Designer software enables all-in-one monitoring and control tailored to your specific application.

NDX2, NDX4 and NDX8 are compatible with bodypack, handheld, and boundary microphones, NDX4G and NDX8G are compatible with boundary and gooseneck microphones.

NDX Hardware Callouts

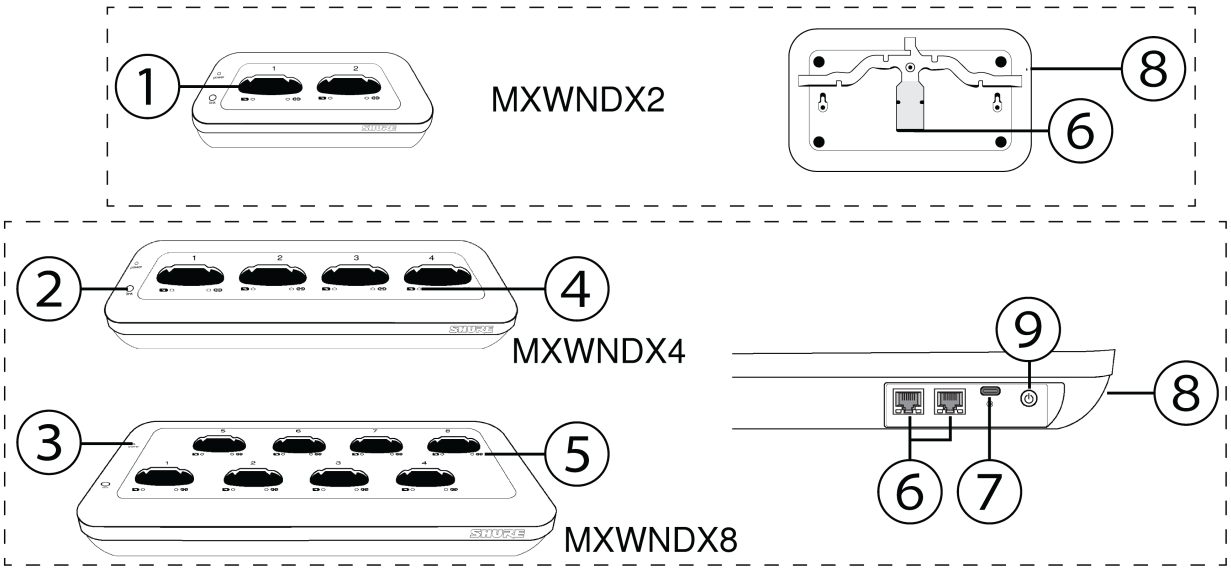

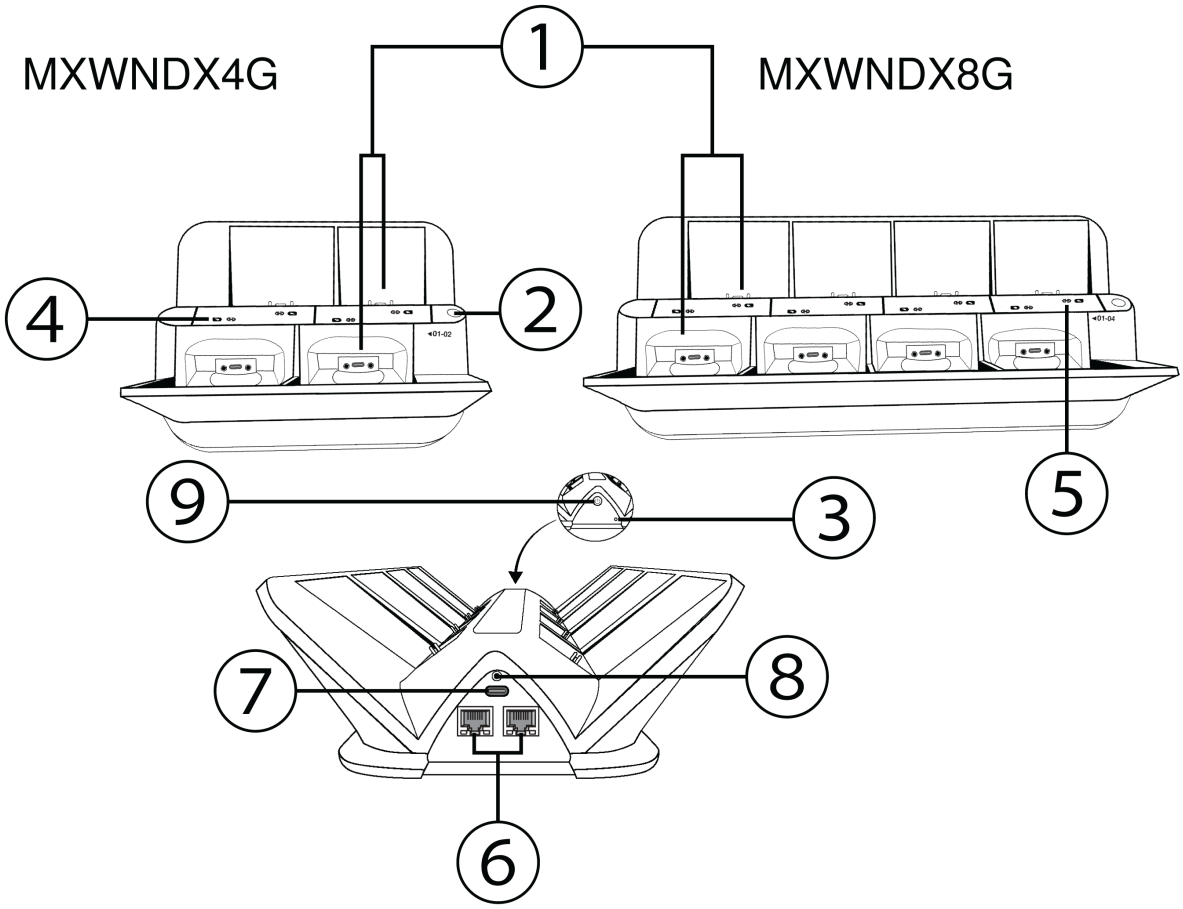

① Docking Bays

Connect and charge MXW neXt microphones:

- NDX2 / NDX4 / NDX8: 2, 4 or 8 handheld, bodypark, or boundary microphones
- NDX4G / NDX8G: 4 or 8 boundary or gooseneck microphones

② Power LED

Indicates that the networked docking station is connected and powered on.

③ Link Button

Press and hold to link docked microphones. Microphones are successfully linked when the link LED stops flashing and the microphone display confirms successful link.

Note: *Pressing the* Link *button when mics are present in the charging bays will overwrite any previously-linked microphones. Lock the Link button from the Settings pane of the control software.*

④ Battery LED

Indicates charging status for docked microphone.

⑤ Link Indicator LED

Indicates whether a bay is associated with an audio channel, and whether a microphone is linked to that channel.

⑥ Ethernet Port(s)

Connect to an access point to associate charging bays with wireless audio channels and enable advanced monitoring and control. Daisy-chain up to 5 networked networked docking stations to reduce Ethernet port requirements and cabling.

Note: *The single Ethernet port on NDX2 devices provides both Power over Ethernet (PoE) and networking capability. NDX2 units must be placed at the end of any daisy-chain networks.*

⑦ Power Connector

Locking USB-C power input. To ensure reliable operation of the product, use only with the included USB-C PD power supply, or a Shure-approved equivalent. *(Does not apply to NDX2)*

Note: *If any other power supply is used, a USB-C PD supply that can output 15V 3A is required for reliable operation.*

⑧ Reset Button

Press and hold for 5-8 seconds to reset network settings.

Press and hold for more than 8 seconds to reset the device to factory default settings.

⑨ Power Button

Powers NDX4, NDX8, NDX4G and NDX8G docking stations on or off.

Note: *Button state persists through device power cycle.*

NDX LED Behavior

Customize LED behavior from `Settings` > `Lights`.

Event	Event State	LED	
Boot	In progress		Green
	Complete		Green
	Error		Red
Firmware update	In progress		Red-Amber-Green-Amber (Cycle)
Reset	In progress (network)		Amber (Flash)
	In progress (factory)		Green (Flash)
Charge mics	In progress		Red-Amber-Green (Charge status)
Identify	In progress		Amber (Flash)
APX association	Unassociated		Amber
	In progress		Amber (Strobe)

Event	Event State	LED	
			Turns off when complete
	Association error	☐	Red (Flash)
Link/Unlink microphone	In progress	☐	Green (Strobe)
	Complete (Link)	☐	Green
	Complete (Unlink)	☐	Off
	Link error	☐	Red (Flash)

MXW neXt Microphone Transmitters

MXW neXt microphones transmit an encrypted, wireless audio signal to the access point. Four form factors are available:

Hybrid Bodypack (MXW1X)

The bodypack secures to a belt or strap for hands-free, mobile communication. It features a TQG input for lavalier connection and an integrated omnidirectional microphone.

Handheld (MXW2X)

The handheld enables presenters to communicate using legendary Shure SM58, SM86, BETA58 and VP68 microphone cartridges.

Boundary (MXW6X/C, MXW6X/O)

The boundary transmitter sits on a table or desk to transmit speech while discreetly blending into any conference environment.

Desktop Gooseneck Base (MXW8X)

The gooseneck base is compatible with 5", 10", and 15" Microflex gooseneck microphones.

To charge a gooseneck base using an APXD2, use a USB cable to connect the charging port of the microphone to the USB plug in the docking bay.

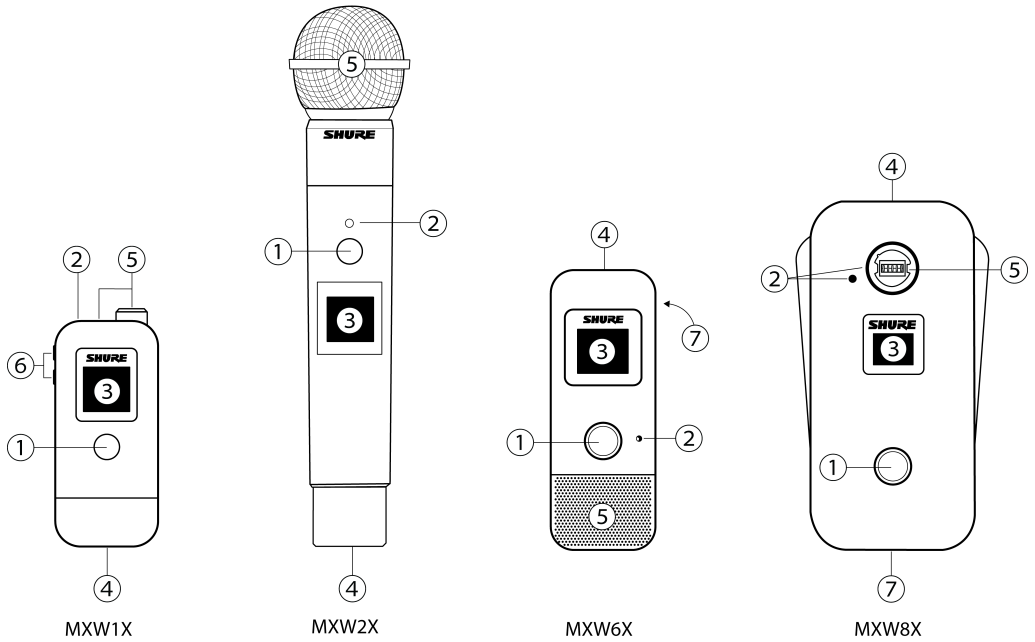

Microphone Hardware Callouts

① Mute/Active Button

Changes the audio status from Active to Mute, or Mute to Active. Button behavior for some transmitter types can be set independently from the Preferences tab of the control software.

Note: *For MXW1X and MXW2X, press and hold the Mute/Active button for 5 seconds to turn the transmitter off. Short press the Mute/Active button to turn the transmitter on.*

② Status LED

Indicates the transmitter's status. The color indicators for Mute and Active can be customized from the Preferences tab. See the Status LED table for the default LED behavior for MXW neXt transmitters.

Note: *Gooseneck microphones have either an LED ring at the base, or an additional LED at the top. These can be configured independently to indicate additional status information.*

③ Display

Shows receiver and transmitter settings and information, including battery and RF status, microphone and base unit name, and menu options.

④ USB-C Connector

Connects to the docking station or USB charger. Can be used with the Shure AMXWX-USBC-3.5mm adapter dongle to provide a headphone output.

⑤ Microphone

MXW1X hybrid bodypack has a TQG connector for an external lavalier or headset microphone, as well as an internal microphone.

MXW2X handheld transmitter is compatible with SM58, Beta 58, SM86, and VP68 cartridges.

MXW6X features an internal microphone, available with cardioid or omnidirectional microphone cartridges.

MXW8X gooseneck base is compatible with 5", 10", and 15" Microflex gooseneck microphones.

⑥ + / - Buttons (MXW1X)

Adjusts the MXW1X back-channel audio volume when a headphone is connected. Also selects between internal and external microphone: press and hold both buttons, use the + / - to select the desired input on the display, then press and hold both buttons to confirm selection.

⑦ Power On/Off (MXW6X, MXW8X)

Press and hold the dedicated power button for 3 seconds to turn the transmitter on or off.

Note: *For MXW1X and MXW2X, press and hold the Mute/Active button for 5 seconds to turn the transmitter off. Short press the Mute/Active button to turn the transmitter on.*

MXW-X Microphone LED Behavior

Status	LED	Description
Active	Green*	Ready to pass audio to network.
Mute	Red*	Audio is muted.
Initializing / acquiring RF channel	Red / Green (Alternating)	The transmitter is initializing and acquiring the RF connection to the linked access point. Standard density mode has a slow alternating rate. High density mode has a fast alternating rate.
Out of range	Red (Flash)	The transmitter is outside the RF coverage range of the linked access point.
Charging	Off	The transmitter is charging.
Off	Off	No connection to the network. The transmitter must be turned on using the power button on the mic.

* Default behavior. Customize LED behavior from `Settings` > `Lights`.

Rechargeable Batteries for MXW neXt Portables

MXW neXt lithium-ion rechargeable batteries use advanced chemistry that maximizes transmitter runtime. Power management from the control software provides detailed visibility to critical battery parameters such as charge status and battery life.

Battery: SB906

- **Transmitter:** MXW1X bodypack
- **Transmitter:** MXW6X boundary

Battery: SB908

- **Transmitter:** MXW2X handheld
- **Transmitter:** MXW8X gooseneck base

Charge Status LEDs

Each docking bay has a Charge LED that illuminates to indicate the charging status for the docked microphone:

Charging Status LEDs

Color	State
Green	>4 hours of runtime
Yellow	2-4 hours of runtime
Red	<2 hours of runtime
Off	Microphone is not inserted into the charging bay, or power supply is not connected

Additional LED states are defined under NDX LED Behavior.

Maximizing Battery Life

While the rechargeable Li-Ion batteries for MXW1X and MXW6X transmitters are designed to last up to 17 hours or more on a charge, and MXW2X up to 39 hours, variance in battery health and use-case may result in significant differences in battery runtime. Specifically, consistency and overall runtime decrease with the number of charge cycles. Battery health of 80% or less is an indicator that a battery is nearing or at the end of its designated life cycle and should be replaced. Health percentage and number of charge cycles are available from the Settings tab of the MXW neXt control software.

High Density Mode

High Density (HD) mode reallocates system resources to create additional channels when needed. In applications where latency and back-channel audio monitoring aren't major considerations, switching to HD mode can also provide up to an hour of additional battery runtime.

Density mode is set from the Settings tab of the MXWAPX control software.

Battery Replacement

Lithium Ion Batteries experience a linear reduction in capacity. Shure recommends establishing a battery replacement schedule customized to the client requirements and replacing batteries when the capacity is no longer acceptable.

Important: After installing a new battery, reset the battery health statistics that are stored in the microphone following the steps in Reset the Microphone Battery Statistics in the previous section.

MXW1X, MXW6X, MXW8X Battery Replacement

1. Unscrew and open the battery door on the bottom of the transmitter.
2. Remove battery by gently disconnecting the battery connector from the transmitter.
3. Connect the replacement battery's connector to the transmitter.
4. Replace the battery with the label facing out.
5. Close the door and tighten the screw.
6. Dispose of batteries properly. Check with your local vendor for proper disposal of used batteries.

MXW2X Battery Replacement

MXW2X batteries should be replaced by qualified service personnel only.

Linking MXW neXt Microphones to Channels

Place an MXW neXt microphone transmitter into a connected docking bay and press the Link button. This links the microphone to the audio channel associated with that docking bay.

- MXW neXt 4- and 8-channel systems use associated NDX networked docking stations to establish the link between the microphone transmitter and the APX audio channel.
- MXW neXt 2 systems automatically associate the bay number with the corresponding audio channel number.

To exchange transmitters, follow the same procedure: place the new transmitter in the docking bay that corresponds to the desired channel and press the Link button. This maps the new transmitter to that channel, overwrites any previously-established Links.

Note: Lock the Link button from the Settings pane of the control software.

Note: If a docking bay is empty during the Link procedure, that channel remains unaffected. This means a devices on one channel can be exchanged without interrupting the audio on the active channel.

Associating Microphones with APX Audio Channels

Before linking microphones in MXW neXt 4/8 systems, associate NDX docking bays with corresponding APX audio channels. This can be done using Shure Designer software, or, when a single APX and a single NDX are connected to a local subnet, by long-pressing the Link button on the NDX.

The LEDs on the NDX indicate association status:

- Amber (solid): Bay is not associated with an APX audio channel.
- Amber (flashing): Association in progress.
- Off: Bay is associated with an audio channel, but no microphone is linked.
- Green: Associated audio channel is linked to a microphone.

MXW neXt Control Software

There are 2 ways to control MXW neXt systems:

- **Option 1:** Use Shure Designer software
  - Control all Shure devices in one place
  - Route audio to and from Shure devices
- **Option 2:** Access the MXW neXt web application with Shure Update Utility
  - Control 1 device at a time
  - Route audio with Dante Controller software

Control MXW neXt Devices with Shure Designer Software

To control this device's settings, use Shure Designer software. Designer enables integrators and system planners to design audio coverage for installations using MXW neXt systems and other Shure networked devices.

To access your device in Designer:

1. Download and install Designer on a computer connected to the same network as your device.
2. Open Designer, and check that you're connected to the correct network in `File` > `Designer preferences`.
3. Click Online devices. A list of online devices appears.
4. To identify devices, select a device and click ID in the Properties menu. Double-click the device to open the settings.

From here, you can add devices to rooms and route audio to other Shure devices. Learn more at shure.com/designer.

Note: Designer support for MXW neXt is restricted to online rooms.

Designer Setup Example

This example uses Designer to connect an MXWNDX4 and an MXWAPX8 in an Online Room. The process is similar when using other combinations of devices in Designer, so use these steps as a starting point.

After completing this basic setup process, you should be able to:

- Discover the MXWAPX and MXWNDX in Designer
- Adjust DSP settings and route audio
- Understand the basic workflow for working with devices in Designer

This example uses:

- Cat5e (or better) Ethernet cable (shielded cable recommended)
- Network switch or computer that provides Power over Ethernet (PoE)
- Shure Designer software installed on a computer (download at shure.com/designer)

Step 1: Install and Connect

1. Install the devices in your room. Connect the MXWAPX Port 1 to PoE, and connect Port 2 to the MXWNDX using Ethernet cables.

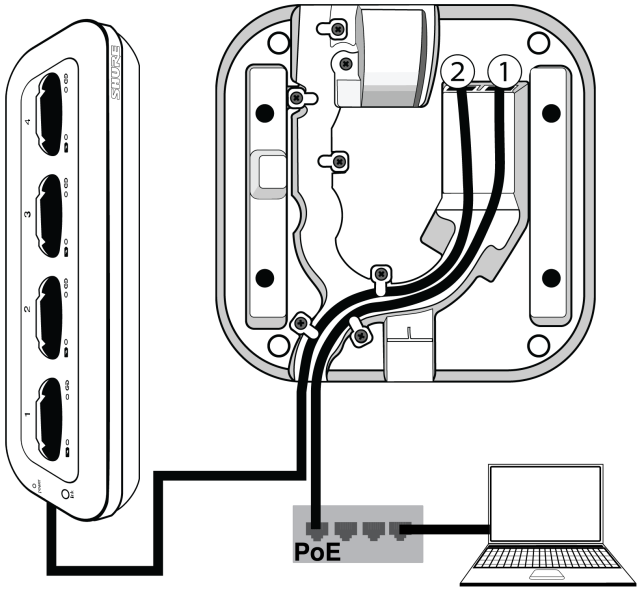

2. Connect your computer running Designer to the same network as your devices.
3. Open Designer. Check that you're connected to the correct network in `File` > `Designer preferences`.
4. Click `File` > `New online room` and drag your devices into the online room.

Step 2: Route Audio

The easiest way to route audio and apply DSP is with Designer's auto route feature. This feature automatically routes audio signals, applies DSP settings, turns on mute synchronization, and enables LED control for connected devices.

1. Select Auto route. Designer will route occupied MXWNDX docking bays with the corresponding MXWAPX audio channels.

   You can also route audio manually in Designer or with Dante Controller.

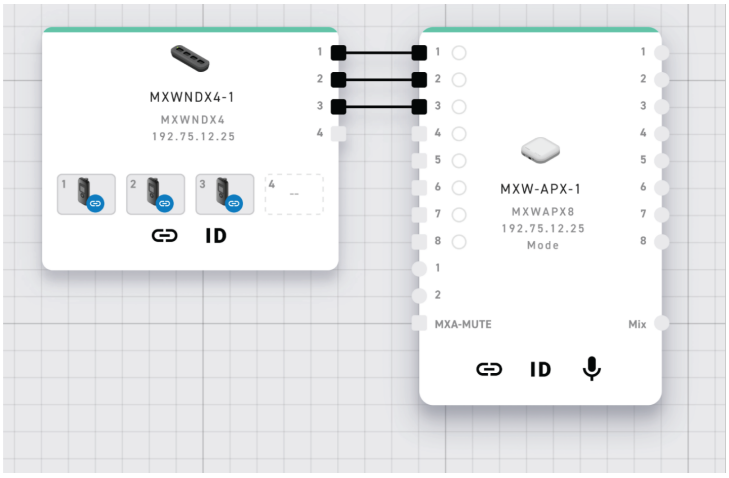

2. Check the audio routes, matrix mixer routes, and other settings to make sure they fit your needs. You might need to:
   - Delete unnecessary routes.
   - Verify that AEC reference signals are correctly routed.
   - Fine-tune DSP blocks as needed.
   - Check matrix mixer routes.
3. Send audio from the APX to other sources using the matrix mixer. A common destination is a computer connected by USB with videoconferencing software.
4. Select Deploy and connect to send device settings to your installed online devices. Designer walks you through associating the design devices with the online devices.
5. Add coverage, if needed.
   - Go to `[Your room]` > `Coverage`
   - Select your device and go to `Properties` > `Coverage` > Add `coverage`.

Use Designer's Auto Route

Designer's auto route speeds up the process of connecting systems with 1 audio processor and at least 1 microphone. Auto route also creates mute control routes in rooms with MXA network mute buttons. When you select Auto route, you can direct Designer to:

- Create audio routes and mute control routes
- Adjust audio settings
- Turn on mute synchronization
- Enable LED logic control for applicable devices

The settings are optimized for your particular combination of devices. You can adjust settings further, but auto route gives you a good starting point. Auto route works with any device in Designer.

To use auto route:

1. Place all relevant devices in a design.
2. Select Auto route. Designer optimizes microphone and DSP settings for your equipment combination.

   If you remove or add devices, select Auto route again.

   Note: The auto route process clears any manual routes you may have made in your design.

After auto routing a room, check and adjust settings to fit your needs. You may need to:

- Delete unnecessary routes.
- Check levels and adjust gain.
- Check that AEC reference signals are correctly routed and received in a test call.
- Fine-tune DSP blocks.
- Adjust your processor's matrix mixer routes.

If you want to auto route an online room, turn on online room editing in `File` > `Designer preferences`.

Note: Changes to an online room may cause audio to briefly drop out.

Refer to Designer's Troubleshooting section for help with routing.

MXW neXt Web Application

The MXW neXt control software allows comprehensive system control and monitoring from a computer. It is hosted from an embedded server in the access point, and is accessible when properly networked to a computer. All hardware functions can be adjusted using this software interface.

When logging in for the first time, you can set a password to restrict access, or choose to continue with no password. Set or change the password from `Settings` > `Permissions`.

Note: For optimal system performance, the control software should not be open to more than seven tabs or windows.

Open the MXW neXt Control Software

Access the MXW neXt control software from any computer on the MXW neXt network. The software is hosted from a webserver embedded in the MXW neXt devices.

1. **Connect your computer to the MXW neXt device**

   The computer accesses the control software from an embedded web server on the device. All networked devices must be connected via Ethernet cable, or wirelessly to the same network (set to the same subnet).

   Note: *For wired connections, turn off the computer's WiFi to force the wired network interface.*

2. **Install and open the Shure Update Utility**

   Download and install the Shure Update Utility from shure.com/SUU. Open the application to view Shure devices on the network that use an embedded server for control software, such as your MXWAPX device. You can use the Identify button to flash a device's LEDs for easy identification.

3. **Open the MXW neXt Control Software**

   From the Shure Update Utility, double-click the IP address of an MXW neXt device to open the MXW neXt System control software. The application can be set to open by IP address or DNS name (selectable from the Preferences drop-down).

4. **Bookmark the Webpage (recommended)**

Bookmark the IP address of the device when it is set to a Static IP address. Bookmark the device's DNS name when the IP mode is set to Automatic (DHCP).

Open the Web Application with HTTPS

This device's browser-based web application uses an HTTPS connection for confidentiality and authenticity. HTTPS encrypts information sent between the device and the web application.

To open the web application:

1. Open Shure Update Utility and check that you're connected to the same network as the device.
2. Double-click the device's IP address to open the web application in your browser.
3. The web application uses self-signed certificates. You may see a warning message in your browser the first time you open the web application. Click Advanced and select the option to trust the connection.

To control HTTPS settings, go to `Settings` > `Services` in the web application.

For more help, refer to our step-by-step video about HTTPS web applications.

Available in firmware 3.0 and newer

MXW neXt Schematic View

The MXW neXt Control Software opens by default to the Schematic view.

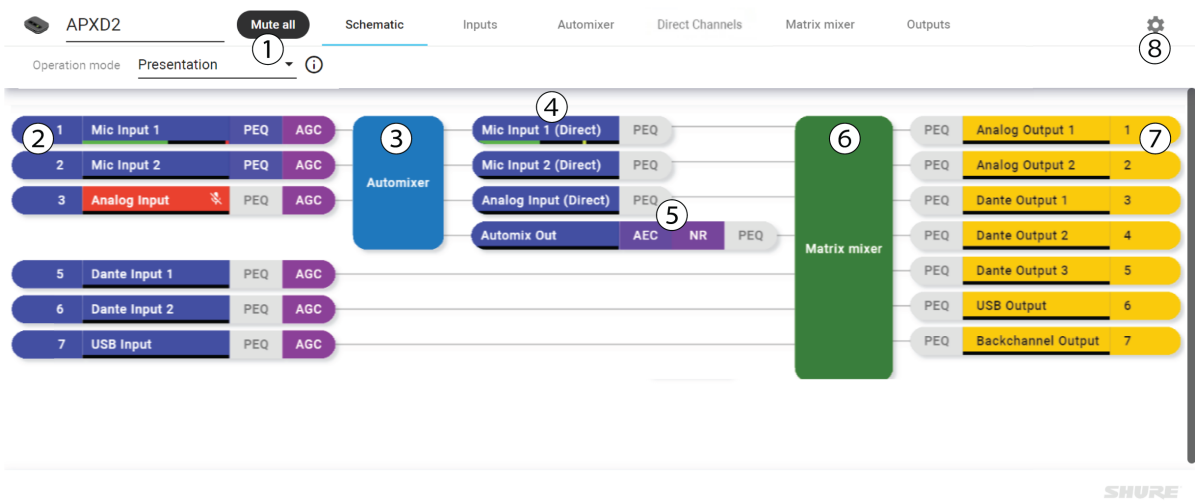

① Global Settings	Mute all channels, change the operation mode, or customize the device name. Identify a device by clicking the logo next to the device name.
② Inputs	The connected input channels, device names, and input digital signal processing (DSP).
③ Automixer	Input channels are routed to the automixer, which gives an additional "automix out" audio track.
④ Direct Channels	Independently adjust gain and mute status from the Direct Channels tab. Allows multiple mixes to be sent to different outputs (e.g. provide sound reinforcement for videoconferencing, while excluding that microphone from the local mix to avoid feedback).

⑤ Digital Signal Processing	Indicates DSP settings applied to the direct channels and automix out.
⑥ Matrix Mixer	Multiple input channels can be routed to multiple output channels.
⑦ Outputs	The available output channel names, numbers, and output DSP.
⑧ Settings	Open the global Settings menu.

MXW neXt Inputs Screen

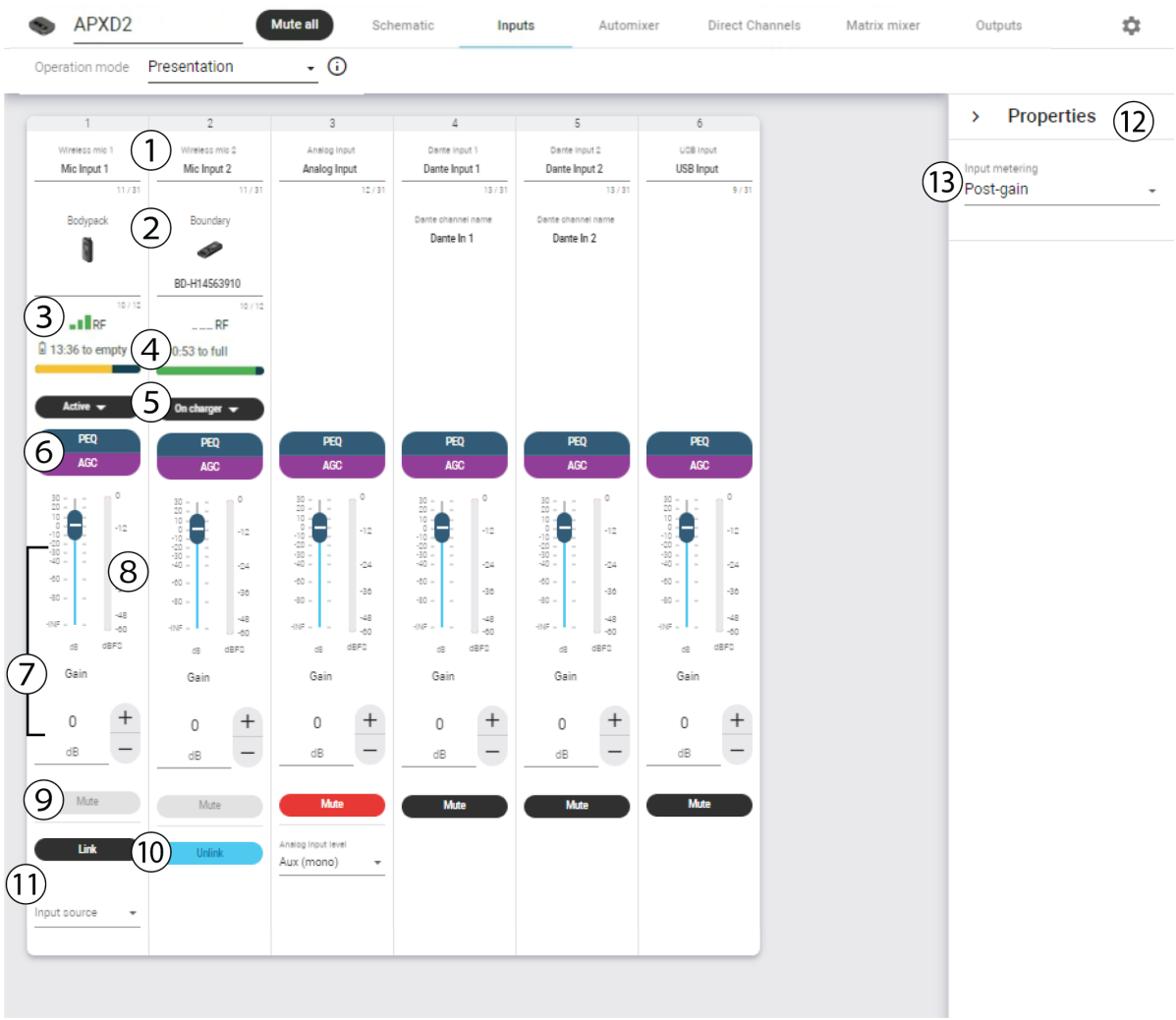

① Input Channel	Shows whether the channel is associated with a wireless, analog, Dante, USB, or return audio source. The channel name is customizable, and is independent from the microphone linked to that channel.
② Microphone Type	Indicates the microphone type and customizable device name.

③ RF Meter	Indicates the average RF signal quality for wireless input devices.
④ Battery Meter	Displays estimated battery information for wireless input devices.
⑤ Channel Status	Select whether connected wireless input devices are active or inactive.
⑥ Digital Signal Processing (DSP)	Configure and apply parametric equalizer (PEQ) and automatic gain control (AGC) to the audio input signal.
⑦ Gain Control	Set the output gain using the slider, or adjust the gain in + / - 0.1 dB increments.
⑧ Audio Output Meter	Indicates the average output signal level.
⑨ Mute	Mute or unmute the audio channel.
⑩ Link / Unlink	Link* or unlink wireless microphones from input channels and determine input source information. * Microphones placed in a docking bay can be linked to the associated channel.
⑪ Input Source	Remotely switch between the internal and external microphone.
⑫ Properties Pane	Expand to view global properties for all output channels.
⑬ Input Metering	Determine whether the input level is measured pre- or post-gain.

Parametric Equalizer (PEQ)

Maximize audio quality by adjusting the frequency response with the parametric equalizer (PEQ). Use the input equalizers to make adjustments to specific channels, while using the output equalizers to adjust frequency response of all signals that are summed through a given output.

Adjust filter settings by manipulating the icons in the frequency response graph or by entering numeric values.

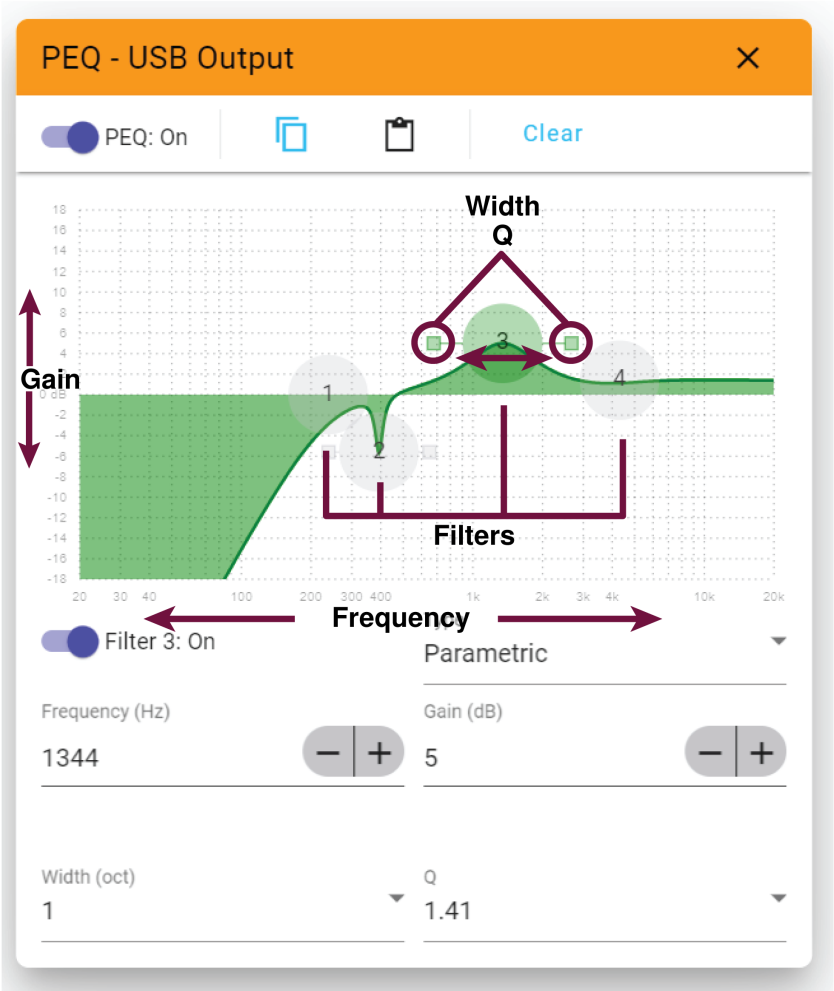

Filter Type

Parametric: Attenuates or boosts the signal within a customizable frequency range

Low Cut: Rolls off the audio signal below the selected frequency

Low Shelf: Attenuates or boosts the audio signal below the selected frequency

High Cut: Rolls off the audio signal above the selected frequency

High Shelf: Attenuates or boosts the audio signal above the selected frequency

Frequency

Select the center frequency of the filter to cut/boost.

Gain

Adjusts the level for a specific filter (+/− 18 dB).

Q

Adjusts the range of frequencies affected by the filter. As this value increases, the bandwidth becomes thinner.

Width

Adjusts the range of frequencies affected by the filter. The value is represented in octaves.

Note: *The Q and width parameters affect the equalization curve in the same way. The only difference is the way the values are represented.*

Automixer

This channel automatically mixes the audio from all selected channels to a single output. Customize settings to fit your installation under the Properties pane.

To use the automix channel:

1. Check that Mute is turned off for all channels. Any channels muted on the Automixer tab are excluded from the mix.
2. Route the automix channel in Designer or Dante Controller.

MXW neXt Automixer Controls

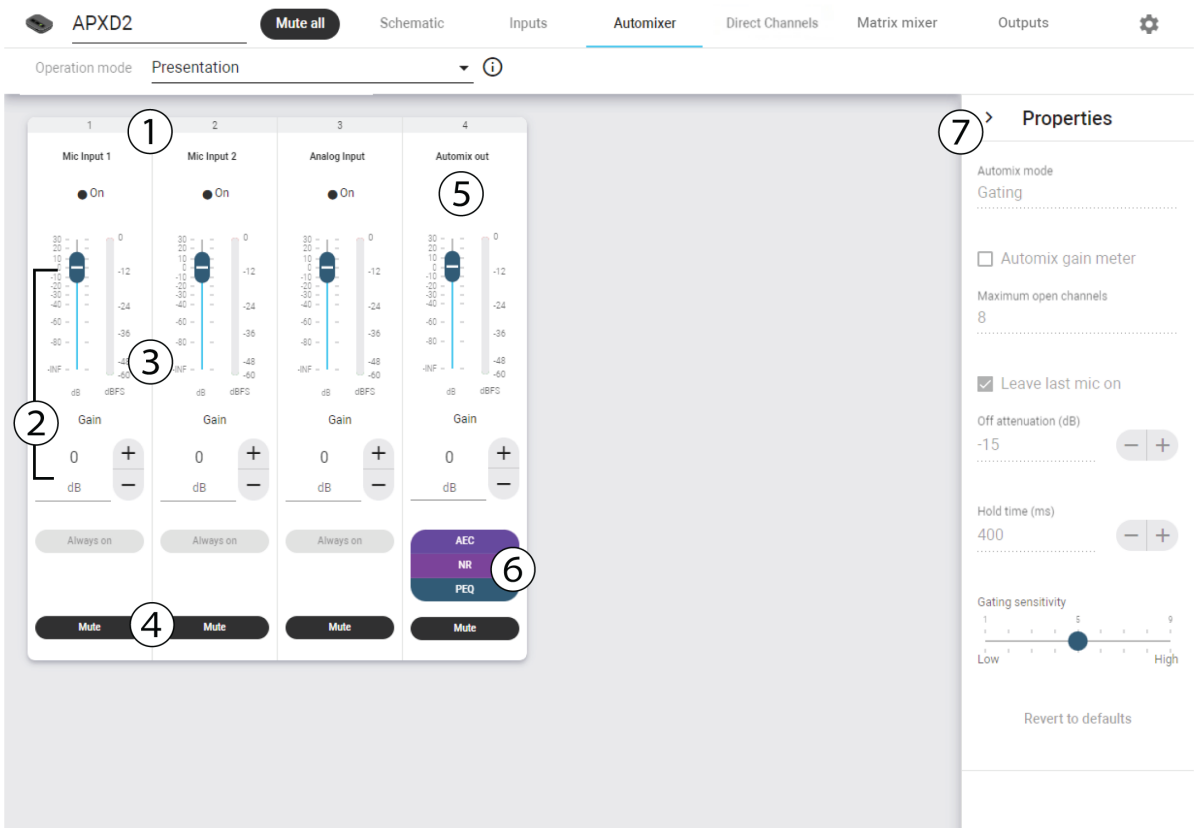

① Input Channel	The channel for the connected input device.
② Gain Control	Set the output gain using the slider, or adjust the gain in + / - 0.1 dB increments.
③ Audio Meter	Indicates the average audio signal.
④ Mute Button	Mutes or unmutes the channel's audio.

⑤ Automix Channel	The automix output channel.
⑥ Output DSP (Digital Signal Processing)	Configure and apply acoustic echo cancellation (AEC), noise reduction (NR) and parametric EQ (PEQ) to the automix output channel.
⑦ Properties Pane	Expand to view global properties for all output channels.

Automix Modes

Select an automix mode under `Automixer` > `Properties`.

Gating

Gating mode delivers fast-acting, seamless channel gating and consistent perceived ambient sound levels. The off attenuation setting is applied to all inactive channels, regardless of the number of active channels.

Gain Sharing

Gain sharing mode dynamically balances system gain between open and closed channels. The system gain remains consistent by distributing gain across channels to equal one open channel. The scaled gain structure helps to reduce noise when there is a high channel count. When fewer channels are used, the off attenuation setting is lower and provides transparent gating.

Manual

Manual mode sums all active tracks and sends the summed signal over a single Dante output. This provides the option to route an individual signal for reinforcement or recording, without enabling automixing. The settings from the faders in the standard monitoring view apply to the summed output.

MXW neXt Direct Channels Tab

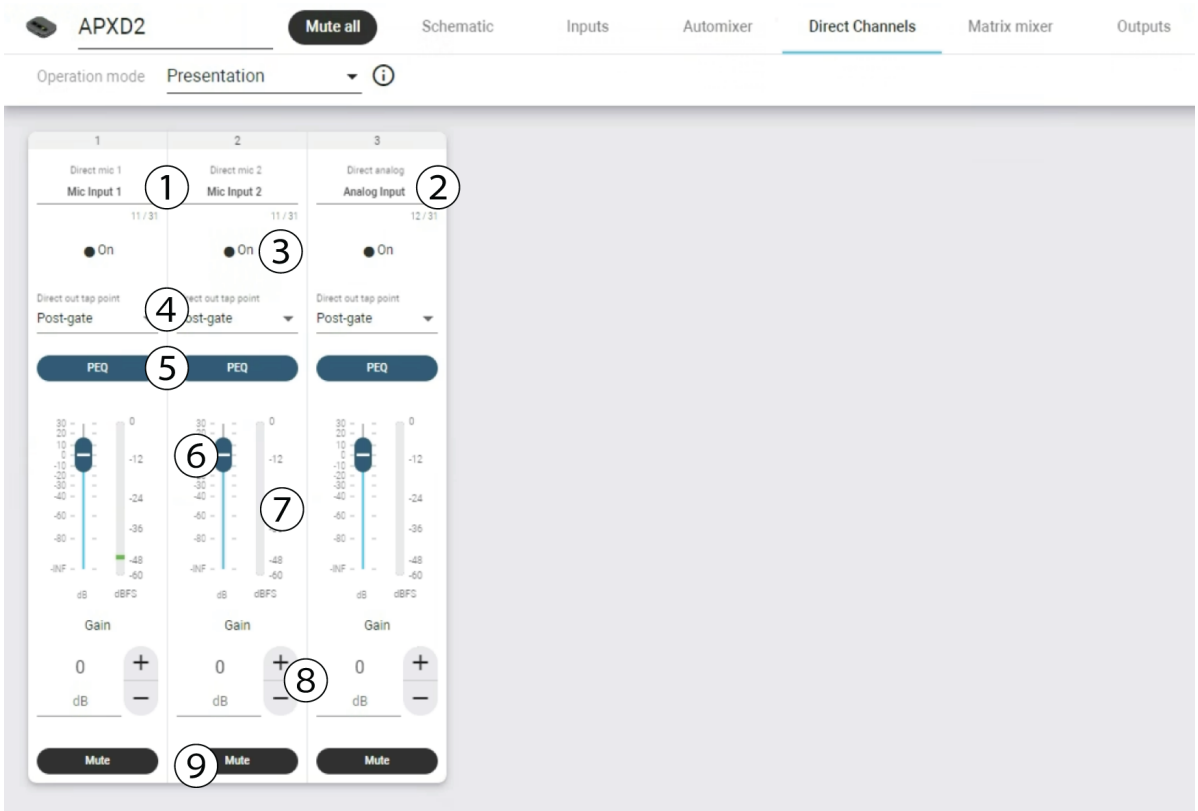

① Direct Input Channels	The channel for the connected MXW neXt microphone.
② Analog Input Channel	The channel for the connected analog input device, if available.
③ Channel Status	Indicates whether the channel is active.
④ Direct Out Tap Point	Determine whether the channel audio is taken Pre-gate (direct audio, no level adjustments) or Post-gate (after Automix level adjustments).
⑤ Input EQ	Configure and apply parametric EQ (PEQ) to input channels.
⑥ Gain Control	Set the output gain using the slider, or adjust the gain in + / - 0.1 dB increments.
⑦ Audio Meter	Indicates the average audio signal.
⑧ Mute Button	Mutes or unmutes the channel's audio.

MXW neXt Audio Outputs

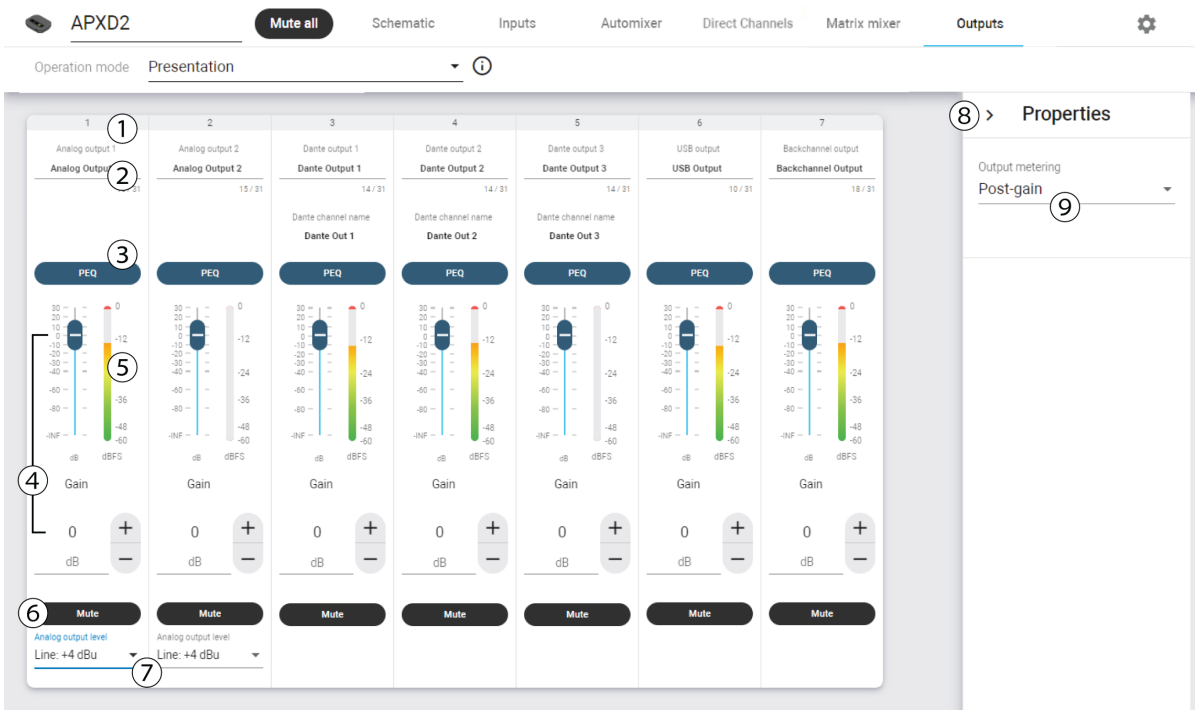

① Output Channel	Shows whether the channel is associated with an analog, Dante, USB, or backchannel output.
② Device Name	Customize device names for RF and Audio channel identification. The name is associated with the channel on the APX, will be stored on it, and is independent from the microphone linked to that channel.
③ Digital Signal Processing (DSP)	Configure and apply parametric equalizer (PEQ) to the output channel.
④ Gain Control	Set the output gain using the slider, or adjust the gain in + / - 0.1 dB increments.
⑤ Audio Output Meter	Indicates the average output signal level.
⑥ Mute	Mute or unmute output channels.
⑦ Analog Output Level	Change the output level for analog audio sources.
⑧ Properties Pane	Expand to view global properties for all output channels.
⑨ Output Metering	Determine whether the output level is measured pre- or post-gain.

Battery Monitoring and Statistics

Use the APX and NDX web apps to manage battery information.

APX Inputs Tab

Use the Inputs tab of the MXWAPX web app to view battery status and remotely control the power setting for connected microphones.

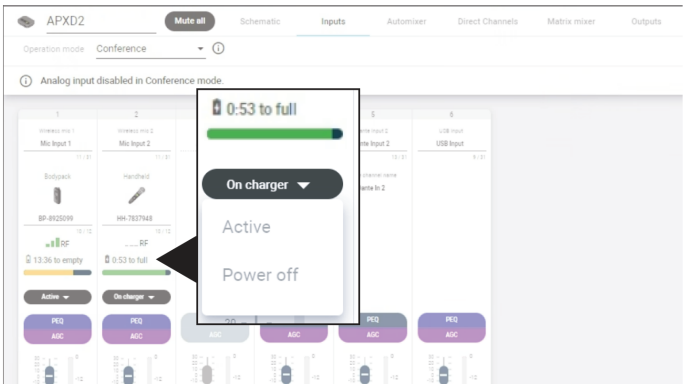

On Charger

Displays the remaining time until the microphone battery is fully charged.

In Use

Displays the remaining battery runtime of the microphone, if available.

NDX Home Screen

Monitor battery and link status for docked microphones from the MXWNDX web app.

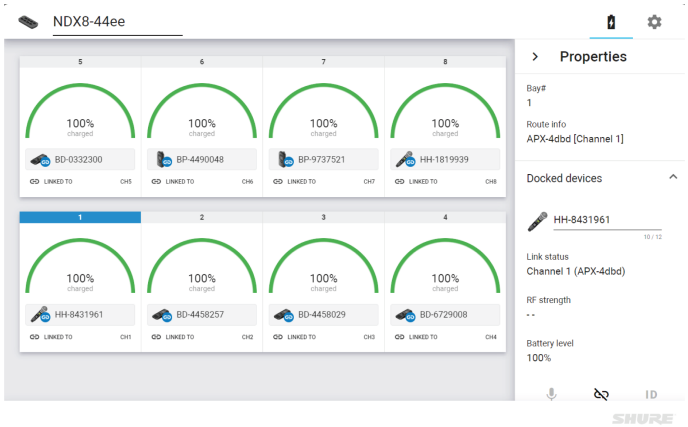

MXW neXt Web App Settings

Open the Settings pane to modify system and device settings, including microphone preferences, IP configuration, audio encryption, cloud connectivity and button/LED behavior, or to factory reset your device.

General Settings

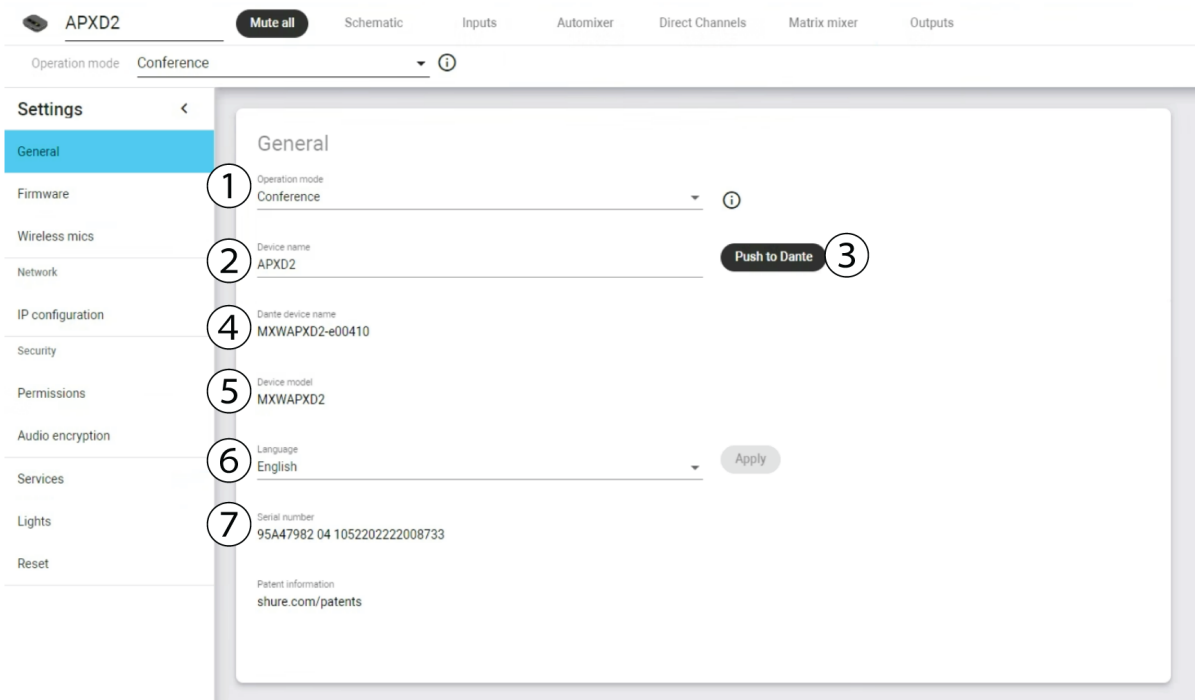

① Operation Mode	Select the preset operation mode: Presentation, Conference, Direct, or Custom.
② Device Name	Device names can be customized with up to 31 characters, except '=','.' or '@'.
③ Push to Dante	Uses the device name from the MXW neXt control software to overwrite the names in the Dante Controller (DC) software by Audinate.
④ Dante Device Name	The current device name as registered in the Dante Controller software by Audinate.
⑤ Device Model	The device model number.
⑥ Language	Set and apply language for the MXW neXt control software.
⑦ Serial Number	The unique identifier used to register the device at the Shure website, guarantee the warranty, and troubleshooting with customer support.

Wireless Microphone Settings

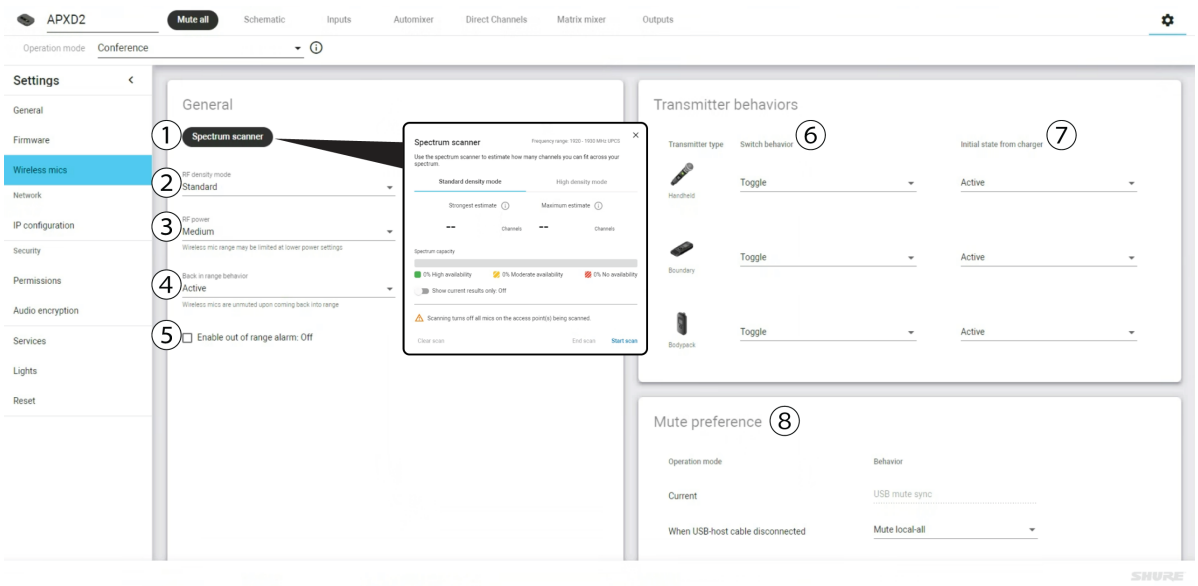

① Spectrum Scanner	Opens the spectrum scanner to estimate how many channels you can fit across your available wireless spectrum.
② RF Density Mode	Set your system to Standard (SD) or High Density (HD) modes, depending on the number of channels you need.
③ RF Power	Set your system's RF power level.
④ Back In Range Behavior	Determine what happens when a paired microphone comes back in range of your access point.
⑤ Enable Out Of Range Alarm	Check to enable an alert when a paired microphone is disconnected.
⑥ Switch Behavior	Customize the switch on each transmitter type.
⑦ Initial State from Charger	Assigns the state for the transmitter after it has been removed from the charger:
⑧ Mute Preference	Set mute preferences for your devices, when available. • **Mute local-individual (default):** Each transmitter is muted individually. *Available in Presentation, Custom, and Direct modes.* • **Mute local-all:** All transmitters mute when any transmitter is muted. *Available in Presentation, Custom, and Direct modes.* • **USB mute sync:** Ideal when connecting a single APX to videoconferencing software without the use of external DSP. Mute status can be controlled by microphones or external conferencing software and is applied universally to all linked microphones. *Available in Conferencing and Custom modes.*

	• **Mute logic-follower:** Ideal for use with Shure DSP, such as the P300 or IntelliMix Room. Control the mute status of all MXW neXt channels from the Shure DSP. Not for use with external DSP. *Available in Direct mode.* • **External mute:** Transmitter audio is always passing, and must be muted from a 3rd-party controller. Mute switches on MXW neXt devices are disabled, as mute status can only be changed by the 3rd-party controller. *Available in Presentation, Custom, and Direct modes.*

IP Configuration

The MXW neXt control software coordinates IP updates across the entire system of devices. The default setting is Auto, which enables the devices to accept IP settings from a DHCP server, or automatically fall back to Link-Local settings when no DHCP is available. To manually set the IP address of an interface, select Manual. Configure the IP properties from the Settings menu:

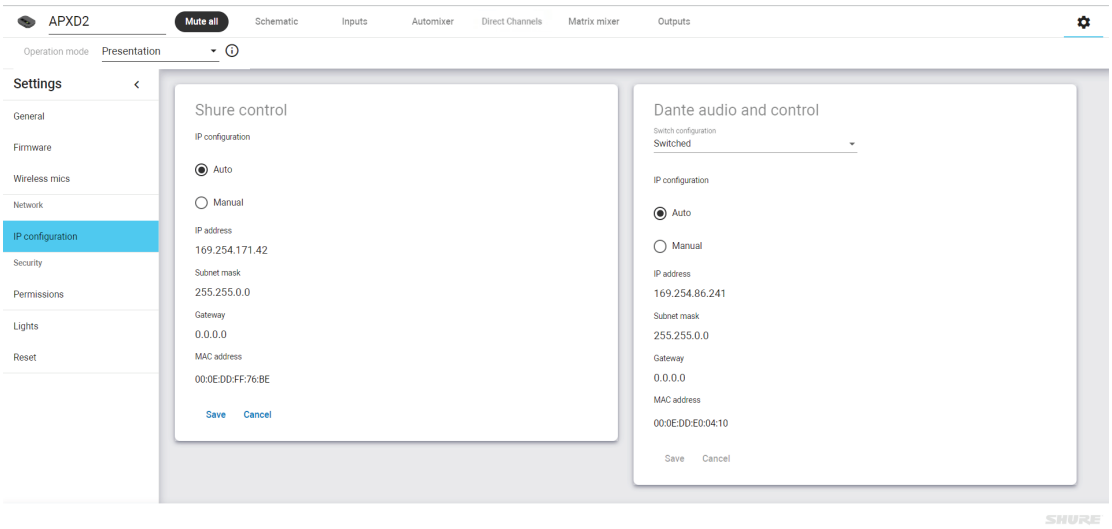

1. Go to the Settings tab for the device.
2. After adjustments have been made, click Save.

Connecting to the APXD2 Bluetooth DIS

The APXD2 supports the Bluetooth Device Information Service (DIS). When an Android phone or tablet is connected to APXD2 via Bluetooth, device information will appear in applications that support Bluetooth DIS. Bluetooth DIS does not pass audio. The APXD2 can connect via Bluetooth to one Android device at a time.

To connect to an APXD2 via Bluetooth:

1. In the MXW neXt control software, enable Bluetooth Device Information Service in `Settings` > `Services`.
2. Press and hold the Bluetooth button on the APXD2 hardware. The button flashes blue when pressed. When the button turns solid blue, the APXD2 is ready to pair with an Android phone or tablet.
3. In the Bluetooth discovery menu on your Android phone or tablet, select the APXD2 to pair with it.

Applications that support Bluetooth DIS will now display information about the APXD2.

To turn off Bluetooth on the APXD2, press and hold the Bluetooth button until the light turns off. Bluetooth turns off automatically when APXD2 is in Standby mode, is powered off, or is factory reset. As long as Bluetooth DIS remains enabled in the MXW neXt control software, long-pressing the Bluetooth button on the APXD2 will turn Bluetooth DIS functionality back on.

MXW neXt® Fusion Mode

Expand your MXW neXt system to include up to 2 Microflex Advanced (MXA) networked audio devices using MXW neXt Fusion Mode. This is ideal for hybrid settings. Fusion Mode blends presenter audio from MXW neXt microphones with audio from MXA devices so listeners on videoconferencing software hear everyone in the room, while those in the room get sound reinforcement through the MXW neXt system.

Fusion Mode optimizes the gating, mute state, and latency with your MXW neXt system and connected videoconferencing codec to highlight speakers while ducking to reduce chorus effects.

For the best audio quality, Fusion Mode only supports MXA array mics with their own built-in AEC and noise reduction enabled. Dante inputs used by Fusion Mode are excluded from the Acoustic Echo Cancellation and Noise Reduction processing in the APX IntelliMix Room DSP.

Dante Inputs 3 and 4 are optimized for automixing Shure MXA array microphones only. These channels are not recommended for other inputs, such as non-MXA wired or wireless microphones, because their levels will duck under MXW neXt transmitter levels and their audio signals will not be routed through the Acoustic Echo Canceling or Noise Reduction processing of the Automix.

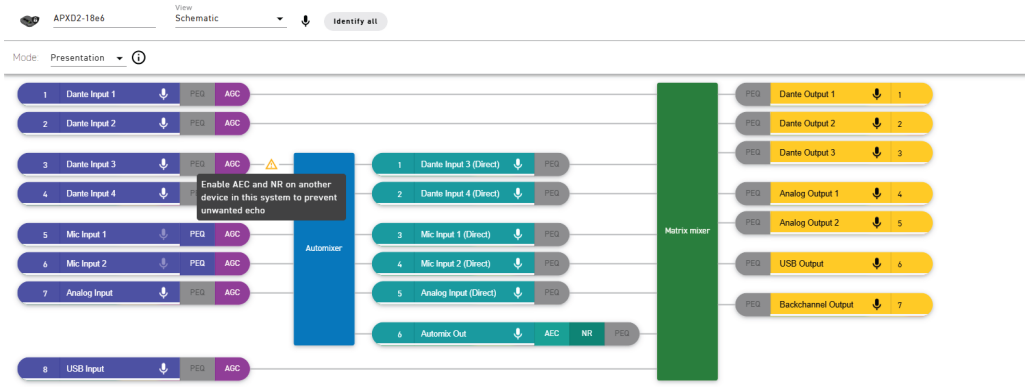

How to Set Up Fusion Rooms

Set Up the MXW neXt System

See the topics on setting up the MXW neXt 2 or MXW neXt 4/8 to set up your system.

MXW neXt Fusion Mode is optimized for use with handheld (MXW2X) or bodypack (MXW1X) transmitters. It is not recommended to use boundary (MXW6X) or gooseneck (MXW8X) transmitters with Fusion Mode.

Install MXA Devices

To ensure proper room setup with adequate coverage, always follow the installation instructions in the product user guide when placing additional devices in your room.

- MXA925 Ceiling Array Installation Instructions
- MXA920 Ceiling Array Installation Instructions
- MXA902 Ceiling Array Installation Instructions
- MXA901 Ceiling Array Installation Instructions

For other devices, refer to the array's user guide for guidance on placing array microphones.

Route in Designer

Ensure all devices are on the same network. In Designer, use Autoroute or configure the routing as follows:

- Route the output from your MXA devices to the Dante Inputs 3 and/or 4 on the APX.
- Use the Dante Out 2 from the APX as the AEC reference on the MXA devices. You can use the other Dante Outs for local sound reinforcement in your room.

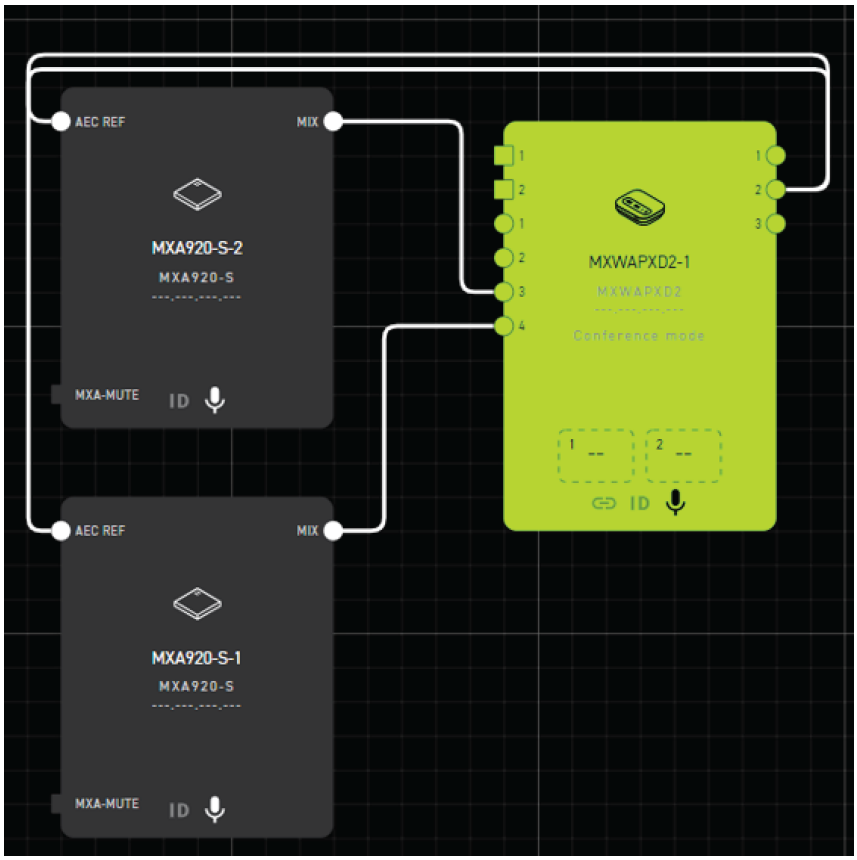

Configure the Matrix Mixer

In Designer, configure the matrix mixer to send audio to your local sound reinforcement and videoconferencing software.

The matrix mixer when the APX is in Conferencing mode looks like this:

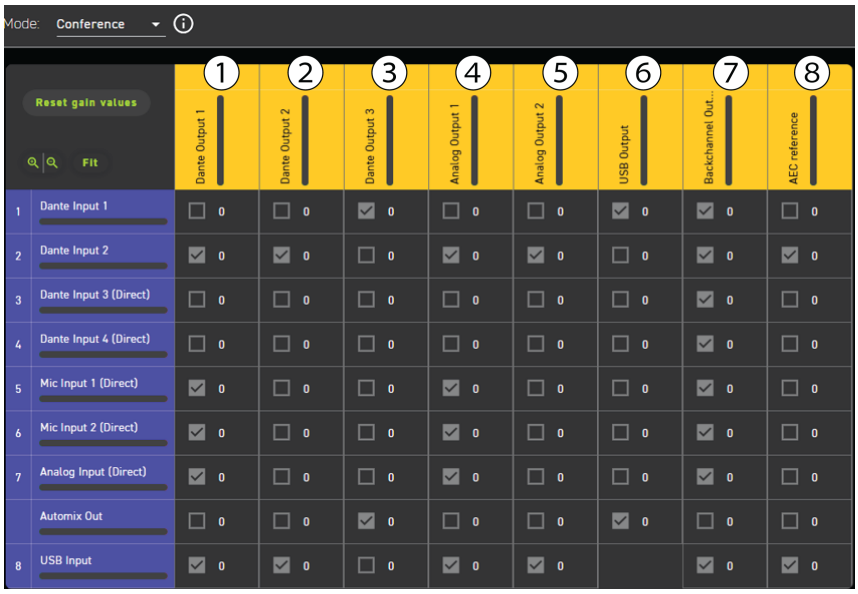

1. Dante Output 1 is for local, in-room sound reinforcement that also captures sound from users on the videoconferencing meeting.
   - The USB input is for audio from your videoconferencing software. If the APX is too far from the videoconferencing host device, use an ANIUSB in Dante Input 2.
   - Mic Inputs 1, 2, and the Analog Input are for MXW neXt transmitters and any connected analog microphone or input.
2. Dante Output 2 is for the AEC reference to your MXA devices.
   - The USB input is used for AEC to reduce echo from videoconferencing audio. If the APX is too far from the videoconferencing host device, use an ANIUSB in Dante Input 2.
3. Dante Output 3 is used to connect to videoconferencing software if your host device is too far away for a USB connection and has the same inputs as the USB output.
4. Analog Output 1 is for setups with an analog amp in the room. It includes the same inputs as Dante Output 1 (see above).
5. Analog Output 2 is for connecting far-end audio from videoconferencing software to an analog amplifer in the room. Its inputs are mix-minus (far-end audio inputs only, minus local audio).
6. USB Output is for sending audio to your videoconferencing software.
   - Dante Input 1 is for if you have any additional sources connected to your APX. Do not connect your MXA devices to Dante Input 1, as they are already included in the automix when they are routed to Dante Inputs 3 or 4.
   - Automix out sends the Fusion Mode's automix to your videoconferencing software. This will send the blended mix of MXW neXt transmitters and MXA devices to your videoconferencing software.
7. Backchannel Output includes all inputs except for the automix for any applications that require backchannel listening or monitoring. The backchannel output can be received via the audio back channel on each MXW neXt transmitter.
8. AEC reference contains inputs the APX can use for echo cancellation on MXW neXt transmitters.
   - The USB input is used for AEC to reduce echo from videoconferencing audio. If the APX is too far from the videoconferencing host device, use an ANIUSB in Dante Input 2.

For flexibility in the matrix mixer, use Custom mode and configure the matrix mixer to fit your system.

Select a Mute Logic Mode

When using Fusion Mode while the APX is in Conferencing mode, there are some differences when using USB mute sync or disabling USB mute sync. Mute local-individual mode is recommended.

When not using USB mute sync:

- In Mute local-individual mode:
  - MXW neXt microphones can be individually muted. Pressing the mute button on a microphone will only mute that microphone and won't mute any other microphones or the videoconferencing software
  - The videoconferencing software can be muted from the device running the videoconferencing software.
- In Mute local-all mode:
  - If a microphone is marked as Mute logic leader, it will mute all MXW neXt microphones and MXAs when the mute button is pressed.
- In Mute logic-follower mode:
  - Muting from any connected DSP (like a P300) will mute all microphones.
  - Use of external DSP is less necessary in Fusion applications because Fusion applies its own DSP.
- In Mute external mode:
  - Mute status can be programmed freely and customized to your system.

When using USB mute sync:

- Mute state on the MXW neXt microphone is synced with your videoconferencing software. Pressing the mute button on the MXW neXt microphone will mute or unmute the videoconferencing microphone.
- MXA mute status is synced with the videoconferencing software's mute status.
- MXW neXt audio will continue to pass through local sound reinforcement even when the videoconferencing software is muted.
- When the videoconferencing host device's USB is disconnected, MXW neXt transmitters will continue to pass audio through local sound reinforcement. The room will function like a non-Fusion room, as there is no connection to videoconferencing software if the USB is disconnected.

Set Up Audio in Videoconferencing Software

In your videoconferencing software, select the APX as your microphone and speaker in the meeting.

Fusion is now configured in your room and will automatically mix MXW neXt sound with sound from your MXA devices. DSP will be synced and sound from MXA devices will automatically duck when an MXW neXt microphone is in use, ensuring clear sound in the room and through videoconferencing software.

MXW neXt Fusion Mode Troubleshooting

Issue/Question	Solution/Answer
How do I fix sound from my MXA devices dominating the mix?	Increase the gain on your MXW neXt microphone by 4-5 dB, and decrease the gain on the MXW neXt microphone's channel in the Automix by the same amount. Increasing input gain gives the MXW neXt microphone a few dB advantage for gating in the automixer, and lowering gain again in the automixer re-balances the relative levels as needed. Decrease the gain on your MXA input by 4-5 dB, and increase the gain on the MXA channel in the Automix by the same amount. Decreasing input gain makes the MXA trigger gating less in the automixer, and raising in the automixer re-balances relative levels as needed. If Direct Outs are used, make the opposite gain change in the Direct Outputs as well, since input gain changes pass to Direct Outputs.

Issue/Question	Solution/Answer
	Any input gain adjustment may impact the input's Automatic Gain Control (AGC) directly in line with that gain.
Why does sound from MXA devices sound thin compared to my MXW neXt microphones?	MXW neXt microphones have more low-end frequency response. Add a high-pass filter to the PEQ on the MXW neXt microphone to reduce the low-end response. Boost the low end on the PEQ of the MXA arrays, though this may boost the sound of low room noise like HVAC.
How do I fix a slight difference in frequency response between MXW neXt microphones and MXA devices?	Configure the EQ on your devices in Designer to reduce or eliminate slight differences in sound.
How do I configure MXW neXt Fusion Mode in Dante Controller?	Route mix outputs from arrays into APX Dante In 3 and 4. Route appropriate AEC reference signal from APX, into the arrays. Ensure that AEC is enabled on the arrays (via array control software). Shure devices adjust for latency variation between themselves when connected.

AURACAST™ Broadcast Audio

Auracast™ broadcast audio enables the APX to serve as a transmitter over Bluetooth® wireless technology for an unlimited number of nearby Bluetooth receivers to tune in to. Auracast is commonly used for sound reinforcement over personal listening devices, such as Auracast-enabled hearing aids or headphones. License this feature on an APX via ShureCloud.

Auracast licenses for MXW neXt are available as perpetual, annual, or monthly purchases. Perpetual licenses are one-time purchases, can only be applied to one device, and cannot be transferred between devices. If a perpetually licensed APX changes owners or organizations, the license will transfer with the APX. Annual and monthly licenses can be transferred between APX devices.

Add APX Devices to ShureCloud

Before you can license Auracast, add your APX to ShureCloud:

1. Log in to ShureCloud at cloud.shure.com, or create a new account and a new organization to register your device to. See more about getting started with ShureCloud in the ShureCloud user guide.
2. Enable Cloud connectivity in the MXW neXt web application or Designer. In the web app or Designer, navigate to `Settings` > `Services` and ensure Cloud connectivity is On.
3. In ShureCloud, follow these steps to add your MXW neXt device to your ShureCloud device inventory.

Purchase and Apply Auracast Licenses

Add Auracast licenses to your ShureCloud account via claim code in the Licenses & Warranties tab. There are three types of Auracast licenses: perpetual, annual, and monthly.

To license your APX with Auracast:

1. Claim your licenses in ShureCloud.
2. Apply your licenses to APX devices in ShureCloud.

Claim Auracast Licenses in ShureCloud

1. Purchase licenses through a Shure Partner or from the product page for your device. Keep the claim code you receive upon purchase.
2. Select Add licenses via claim code in the Licenses & Warranties tab of ShureCloud.
3. Ensure that the correct organization is selected before inputting your claim code and clicking Next. Follow the steps on the screen in ShureCloud. ShureCloud will confirm the number of licenses in the final screen of the claim window.

Apply Auracast Licenses to APX Devices

1. In ShureCloud, go to Licenses & Warranties.
2. Select Shure Auracast broadcast audio from the Licenses & Warranties list. The table will show all APX devices in your organization, whether they're Auracast licensed or not.
3. Check the box(es) next to the APX device(s) you want to license.

   Important: Perpetual licenses cannot be transferred from one APX to another APX. Monthly and annual licenses can be transferred between APX devices.

4. Click Apply (X) licenses. In the pop-up, select the type of license(s) you want to apply.
5. On APXD2, the Bluetooth button will flash while the license applies and will be solid blue when Auracast is active. On APXD4/8, the System LED will flash while the license applies.

Using the APX as an Auracast Transmitter

Once your APX has an Auracast license associated to it, you can configure the APX as an Auracast transmitter.

1. In the MXW neXt web app or Designer, navigate to Bluetooth in the APX's settings window. If your license was successfully applied, the Auracast license status will be Activated.
2. Toggle the switch to Auracast: On.
3. Customize the name and power level of the broadcast, and set a broadcast code if needed. Broadcast codes password protect the broadcast. Users trying to connect to the broadcast will need to enter the code to connect. Hit Apply to save your settings.

   Note: *Some settings can also be configured in the* Devices *tab in ShureCloud. For full settings and control, use Designer or the MXW neXt web app.*

4. Configure the Auracast output in the web app or Designer.

Adjust DSP Settings

Acoustic Echo Cancellation

In audio conferencing, a far-end talker may hear their voice echo as a result of a near-end microphone capturing audio from loudspeakers. Acoustic echo cancellation (AEC) is a DSP algorithm which identifies the far-end signal and stops it from being captured by the microphone to deliver clear, uninterrupted speech. During a conference call, the AEC works constantly to optimize processing while far-end audio is present.

When possible, optimize the acoustic environment using the following tips:

- Reduce loudspeaker volume
- Position loudspeakers farther from microphones
- Avoid pointing loudspeakers directly at microphone coverage areas

Note: *If the Shure system is providing AEC, it is not recommended to enable AEC anywhere else in the audio chain.*

Select a Reference Signal for AEC

AEC is applied at the output channel. To set or change the reference signal, set the operation mode to Custom and route a far-end signal to the AEC Reference output from the Matrix Mixer. For best results, use the signal that also feeds your local reinforcement system.

Note: Always send an AEC reference signal to microphones with AEC processing, even if you are using a separate DSP for AEC.

AEC Settings

Reference Meter	Use the reference meter to visually verify the reference signal is present. The reference signal should not be clipping.
ERLE	Echo return loss enhancement (ERLE) displays the dB level of signal reduction (the amount of echo being removed). If the reference source is connected properly, the ERLE meter activity generally corresponds to the reference meter.
Reference	Indicates which channel is serving as the far end reference signal.
Non-Linear Processing	The primary component of the acoustic echo canceller is an adaptive filter. Non-linear processing supplements the adaptive filter to remove any residual echo caused by acoustic irregularities or changes in the environment. Use the lowest possible setting that is effective in your room. **Low:** Use in rooms with controlled acoustics and minimal echoes. This setting provides the most natural sound for full duplex. **Medium:** Use in typical rooms as a starting point. If you hear echo artifacts, try using the high setting. **High:** Use to provide the strongest echo reduction in rooms with bad acoustics, or in situations where the echo path frequently changes.

Automatic Gain Control (AGC)

Automatic gain control adjusts channel levels to ensure consistent volume for all talkers, in all scenarios. For quieter voices, it increases gain; for louder voices, it attenuates the signal.

Automatic gain control is post-fader, and adjusts the channel level after the input level has been adjusted. Enable it on channels where the distance between the talker and the microphone may vary, or in rooms where many different people will use the conferencing system.

Target Level (dBFS)

Represents the level that you want the gain to reach. This level is different from adjusting the input fader according to peak levels to avoid clipping.

Maximum Boost (dB)

Sets the maximum amount of gain that can be applied

Maximum Cut (dB)

Sets the maximum attenuation that can be applied

Tip: Use the boost/cut meter to monitor the amount of gain added or subtracted from the signal. If this meter is always reaching the maximum boost or cut level, adjust the input fader so the signal is closer to the target level.

Noise Reduction

Noise reduction keeps the focus on your voice by reducing the level of background noise. Noise reduction is best for constant noise sources such as:

- Loud HVAC systems
- Network switch or server fans
- Display projectors

Noise reduction is a dynamic processor which calculates the noise floor in a room and removes noise throughout the entire spectrum with maximum transparency.

MXW neXt System Connection Diagrams

The following system diagrams illustrate potential use-cases for connecting your MXW neXt system. For more help on system configuration, please contact your local service representative.

APXD2 Connection Overview

The APXD2 can be operated with or without a computer, and features analog, USB and Dante connections as well as wireless communication with paired MXW neXt microphones. Systems can be configured for sound reinforcement, videoconferencing, or both.

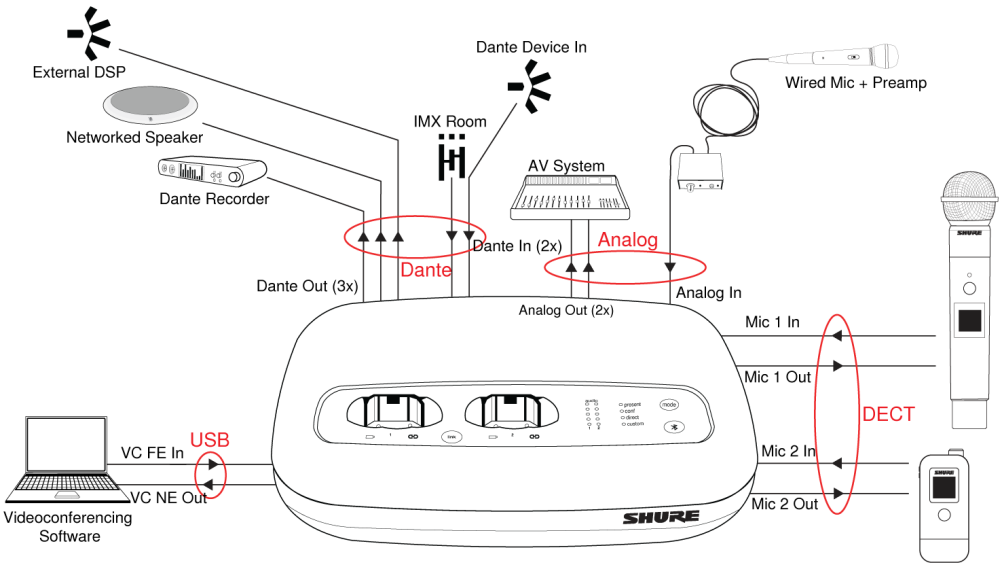

Sound Reinforcement

Connect additional audio devices to ensure presenters can be heard clearly anywhere in the room.

Analog Out

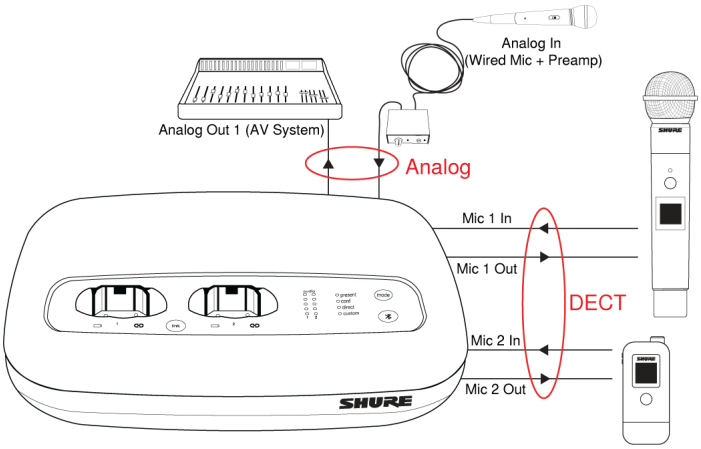

Operation Mode: Presentation

Dante Out

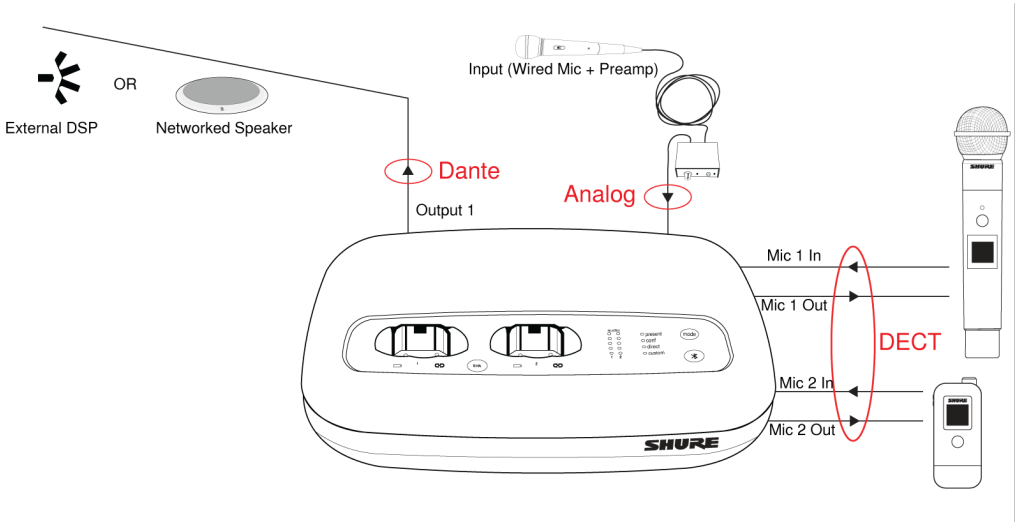

Operation Mode: Presentation

Video Conferencing

Use APXD2 to seamlessly provide high-quality audio to your chosen conferencing software.

Analog Out

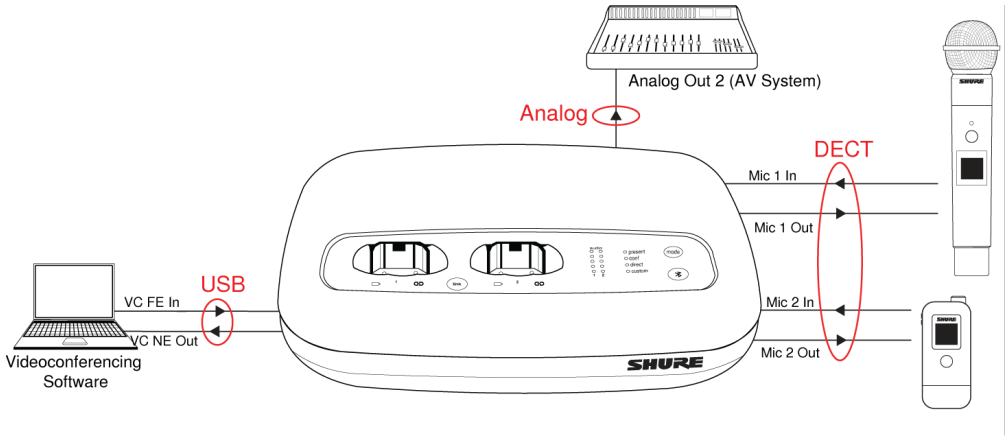

Operation Mode: Conference

Room TV

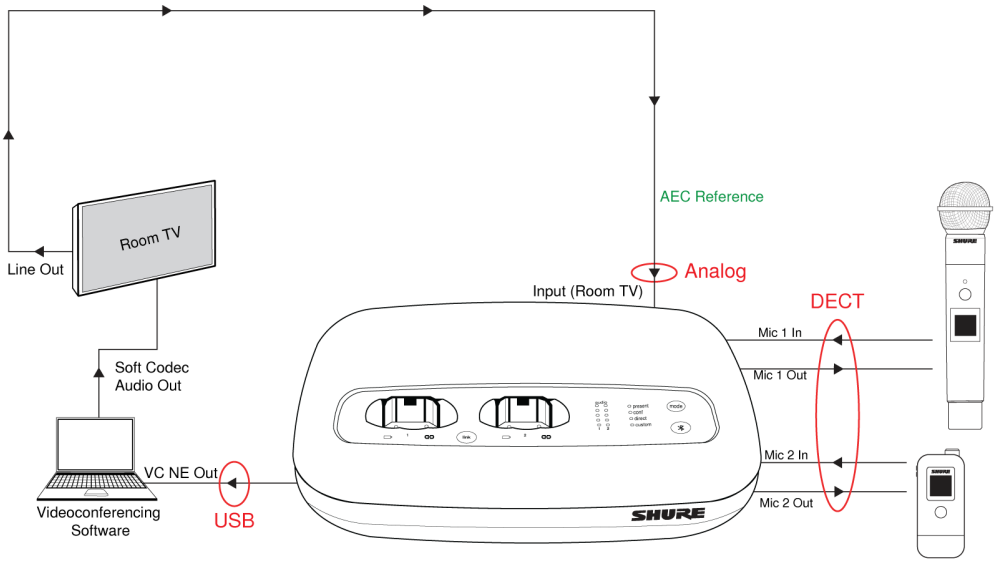

Operation Mode: Conference

APX4/8 Connection Diagrams

MXW neXt systems can be operated with or without a computer, and feature analog, USB and Dante connections as well as wireless communication with paired MXW neXt microphones. Built-in DSP enables direct connection to video conferencing systems, with optional simultaneous sound reinforcement in hybrid use cases.

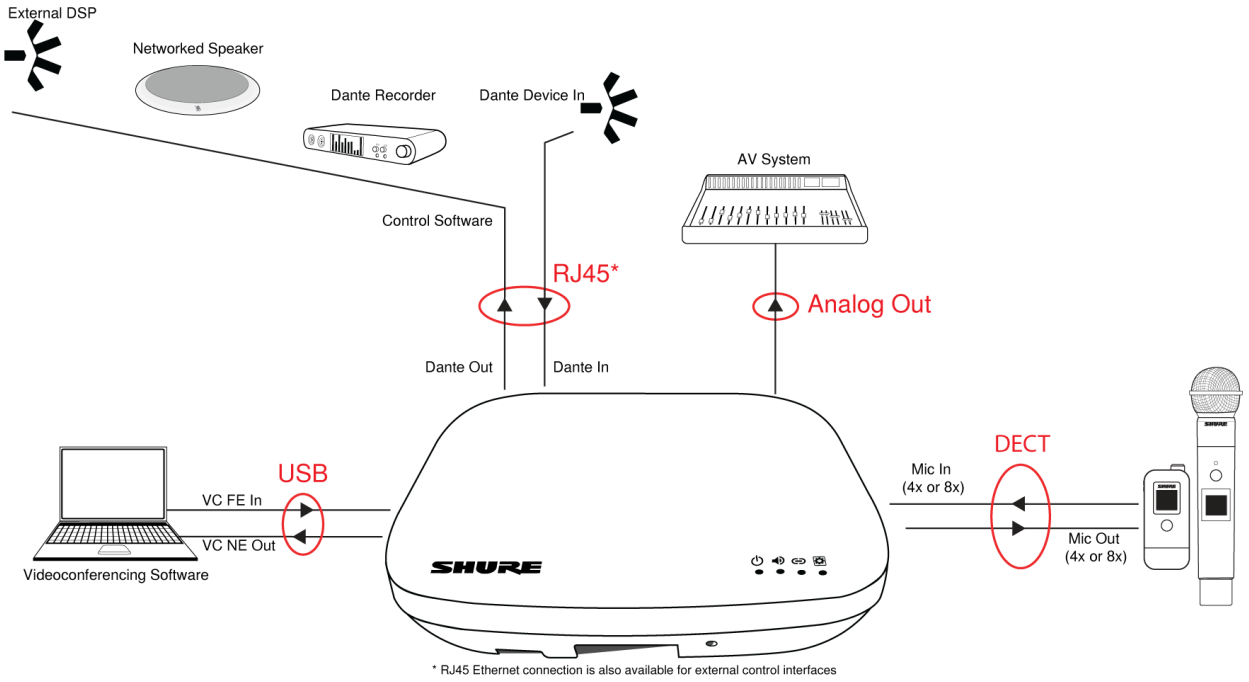

Example: Sound Reinforcement

Ensure remote and in-person presenters can be heard clearly anywhere in the room.

Note: Additional sound reinforcement configurations are possible based on available hardware and system capabilities.

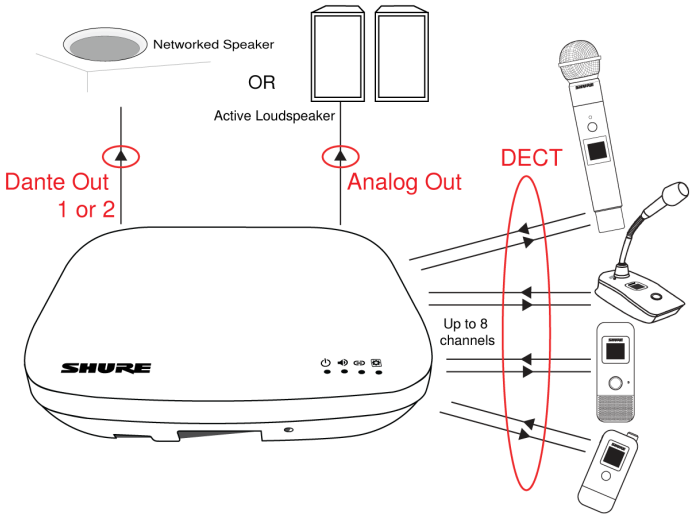

Operation Mode: Presentation

Example: Video Conferencing

Enhance your conference rooms with high-quality audio for all participants.

Note: Additional conferencing configurations are possible based on available hardware and system capabilities.

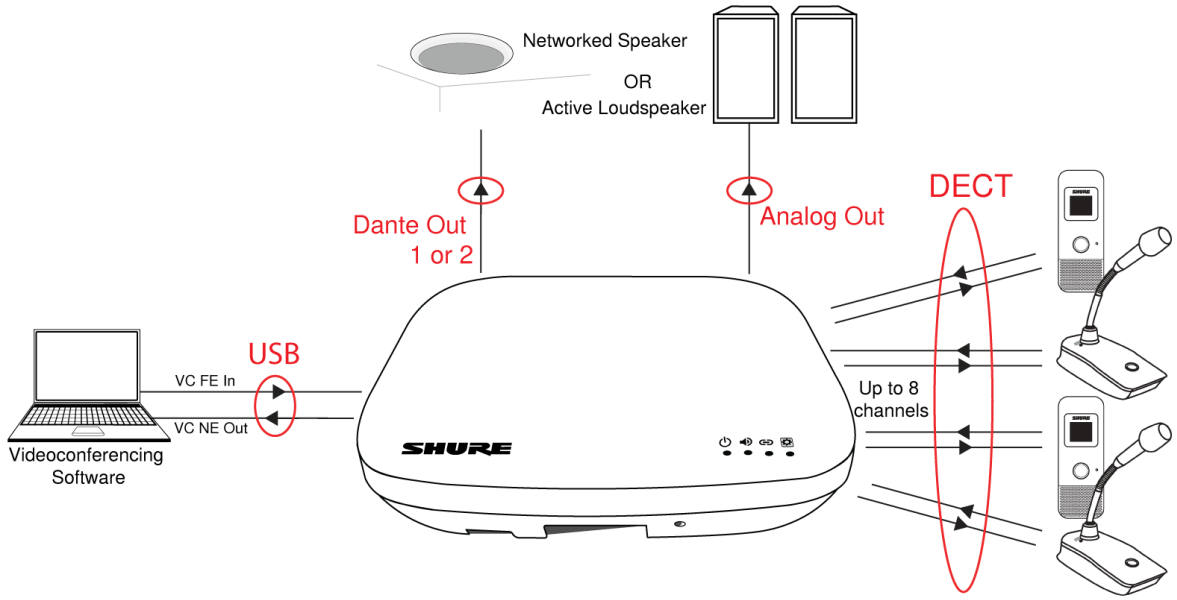

Operation Mode: Conference

Configuring Networks with MXW neXt

Networking Best Practices

Use the following best practices when setting up a network to ensure reliable communication:

- Always use a "star" network topology by connecting each component directly to the switch or router.
- Connect networked MXW neXt gear to the same network and set to the same subnet. This ensures best system performance and maximum microphone count.
- Use only 1 DHCP server per network. Disable DHCP addressing on additional servers.
- Power on the switch and DHCP server prior to MXW neXt equipment.
- To expand the network, use multiple Ethernet switches in a star topology.
- Connect each device directly to the port of an Ethernet switch. Avoid "daisy-chaining" Ethernet port connections between devices for larger networks.
- Do not loop network connections.
- All devices must be at the same firmware revision level.

Digital Audio Networking

Dante digital audio is carried over standard Ethernet and operates using standard internet protocols. Dante provides low latency, tight clock synchronization, and high Quality-of-Service (QoS) to provide reliable audio transport to a variety of Dante devices. Dante audio can coexist safely on the same network as IT and control data, or can be configured to use a dedicated network.

Network Audio and Shure Control Data

MXW neXt devices transport two types of data over the network: Shure Control and Network Audio.

Shure Control

The Shure Control carries data for the control software operation, firmware updates and 3rd party control systems (AMX, Crestron). This data is transported to all MXW neXt components connected to the network.

Network Audio

This network carries both the Dante digital audio and the control data for Dante Controller. This data is transmitted between the APT, the output device and the computer. The network audio requires a wired, gigabit Ethernet connection to operate.

Go to`Settings` > `IP Configuration` to view and edit the IP settings for MXW neXt devices.

Manually Assigning Static IP Address

To manually assign IP addresses to the MXW neXt system, follow these steps:

1. Open the IP Configuration menu in the Settings tab.
2. Select the Manual radio button.
3. Enter the IP settings and click Save. The control software may close if settings have been updated for the access point.
4. Change the computer's IP address to match the subnet of the MXW neXt equipment.
5. Reopen the MXW neXt control interface.

Dante Network Audio

Connect your Dante audio network to the MXW neXt system.

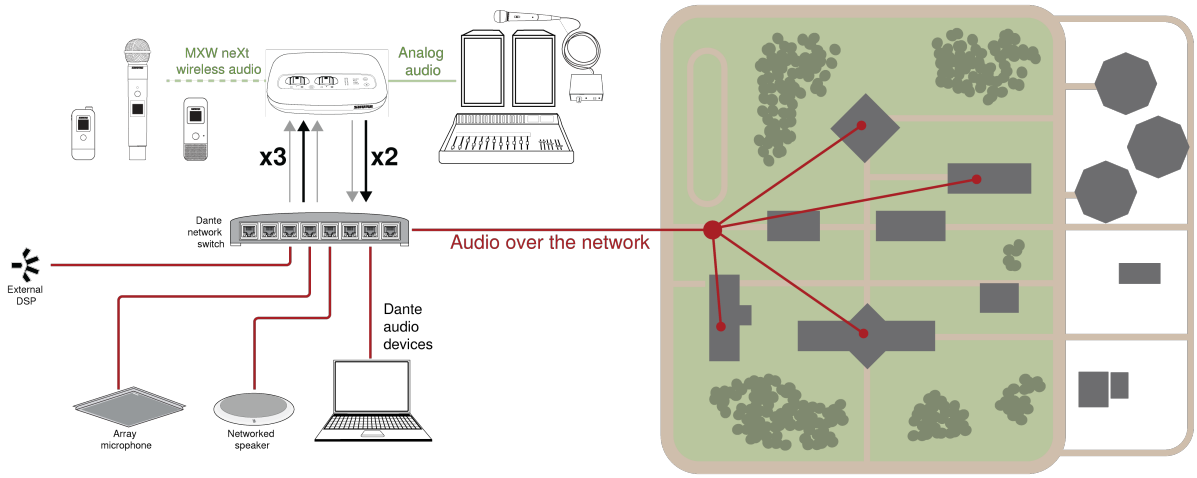

Connect a network of devices

2 input channels, useful for:

- Dante-enabled microphones
- Output from an automatic mixer or room system
- Videoconferencing signal of far-end audio

3 output channels, useful for:

- Recording system for archiving
- Live-streaming events
- Videoconferencing feed of near-end audio

Routing Dante Channels

Use Shure's Designer software, or Dante Controller software by Audinate®, to route Dante channels in and out of the MXW neXt system.

Overview of Dante Network Modes

The Dante network interface has two ports (Primary and Secondary) to provide flexible routing and configuration options for network signals.

Three selectable Dante network modes are available to control signal routing from the receiver ports to the Dante network.

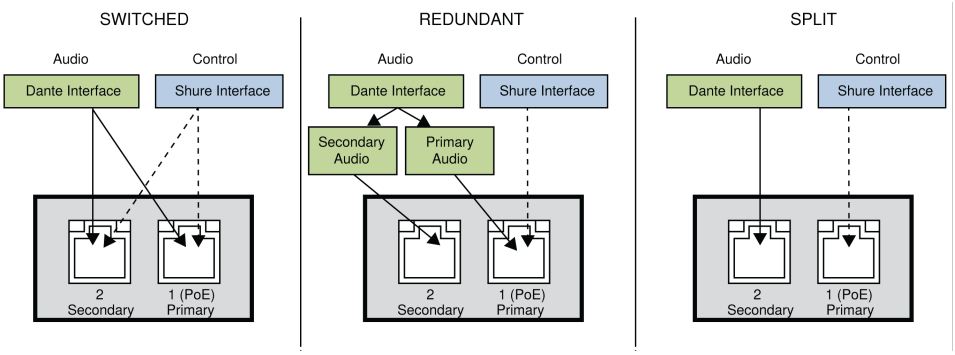

Network Mode	Port Function and Signals		Application
	Secondary	Primary	
SWITCHED	Shure Control Dante Audio and Control	Shure Control Dante Audio and Control	For single network Installations of star or daisy-chained networks.
REDUNDANT AUDIO	Dante Redundant Audio	Shure Control Dante Audio and Control	Primary and Secondary ports are configured are 2 separate networks. The Secondary port carries a backup copy of the Primary digital audio signal.
SPLIT	Dante Audio and Control	Shure Control	Primary and Secondary ports are configured are 2 separate networks to provide isolation between control signals and audio signals.

Setting the Dante Networking Mode

Select a Dante mode from the web application under `Settings` > `IP Configuration` to configure network signal routing on the Primary and Secondary ports. Set all receivers on the network to the same mode.

Note: Remove network connections from the receiver before changing the mode.

Network Connection and Configuration

Switched mode is typically used for single network installations of star or daisy-chained networks. Switched mode is recommended for installations that don't require Dante audio.

Network characteristics:

- Dante Audio and Shure Control are present on both the Primary and Secondary ports
- The Dante IP address and the Shure Control IP address must be on the same subnet. The computer running control software must also be on this subnet.

Switch Recommendations for Dante Networking

In addition to the basic networking requirements, Dante audio networks should use a Gigabit network switch or router with the following features:

- Gigabit ports
- Quality of Service (QoS) with 4 queues
- Diffserv (DSCP) QoS, with strict priority
- Recommended: A managed switch to provide detailed information about the operation of each network link (port speed, error counters, bandwidth used)

QoS (Quality of Service) Settings

QoS settings assign priorities to specific data packets on the network, ensuring reliable audio delivery on larger networks with heavy traffic. This feature is available on most managed network switches. Although not required, assigning QoS settings is recommended.

Note: Coordinate changes with the network administrator to avoid disrupting service.

To assign QoS values, open the switch interface and use the following table to assign Dante®-associated queue values.

- Assign the highest possible value (shown as 4 in this example) for time-critical PTP events
- Use descending priority values for each remaining packet.

Dante QoS Priority Values

Priority	Usage	DSCP Label	Hex	Decimal	Binary
High (4)	Time-critical PTP events	CS7	0x38	56	111000
Medium (3)	Audio, PTP	EF	0x2E	46	101110
Low (2)	(reserved)	CS1	0x08	8	001000
None (1)	Other traffic	BestEffort	0x00	0	000000

Note: Switch management may vary by manufacturer and switch type. Consult the manufacturer's product guide for specific configuration details.

For more information on Dante requirements and networking, visit www.audinate.com.

Networking Terminology

PTP (Precision Time Protocol): Used to synchronize clocks on the network
DSCP (Differentiated Services Code Point): Standardized identification method for data used in layer 3 QoS prioritization

Network Connection and Configuration Examples

Note: Use shielded Cat5e cable for network connections to ensure reliable performance.

Switched Mode

Switched mode is typically used for single network installations of star or daisy-chained networks. Switched mode is recommended for installations that don't require Dante audio.

Network characteristics:

- Dante Audio and Shure Control are present on both the Primary and Secondary ports
- The Dante IP address and the Shure Control IP address must be on the same subnet. The computer running Wireless Workbench must also be on this subnet.

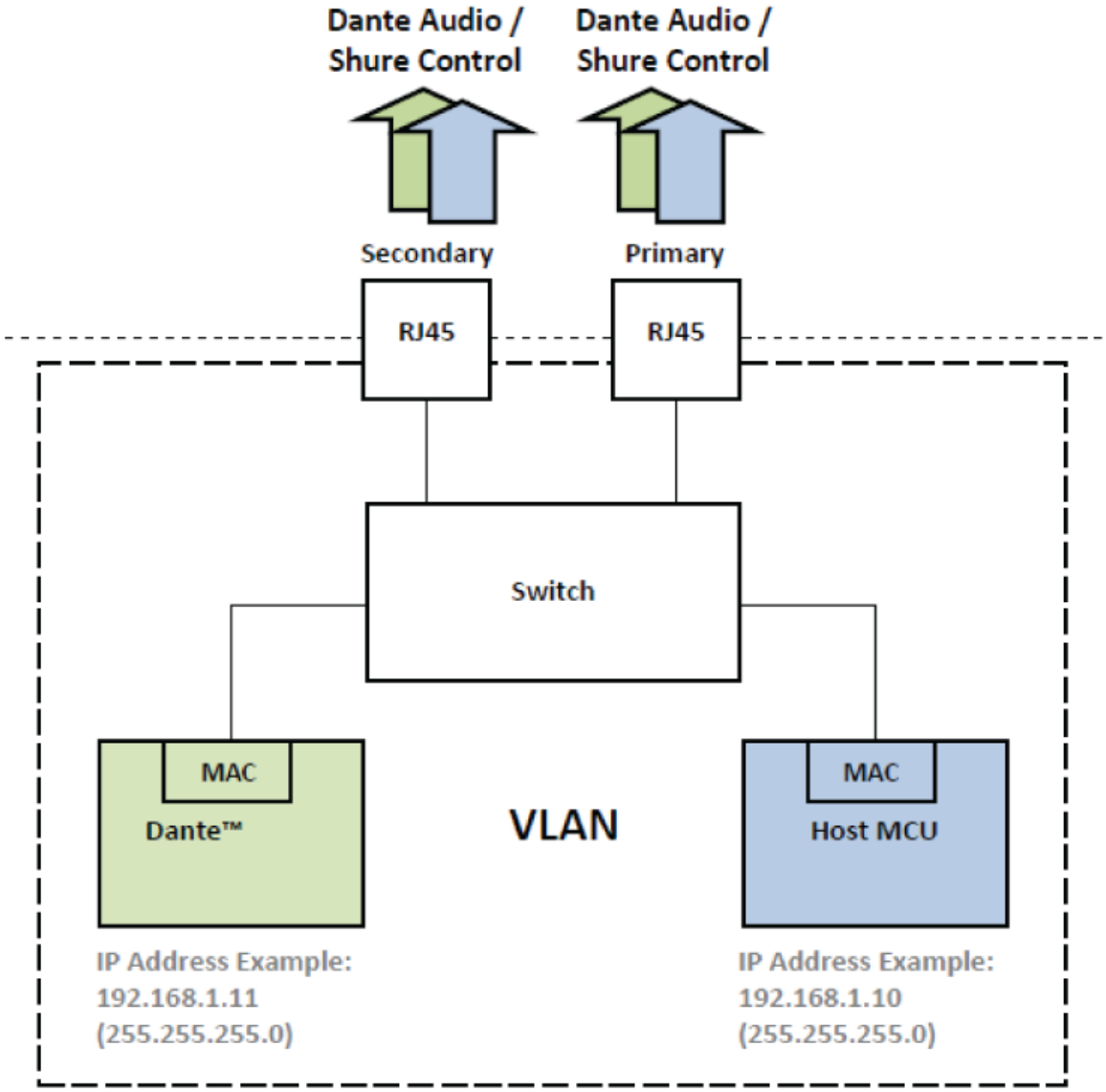

Network Example (Dante Audio + control software)

① Computer

Connect the computer running the control software and Dante controller to the Primary port.

② DHCP Server

Can be configured with or without a DHCP server. Do not route audio through the server.

③ Gigabit Ethernet Switch

- Do not connect both network ports to the same Ethernet switch
- Use a star network topology to minimize audio latency

④ Receiver Connection

Connect receivers to the Primary port

⑤ Dante Receiver

Connect Dante receivers (mixers, recorders, amplifiers) to the Primary port.

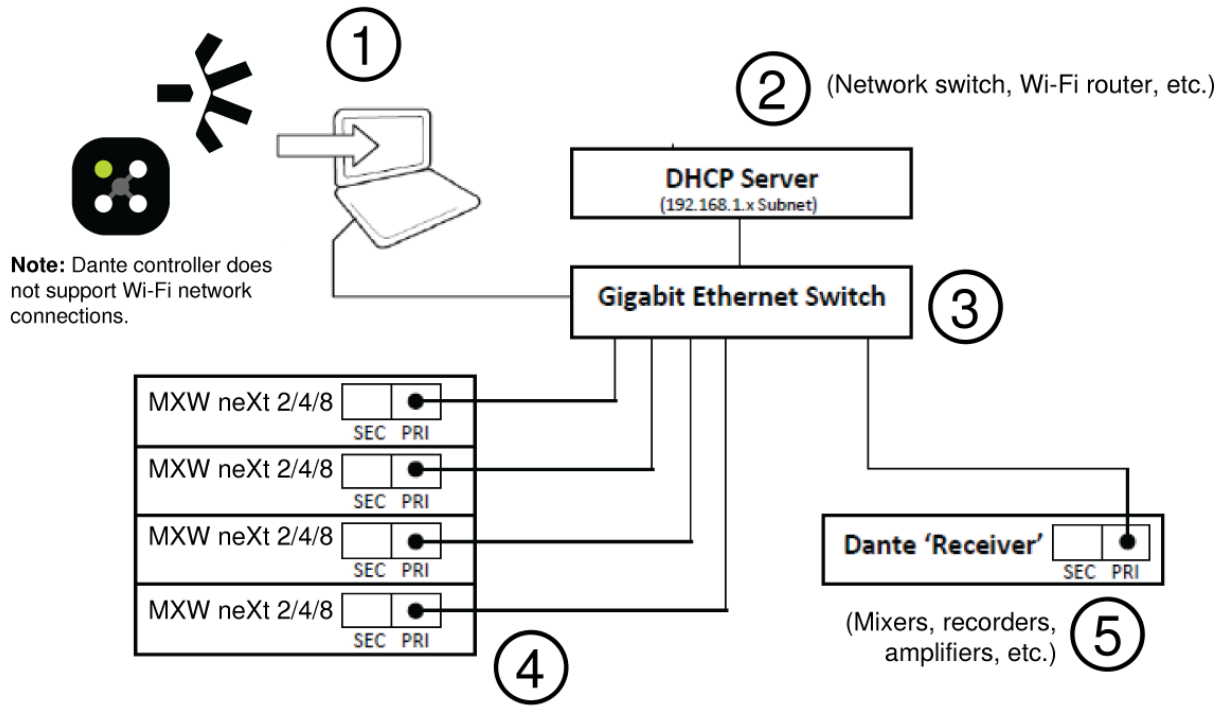

Redundant Audio Mode

Use redundant mode to carry a backup copy of the Dante audio on the Secondary network in case the audio on the primary network is interrupted.

Network characteristics:

- Dante Primary Audio and Shure Control are present on the Primary port
- Backup Dante audio is present on the Secondary port
- The Primary Dante IP address and the Shure Control IP address must be on the same subnet. The computer running Wireless Workbench must also be on this subnet.
- The Secondary Dante IP Address must be set to a different subnet

Note: Devices connected to the Redundant network must be compatible with Redundant audio.

Network Example

① Computer

Connect the computer running the control software and Dante controller to the Primary port.

② DHCP Server

Can be configured with or without a DHCP server. Do not route audio through the server.

③ Gigabit Ethernet Switches

- Use dedicated switches for the Primary and Secondary networks
- Do not connect both network ports to the same Ethernet switch
- Use a star network topology to minimize audio latency

④ Receiver Connection

Connect Primary and Secondary ports to dedicated switches.

Note: *The Secondary port only supports manual IP or automatic Link-Local configuration. The Link-Local Dante Secondary address subnet is preset to 172.31.x.x (255.255.0.0)*

⑤ Dante Receiver

Connect Dante receivers (mixers, recorders, amplifiers) to the Primary or Secondary ports.

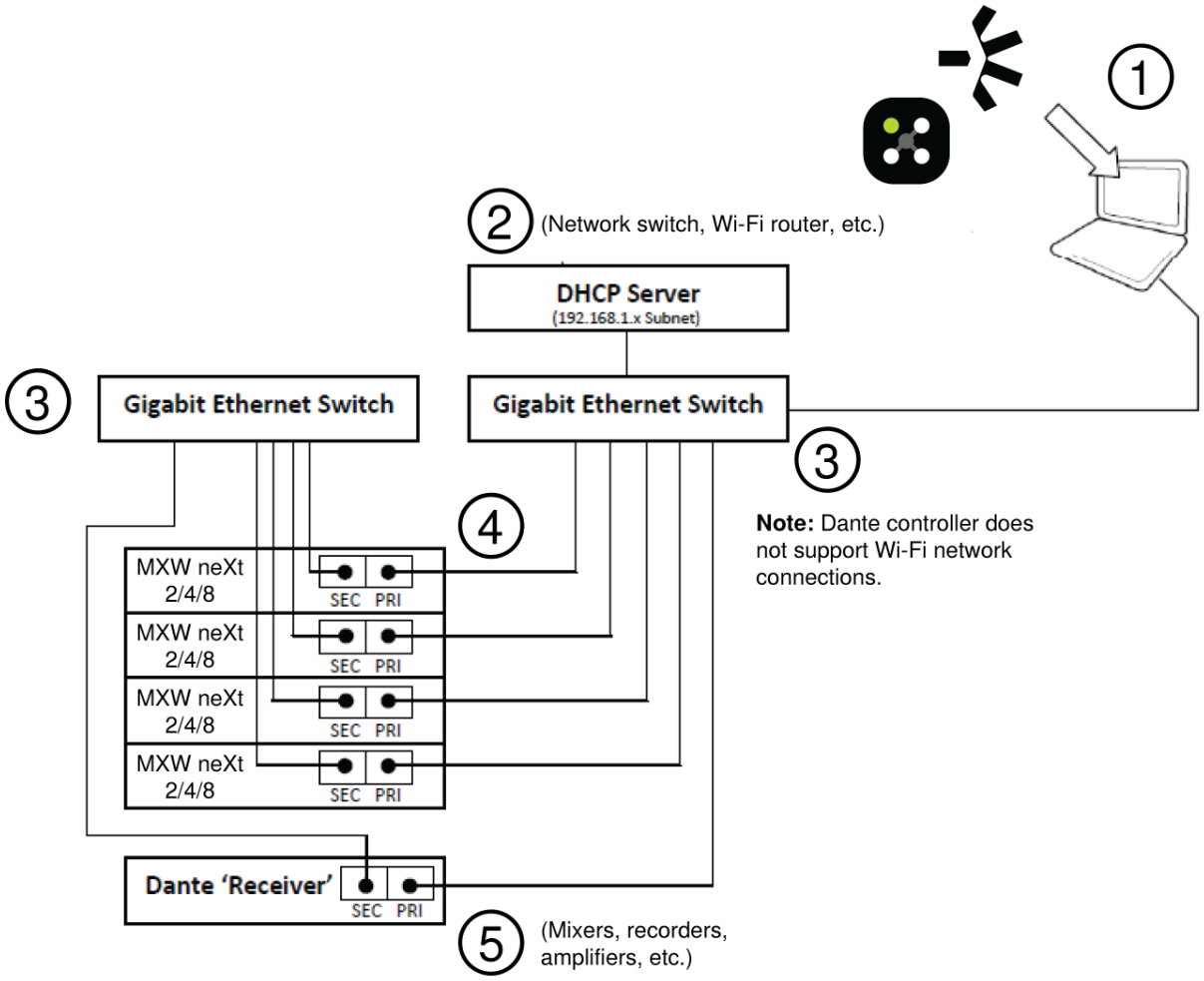

Split Mode

Use Split Mode to isolate control signals from audio signals by placing them on two separate networks.

Network Characteristics:

- Shure Control is present on the Primary port
- Dante Audio is present on the Secondary port
- The IP addresses for Dante and Shure Control must be on different subnets

Network Example

① Computer (Dante Controller)

Connect the computer running the Dante controller to the Secondary port.

② DHCP Server (Secondary Network)

Can be configured with or without a DHCP server. Do not route audio through the server.

③ Gigabit Ethernet Switch (Secondary Network)

- Use dedicated switches for the Primary and Secondary networks
- Do not connect both network ports to the same Ethernet switch
- Use a star network topology to minimize audio latency

④ Receiver Connections (Dante Audio)

Connect the Secondary ports to the Secondary network switch.

⑤ Computer (Shure Control)

Connect the computer running the Shure Control to the Primary port.

⑥ DHCP Server (Primary Network)

Can be configured with or without a DHCP server. Do not route audio through the server.

⑦ Gigabit Ethernet Switch (Primary Network)

- Use dedicated switches for the Primary and Secondary networks
- Do not connect both network ports to the same Ethernet switch
- Use a star network topology to minimize audio latency

⑧ Receiver Connections (Shure Control)

Connect the Primary ports to the Primary network switch.

⑨ Dante Receiver

Connect Dante receivers (mixers, recorders, amplifiers) to the Primary port.

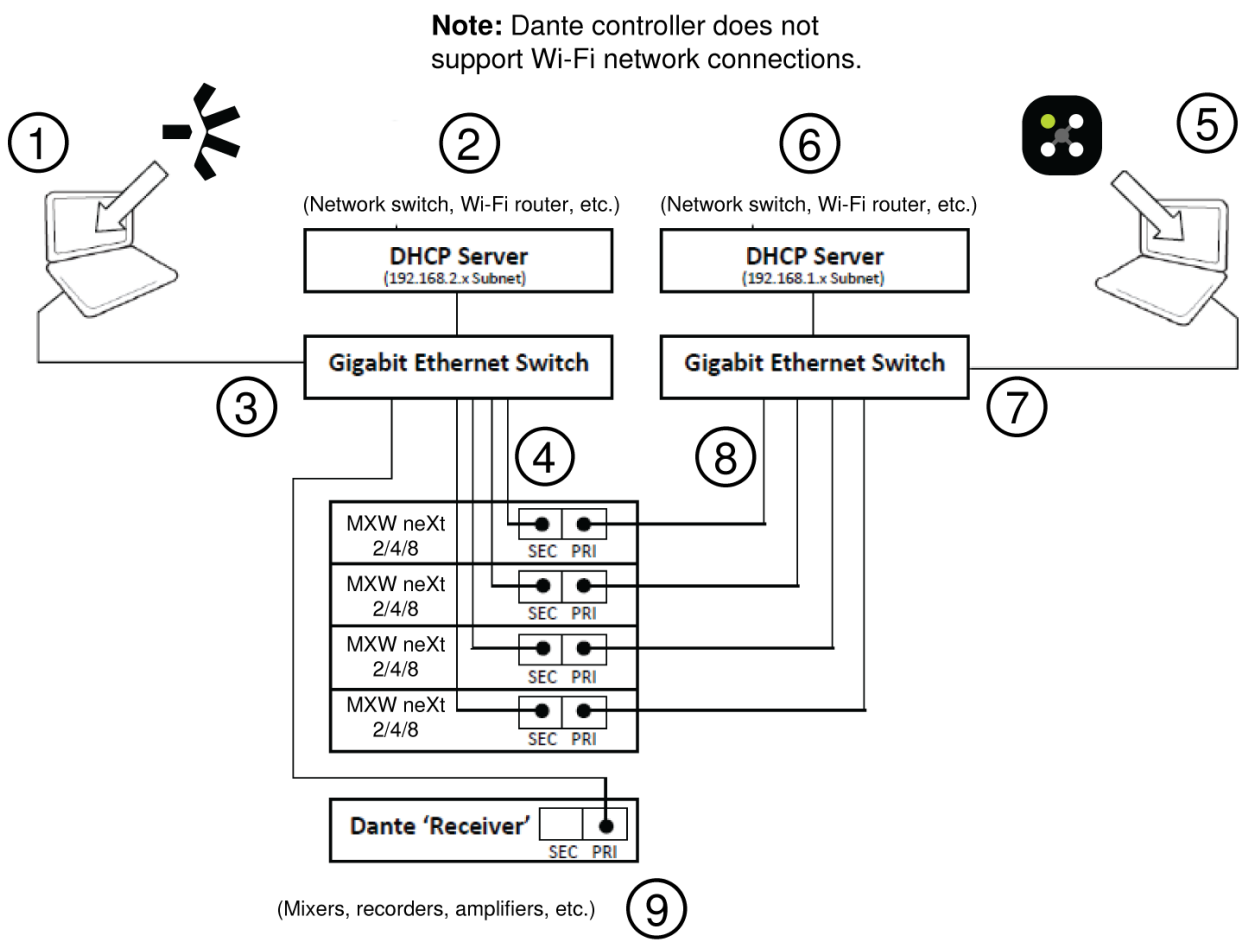

Advanced Setup

More information on advanced networking is available at www.shure.com.

Device IP Configuration

This Shure device uses 2 IP addresses in Switched and Split modes: one for Shure control, and one for Dante audio and control. Redundant mode uses a third IP address as a Dante backup. For most installations, the Shure control and Dante audio IP addresses should be in the same subnet range.

- **Shure control**
  - Carries data for Shure control software, firmware updates, and third-party control systems (such as AMX or Crestron)
- **Dante audio and control**
  - Carries Dante digital audio and control data for Dante Controller
  - Requires a wired, gigabit Ethernet connection to operate

Note: Refer to our FAQ if you're using Shure profiles on NETGEAR M4250-series switches.

Ports, Protocols, and Firewall Rules

For information about IP ports and protocols or firewall rules, go to:

- IP Ports and Protocols for Shure Devices
- Firewall Rules for Shure Software Applications

Connecting to an External Control System

The MXW neXt system connects to an AMX or Crestron control system via the Ethernet. Use only one controller per system to avoid messaging conflicts.

For a comprehensive list of MXW neXt command strings, visit shure.com/en-US/docs/commandstrings/MXWneXt.

- Connection: Ethernet (TCP/IP; MXW is the client)
- Port: 2202

Additional Resources

For additional Troubleshooting assistance or further information on complex installations, visit https://www.shure.com/support or contact your local Shure service center.

For digital audio networking help, advanced networking guidelines and Dante software troubleshooting, visit Audinate's website at www.audinate.com.

Using the 802.1X Security Protocol

MXW neXt supports the 802.1X security protocol. Once 802.1X is set up, its behavior varies depending on the device and the network mode. Learn to set up the 802.1X security protocol and select the right network mode for your setup in this section.

Set Up the 802.1X Protocol for a Device

Select Shure devices support the IEEE 802.1X port access protocol for network authentication.

Important: To use the 802.1X security protocol with Shure devices, set the network switch to multiple host authentication. You must also make accommodations to allow the audio NIC to connect to the network. The audio NIC doesn't support the 802.1X protocol.

To set up 802.1X, you will need:

- Details about your authentication server's EAP method
- Any required credentials or certificates for that method, for example:
  - MD5 and PWD
    1. User ID and passphrase
  - TLS and PEAP
    1. User ID and passphrase
    2. Certificate (with certificate types) in the .PEM format
- Any passwords to access the devices if they are password locked

Setting up 802.1X is a two-part process.

Step 1: Configure Settings on Test Network

1. Connect the device to a test network that *does not* have 802.1X enabled, and discover it using Designer.
2. Set a device password if desired.
3. Double-click the device and go to `Settings` > `Network` > `802.1X`.
4. Choose your EAP method from the menu.
5. Enter any required credentials and load any necessary certificates.
6. Press Save to save the 802.1X settings to the device.
7. Enable 802.1X and select Reboot now.

Step 2: Connect to a Credentialed Network

1. Connect your device to the credentialed network.
2. Ensure that Designer is connected to the credentialed network.
3. Verify that the device appears in Designer. If it doesn't, reconnect to the test network and check all 802.1X settings for the selected EAP method.

Choose a Network Mode for 802.1X

For devices with dual RJ45 ports, 8021.X behavior varies depending on the network mode. Use the information below to ensure your system configuration and device's network mode fit your security needs. MAC Authentication Bypass can be used alongside or instead of 802.1X, depending on the network mode on the device.

The APXD2, APXD4, and APXD8 have dual RJ45 ports and support three network modes: switched, split, and redundant. By default, the APX is set to switched, but split or redundant are recommended for 802.1X.

The NDX4, NDX4G, NDX8, and NDX8G have dual RJ45 ports and support only switched network mode.

802.1X in Switched Network Mode

Applies to: NDX4, NDX4G, NDX8, and NDX8G.

Applies to: APXD2, APX4, and APX8 when set to switched network mode.

When 802.1X is set up on a device in switched network mode, either the primary or the secondary port can be used for authentication.

Important: When one port is used for authentication, connecting a device to the other port will grant that device access to the credentialed network without authenticating it. This access may not be desirable for your credentialed network. To prevent this, MAC Authentication Bypass (MAB) can be used in addition to 802.1X.

802.1X in Split Network Mode

Applies to: APXD2, APX4, and APX8 when set to split network mode.

When 802.1X is set up on a device in split network mode, the primary port is used for authentication. In this mode, the secondary port does not support 802.1X. If authentication to the credentialed network is required on the secondary port, use MAC Authentication Bypass (MAB) instead.

Important: When the primary port is used for authentication in split mode, connecting a device to the secondary port will *not* grant that device access to the credentialed network.

Only control data is available on the credentialed network in split network mode. If you need audio on the credentialed network, use redundant network mode.

802.1X in Redundant Network Mode

Applies to: APXD2, APX4, and APX8 when set to redundant network mode.

When 802.1X is set up on a device in redundant network mode, the primary port is used for authentication. In this mode, the secondary port does not support 802.1X. If authentication to the credentialed network is required on the secondary port, use MAC Authentication Bypass (MAB) instead.

Important: When the primary port is used for authentication in redundant mode, connecting a device to the secondary port will *not* grant that device access to the credentialed network.

Both Dante audio and control are available on the credentialed network on the primary port in redundant network mode. Use redundant network node when both audio and control are needed.

Turn Off or Clear 802.1X Settings

You can turn off 802.1X settings temporarily, or clear them from the device. Open the device and go to `Settings` > `Network` > `802.1X`

- **Disable**: Click the 802.1X switch to turn off 802.1X settings. Click the switch again to enable 802.1X.
- **Clear**: Click Clear 802.1X settings to remove 802.1X settings from the device.

Note: Resetting to factory default clears all 802.1X settings.

Change 802.1X Settings

You may need to change a device's 802.1X settings if the enterprise's 802.1X settings are changing. The best way to do this is to change the 802.1X settings on the devices, and then make changes to the authentication server.

To change device settings:

1. While still connected to the credentialed network, find the device in Designer and go to `Settings` > `Network` > `802.1X`.
2. Make changes and click Save.
3. Make any changes to the authentication server.
4. Reboot your devices. The devices should connect to the credentialed network with the updated 802.1X settings.

Troubleshooting 802.1X Setup Issues

If the device doesn't appear in Designer on the credentialed network, there's a problem with the device's 802.1X settings. To troubleshoot, take the device off the credentialed network and connect it to the test network. You can make any necessary changes to the 802.1X settings, and then reconnect to the credentialed network.

If you attempt to enable 802.1X on a device, but the authentication fails, you will see this notification:

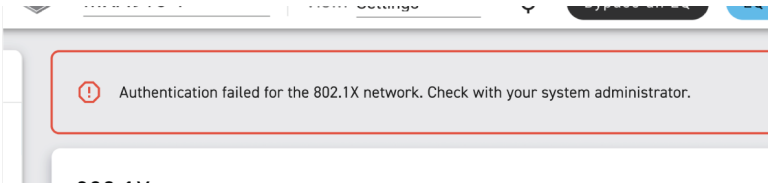

If this occurs, check with your system administrator.

MAC Authentication Bypass

MAC Authentication Bypass (MAB) is a network access control method used primarily in managed networks. MAB grants network access to devices based on their MAC addresses when other authentication protocols, such as 802.1X, are not available or supported.

In switched mode, when the device has 802.1X enabled, both RJ45 ports provide access to the credentialed network. If this is not desired, the network administrator must also use MAB to prevent unauthorized devices from accessing the credentialed network via the second port.

In the split and redundant network modes, the Dante interface on the secondary port does not support 802.1X. Therefore, if access to the credentialed network is required on these ports, the network administrator must use MAB.

Updating MXW neXt Firmware

Firmware is embedded software in each component that controls functionality. Periodically, new versions of firmware are developed to incorporate additional features and enhancements. To take advantage of design improvements, new versions of the firmware can be uploaded and installed using the Shure Update Utility. Download the software from www.shure.com/suu.

Perform the following steps to update the firmware:

CAUTION! Ensure the device has a stable network connection during the update. Do not turn off the device until the update is complete.

1. Connect the device and computer to the same network, set to the same subnet. (To update MXW neXt transmitters, place them in a docking station that is connected to the same network.)
2. Install and open the latest version of the Shure Update Utility.

   Note: *If you have previously installed the Shure Update Utility, launch the software and click* `Help` > `Check for Shure Update Utility updates` *to ensure you have the latest version.*

3. Click the Check For Updates... button to view new firmware versions available for download.
4. Select the desired firmware and press Download to download it to the Firmware Library.
5. From the Update Devices tab, select the new firmware and press Send Updates... to begin the firmware update, which overwrites the existing firmware on the device.

Firmware Versions and Compatibility

The firmware of all Shure devices has the form of MAJOR.MINOR.PATCH.BUILD (e.g., 1.2.14.0). To ensure interoperability, all rack and portable components from the same model family should be updated to the same MAJOR and MINOR firmware version numbers (e.g., 1.2.x.x).

Resetting MXW neXt Hardware

To move a device to a different room or installation, or if a device isn't appearing on the network after trying troubleshooting methods, perform a network reset, or a full factory reset.

From the Control Software

Under the `Settings` > `Reset` tab:

Reboot	Reboots the hardware.
Network Reset	Clears all stored network data and sets the network mode to Switched.
Restore Factory Defaults	Resets the device to factory default settings, designed for automatic compatibility with other Shure networked devices. **CAUTION:** A factory reset returns all audio settings to default and deletes all microphone links saved in the device.
Low Power Standby Mode (APXD2 only)	Enters low power standby mode. Short press the APXD2 hardware reset button to exit.

From the Hardware

Network Reset	Press and hold the recessed reset button for 5-8 seconds. LEDs will flash yellow to indicate the network settings have been reset, followed by the usual boot LED sequence.
Restore Factory Defaults	Press and hold the recessed reset button for more than 8 seconds to reset the device to factory default settings. LEDs will flash green to indicate the device has been reset to factory settings, followed by the usual boot LED sequence.

Note: To factory reset MXW neXt microphones, factory reset the docking station they're docked in.

MXW neXt Model Variations and Accessories

MXW neXt Device	Description		Part Number
All-In-One Transceiver/ Docking Station/DSP	2-Channel Access Point Transceiver with 2 Charging Ports and Intellimix DSP		MXWAPXD2
Access Point Transcievers	4-Channel Access Point		MXWAPX4
	8-Channel Access Point		MXWAPX8
Networked Docking Stations	2-Bay Docking Station (for Bodypack, Handheld, and Boundary Microphones)		MXWNDX2
	4-Bay Docking Station (for Bodypack, Handheld, and Boundary Microphones)		MXWNDX4
	8-Bay Networked Docking Station (for Bodypack, Handheld, and Boundary Microphones)		MXWNDX8
	4-Bay Networked Docking Station (for Gooseneck and Boundary Microphones)		MXWNDX4G
	8-Bay Networked Docking Station (for Gooseneck and Boundary Microphones)		MXWNDX8G
Transmitters	Bodypack	w/o lavalier microphone	MXW1X/O
	Handheld	w/ SM58 cartridge	MXW2X/SM58
		w/ SM86 cartridge	MXW2X/SM86
		w/ Beta 58 cartridge	MXW2X/BETA58
		w/ VP68 cartridge	MXW2X/VP68
	Boundary	Omnidirectional microphone	MXW6X/O
		Cardioid microphone	MXW6X/C

MXW neXt Device	Description		Part Number
	Gooseneck	Black base	MXW8X
Accessories	Rechargeable Li-Ion Battery	Compatible with MXW1X and MXW6X	SB906
		Compatible with MXW2X and MXW8X	SB908
	3.5mm-to-USB audio dongle		AMXWX-USBC-3.5mm
	Paintable cover for APX4/APX8		A-MXWAPX-CV

Lavalier Options

Microphone Description	Part Number
Microflex® Omnidirectional Subminiature Earset, Black	MX153B/O-TQG
Microflex Omnidirectional Subminiature Earset, Tan	MX153T/O-TQG
Microflex Omnidirectional Subminiature Earset, Cocoa	MX153C/O-TQG
Low-Profile Omnidirectional Lavalier, Black	WL183mB/O-TQG
Low-Profile Omnidirectional Lavalier, White	WL183mW/O-TQG
Low-Profile Supercardioid Lavalier, Black	WL184mB/O-TQG
Low-Profile Supercardioid Lavalier, White	WL184mW/O-TQG
Low-Profile Cardioid Lavalier, Black	WL185mB/O-TQG
Low-Profile Cardioid Lavalier, White	WL185mW/O-TQG
Omnidirectional Condenser Miniature Lavalier, Black	WL93

Gooseneck Options

Microphone Description	Polar Pattern	Length	Part Number
Bi-color LED status indicator	Cardioid	5" (12.7 cm)	MX405LP/C
	Supercardioid	5" (12.7 cm)	MX405LP/S
	Mini-shotgun	5" (12.7 cm)	MX405LP/MS
	Cardioid	10" (25.4 cm)	MX410LP/C
	Supercardioid	10" (25.4 cm)	MX410LP/S
	Cardioid	15" (38.1 cm)	MX415LP/C
	Supercardioid	15" (38.1 cm)	MX415LP/S
Light ring indicator	No cartridge included	5" (12.7 cm)	MX405RLP/N

Microphone Description	Polar Pattern	Length	Part Number
		10" (25.4 cm)	MX410RLP/N
		15" (38.1 cm)	MX415RLP/N
Capsule only	Cardioid	for any length	R185B
	Supercardioid	for any length	R184B
	Mini-shotgun	5" (12.7 cm)	R189B

AC Adapter (45W, USB-C, 2m cable)

USB Power Supply by Region	Part Number
USA, Japan, and Taiwan	SBC10-USB45WPD-UTJ
UK	SBC10-USB45WPD-UK
Europe	SBC10-USB45WPD-E
Argentina	SBC10-USB45WPD-AR
Australia	SBC10-USB45WPD-AZ
Brazil	SBC10-USB45WPD-BR
India	SBC10-USB45WPD-IN
South Korea	SBC10-USB45WPD-K

MXW neXt Specifications

MXW neXt System Specifications

RF Carrier Frequency Range

Band	Frequency Range	Region(s)	Unit Density**	
			Standard (SD)	High (HD)
Z10	1920 MHz – 1930 MHz	USA, Canada, Mexico	APX4/8: 40	APX4/8: 80
			APXD2: 30	APXD2: 60
Z11*	1880 MHz – 1900 MHz	Europe, South Africa, Asia, Australia, Middle East	APX4/8: 80	APX4/8: 160
			APXD2: 60	APXD2: 120
Z12	1884 MHz – 1906 MHz	Japan	APX4/8: 64 + 16†	APX4/8: 128 + 32†

Band	Frequency Range	Region(s)	Unit Density**	
			Standard (SD)	High (HD)
			APXD2: 48 + 12†	APXD2: 96 + 24†
Z13	1786 MHz – 1792 MHz	South Korea	APX4/8: 24	APX4/8: 48
			APXD2: 18	APXD2: 36
Z14	1910 MHz – 1920 MHz	Brazil, Latin America, South America	APX4/8: 40	APX4/8: 80
			APXD2: 30	APXD2: 60
Z15	1880 MHz – 1895 MHz	Taiwan	APX4/8: 64	APX4/8: 128
			APXD2: 48	APXD2: 96
Z16	1880 MHz – 1890 MHz	Phillippines	APX4/8: 40	APX4/8: 80
			APXD2: 30	APXD2: 60
Z18	1785 MHz – 1805 MHz	China	APX4/8: 80	APX4/8: 160
			APXD2: 60	APXD2: 120

* Maximum RF power for Egypt SKUs is less than 50 mW EIRP

** MXWAPXD2 transmits additional system information over the available spectrum, leaving fewer slots for microphone channels

† Additional channels available if no other PHS systems are detected

Working Range

45 m (150 ft)

Outdoor and line-of-sight between user and MXWAPX. Actual range depends on RF power setting, signal absorption, reflections, and interference.

Audio Frequency Response

30 Hz – 19 kHz (+0.5dB/3dB)

Dependent on microphone type and audio output. Microphone transducers not included in measurement. MXWAPX set to Direct Mode.

Digital Audio Processing

24 bit / 48 kHz

Digital Audio Networking

Dante, AES67

Security

AES-256 Encryption

Dante and DECT over-the-air

Latency

18 ms (nominal)

MXW1/2/6/8X microphone input to MXWAPX output. MXWAPX set to SD RF density mode. Latency depends on output port and RF density mode.

System Audio Polarity

Positive pressure on MXW1X/2X/6X/8X microphone diaphragm produces positive voltage on + pin (with respect to - pin) of MXWAPX analog output and a positive digital signal on the MXWAPX USB and Dante outputs.

Radio Transmission

Time Division Multiple Access (TDMA), Gaussian Frequency Shift Keying (GFSK), 365 kHz max. deviation

DECT RF Sensitivity

< -90 dBm

DECT RF Transmission Power

RF Power: Low	2 dBm; 2 mW
RF Power: Medium	9 dBm; 8 mW
RF Power: High	16 dBm (Egypt: 12 dBm); 40 mW (Egypt: 16 dBm)
RF Power: Maximum	21 dBm (Egypt: 15 dBm); 125 mW (Egypt: 32 mW)

Cable Requirements

Cat 5e or higher, shielded, 100 m maximum between network devices

Network Addressing Capability

DHCP, link-local, static

Operating Temperature Range

5°C (41°F) - 40°C (104°F)

Operating Humidity

RH < 95%

Storage Temperature Range

-20°C (-4°F) to 60°C (140°F)

MXWAPXD2 2-Channel Access Point Dock Specifications

Analog Input

Maximum Input Level

Line Level Input	+28 dBV

Aux Level Input	+15 dBV

Frequency Response

20 Hz – 26 kHz (+0.5 dB / -3 dB)

Total Harmonic Distortion + Noise

Line Level Input	0.03% (typical)
Aux Level Input	0.02% (typical)

Dynamic Range

115 dB (A-weighted), 113 dB (unweighted), typical

Line and Aux level input setting. Measured at Dante output. MXWAPXD2 set to Direct Mode.

Preamplifier Equivalent Input Noise

Line Level Input	-87 dBV (A-weighted), typical, 22 Hz – 22 kHz BW
Aux Level Input	-99 dBV (A-weighted), typical, 22 Hz – 22 kHz BW

Input Impedance

Line Level Input	~2.9 kΩ @ 1 kHz
Aux Level Input	~3.1 kΩ @ 1 kHz

Configuration

Balanced

Type

3-pin Phoenix: Pin 1 = Ground, Pin 2 = Audio +, Pin 3 = Audio -

Analog Outputs

Maximum Output Level

Line Level Output	+17 dBV
Aux Level Output	+6 dBV
Mic Level Output	-13 dBV

Frequency Response

20 Hz – 22 kHz (+0.5 dB / -3 dB)

Total Harmonic Distortion + Noise

0.02%, typical

Line, Aux, Mic output level settings

Dynamic Range

118 dB (A-weighted), 115 dB (unweighted), typical

Audio injected at Dante input. MXWAPXD2 set to Direct Mode.

Load Impedance
>600 Ω, typical

Type
3-pin Phoenix: Pin 1 = Ground, Pin 2 = Audio +, Pin 3 = Audio -

Power

Power Requirement
4.5V – 5.5V, 2500 mA (via USB-C)

Power Consumption
12.5 W (typical)

Network Interface
Dual – RJ45: Gigabit Ethernet, Dante digital audio

Docking Interface
5 V / 0.5 A

SBC10-USB45WPD-* Power Supply

Input (100-240 V AC)	50-60 Hz, 1.2 A
Output (5.0 V / 9.0 V / 12.0 V / 15.0 V DC)	3.0 A, 45.0 W (max)
Output (20.0 V DC)	2.25 A, 45.0 W (max)

* Varies by region: UTJ, UK, E, AR, AZ, BR, IN, K

Housing

Antenna Type
Internal Shure Custom PIFA

Housing
Molded Plastic Cover with Cast Zinc Metal Base

Dimensions
252.7mm × 202.7mm × 48.8mm (9.95" × 7.98" × 1.92")

Weight
1111g

MXWAPX4, MXWAPX8 Access Point Specifications

Analog Outputs

Maximum Output Level

Line Level Output	+17 dBV
Aux Level Output	+6 dBV
Mic Level Output	-13 dBV

Frequency Response

20 Hz – 22 kHz (+0.5 dB / -3 dB)

Total Harmonic Distortion + Noise

0.02%, typical

Line, Aux, Mic output level settings

Dynamic Range

118 dB (A-weighted), 115 dB (unweighted), typical

Audio injected at Dante input. MXWAPX set to Direct Mode.

Load Impedance

>600 Ω, typical

Type

3-pin Phoenix: Pin 1 = Ground, Pin 2 = Audio +, Pin 3 = Audio -

Power

Power Requirement

37V – 57V, 12.95 W PoE Class 3

Network Interface

Dual – RJ45: Gigabit Ethernet, Dante digital audio

Housing

Antenna Type

Internal Shure Custom PIFA

Housing

Molded Plastic Cover with Cast Zinc Metal Base

Dimensions

252.7mm × 202.7mm × 48.8mm (9.95" × 7.98" × 1.92")

Weight
1111g

MXWNDX2, MXWNDX4, MXWNDX4G, MXWNDX8, MXWNDX8G Networked Docking Station Specifications

Operating Temperature Range
5°C (41°F) - 40°C (104°F)

Storage Temperature Range
-20°C (-4°F) to 60°C (140°F)

Power Supply

NDX2	37V – 57V, 12.95 W PoE Class 3
NDX4, NDX8, NDX4G, NDX8G	USB 15 V / 3 A power supply (SBC10-USB45WPD-*)

* Varies by region: UTJ, E, UK, IN, BR, AR, AZ, CHN, K

Bluetooth Frequency Range
2402 MHz - 2480 MHz

Bluetooth Output Power
10 dBm EIRP

Antenna Type
Internal

Specifications for MXW neXt Transmitters

SBC10-USB15WSUSTWJ Power Supply (USA, Canada, Taiwan, Japan)

Input	100-240 V AC, 50-60 Hz, 0.6 A
Output	5 V DC, 3.0 A, 15.0 W (max)

SBC10-USB Power Supply (all other countries)

Input	100-240 V AC, 50-60 Hz, 0.2 A
Output	5 V DC, 1.0 A, 5.0 W (max)

Microphone Transmitter Output Power

Low	-2 dBm
Medium	5 dBm
Medium High	12 dBm
High	17 dBm

Headphone Output Configuration
Dual mono

Will drive stereo and mono headphones

Headphone Output Connector Type

USB-C Audio Adapter Accessory Mode, via USB-C to TRS Adapter

Headphone Output Connector Pinout

USB Dn = Tip	Left audio output
USB Dp = Ring	Right audio output
USB SBU1/2 = Sleeve	Ground

Charge Connector

USB 2.0 Type C

Antenna Type

Internal chip antenna

Housing

Molded plastic

MXW1X Hybrid Bodypack Specifications

External Microphone Input

Maximum Input Level

-1 dBV

Frequency Response

27 Hz – 19 kHz (+0.5 dB / -3 dB)

Measured at MXWAPX Dante output. Microphone transducer not included in measurement. MXWAPX set to Direct Mode.

Dynamic Range

112 dB (A-weighted), 111 dB (unweighted), typical

Measured at MXWAPX Dante output. Microphone transducer not included in measurement. MXWAPX set to Direct Mode.

Preamplifier Equivalent Input Noise

-116 dBV (A-weighted), typical

22 Hz – 22 kHz BW

Input Impedance

~30 kΩ @ 1 kHz

Configuration

Unbalanced

Connector Type
4-Pin male mini connector (TA4M)

Pinout
1 = Ground, 2 = 5V DC, 3 = Audio Input, 4 = Active Load

Internal Microphone Input

Frequency Response
27 Hz – 20 kHz (+5 dB / -3 dB)

Dynamic Range
112 dB (A-weighted), 111 dB (unweighted), typical

Measured at MXWAPX Dante output. MXWAPX set to Direct Mode.

Type
Omnidirectional Digital MEMS microphone

Headphone Output

Maximum Output Level
-1 dBV

Volume = 100%

Frequency Response
19 Hz – 19 kHz (+0.5 dB / -3 dB)

Dynamic Range
100 dB (A-weighted), 98 dB (unweighted), typical

Audio injected at MXWAPX Dante input. Headphone transducer not included in measurement. Volume = 100%.

Load Impedance
>8 kΩ, typical

Headphone outputs are protected against short circuits.

Max Headphone Output Power
1.5 mW

8Ω load, 1 kHz sine wave

Power

Battery Type
Shure SB906 Rechargeable Li-Ion

Battery Life

Up to 17 hours

Measured with a new battery. Runtimes vary depending on conditions like headphone level, battery health and RF density mode.

Battery Charge Time From Empty

Docked in APXD2	3 hours
Docked in NDX2/4/8	3 hours

Housing

Dimensions

101.5 mm × 47.0 mm × 23.5 mm (3.99" × 1.85" × 0.93")

Weight

With Battery	0.095 kg
Without Battery	0.075 kg

MXW2X Handheld Microphone Specifications

External Microphone Head Input

Maximum Input Level

-9 dBV

Frequency Response

40 Hz – 14 kHz (+0.5 dB / -3 dB)

Measured at MXWAPX Dante output. Microphone transducer not included in measurement. MXWAPX set to Direct Mode.

Dynamic Range

111 dB (A-weighted), 108 dB (unweighted), typical

Measured at MXWAPX Dante output. Microphone transducer not included in measurement. MXWAPX set to Direct Mode.

Preamplifier Equivalent Input Noise

-116 dBV (A-weighted), typical

22 Hz – 22 kHz BW

Input Impedance

2 kΩ @ 1 kHz

Configuration
Unbalanced

Microphone Capsule
SM58, SM86, Beta 58, VP68

Headphone Output

Maximum Output Level
-1 dBV

Volume = 100%

Frequency Response
27 Hz – 19 kHz (+0.5 dB / -3 dB)

Dynamic Range
100 dB (A-weighted), 98 dB (unweighted), typical

Audio injected at MXWAPX Dante input. Headphone transducer not included in measurement. Volume = 100%.

Load Impedance
>8 kΩ, typical

Headphone outputs are protected against short circuits.

Max Headphone Output Power
1.5 mW

8Ω load, 1 kHz sine wave

Power

Battery Type
Shure SB908 Rechargeable Li-Ion

Battery Life
Up to 39 hours

Measured with a new battery. Runtimes vary depending on conditions like headphone level, battery health and RF density mode.

Battery Charge Time From Empty

Docked in APXD2	7 hours
Docked in NDX2/4/8	4 hours

Housing

Dimensions

228.5 mm × 51.0 mm × 51.0 mm (8.99" × 2.01" × 2.01")

Weight

With Battery	0.380 kg
Without Battery	0.330 kg

MXW6X Boundary Microphone Specifications

Internal Microphone Input

Frequency Response

27 Hz – 19 kHz (+3 dB / -3 dB)

Measured at MXWAPX Dante output. MXWAPX set to Direct Mode.

Dynamic Range

112 dB (A-weighted), 110 dB (unweighted), typical

Measured at MXWAPX Dante output. MXWAPX set to Direct Mode.

Type

Cardioid or Omnidirectional Condensor Capsule

Headphone Output

Maximum Output Level

-1 dBV

Volume = 100%

Frequency Response

27 Hz – 19 kHz (+0.5 dB / -3 dB)

Dynamic Range

100 dB (A-weighted), 98 dB (unweighted), typical

Audio injected at MXWAPXD2 Dante input. Headphone transducer not included in measurement. Volume = 100%.

Load Impedance

>8 kΩ, typical

Headphone outputs are protected against short circuits.

Max Headphone Output Power

1.5 mW

8Ω load, 1 kHz sine wave

Power

Battery Type

Shure SB906 Rechargeable Li-Ion

Battery Life

Up to 17 hours

Measured with a new battery. Runtimes vary depending on conditions like headphone level, battery health and RF density mode.

Battery Charge Time From Empty

Docked in APXD2	3 hours
Docked in NDX2/4/8/4G/8G	3 hours

Docked in an APXD2

Housing

Dimensions

118.43 mm × 46.99 mm × 26.10 mm (4.66" × 1.85" × 1.03")

Weight

With Battery	0.115 kg
Without Battery	0.090 kg

MXW8X Gooseneck Base Specifications

External Microphone Input

Maximum Input Level

-1 dBV

Frequency Response

26Hz - 20kHz (+3dB/-3dB)

Measured at MXWAPX Dante output. Microphone transducer not included in measurement. MXWAPX set to Direct Mode.

Dynamic Range

113 dB (A-weighted), 111 dB (unweighted), typical

Measured at MXWAPX Dante output. Microphone transducer not included in measurement. MXWAPX set to Direct Mode.

Preamplifier Equivalent Input Noise

-117 dBV (A-weighted), typical

22 Hz – 22 kHz BW

Input Impedance

42 kΩ @ 1 kHz

Configuration

Unbalanced

Connector Type

6-pin connector for Shure MX405/410/415

Headphone Output

Maximum Output Level

-1 dBV

Volume = 100%

Frequency Response

27 Hz – 19 kHz (+0.5 dB / -3 dB)

Dynamic Range

100 dB (A-weighted), 98 dB (unweighted), typical

Audio injected at MXWAPX Dante input. Headphone transducer not included in measurement. Volume = 100%.

Load Impedance

>8 kΩ, typical

Headphone outputs are protected against short circuits.

Max Headphone Output Power

1.5 mW

8Ω load, 1 kHz sine wave

Power

Battery Type

Shure SB908 Rechargeable Li-Ion

Battery Life

Up to 30 hours

Measured with a new battery. Runtimes vary depending on conditions like headphone level, battery health and RF density mode.

Battery Charge Time From Empty

Docked in NDX4G/8G	4 hours

Housing

Dimensions

133.32mm × 78.20mm × 34.08mm (5.249" × 3.079" × 1.342")

Weight

With Battery	0.245 kg
Without Battery	0.195 kg

No microphone attached

Regulatory Information for Wireless Products Utilizing TV and DECT Frequency Bands

CE Notice

Hereby, Shure Incorporated declares that this product with CE Marking has been determined to be in compliance with European Union requirements.

The full text of the EU declaration of conformity is available at the following site: https://www.shure.com/en-EU/support/declarations-of-conformity.

UKCA Notice

Hereby, Shure Incorporated declares that this product with UKCA Marking has been determined to be in compliance with UKCA requirements.

The full text of the UK declaration of conformity is available at the following site: https://www.shure.com/en-GB/support/declarations-of-conformity.

Cybersecurity STATEMENT OF COMPLIANCE

Product Type: Relevant connectable products defined as internet-connectable products or network-connectable products, in line with inter alia Product Security and Telecommunications Infrastructure Act 2022.

Manufacturer Statement: We, Shure Incorporated, certify and declare as manufacturer under our sole responsibility, that the above-mentioned product(s) conform(s) to the legislation as mentioned under Attachment 1 – to Cybersecurity Statement of Compliance listed here: https://www.shure.com/en-GB/about-us/security.

Information on how to report security issues: The latest version of Shure's Disclosure policy can be found at the following link: https://www.shure.com/en-GB/about-us/security

Security update periods: Shure provides support regarding hardware and software updates that continue the integral cyber security safety of Shure products up to 24 months after end of life (AEOL). For the full statement regarding Shure's product support policy, and information regarding products end of life status information can be found at the following link: https://www.shure.com/en-GB/about-us/security

Manufacturer:
Shure Incorporated 5800 Touhy Avenue
Niles, Illinois, 60714-4608 U.S.A. Website: www.Shure.com.

Technical documentation is kept at:
Shure Incorporated, Corporate Global Compliance Engineering Division

UK Importer/Representative:
Shure UK Limited
Unit 2, The IO Centre, Lea Road, Waltham Abbey, Essex, EN9 1AS, U.K.
Phone: +44 (0)1992 - 703058
Email: EMEAsupport@shure.de

On behalf of Manufacturer:

Chad Ayers
08 May 2025 Niles, Illinois
Senior Director, Global Compliance

FCC Notice

This equipment has been tested and found to comply with the limits for a Class B digital device pursuant to Part 15 of the FCC Rules. These limits are designed to provide reasonable protection against harmful interference when the equipment is operated in a residential installation. This equipment generates, uses, and can radiate radio frequency energy and, if not installed and used in accordance with the instructions, may cause harmful interference with radio communications. However, there is no guarantee that interference will not occur in a particular installation. If this equipment does cause harmful interference with radio or television reception, which can be determined by turning the equipment off and on, you are encouraged to try to correct the interference by one or more of the following measures:

- Reorient or relocate the antenna of the radio/television receiver.
- Increase the separation between this equipment and the radio/television receiver.
- Plug the equipment into a different outlet so that the equipment and the radio/television receiver are on different power mains branch circuits.
- Consult a representative of Shure or an experienced radio/television technician for additional suggestions.

This device complies with Part 15 of the FCC Rules. Operation is subject to the following two conditions:

1. This device may not cause harmful interference.
2. This device must accept any interference received, including interference that may cause undesired operation.

Notice: The FCC regulations provide that changes or modifications not expressly approved by Shure Incorporated could void your authority to operate this equipment.

For information regarding responsible party and other matters relating to FCC compliance, please contact Shure Incorporated, 5800 W. Touhy Avenue, Niles, Illinois 60714-4608 U.S.A. shure.com/contact

This equipment complies with FCC radiation exposure limits set forth for an uncontrolled environment. End user must follow the specific operating instructions for satisfying RF exposure compliance. This transmitter must not be co-located or operating in conjunction with any other antenna or transmitter.

Industry Canada (IC) Notices

This device contains licence-exempt transmitter(s)/receiver(s) that comply with Innovation, Science and Economic Development Canada's licence-exempt RSS(s). Operation is subject to the following two conditions:

1. This device may not cause interference.
2. This device must accept any interference, including interference that may cause undesired operation of the device.

L'émetteur/récepteur exempt de licence contenu dans le présent appareil est conforme aux CNR d'Innovation, Sciences et Développement économique Canada applicables aux appareils radio exempts de licence. L'exploitation est autorisée aux deux conditions suivantes :

1. L'appareil ne doit pas produire de brouillage;
2. L'appareil doit accepter tout brouillage radioélectrique subi, même si le brouillage est susceptible d'en compromettre le fonctionnement.

This Class B digital apparatus complies with Canadian ICES-003. Cet appareil numérique de la classe B est conforme à la norme NMB-003 du Canada.

Canada Warning for Wireless

This device operates on a no-protection, no-interference basis. Should the user seek to obtain protection from other radio services operating in the same TV bands, a radio licence is required. For further details, consult Innovation, Science and Economic Development Canada's document Client Procedures Circular CPC-2-1-28, Voluntary Licensing of Licence-Exempt Low-Power Radio Apparatus in the TV Bands.

Ce dispositif fonctionne selon un régime de non_brouillage et de non_protection. Si l'utilisateur devait chercher à obtenir une certaine protection contre d'autres services radio fonctionnant dans les mêmes bandes de télévision, une licence radio serait requise. Pour en savoir plus, veuillez consulter la Circulaire des procédures concernant les clients CPC_2_1_28, Délivrance de licences sur une base volontaire pour les appareils radio de faible puissance exempts de licence et exploités dans les bandes de télévision d'Innovation, Sciences et Développement économique Canada.

This equipment complies with ISED radiation exposure limits set forth for an uncontrolled environment. End user must follow the specific operating instructions for satisfying RF exposure compliance. This transmitter must not be co-located or operating in conjunction with any other antenna or transmitter.

Cet équipement est conforme aux limites d'exposition aux rayonnements ISED établies pour un environnement non contrôlé. L'utilisateur final doit suivre les instructions spécifiques pour satisfaire les normes. Cet émetteur ne doit pas être co-implanté ou fonctionner en conjonction avec toute autre antenne ou transmetteur.

Additional Canadian information on RF exposure also can be found at the following Web address: http://www.ic.gc.ca/eic/site/smt-gst.nsf/eng/sf08792.html

ANATEL Notice

Este equipamento não tem direito à proteção contra interferência prejudicial e não pode causar interferência em sistemas devidamente autorizados. Para maiores informações, consulte o site da ANATEL – http://www.anatel.gov.br.

IFETEL Notice

La operación de este equipo está sujeta a las siguientes dos condiciones: (1) es posible que este equipo o dispositivo no cause interferencia perjudicial y (2) este equipo o dispositivo debe aceptar cualquier interferencia, incluyendo la que pueda causar su operación no deseada.

MIC Notice

運用に際しての注意

この機器の使用周波数帯では、電子レンジ等の産業·科学·医療用機器のほか工場の製造ライン等で使用されている移動体識別用の構内無線局（免許を要する無線局）及び特定小電力無線局（免許を要しない無線局）並びにアマチュア無線局（免許を要する無線局）が運用されています。

1. この機器を使用する前に、近くで移動体識別用の構内無線局及び特定小電力無線局並びにアマ　チュア無線局が運用されていないことを確認して下さい。
2. 万一、この機器から移動体識別用の構内無線局に対して有害な電波干渉の事例が発生した場合には、 速やかに使用周波数を変更するか又は電波の発射を停止した上、下記連絡先にご連絡頂き、混　信回避のための処置等（例えば、パ―ティションの設置など）についてご相談して下さい。
3. その他、この機器から移動体識別用の特定小電力無線局あるいはアマチュア無線局に対して有害な電波干渉の事例が発生した場合など何かお困りのことが起きたときは、保証書に記載の販売代　理店または購入店へお問い合わせください。代理店および販売店情報は Shure 日本語ウェブサイト　http://www.shure.co.jp でもご覧いただけます。

現品表示記号について

現品表示記号は、以下のことを表しています。 この無線機器は 2.4GHz 帯の電波を使用し、変調方式は「FH-SS」方式、想定与干渉距離は 10m です。 2,400MHz～2,483.5MHz の全帯域を使用し、移動体識別装置の帯域を回避することはできません。

K-DECT Warning Statement

이 장치는 보안성이 없으며 운용 중 혼신 가능성이 있음

NCC Notice

低功率射頻器材技術規範

取得審驗證明之低功率射頻器材，非經核准，公司、商號或使用者均不得擅自變更頻率、加大功率或變更原設計之特性及功能。低功率射頻器材之使用不得影響飛航安全及干擾合法通信；經發現有干擾現象時，應立即停用，並改善至無干擾時方得繼續使用。前述合法通信，指依電信管理法規定作業之無線電通信。低功率射頻器材須忍受合法通信或工業、科學及醫療用電波輻射性電機設備之干擾。

614MHz-703MHz: 使用頻段供其他通訊業務使用時，器材應即停止使用

減少電磁波影響，請妥適使用。

NBTC Notice

เครื่องโทรคมนาคมและอุปกรณ์นี้มีความสอดคล้องตามมาตรฐานหรือข้อกำหนดทางเทคนิคของ กสทช.

部件名称	有害物质									
	Pb	Cd	Hg	Cr(VI)	PBB	PBDE	DBP	BBP	DIBP	DEHP
电路模块	X	○	○	○	○	○	○	○	○	○
金属模块	X	○	○	○	○	○	○	○	○	○
线缆及其组件	X	○	○	○	○	○	○	○	○	○
电源适配器*	X	○	○	○	○	○	○	○	○	○
锂电池组*	X	○	○	○	○	○	○	○	○	○

注 1: ○: 表示该有害物质在该部件所有均质材料中的含量均不超出电器电子产品有害物质限制使用国家标准要求。
X: 表示该有害物质至少在该部件某一均质材料中的含量超出电器电子产品有害物质限制使用国家标准要求。
注 2: 本产品大部分的部件采用无害的环保材料制造，含有有害物质的部件皆因全球技术发展水平的限制而无法实现有害物质的替代。
注 3: 以上未列出的部分,表明其有害物质含量均不超出电器电子产品有害物质限制使用国家标准要求
*:表示如果包含部分

Environmental Regulatory Information

Waste Electrical and Electronic Equipment (WEEE) Directive

In the European Union and the United Kingdom, this label indicates that this product should not be disposed of with household waste. It should be deposited at an appropriate facility to enable recovery and recycling.

Registration, Evaluation, Authorization of Chemicals (REACH) Directive

REACH (Registration, Evaluation, Authorization of Chemicals) is the European Union (EU) and the United Kingdom (UK) chemical substances regulatory framework. Information on substances of very high concern contained in Shure products in a concentration above 0.1% weight over weight (w/w) is available upon request.

Recycling Information

Please consider the environment, electric products and packaging are part of regional recycling schemes and do not belong to regular household waste.

Certifications

Regulatory Model Number (RMN)

For regulatory identification purposes your product has been assigned a regulatory model number (RMN). This regulatory model number should not be confused with product number.

RMN: MXW1X	**Product Numbers:** MXW1X/O Z10, MXW1X/O Z11, MXW1X/O Z12, MXW1X/O Z13, MXW1X/O Z14, MXW1X/O Z15, MXW1X/O Z16, MXW1X/O Z18
RMN: MXW2X	**Product Numbers:** MXW2X Z10, MXW2X Z11, MXW2X Z12, MXW2X Z13, MXW2X Z14, MXW2X Z15, MXW2X Z16, MXW2X Z18
RMN: MXW6X	**Product Numbers:** MXW6X/C Z10, MXW6X/C Z11, MXW6X/C Z12, MXW6X/C Z13, MXW6X/C Z14, MXW6X/C Z15, MXW6X/C Z16, MXW6X/C Z18, MXW6X/O Z10, MXW6X/O Z11, MXW6X/O Z12, MXW6X/O Z13, MXW6X/O Z14, MXW6X/O Z15, MXW6X/O Z16, MXW6X/O Z18
RMN: MXW8X	**Product Numbers:** MXW8X Z10, MXW8X Z11, MXW8X Z12, MXW8X Z13, MXW8X Z14, MXW8X Z15, MXW8X Z16, MXW8X Z18
RMN: MXWAPXD2	**Product Numbers:** MXWAPXD2 Z10, MXWAPXD2 Z11, MXWAPXD2 Z12, MXWAPXD2 Z13, MXWAPXD2 Z14, MXWAPXD2 Z15, MXWAPXD2 Z16, MXWAPXD2 Z18
RMN: MXWAPX	**Product Numbers:** MXWAPX4 Z10, MXWAPX4 Z11, MXWAPX4 Z12, MXWAPX4 Z13, MXWAPX4 Z14, MXWAPX4 Z15, MXWAPX4 Z16, MXWAPX4 Z18, MXWAPX8 Z10,

	MXWAPX8 Z11, MXWAPX8 Z12, MXWAPX8 Z13, MXWAPX8 Z14, MXWAPX8 Z15, MXWAPX8 Z16, MXWAPX8 Z18

FCC / IC ID

FCC ID: DD4MXW1X, DD4MXW2X, DD4MXW6X, DD4MXW8X, DD4MXWAPXD2, DD4MXWNDX2, DD4MXWNDX4, DD4MXWNDX4G, DD4MXWNDX8, DD4MXWNDX8G, DD4MXWAPX

IC: 616A-MXW1X, 616A-MXW2X, 616A-MXW6X, 616A-MXW8X, 616A-MXWAPXD2, 616A-MXWNDX2, 616A-MXWNDX4, 616A-MXWNDX4G, 616A-MXWNDX8, 616A-MXWNDX8G, 616A-MXWAPX

Energy Efficiency

External Power Supply meets:

1. The U.S. Energy Conservation Standards specified in the Code of Federal Regulations at 10 CFR 430 32(w).
2. EU COMMISSION REGULATION (EU) 2019/1782 of 1 October 2019: Ecodesign requirements for External Power Supply.
3. Australian Standard requirements of AS/NZS 4665.1:2005 and AS/NZS 4665.2:2005.

Battery Charger System meets:

1. The U.S. Energy Conservation Standards specified in the Code of Federal Regulations at 10 CFR 430 32(z)
2. Canada NRCan standard: CAN/CSA-C381.2

Certification and Compliance Markings

Trademarks

Audinate®, the Audinate logo and Dante® are trademarks of Audinate Pty Ltd.