MODEL #

SPK-30W-12V

30W ACTIVE HORN ***SPEAKER***

- BUILT-IN CLASS-D AMPLIFIER
- TALK THROUGH MOBILE OR VMS
- WORKS WITH IP CAMS WITH RCA INPUT
- POWERED BY 12V CAMERA
- STARTUP IN LESS THAN 1S
- 108dB SOUND OUTPUT

Experience the pinnacle of audio innovation with the **SPK-30W-12V**, our 12V DC powered speaker, setting new standards in sound technology. Boasting an extraordinary 108dB sound output and a wide frequency range from 400Hz to 8kHz, it guarantees an unparalleled audio journey. Powered by a 12V camera, it ignites to life in less than 1 second, ready to captivate with its built-in Class-D amplifier. Seamlessly communicate via mobile or VMS, while effortlessly integrating with IP cams featuring RCA input, expanding your audio horizons like never before. This speaker is a great companion for security and deterrence.

2025 Global Surveillance Distribution, G.S.D Group, and G.S.D are registered trade names of Global Surveillance Distribution Group, Inc., a corporation under the laws of Canada and other jurisdictions. We reserve the right to change product designs, specifications, and features without notice or liability. Information is subject to change and is not guaranteed for accuracy or completeness.

30W ACTIVE HORN **SPEAKER**

MODEL #
SPK-30W-12V

CONNECTIONS

Rated Power	30W
Power Supply	DC12V
SPL(1W/1M)	96dB
MAX. SPL@1M	108dB
Freq. Response	400Hz-8KHz
Dispersion Angle	230 degree
Coverage Pattern Angle	60 degrees horizontal 90 degrees vertical at 2kHz
Network Protocol	SIP, ONVIF, HTTP, IPv4, DHCP, RTSP, RTP, RTCP, TCP, UDP, ARP, FTP, TFTP, NFS, NTP
Audio Streaming	Full echo cancellation
Audio Support	OPUS 48 kHz, MP3 44.1 kHz, G.722 ADPCM 16 kHz, G.711 PCMU 8 kHz, G.711 PCMA 8 kHz
Network Security Protocol	HTTPS, TLS v1.2/v1.3, host-based firewall
Approvals	CE, FCC, Rohs
Material & Finish	ABS (IP67 Waterproof), White
Product Dimension	285 x 205x 290 mm
Installation	Bracket mount
Condition Temperatures	Operating: : -30 ° — +60 °, Storage: -40 ° — +70 °

DIMENSIONS

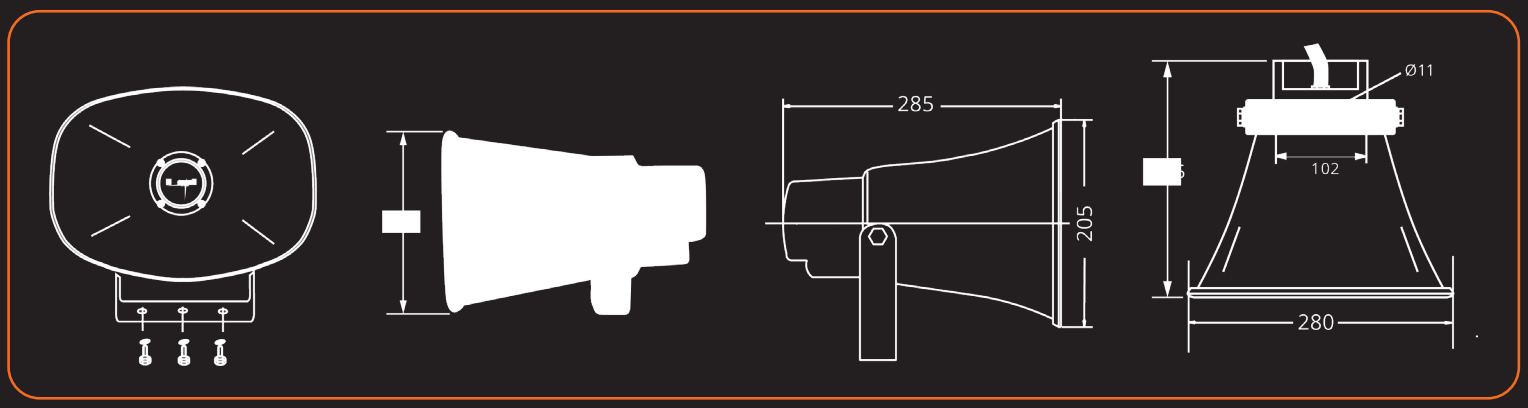

2025 Global Surveillance Distribution, G.S.D Group, and G.S.D are registered trade names of Global Surveillance Distribution Group, Inc., a corporation under the laws of Canada and other jurisdictions. We reserve the right to change product designs, specifications, and features without notice or liability. Information is subject to change and is not guaranteed for accuracy or completeness.

30W ACTIVE HORN **SPEAKER**

MODEL #
SPK-30W-12V

CONNECTIONS

Rated Power	30W
Power Supply	DC12V
SPL(1W/1M)	96dB
MAX. SPL@1M	108dB
Freq. Response	400Hz-8KHz
Dispersion Angle	230 degree
Enclosure Material	ABS
Dimension	285 x 205x 290 mm
Installation	Bracket mount
Finish	White

DIMENSIONS

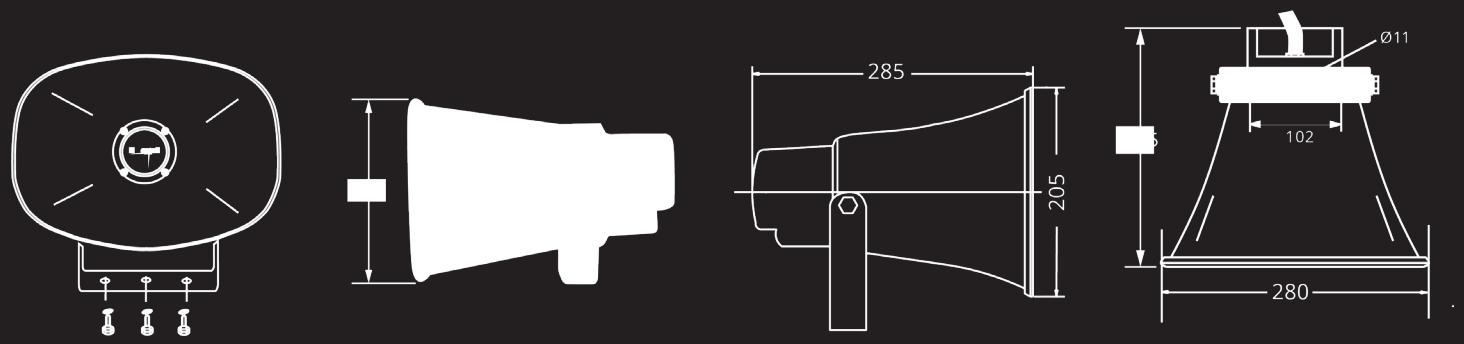

DOWNLOAD THE SMART GUARDIAN APP

GET IT ON Google Play

Available on the App Store

WWW.GSDGROUPINC.COM **A CANADIAN ENTERPRISE**

2025 Global Surveillance Distribution, G.S.D Group, and G.S.D are registered trade names of Global Surveillance Distribution Group, Inc., a corporation under the laws of Canada and other jurisdictions. We reserve the right to change product designs, specifications, and features without notice or liability. Information is subject to change and is not guaranteed for accuracy or completeness.

SECURITY. INNOVATION. RELIABILITY.

POWERED BY G.S.D GROUP INC.

At G.S.D Group, we design and deliver innovative, reliable, and high-performance security solutions that protect people, businesses, and critical infrastructure. From intelligent surveillance and access control to enterprise software and AI-powered technologies, we provide complete security ecosystems built for today's challenges and tomorrow's opportunities.

STAY CONNECTED

CONTACT US

YOUTUBE

LINKEDIN

NEWSLETTER

CONNECTION & INTERFACES

8518.22.20.00

HS CODE

6 28308 72263 1

UPC CODE

DOWNLOAD OUR APP: OV CONNECT

OV CONNECT

GET IT ON Google Play

Available on the App Store

2025 Global Surveillance Distribution, G.S.D Group, and G.S.D are registered trade names of Global Surveillance Distribution Group, Inc., a corporation under the laws of Canada and other jurisdictions. We reserve the right to change product designs, specifications, and features without notice or liability. Information is subject to change and is not guaranteed for accuracy or completeness.