GV-GEBF4802 AI 4MP H.265 Super Low Lux WDR Pro Full Color Warm LED IR Eyeball Dome IP Camera

- AI deep learning: AI Perimeter Protection & Classification (Human, Vehicle)
- 1/3" progressive scan CMOS sensor
- Min. illumination at 0.005 lux
- Triple streams from H.265, H.264 or MJPEG
- Up to 30 fps at 2560 x 1440
- Wide Dynamic Range Pro (WDR Pro)
- Smart warm LED distance up to 30 m (100 ft)
- Intelligent IR
- IR distance up to 30 m (100 ft)
- Ingress protection (IP67)
- Vandal resistance (IK10 for metal casing)
- 3-axis mechanism (pan / tilt / rotate)
- Built-in microphone
- Built-in microSD card slot (SD / SDHC / SDXC) for local storage
- DC 12V / PoE (IEEE 802.3af)
- AI analytics (Line Crossing, Region Intrusion)
- Smart lighting switch between IR LED (for motion detection) and Warm LED (for people, vehicle and motorcycle detection)
- 3D noise reduction
- Motion detection
- Text overlay
- Privacy mask
- 21 languages supported
- ONVIF (Profile G, S, T, M) conformant

Introduction

GV-GEBF4802 is a 4 MP outdoor eyeball dome IP camera, equipped with a smart warm LED for full color surveillance during nighttime. The camera supports H.265 video codec to achieve a better compression ratio while maintaining high-quality pictures at reduced network bandwidth. GV-GEBF4802 adheres to IP67 and IK10 standards and can be powered through PoE.

Empowered by deep learning algorithms, AI technology distinguishes humans and vehicles from other moving objects. Integrated with GeoVision Video Management Software (GV-VMS), it supports AI perimeter protection, real-time alert, playback, and more.

This camera model (**GV-GEBF4802-2F**) is available in two colors: **White** and **Charcoal**.

Models

Model	Iris	Focal Length (mm)	Horizontal FOV	Maximum Aperture	Image Format
GV-GEBF4802-2F	Fixed	2.8 mm	94°	F/1.6	1/3”
GV-GEBF4802-3F		3.6 mm	78°		

Deep Learning Function

AI Perimeter Protection

(Line Crossing, Region Intrusion)

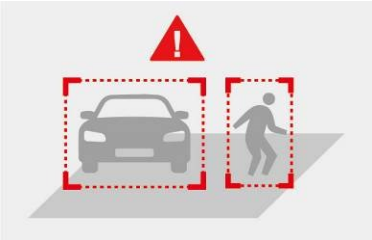

Specifications

Camera					
Image Sensor		1/3" progressive scan CMOS			
Picture Elements		2560 (H) x 1440 (V)			
Minimum Illumination	Color	0.005 Lux (F1.6, AGC ON)			
	IR On	0 Lux			
Shutter Speed		Auto / Manual (1 ~ 1/100000 sec)			
White Balance		Auto / Manual			
Gain Control		Auto / Manual			
S/N Ratio		50 dB			
WDR Pro		Yes			
Dynamic Range		120 dB			
Lens		**GV-GEBF4802-2F**		**GV-GEBF4802-3F**	
Megapixel		4 MP			
Day / Night		Yes (with removable IR-cut filter)			
Lens Type		Fixed			
Focal Length		2.8 mm		3.6 mm	
Maximum Aperture		F/1.6			
Mount		M12			
Image Format		1/3”			
FOV	Horizontal	94°		78°	
	Vertical	50°		40°	
	Diagonal	115°		97°	
Operation	Focus	Fixed			
	Zoom	Fixed			
	Iris	Fixed			
IR LED	Quantity	1 IR LED			
	Max. IR Distance	30 m (100 ft)			
Smart Illumination	Quantity	1 Warm LED			
	Max. Warm LED Light Distance	30 m (100 ft)			
DORI		**Detect**	**Observe**	**Recognize**	**Identify**
Lens	2.8 mm	62 m (203.4 ft)	25 m (82.0 ft)	12 m (39.3 ft)	6 m (19.6 ft)
	3.6 mm	79 m (259.1 ft)	32 m (104.9 ft)	16 m (52.4 ft)	8 m (26.2 ft)
Operation					
Video Compression		H.265, H.265+, H.264, H.264+, MJPEG			
Video Streaming		Triple streams			
Video Resolution	Main Stream	2560 x 1440 (default), 2304 x 1296, 1920 x 1080, 1280 x 720			
	Sub Stream	1280 x 720 (default), 704 x 480, 704 x 576, 640 x 480, 352 x 240, 352 x 288			
	Third Stream	704 x 480 (default), 704 x 576, 480 x 240, 352 x 240, 352 x 288			
Frame Rate		Max. 30 fps (60 Hz) at 2560 x 1440, 2304 x 1296, 1920 x 1080, 1280 x 720, 704 x 480, 640 x 480, 480 x 240, 352 x 240 Max. 25 fps (50 Hz) at 2560 x 1440, 2304 x 1296, 1920 x 1080, 1280 x 720, 704 x 576, 640 x 480, 480 x 240, 352 x 288 * The frame rate and performance may vary depending on the number of connections and data bitrates (different scenes).			
Maximum Throughput		36 Mbps			

Maximum Streams * When the total bitrate is within the maximum throughput		6	
Video Analytics		Motion Detection, Object Abandoned / Missing Detection, Video Exception	
Smart Alarm		Motion Detection, SD Card Error, SD Card Full, IP Address Conflict, Cable Disconnection, Scene Change Detection, Video Blur Detection, Abnormal Color Detection	
Image Setting		Brightness, Contrast, Hue, Saturation, Sharpness, 3D Noise Reduction, BLC, Antiflicker, White Balance, Shutter, Gain, Image Orientation (Flip, Mirror, 0°, 90°, 180°, 270° – including Corridor format)	
Audio Compression		G.711	
Audio Support		One-way audio	
Deep Learning Function			
AI Analytics		Line Crossing, Region Intrusion (Human & Vehicle classification) * The two functions can only be enabled one at a time.	
Network			
Interface		10/100 Ethernet	
Protocol		802.1X authentication (EAP-TLS, EAP-MD5), DDNS, DHCP, FTP, HTTP POST, HTTP, HTTPS, IPv4, IPv6, NTP, ONVIF (Profile G, S, T, M), PPPoE, QoS, RTCP, RTMP, RTP, RTSP, SMTP, SNMP, UDP, UPnP	
Mechanical			
Camera Angle Adjustment	Pan	0 ~ 360°	
	Tilt	0 ~ 75°	
	Rotate	0 ~ 360°	
Connectors	Power	DC jack	
	Ethernet	RJ-45 connector	
	Audio	Built-in microphone	Yes
		External microphone required	Yes (audio jack, 3.5 mm or 0.14 in)
		Built-in speaker	No
		External speaker required	No
		* Choose either the built-in or external microphone.	
		* The Audio In port only supports microphones with a power supply.	
	Local Storage	microSD card slot (SD / SDHC / SDXC), up to 256 GB	
General			
Camera Housing		White, Charcoal (only for GV-GEBF4802-2F)	
Operating Temperature		-30°C ~ 60°C (-22°F ~ 140°F)	
Humidity		0 ~ 95% (no condensation)	
Power Source		DC 12V, 1A / PoE (IEEE 802.3af)	
Max. Power Consumption		6 W	
Dimensions		Ø 94.6 × 82.8 mm (Ø 3.7 × 3.3 in)	
Weight		0.45 kg (0.99 lb)	
Ingress Protection		IP67	
Vandal Resistance		IK10 for metal casing	
Certification		CE, FCC, RoHS, UKCA compliant	
Web Interface			
Installation Management		Web-based configuration	
Maintenance		Firmware upgrade through Web Browser or Utility	
Access from Web Browser		Live View, Playback, Video Recording, Image Quality, Bandwidth Control, Image Snapshot, Digital Zoom, Text Overlay, Image Masking, Intelligent Mark	
Language		Chinese Traditional, Czech, Dutch, English, French, German, Greek, Hebrew, Hungarian, Italian, Japanese, Korean, Norwegian, Polish, Portuguese, Romanian, Russian, Spanish, Spanish (Latin America), Turkish, Ukrainian	
Software Applications			
Software Supported		GV-VMS (V17.4.8 / V18.3.5 or later, patch files required / V20.0.0 or later), GV-Control Center (V4.2.1 or later, patch files required), GV-Edge Recording Manager (V2.3.0 or later), GV-Recording Server (V2.1.1 or later, patch files required), GV-IP Device Utility (V9.0.4 or later)	
Smart Device Access		GV-Eye for iOS and Android (V3.4.1 or later)	
Live Viewing		Web Browser (Chrome, Edge, Firefox, Safari), Mobile App	

Note: All specifications are subject to change without notice.

Packing List

1. GV-GEBF4802 Eyeball Dome
2. Waterproof Rubber Set
3. Screw Kit
4. Drill Template Paster
5. Download Guide

Accessories

Model No.	Name		Details
GV-Mount117 (must be used with GV-Mount506-1)	Pendant Mount		Dimensions: Ø 121 x 191.4 mm (Ø 4.76 x 7.54 in) Weight: 0.4 kg (0.88 lb)
GV-Mount211-4	Wall Mount Bracket		Dimensions: 129.5 x 155 x 74.5 mm (5.10 x 6.10 x 2.93 in) Weight: 0.53 kg (1.16 lb)
GV-Mount211-4B	Wall Mount Bracket – Charcoal		Dimensions: 129.5 x 155 x 74.5 mm (5.10 x 6.10 x 2.93 in) Weight: 0.53 kg (1.16 lb)
GV-Mount211-8 (must be used with GV-Mount506-1)	Wall Mount Bracket		Dimensions: 188.4 x 121 x 137.3 mm (7.41 x 4.76 x 5.4 in) Weight: 0.52 kg (1.15 lb)
GV-Mount314 (must be used with GV-Mount211-8 + GV-Mount506-1, or GV-Mount506-1)	Corner Mount Bracket		Dimensions: 215 x 121.4 x 215 mm (8.46 x 4.78 x 8.46 in) Weight: 2.05 kg (4.52 lb)
GV-Mount470 (must be used with GV-Mount211-8 + GV-Mount506-1, or GV-Mount506-1)	Pole Mount Bracket		Dimensions: 163.3 x 54.5 x 215 mm (6.43 x 2.15 x 8.46 in) Weight: 1.10 kg (2.43 lb)
GV-Mount506-1	Junction Box		Dimensions: 117.9 x 143.3 x 47 mm (4.64 x 5.64 x 1.85 in) Weight: 0.38 kg (0.84 lb)
GV-Mount506-1B	Junction Box – Charcoal		Dimensions: 117.9 x 143.3 x 47 mm (4.64 x 5.64 x 1.85 in) Weight: 0.38 kg (0.84 lb)
GV-Mount507	Junction Box	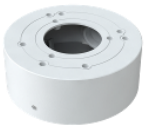	Dimensions: Ø 96 x 38.8 mm (Ø 3.78 x 1.53 in) Weight: 0.135 kg (0.30 lb)

GV-Mount707 (must be used with GV-Mount117)	Extension Tube		Dimensions: Ø 37 x 515 mm (Ø 1.46 x 20.28 in) Weight: 0.8 kg (1.76 lb)
GV-Mount927 (for standard US single and double gang boxes only)	Power Box Mount Bracket		Dimensions: Ø 145 x 11.2 mm (Ø 5.71 x 0.44 in) Weight: 0.2 kg (0.44 lb)
GV-PA191	PoE Adapter		GV-PA191 is a Power over Ethernet (PoE) adapter designed to provide power to the IP device through a single Ethernet cable.
GV-PA301	Gigabit PoE Adapter		GV-PA301 is a Gigabit Power over Ethernet (PoE) adapter.
GV-POE Switch		GV-POE Switch is designed to provide power along with network connection for IP devices. The GV-POE Switch is available in various models with different numbers and types of ports.	
Power Adapter		Contact our sales representatives for the countries and areas supported.	

Dimensions

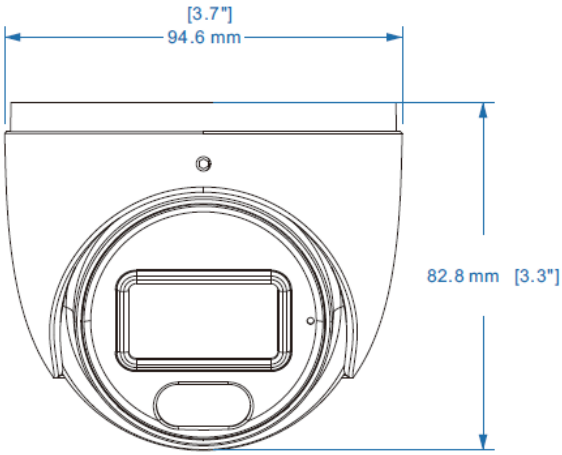

Mounting Type

Wall Bracket Mount	Junction Box Mount	Junction Box Mount	Pole Bracket Mount
GV-Mount211-4 GV-Mount211-4B	GV-Mount506-1 GV-Mount506-1B	GV-Mount506-1	GV-Mount470
		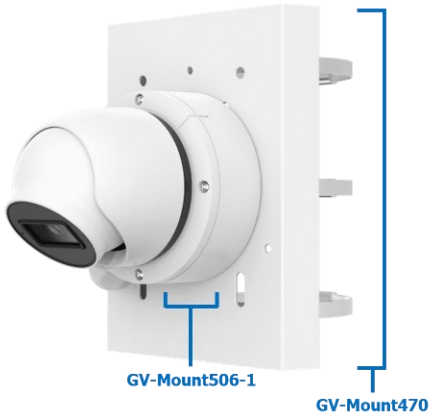	

Junction Box Mount	Junction Box Mount	Wall Bracket Mount
GV-Mount507	GV-Mount506-1	GV-Mount211-8

Junction Box Mount	Wall Bracket Mount	Pole Bracket Mount
GV-Mount506-1	GV-Mount211-8	GV-Mount470

Junction Box Mount	Corner Bracket Mount
GV-Mount506-1	GV-Mount314

Junction Box Mount	Wall Bracket Mount	Corner Bracket Mount
GV-Mount506-1	GV-Mount211-8	GV-Mount314

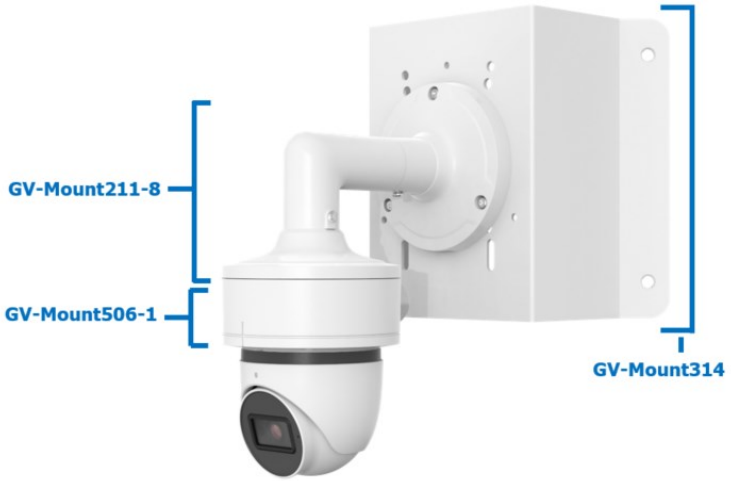
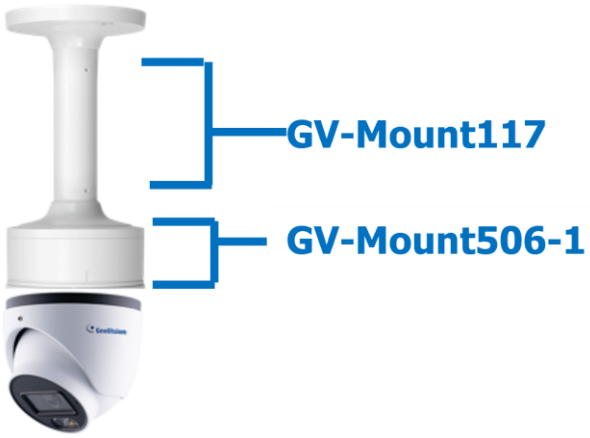
Junction Box Mount	Pendant Mount
GV-Mount506-1	GV-Mount117