Hardware included

A

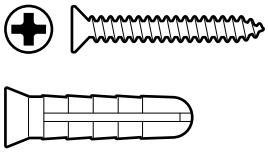

B



C

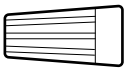

D

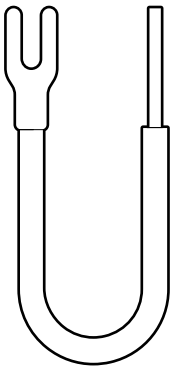

Tools included

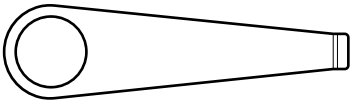

Removal tool

Tools needed

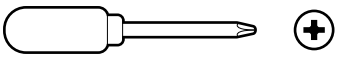

Phillips-head screwdriver

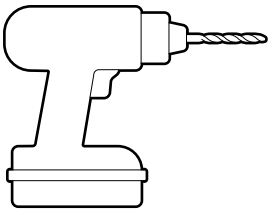

Drill with a 1/4 in (6 mm) masonry bit (optional)

1.

Remove the protective wrap.



2.

Insert the removal tool into the slot at the bottom of your doorbell to remove the faceplate.

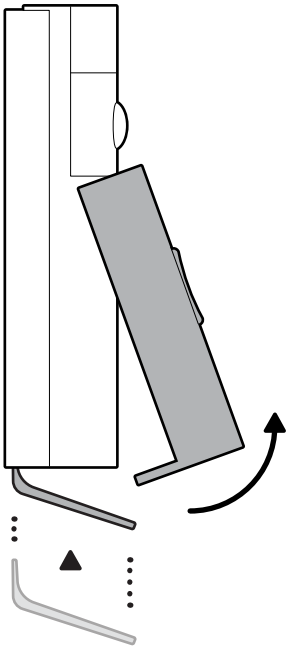

3.

Remove the battery.

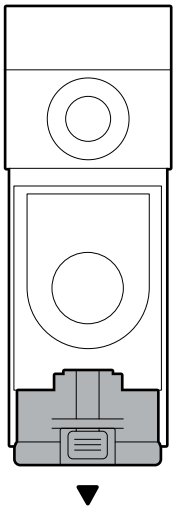

4.

Discard the battery packaging and insulator.

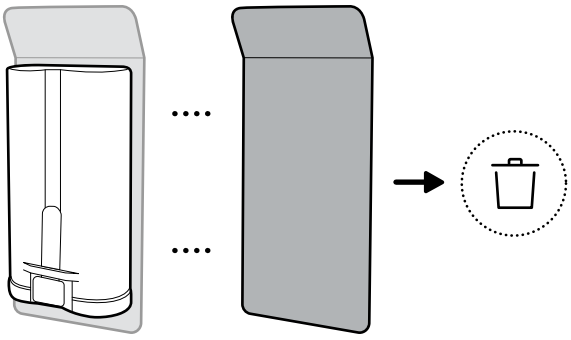

5.

Fully charge the battery.

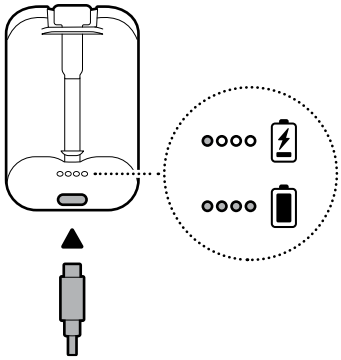

6.

Download the Ring app.

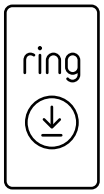

7.

Scan the QR code on your device.

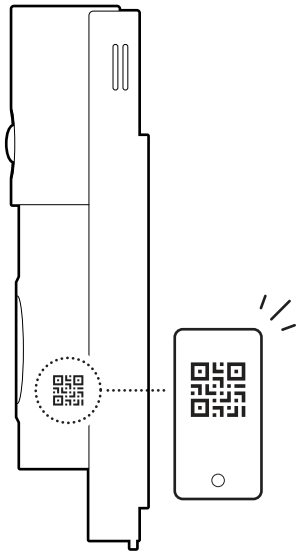

Installation without an existing chime

1.

Choose a location for your doorbell.

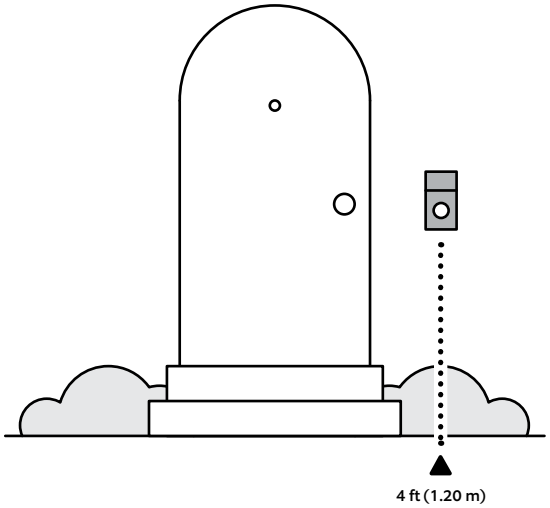

2.

Use the mounting bracket as a guide to mark screw holes on the wall.

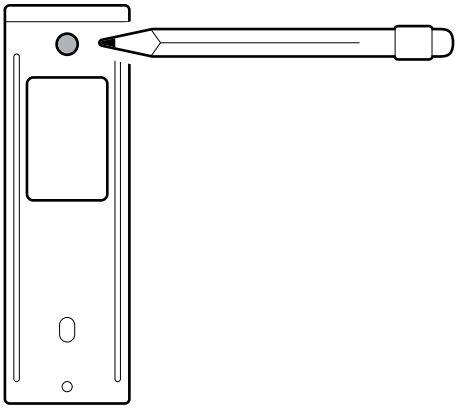

3.

(Optional) If using a corner mount, install the mount on the mounting surface using the bottom holes in the top and bottom sections, ensuring it is facing in your desired viewing direction.

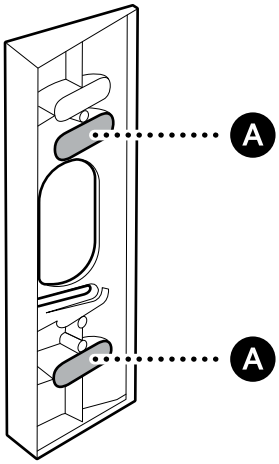

On stucco, brick, or concrete, use a 6 mm (1/4 in) masonry bit to drill holes for the included wall anchors.

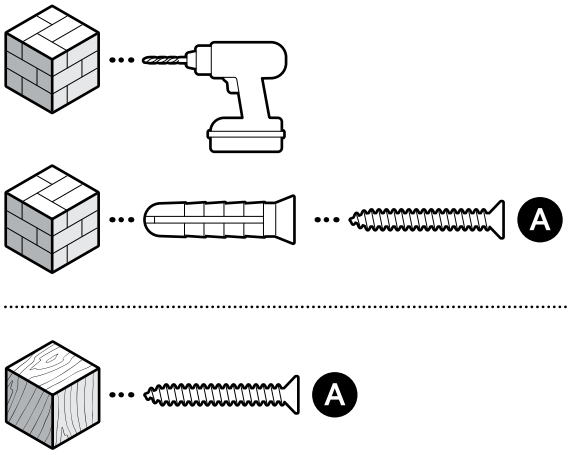

(Optional) If using a wedge mount, install the mount on the mounting surface using the screws included with your wedge kit, ensuring it is facing down.

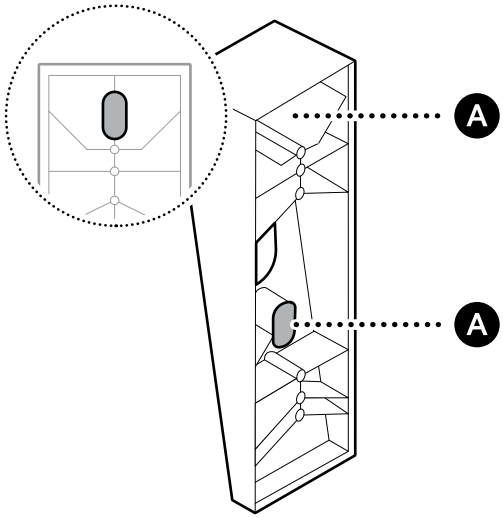

On stucco, brick, or concrete, use a 6 mm (1/4 in) masonry bit to drill holes for the included wall anchors.

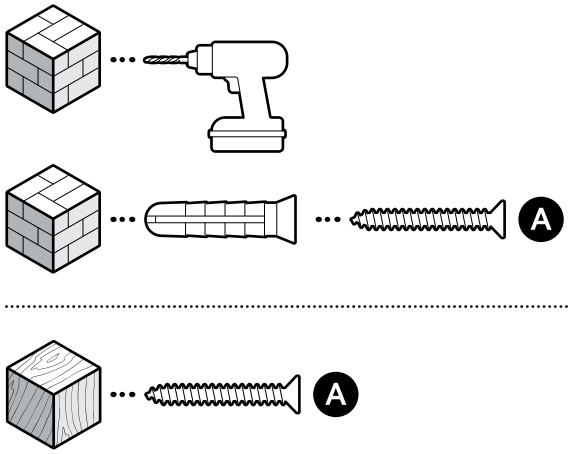

4.

(Optional) If installing multiple wedge or corner mounts, insert screws through both mounts to hold them together.

NOTE: We do not recommend more than two.

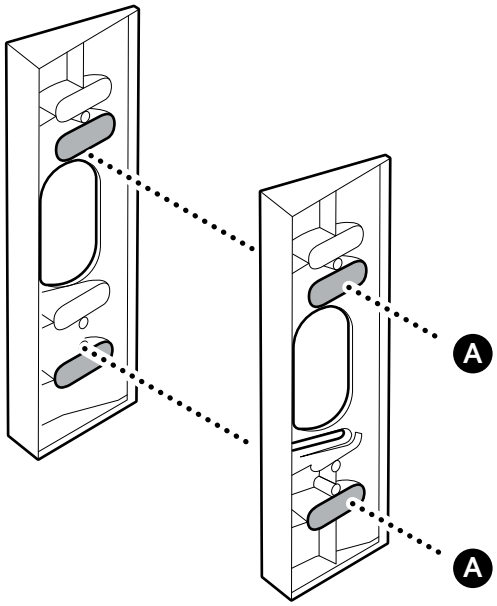

5.

Install the mounting bracket on your mount or directly on the mounting surface with the included screws.

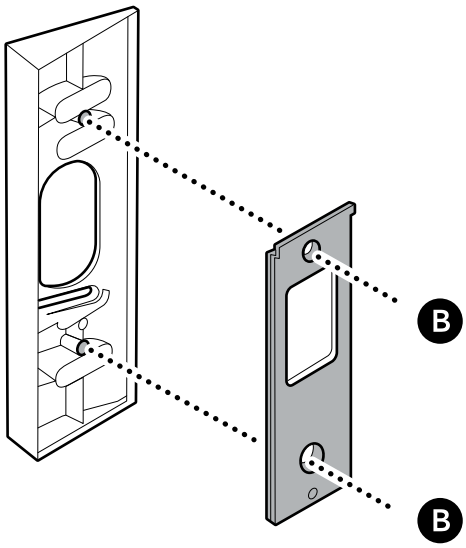

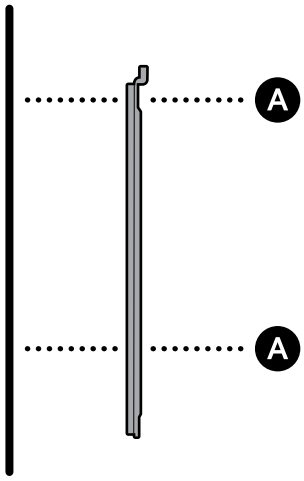

On stucco, brick, or concrete, use a 6 mm (1/4 in) masonry bit to drill holes for the included wall anchors.

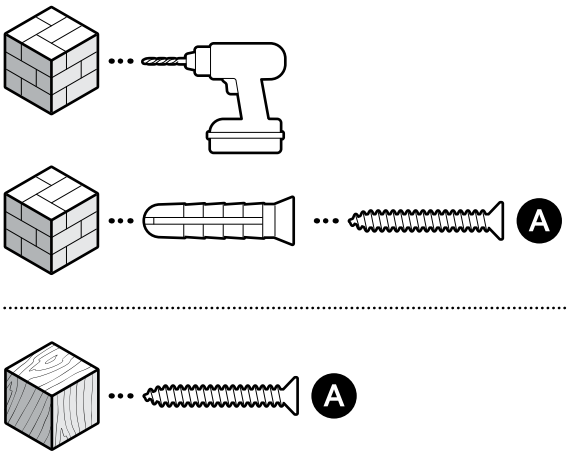

6.

Mount your doorbell by hooking it over the bracket.

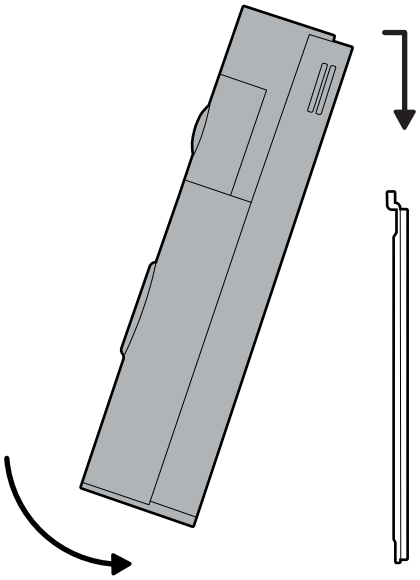

7.

Remove the battery to identify the security screw.

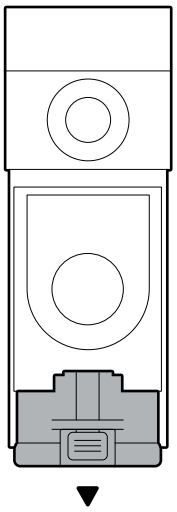

8.

Tighten the security screw.

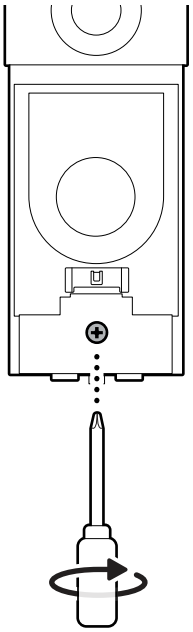

9.

Reinsert the battery.

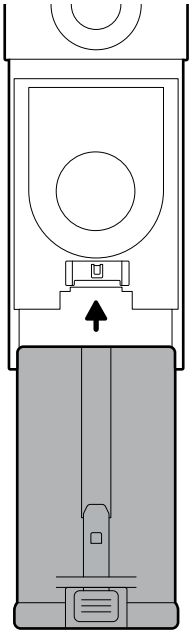

10.

Reattach the faceplate by pressing until you hear a click.

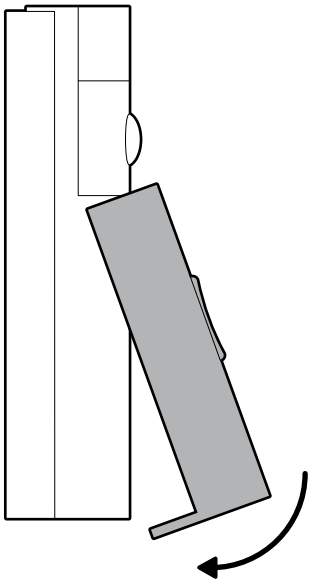

Installation with an existing chime

1.

Shut off power at the breaker.

NOTE: If you are unsure which breaker to flip, turn off the master breaker or contact a licensed electrician.

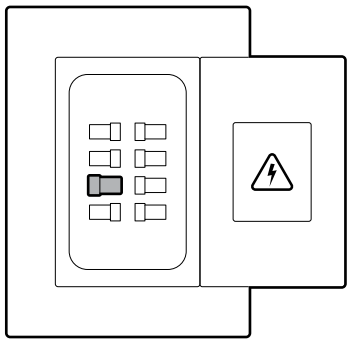

CAUTION!
You'll be working with electrical wires during the install process. If you are uncomfortable or inexperienced, consult with a licensed electrician.

WARNING!
If your home has multiple chimes, you will need to ensure any additional chimes are bypassed by connecting the wires connected to Front and Trans together with a wire nut.

2.

Locate your existing doorbell and remove, if necessary.

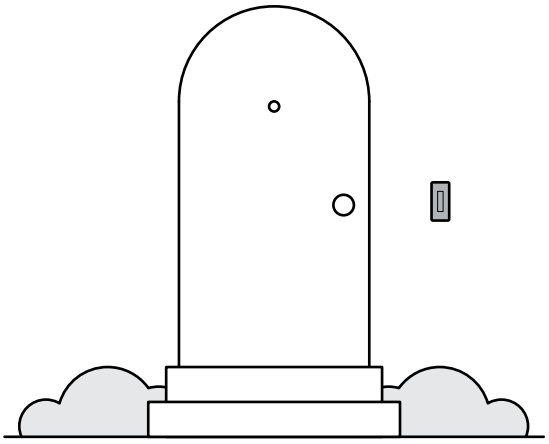

3.

(Optional) If using a corner mount, install the mount over your doorbell wires using the bottom holes in the top and bottom sections, ensuring it is facing in your desired viewing direction.

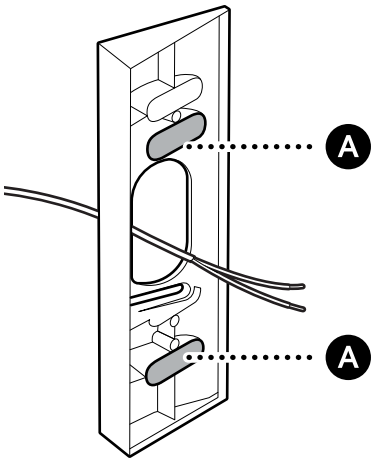

On stucco, brick, or concrete, use a 6 mm (1/4 in) masonry bit to drill holes for the included wall anchors.

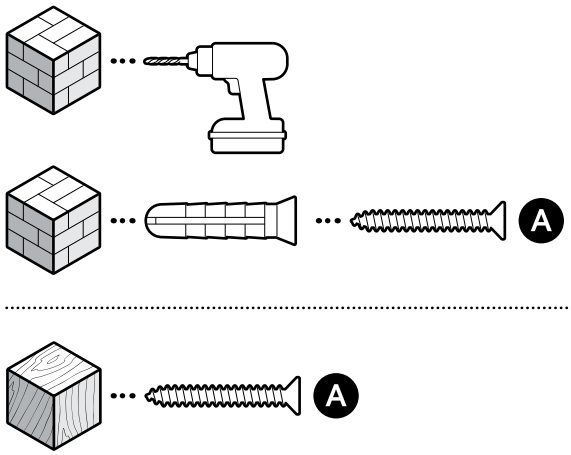

(Optional) If using a wedge mount, install the mount over your doorbell wires using the screws included with your wedge kit, ensuring it is facing down.

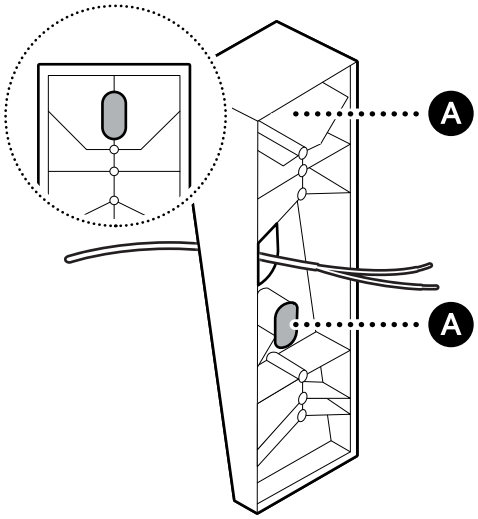

On stucco, brick, or concrete, use a 6 mm (1/4 in) masonry bit to drill holes for the included wall anchors.

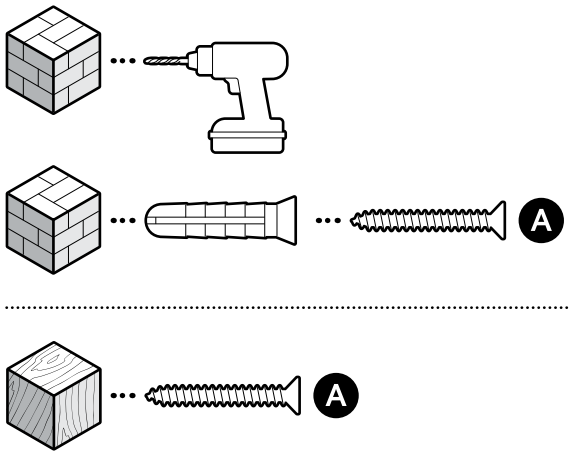

4.

(Optional) If installing multiple wedge or corner mounts, insert screws through both mounts to hold them together.

NOTE: We do not recommend more than two.

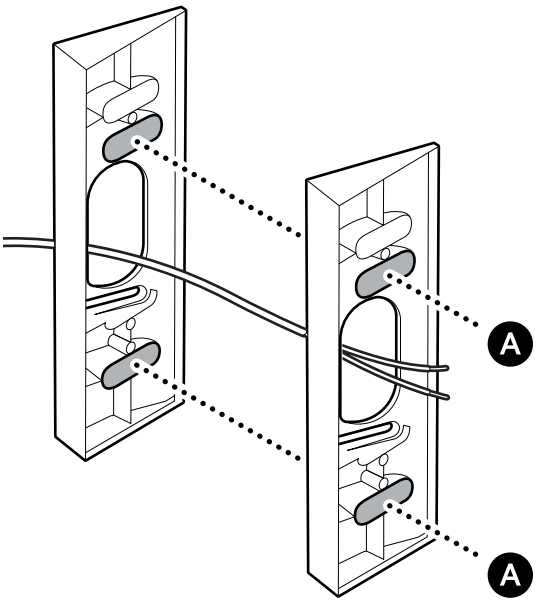

On stucco, brick, or concrete, use a 6 mm (1/4 in) masonry bit to drill holes for the included wall anchors.

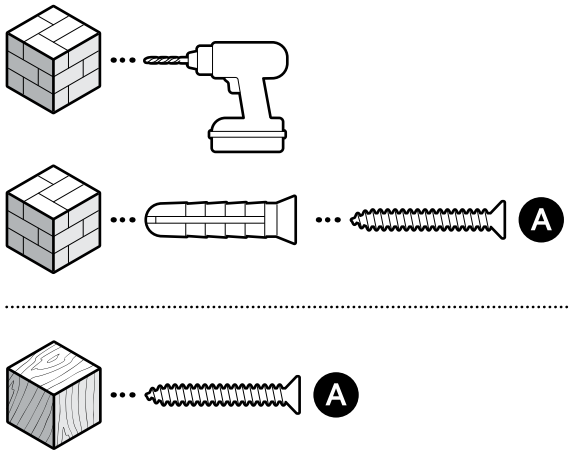

5.

Install the mounting bracket on your mount or directly over the doorbell wiring with the included screws.

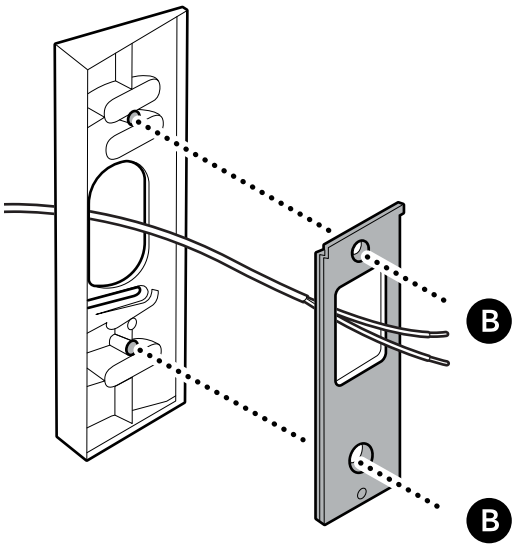

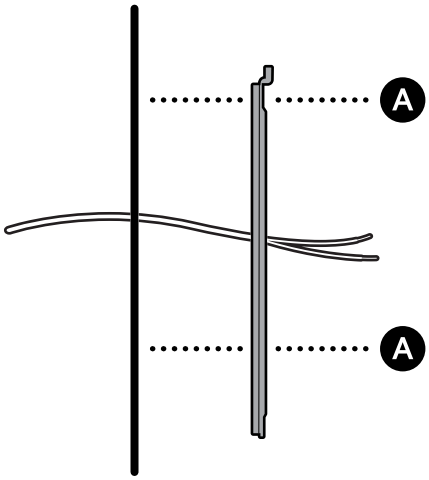

6.

(Optional) Attach the included fork connector extenders to the doorbell wiring with wire nuts.

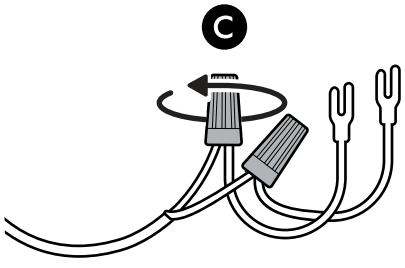

7.

Connect the doorbell wiring or fork connector extenders to your doorbell's wire terminals.

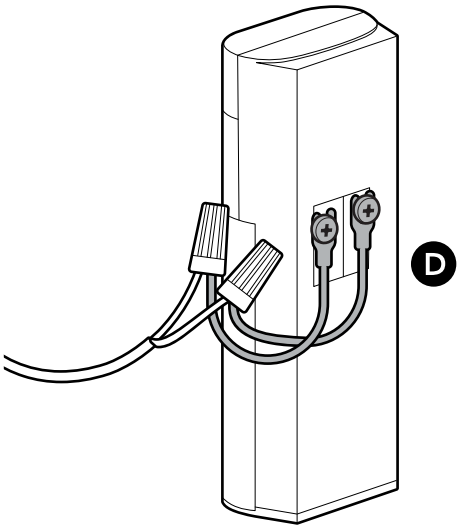

8.

Mount your doorbell by hooking it over the bracket.

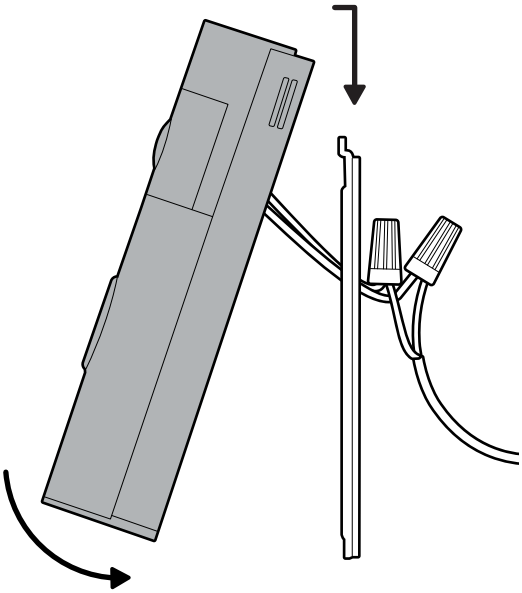

9.

Remove the battery to identify the security screw.

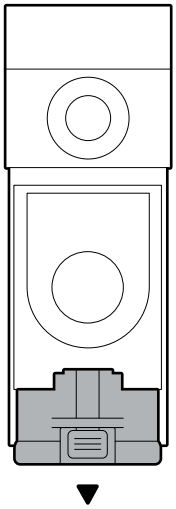

10.

Tighten the security screw.

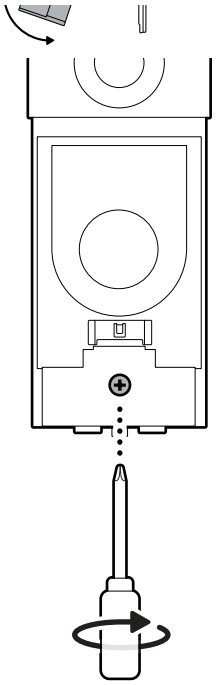

11.

Reinsert the battery.

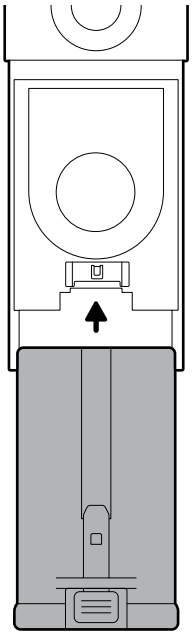

12.

Reattach the faceplate by pressing until you hear a click.

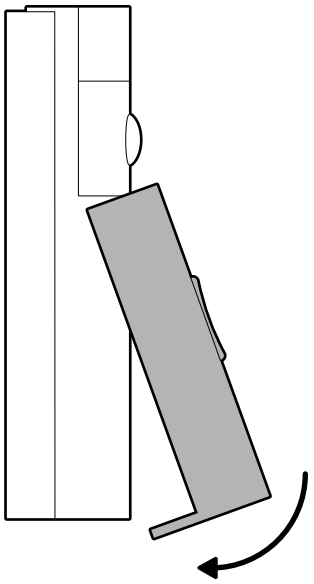

13.

Restore power at the breaker.

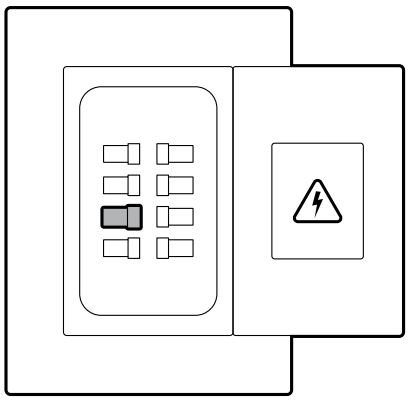

ring.com/contact

ring.com/help

Ring LLC 12515 Cerise Ave, Hawthorne, CA, 90250 USA

Ring LLC / **Amazon EU S.à.r.l.**, 38 Avenue John F. Kennedy, L-1855 Luxembourg / Amazon UK, 1 Principal Place, Worship Street, London, EC2A 2FA, United Kingdom

アマゾンジャパン合同会社〒153-0064 東京都目黒区下目黒1-8-1

Ring LLC مبني 12515 طريق سيريس، هاوثورن، كاليفورنيا، 90250، الولايات المتحدة الأمريكية

©2026 Ring LLC or its affiliates. Ring and all related marks are trademarks of Ring LLC or its affiliates.

©2026 Ring LLC又はその関連会社。Ring及びこれらに関するすべての商標は、Ring LLC又はその関連会社の商標です。