2W

2-WIRE SYSTEMS

VIDEO ENTRY SYSTEMS

ENGLISH

DIAGRAMS



Comelit®

Passion. Technology. Design.

Deep roots, global vision.

Founded in 1956, Comelit Group SpA is an industrial company operating on a worldwide scale and specialising in the design and manufacture of video entry, video surveillance, anti-intrusion, home automation, access control and fire protection systems. The company has a strong international vocation thanks to its close ties with the area in which it was created and in which its headquarters are still located today (Val Seriana, to be precise).

An international group.

Comelit exports to over 70 countries worldwide and, in addition to its Italian headquarters, has 15 branches located in strategic areas in which the company operates: from Europe to the Far East, the United States and the Middle East. This articulated sales structure integrates shared know-how with the awareness of specific requirements in each market.

Constant innovation, friendly technology.

Comelit makes constantly looking to the future its mission. Innovation through continuous investment in manpower and technology finds an outlet in the design of new solutions dedicated to improving the quality of everyday life by maximising simplicity and functionality.

Design: style, passion, art.

Besides placing technology at the service of mankind, Comelit is also a byword for design. Its unique and original style combines the most hi-tech materials with simple lines, clean shapes and cutting-edge colours. Every Comelit product therefore conveys a new concept for living in a space, in harmony with modern architectural trends.

Quality in every detail.

Comelit has been creating high quality video entry solutions for over 60 years. During the development process, every little detail is given all the attention needed to create a product which represents the best possible expression of our philosophy. Comelit subjects its products to strict laboratory testing, in terms of their resistance to heat, water, pressure and stress. This ensures that each product can withstand being pressed more than 125,000 times over the course of its lifetime.



GENERAL CONTENTS

LIST OF DEVICES 6

LIST OF VIDEOTUTORIALS 11

Warning 12

Introduction 13

Systems presentation 14

Video door entry functions 26

Video Kit system 38

System performance 39

Wiring diagrams 43

Building Kit audio/video system 56

System performance 57

Wiring diagrams 62

SBTOP audio/video system 80

System performance 81

Wiring diagrams 86

Audio Kit system 122

System performance 123

Wiring diagrams 125

SB2 Audio System 136

System performance 137

Wiring diagrams 139

SB1 Audio System 142

System performance 143

Wiring diagrams 145

Audio/video modules .....

Audio/video module for 2-wire system Art. 4681 / 1621VC 148

Audio module for 2-wire system Art. 1621 166

Audio/video module for SBTOP system Art. 4680C, 1622VC, 1622VCF 182

Audio module for SB1 system Art. 1622 198

Internal unit .....

Mini Hands-free door entry monitor Art. 6741W - Art. 6741W/BM 210

Mini Handsfree monitor Art. 6721W - Art. 6721W/BM 236

Hands-free Mini accessories 250

Mini door entry monitor with handset Art. 6701 / 6700 258

Mini handset accessories 276

Icona door entry monitor Art. 6601W - Art. 6601W/BM 288

Icona SBC accessories 306

Maxi door entry monitor Art. 6801W 312
Maxi SBC accessories *330*
Door-entry phone Art. 2738W 334
Door-entry phone Art. 2708W 340
Handsfree door entry phone Mini 6750W, Mini 6751W 346

External units .....
Ikall and Ikall Metal modular entrance panel 362
Digital electronic key module Art. 3348B / 3348BM 372
Digital call module Art. 3360B/3360BM 380
Vandalcom modular entrance panel 432
Digital call module Art. 3070S 438
Digital directory module Art. 3072S 460
Electronic key module Art. 3188SB 478
Switch series entrance panel 488
Audio/video entrance panel Art. Art. 3451S Audio entrance panel Art. Art. 3451AS 496
316 Accessories 532
Roma series entrance panel 542
Ciao Series Entrance panel Art. CA2100P-CA2200P 548
Quadra audio/video entrance panel Art. 4893M 560
Quadra accessories 572
Art. 3061M master button - Art. 3061S slave button 576

System power supply units .....
Power supply unit Art. 1209 580
Power supply unit Art. 1210 584
SBTOP system mixer-power supply Art. 4888C 588

System accessories .....
Porter switchboard Art. 1998A 594
Porter switchboard Art. 1998VC 612
Power supply unit Art. 1595 638
Transformer Art. 1212/B 640
Transformer Art. 1195 642
Transformer Art. 1200 644
Digital switching module for 2-wire system Art. 1404 646
Digital switching module Art. 1424 658
Switching device Art. 1224A 666
Additional ringtone Art. 1229A 670
Additional ringer Art. 1229 674
Digital actuator relay accessory Art. 1256 678
Remote camera module for 2-wire system Art. 1409 684
Module for SBTOP remote camera module Art. 1259C 690
Video distributor with 4-outputs (SBC) Art. 4840 696
1IN-4OUT Distribution terminal art. 1412 700
SBTOP riser branch module Art.1414 704
SBTOP distributor module with integrated protection line Art. 1415 708
Line amplifier module Art. 4833C 712
Concentrator module Art. 4834/9 716
Accessories Art. 1250M and Art. 1250XV, Art. 1250XA 720
Software for printing nameplate labels Art. 1235A 724

Addressing table **734**

Key to symbols **736**

LIST OF DEVICES

Audio/video modules

	VIDEO KIT	BUILDING KIT	SB TOP	AUDIO KIT	SB2	SB1
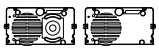 Audio/video module for 2-wire system Art. 4681 / 1621VC		•				
 Audio module for 2-wire system Art. 1621					•	
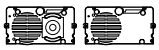 Audio/video module for SBTOP system Art. 4680C, 1622VC, 1622VCF			•			
 Audio module for SB1 system Art. 1622						•

Internal units

	VIDEO KIT	BUILDING KIT	SB TOP	AUDIO KIT	SB2	SB1
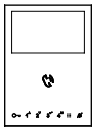 Mini Hands-free door entry monitor - Wi-Fi Art. 6741W(/BM)	•	•	•			
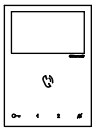 Mini hands-free monitor Art. 6721W(/BM)	•	•	•			
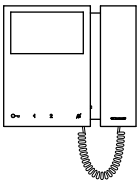 Mini door entry monitor with handset Art. 6700W / 6701W(/BM) / 6701B(/BM)	•	•	•			
 Icona door entry monitor Art. 6601W(/BM)	•	•	•			
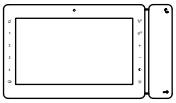 Maxi door entry monitor Art. 6801W(/BM)	•	•	•			
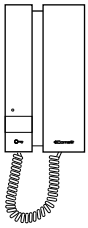 Door-entry phone Art. 2738W	•	•	•	•	•	
Door-entry phone Art. 2708W						•
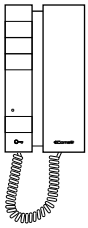 Door-entry phone Art. 2719W	•	•	•	•	•	•

Internal units

	VIDEO KIT	BUILDING KIT	SB TOP	AUDIO KIT	SB2	SB1
 Handsfree door entry phone Mini Art. 6750W	•	•	•			
Handsfree door entry phone Mini Art. 6751W				•	•	

External units

	VIDEO KIT	BUILDING KIT	SB TOP	AUDIO KIT	SB2	SB1
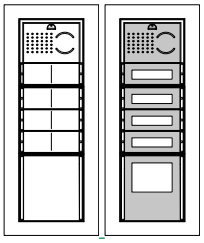 Ikall and Ikall Metal modular entrance panel		•	•		•	•
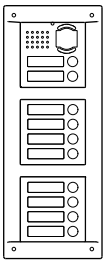 Vandalcom modular entrance panel		•	•		•	•
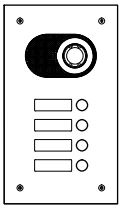 Switch series entrance panel		•	•		•	•
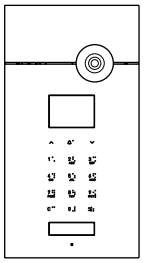 Audio/video entrance panel Art. 3451S Audio entrance panel Art. 3451AS			•			•
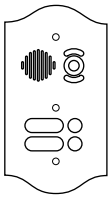 Audio / Audio-Video Roma External unit		•	•		•	•

External units

	VIDEO KIT	BUILDING KIT	SB TOP	AUDIO KIT	SB2	SB1
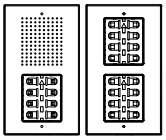 Ciao Series Entrance panel Art. CA2100P-CA2200P				•	•	
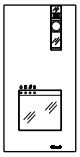 Quadra audio/video entrance panel Art. 4893M	•					
 Art. 3061M master button Art. 3061S slave button		•	•		•	•

System power supply units

	VIDEO KIT	BUILDING KIT	SB TOP	AUDIO KIT	SB2	SB1
 Power supply unit Art. 1209	•			•		
 Power supply unit Art. 1210		•			•	
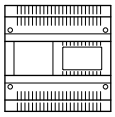 SBTOP system mixer-power supply Art. 4888C			•			

System accessories

	VIDEO KIT	BUILDING KIT	SB TOP	AUDIO KIT	SB2	SB1
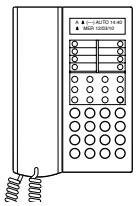 Audio porter switchboard Art. 1998A			•			•
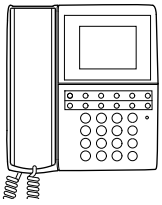 Audio/video porter switchboard Art. 1998VC			•			
 Power supply unit Art. 1595	•	•	•		•	•
 Power supply unit Art. 1212/B	•	•	•			

System accessories

	VIDEO KIT	BUILDING KIT	SB TOP	AUDIO KIT	SB2	SB1
 Transformer Art. 1195	•	•	•		•	•
 Transformer Art. 1200	•	•	•		•	•
 Digital switching module for 2-wire system Art. 1404		•		•	•	
 Video Kit Art. 1405 switching device	•					
 Digital switching module Art. 1424			•			•
 Switching device Art. 1224A			•			•
 Additional ringer Art.1229A	•	•	•	•	•	
 Additional ringer Art.1229	•	•	•		•	•
 Digital actuator relay accessory Art. 1256	•	•	•	•	•	•
 Module for remote camera Art. 1409	•	•	•	•		
 Module for remote camera Art. 1259C			•			
 Video distributor with 4-outputs Art. 4840	•	•				
 1IN-4OUT Distribution terminal Art. 1412	•	•	•			
 SBTOP riser branch module Art.1414		•	•			
 SBTOP distributor module with integrated protection line Art.1415			•			
 Line amplifier module Art. 4833C			•			
 Concentrator module Art. 4834/9			•			

System accessories

		VIDEO KIT	BUILDING KIT	SB TOP	AUDIO KIT	SB2	SB1
	Accessories Art. 1250M and Art. 1250XV, Art. 1250XA	•	•			•	•

LIST OF VIDEOTUTORIALS

Videotutorial

Mini Handsfree Wi-Fi installation

Installation guide of Mini Handsfree Wi-Fi (art. 6741W). The only door entry monitor which can be installed on the old 2-wire system without any additional masonry work.

In this video we will let you see how:

- installing the Mini Handsfree Wi-Fi door entry monitor
- installing and registering the Comelit App
- connecting the door entry monitor to the Wi-Fi network (by WPS, app or directly from the monitor)

(Before starting, read the warnings, the handbook and turn off electricity)

Installation and programming of 2-wire Quarda kit

Installation of additional internal monitor(6721W) in 2-wire Quadra kit

Installation and programming of actuator relay 1256 in the 2-wire Quadra kit

Installation of an additional external unit (4893) in the 2-wire Quadra kit

The door entry color monitor kit comprised with a Quadra entrance panel and with a Mini Handsfree (8461V) door entry monitor.

The Quadra kit can be expanded up to 16 entry monitors and 4 entrance panels.

Theese tutorials are compatible with all the Quadra kits (8461V - 8461M - 8461I - 8461X)

Installation and programming of the intercom function

Installation and programming guidelines for intercom function in a door entry system.
The tutorial is compatible with all the Quadra kits (8461V - 8461M - 8461I - 8461X) and with all 2-wire Simplebus Top systems.

Warning

Intended use

This Comelit product was designed for use in the creation of audio and video communication systems in residential, commercial or industrial settings and in public buildings or buildings used by the public.

Installation

All activities connected to the installation of Comelit products must be carried out by qualified technical personnel, with careful observation of the indications provided in the Manuals / Instruction sheets supplied with those products.

Wires

Cut off the power supply before carrying out any maintenance procedures.

Use wires with a cross-section suited to the distances involved, observing the instructions provided in the system manual.

We advise against running the system wires through the same duct as the power cables (230V or higher).

Safe usage

To ensure Comelit products are used safely:

- carefully observe the indications provided in the Manuals / Instruction sheets
- make sure the system created using Comelit products has not been tampered with / damaged.

Maintenance

Comelit products do not require maintenance aside from routine cleaning, which should be carried out in accordance with the indications provided in the Manuals / Instruction sheets.

Any repair work must be carried out

- for the products themselves, exclusively by **Comelit Group S.p.A.**,
- for systems, by qualified technical personnel.

Disclaimer

Comelit Group S.p.A. does not assume any responsibility for

- any usage other than the intended use
- non-observance of the indications and warnings contained in this Manual / Instruction sheet.

Comelit Group S.p.A. nonetheless reserves the right to change the information provided in this Manual / Instruction sheet at any time and without prior notice.

Introduction

This guide contains all necessary information to create audio and video entry phone systems based on digital 2-wire technology. In particular, it describes all the different types of system that can be created: Video kit, Building Kit audio/video system, SBTOP audio/video system, Audio kit, SB1 audio system, SB2 audio system; it presents the range of articles compatible with digital 2-wire technology and provides the necessary instructions to choose and install the correct products.

The section "System presentation" provides useful information about the differences between the various types of system that can be created, to help you choose the solution that best meets your installation requirements, while the section "Video entry phone functions" lists the main functions available using digital 2-wire BUS technology.

The systems described in this guide meet diverse installation requirements and are all based on a non-polarised 2-wire BUS system.

The main advantages of the digital 2-wire system are:

- ***Versatility**.The digital 2-wire system can be used in both single-family installations and in medium/large residential complexes.*
- ***Installation is easy, quick and foolproof.** Just 2 non-polarised wires are required for connection.*
- ***Flexibility**. Functions with all types of cable. Therefore ideal for refurbishment projects.*
- ***Quick and simple programming** using the dip-switches on system devices.*

Systems presentation

Video kit system

The Video Kit is the ideal solution for video entry phone systems for 1 to 4 dwellings.

The kit can be expanded with more monitors in each dwelling and with additional audio/video entrances or accessories, such as the remote camera module and/or an actuator relay to control stair lights or an additional lock.

A range of kits is available, comprised of the Quadra entrance panel and the new Maxi, Icona, Mini, Mini Handsfree and Mini hands-free Wi-Fi monitors.

***BASIC** LAYOUTS*

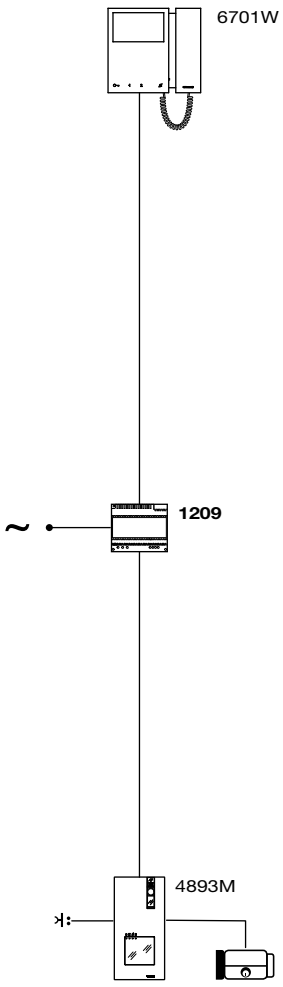

***ADDITIONAL FUNCTIONS** LAYOUT*

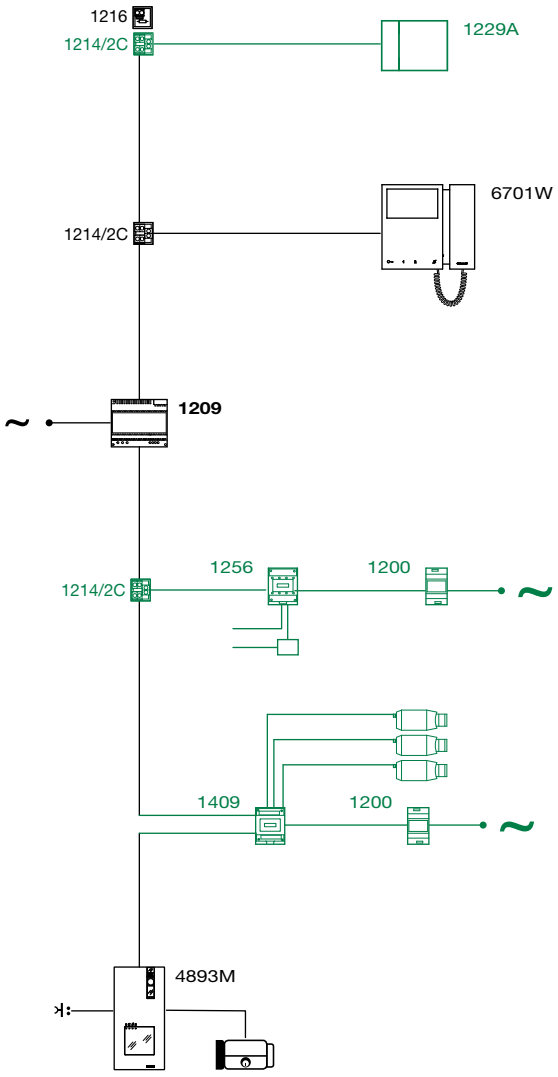

SYSTEM ***EXPANDABILITY LAYOUT***

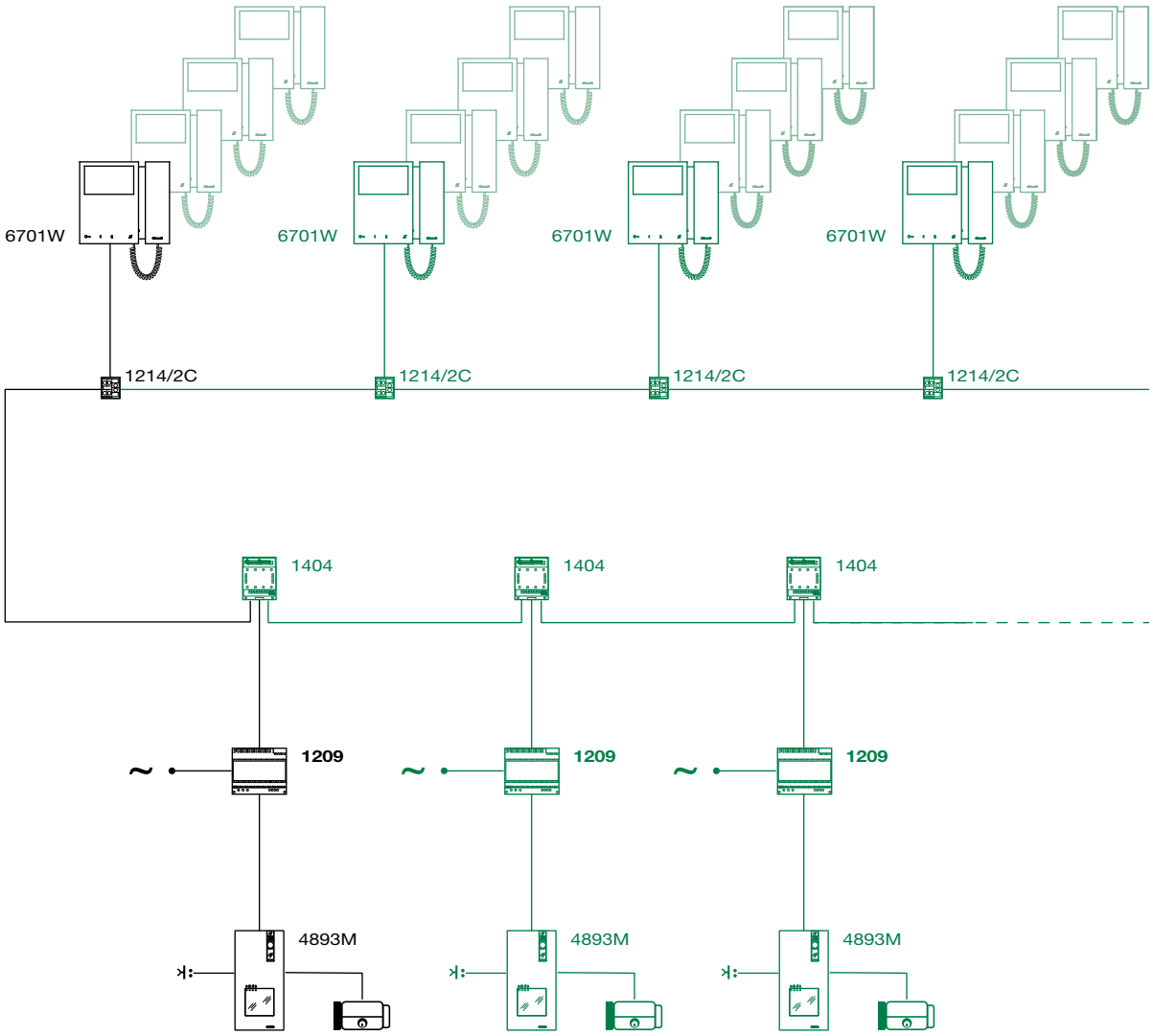

Building Kit audio/video system

The Building Kit digital 2-wire system is the ideal solution for video entry phone systems in small residential complexes with up to 100 dwellings.

Each apartment can have a maximum of 4 monitors. The system can be expanded with the addition of remote cameras, actuators, audio/video entrances with analog entrance panels or digital entrance panels with electronic directories.

***BASIC** LAYOUTS*

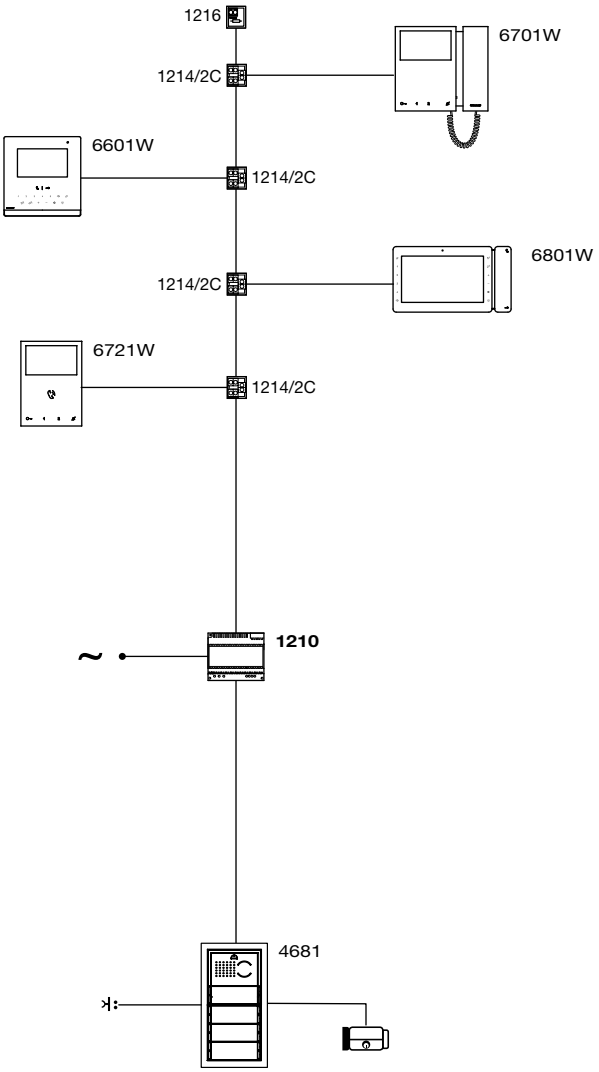

***ADDITIONAL FUNCTIONS** LAYOUT*

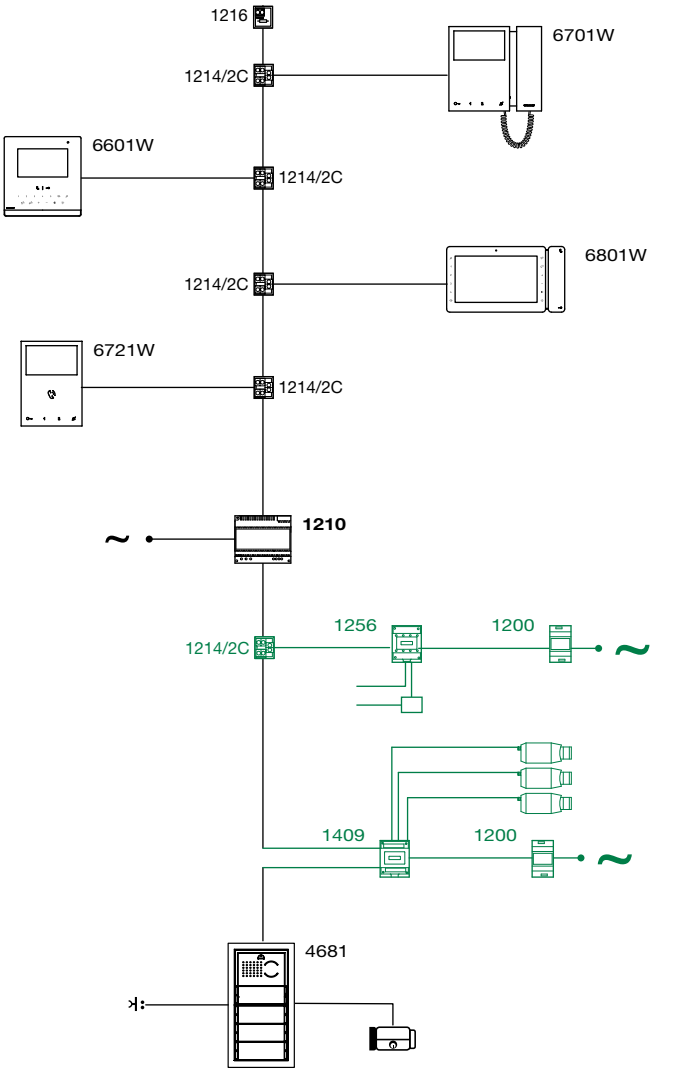

*SYSTEM EXPANDABILITY LAYOUT - **WITH N ENTRANCES***

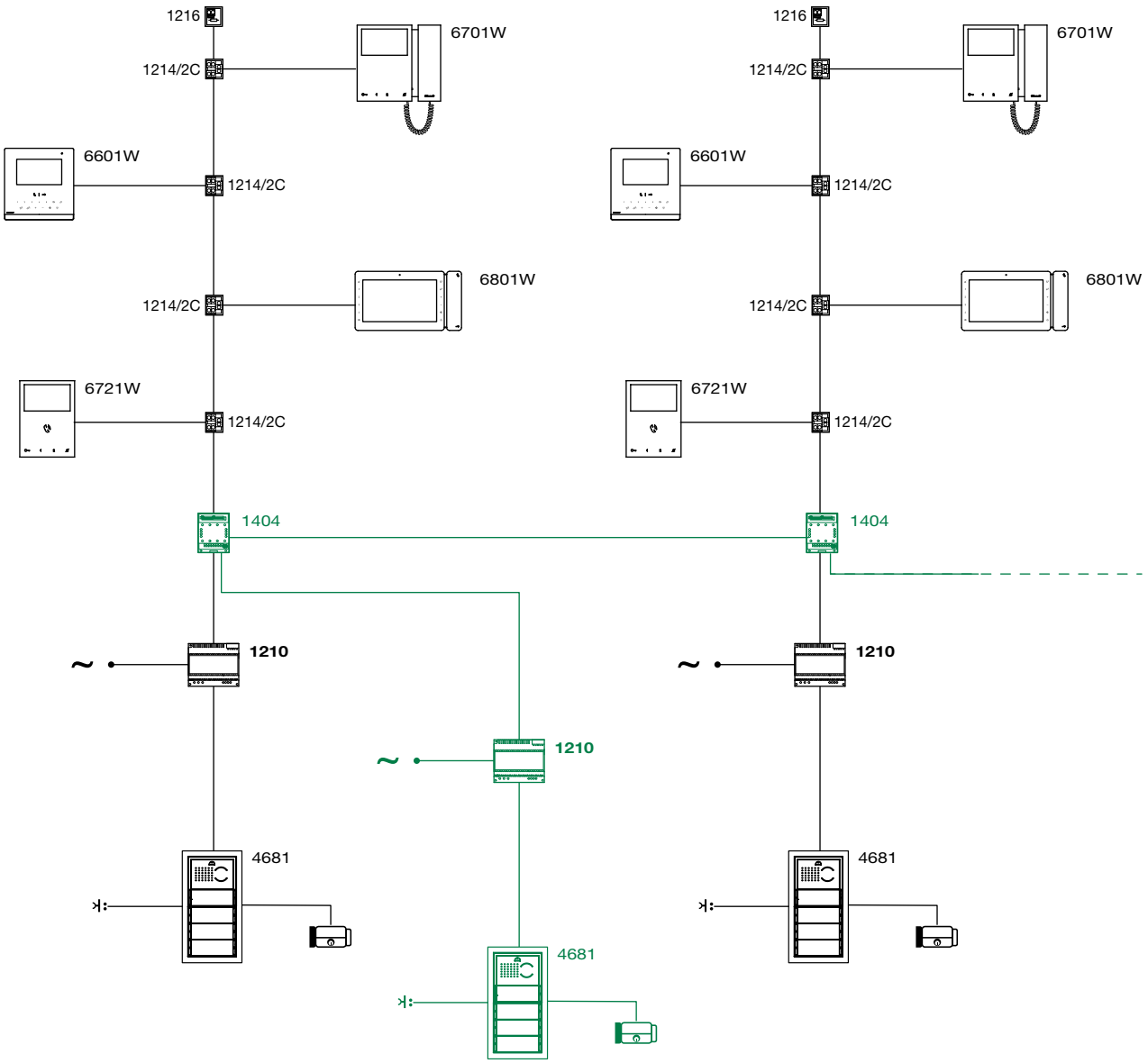

Simplebus TOP audio/video system

The SB TOP digital 2-wire system is the ideal solution for video entry phone systems in medium/large residential complexes with up to 240 users or, in the case of TOP applications, up to 120,000 users.

The external unit is powered separately from a dedicated power supply unit.

Each apartment can have a maximum of 4 monitors. The system can be expanded with the addition of a porter switchboard, actuators and further audio/video entrances, with either analog entrance panels or digital entrance panels with electronic directories.

***BASIC** LAYOUTS*

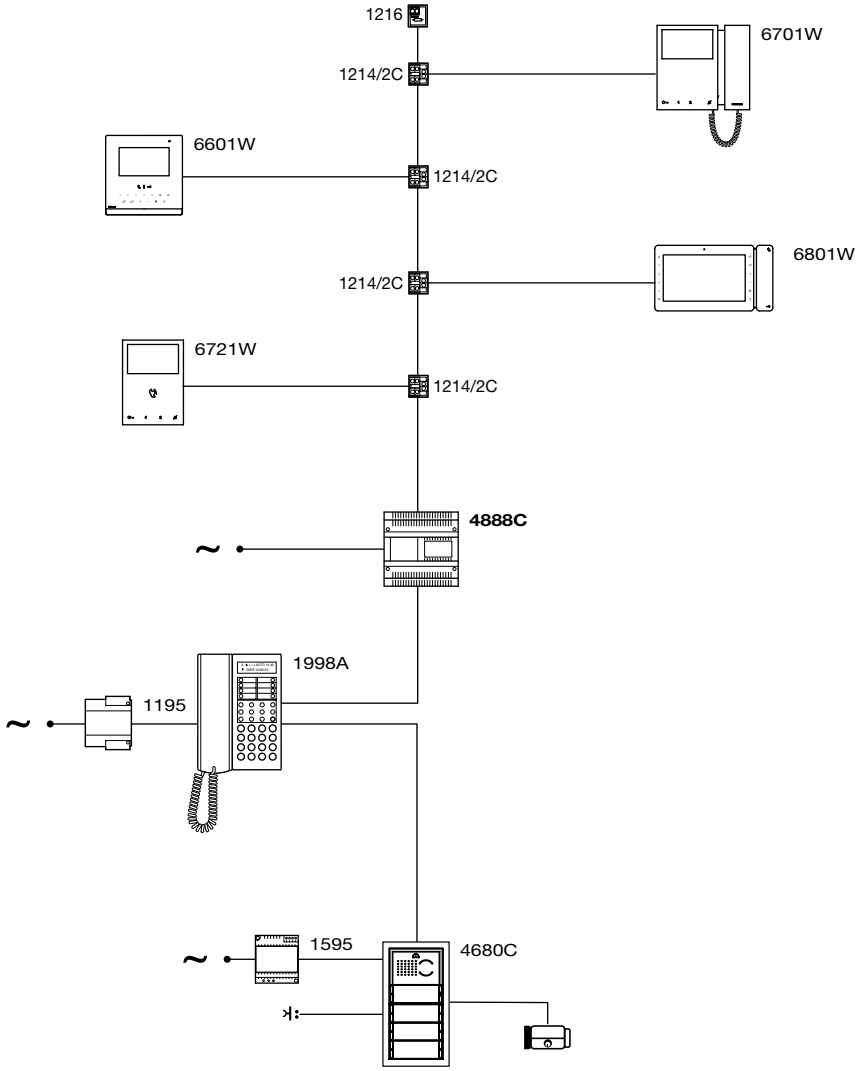

*SYSTEM EXPANDABILITY LAYOUT - **WITH N ENTRANCES***

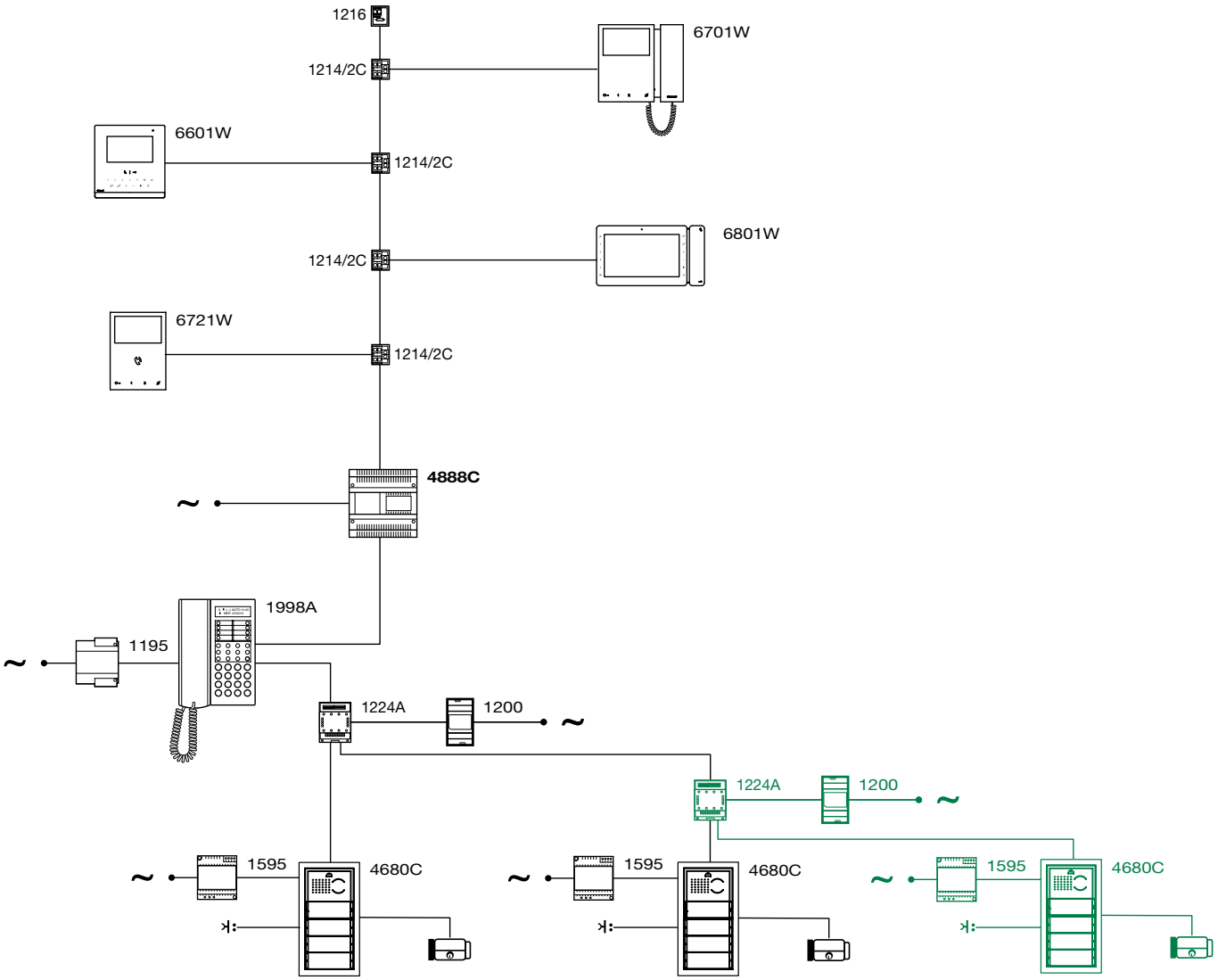

Audio Kit system

The Audio Kit is the ideal solution *for door-entry phone systems designed for 1 to 4 dwellings.*

The additional button module and further door-entry phones can be used to expand the system to cover up to 20 dwellings (with a maximum of 20 internal units in the system)

The audio kit can be expanded with further audio inputs and general accessories such as actuator relays for controlling stair lights or an additional door lock, additional ringtones etc.

A range of kits consisting of the Ciao entrance panel and door-entry phones 2738W and 6751W is available.

BASIC LAYOUTS

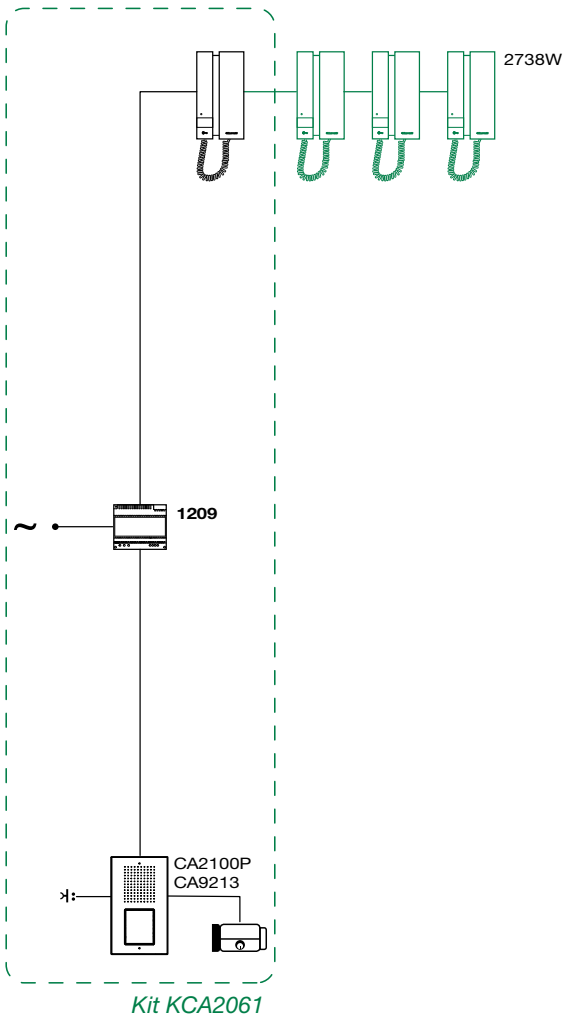

Kit KCA2061

ADDITIONAL FUNCTIONS *LAYOUT*

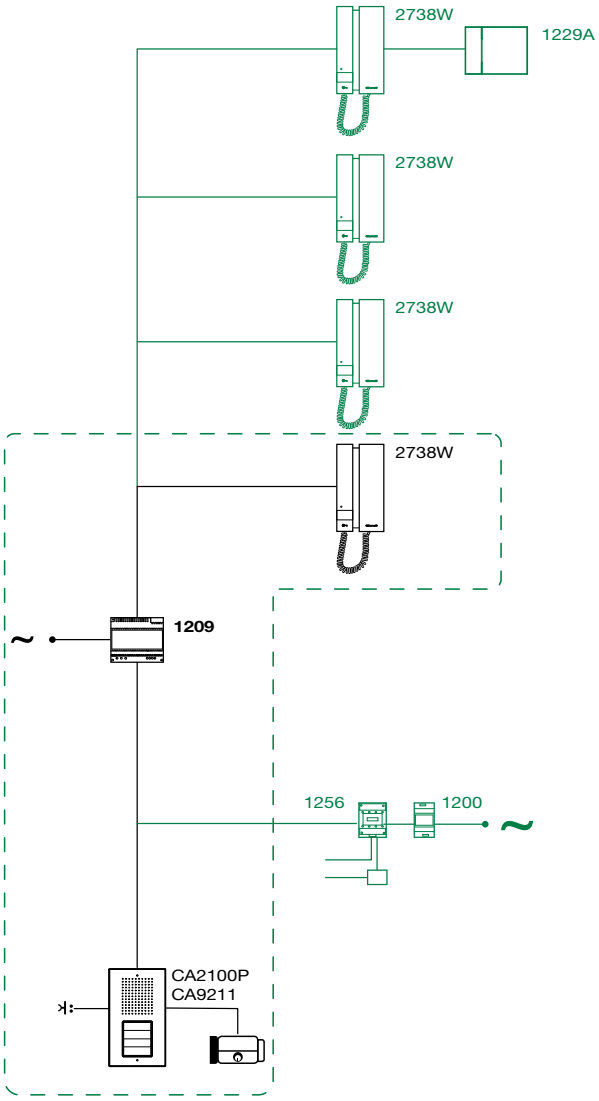

Kit KCA2061

SYSTEM EXPANDABILITY *LAYOUT*

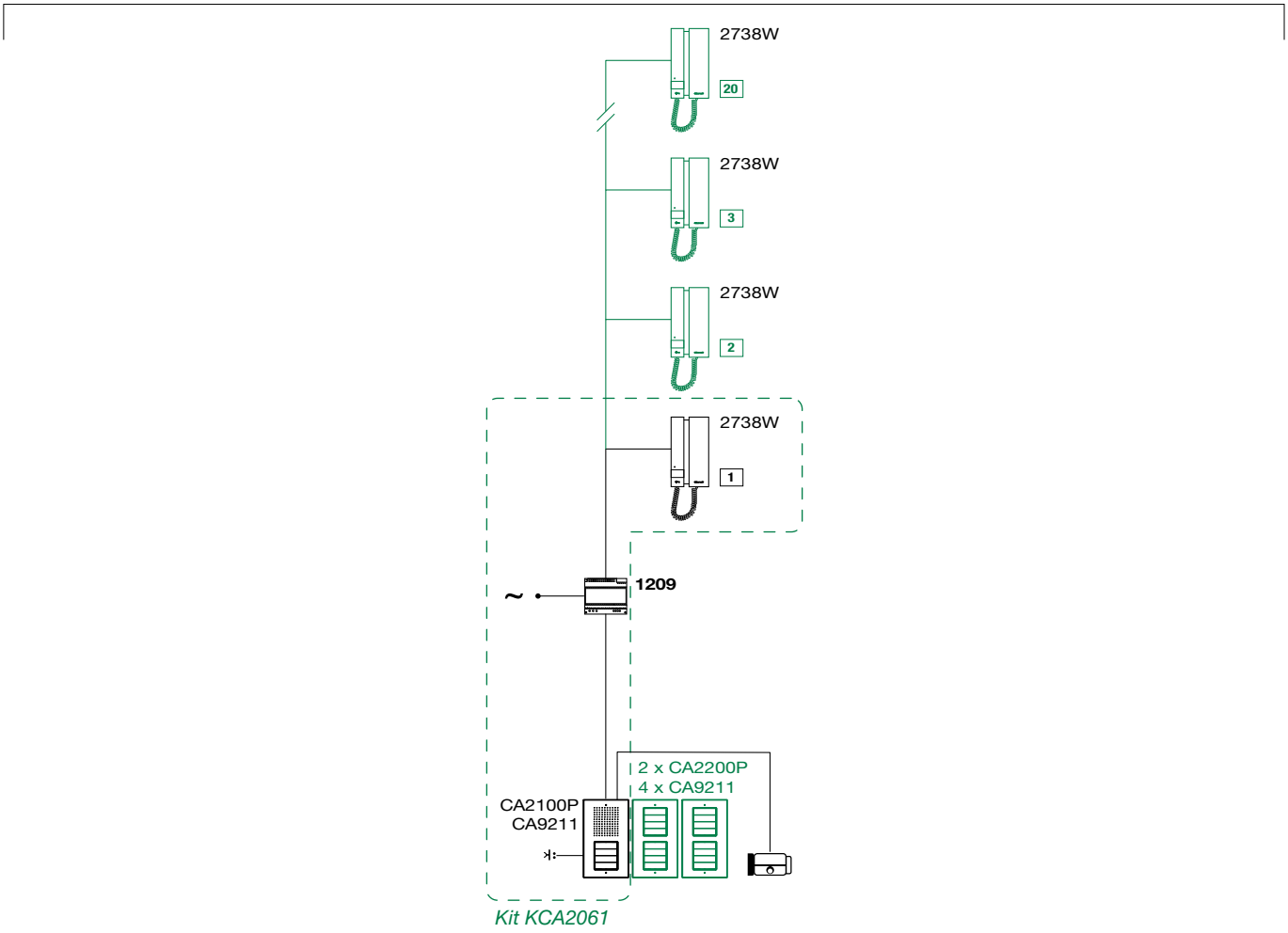

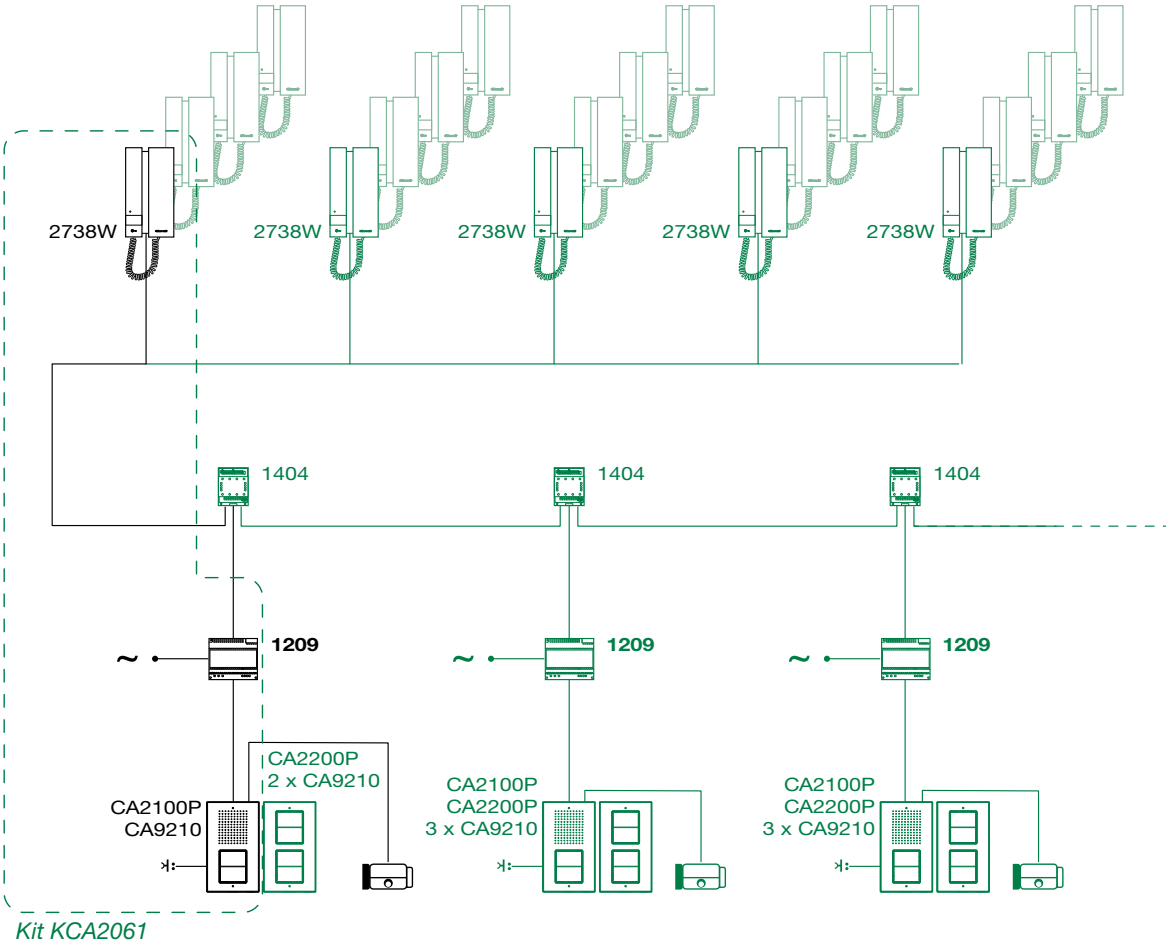

SB1 Audio System

The SB1 digital 2-wire system is the ideal solution for audio systems in medium/large residential complexes with up to 240 dwellings. The external unit is powered separately from a dedicated power supply unit.

Each apartment can have a maximum of 4 entry phones. The system can be expanded with the addition of a porter switchboard, actuators and further audio/video entrances, with either analog entrance panels or digital entrance panels with electronic directories.

*SYSTEM EXPANDABILITY LAYOUT - **WITH N ENTRANCES***

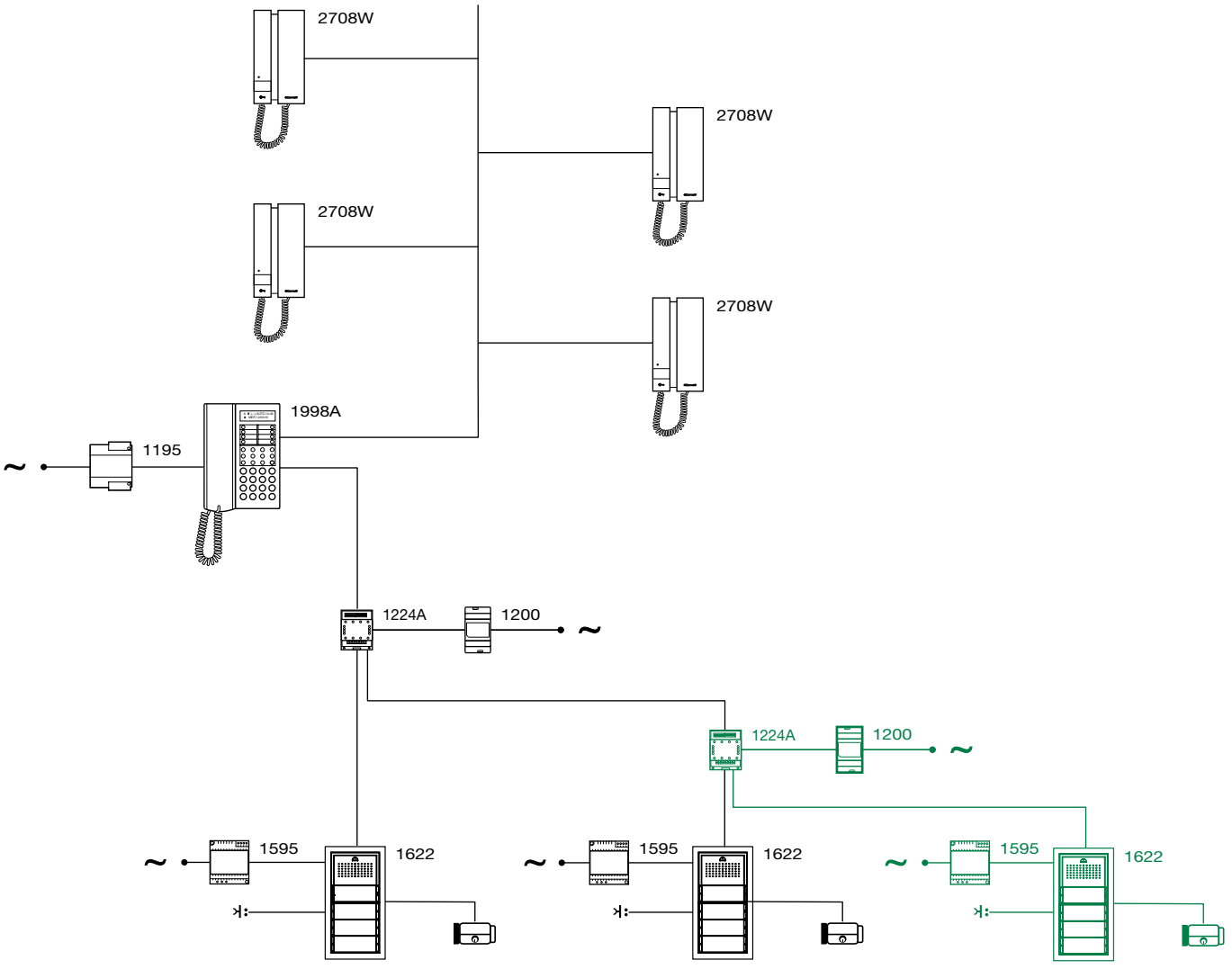

*SYSTEM EXPANDABILITY LAYOUT - **WITH N RISERS***

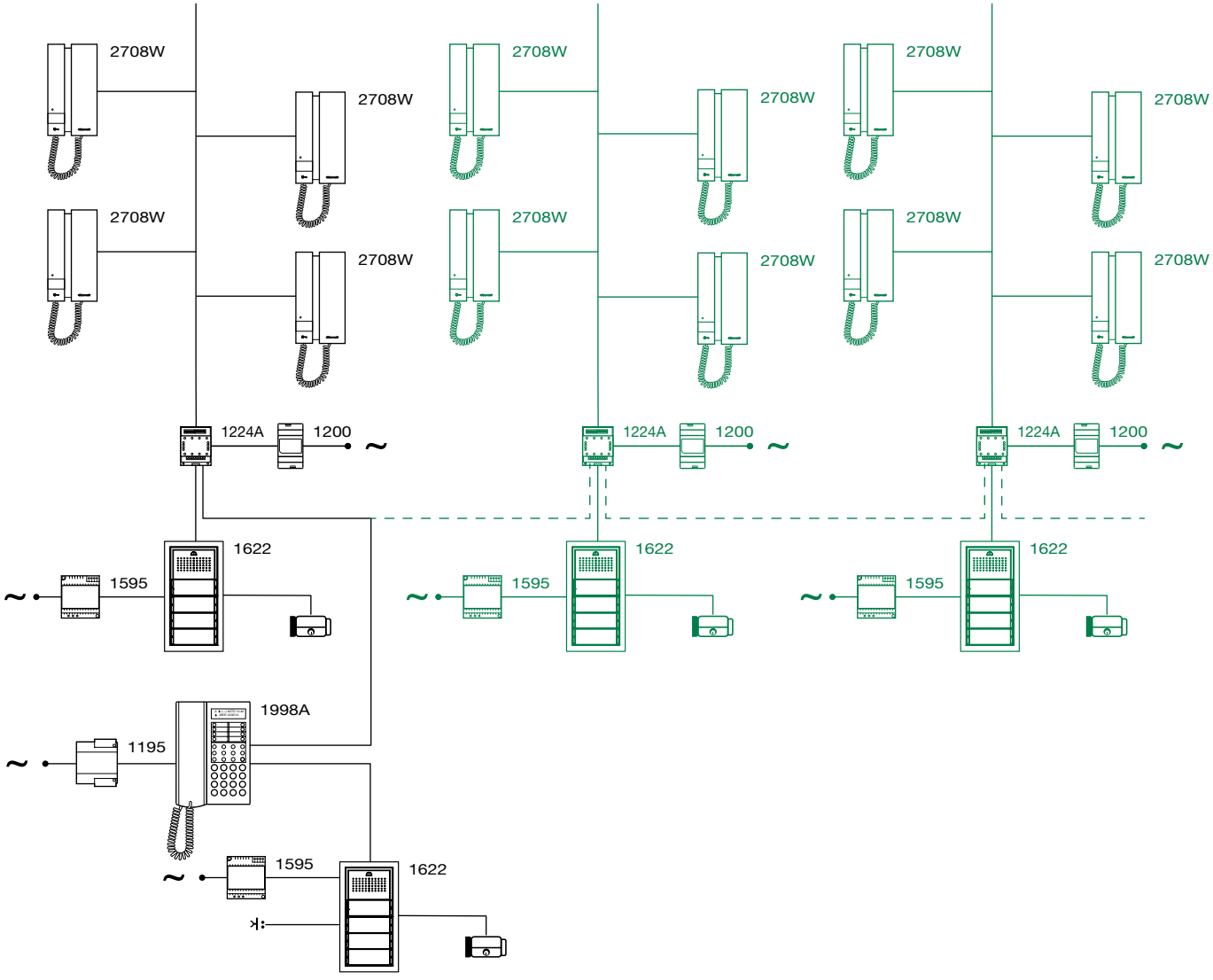

SB2 Audio System

The SB2 digital 2-wire system is the ideal solution for audio systems for multi-riser apartment blocks with up to 100 dwellings.

Each apartment can have a maximum of 4 entry phones. The system can be expanded with the addition of actuators and further audio entrances, with either analog entrance panels or digital entrance panels with electronic directories.

***BASIC** LAYOUTS*

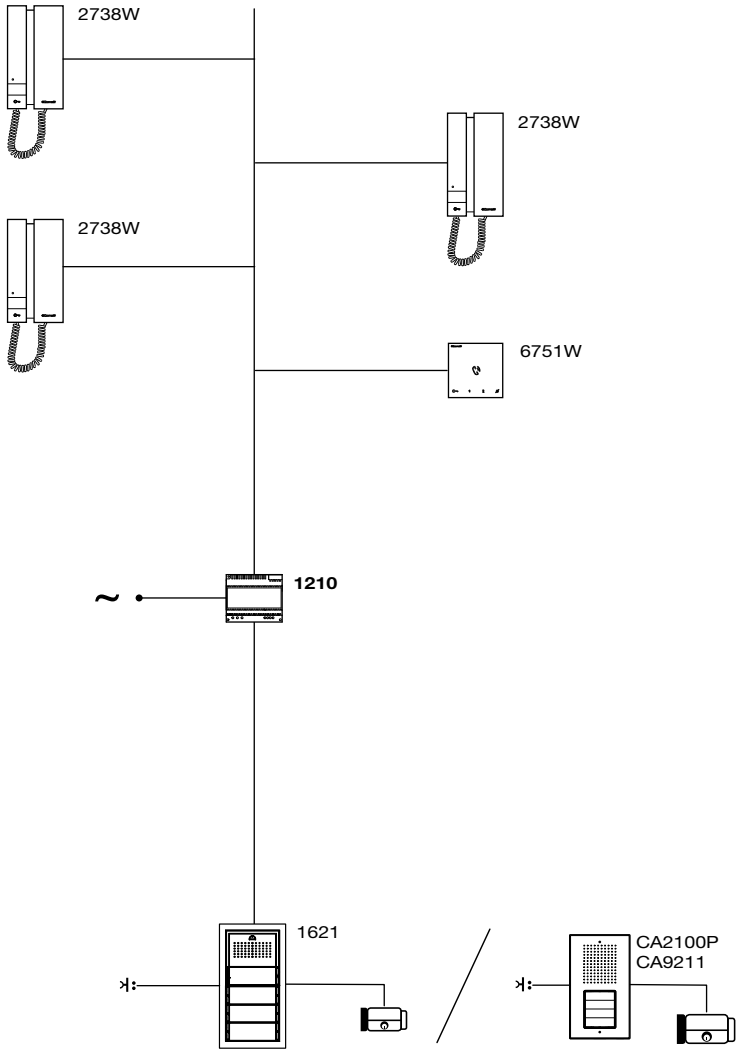

System comparison













Example applications	***Houses***	***Small residential complexes***	***Medium/large residential complexes***	***Houses***	***Small residential complexes***	***Medium/large residential complexes***
Wiring	2-wire bus	2-wire bus	2-wire bus + 2 wires for external unit power supply	2-wire bus	2-wire bus	2-wire bus + 2 wires for external unit power supply
External unit powered from Bus	Yes	Yes	No	Yes	Yes	No
Maximum distance between external and internal unit	200 metres	260 metres	max. 1200 m with dedicated accessories	260 metres	260 metres	800 metres
Internal units per user	4	4	4	4	4	4
Max. number of internal units in the system	up to 16	up to 240	up to 120.000	up to 20	up to 240	up to 240
Max. number of external units	up to 4	No limit	No limit	No limit	No limit	No limit
Switchboard	No	No	Yes	No	No	Yes
Use of existing cable	Yes	Yes	Yes	Yes	Yes	Yes
Combined audio/ video	Yes	Yes	Yes	Audio only	Audio only	Audio only
Intercom function as standard	Yes	Yes	Yes	Yes	Yes	Yes
CCTV integration	Yes	Yes	Yes	No	No	No

Video door entry functions

The following chapter describes the main functions available in video door entry systems:

- *send a **call from an external unit** to all the devices in an apartment*
  [“Call from external unit”]
- *send an **intercom call** from an internal unit to*
  [“Intercom Call”]
  - *all the devices in the same apartment*
  - *all the devices in another apartment*
  - *a single internal unit in an apartment*
  - *groups of internal units in the same or another apartment*
- *send a call to a **Main/Secondary porter switchboard***
  [“Call to a Main/Secondary switchboard”]
- *send a **panic alarm signal to a porter switchboard***
  [“Panic Alarm Signal”]
- *perform **self-ignition** to display on the monitor the image from the camera of an external unit (or from a remote camera connected to an audio/video module 1621VC / 1622VC)*
  [“Self-ignition function”]
- *open a door lock associated with an external unit (**lock-release function**)*
  [“Lock-release function”]
- *activate the relay of a specific **actuator** installed in the system to control a light or to open another gate*
  [“Actuator function”]
- *activate the **privacy function** to exclude the ringer in response to a call from an external unit and from the porter switchboard*
  [“Silent” mode (Privacy function)”]
- *activate the **doctor function** to program activation of the lock-release in response to a call from an external unit*
  [“Door opening upon call (Doctor function)”]
- *control **operation of a CCTV camera** and **cycle through** the connected cameras*
  [“Operation and cycling of CCTV cameras”]
- *use the ringers of internal units to signal pressing of the call button at the apartment entrance (**floor door call**)*
  [“Floor door call”]
- *reproduce the call signal in rooms without an entry phone or door entry monitor, with the installation of an **additional ringer***
  [“Additional ringer”]
- *monitor the status of a door (open/closed) from an internal unit on the **door open indicator LED***
  [“Door open indication”]
- *activate/deactivate the **automatic answer** operating mode*
  [“Automatic answer (Hands-Free function)”]
- *start audio/video recording in the event of no reply*
  [“Video recording on missed call (Video memory function)”]
- *view the video messages stored in the memory*
  [“Video messages”]
- *to utilise all door entry monitor functions remotely via smartphone / tablet*
  [“Using all door entry monitor functions via smartphone / tablet”]

Some functions are only available on certain systems and devices.

Call from external unit

You can send a call from an external unit to all the devices in an apartment, in order to enter into communication with them.

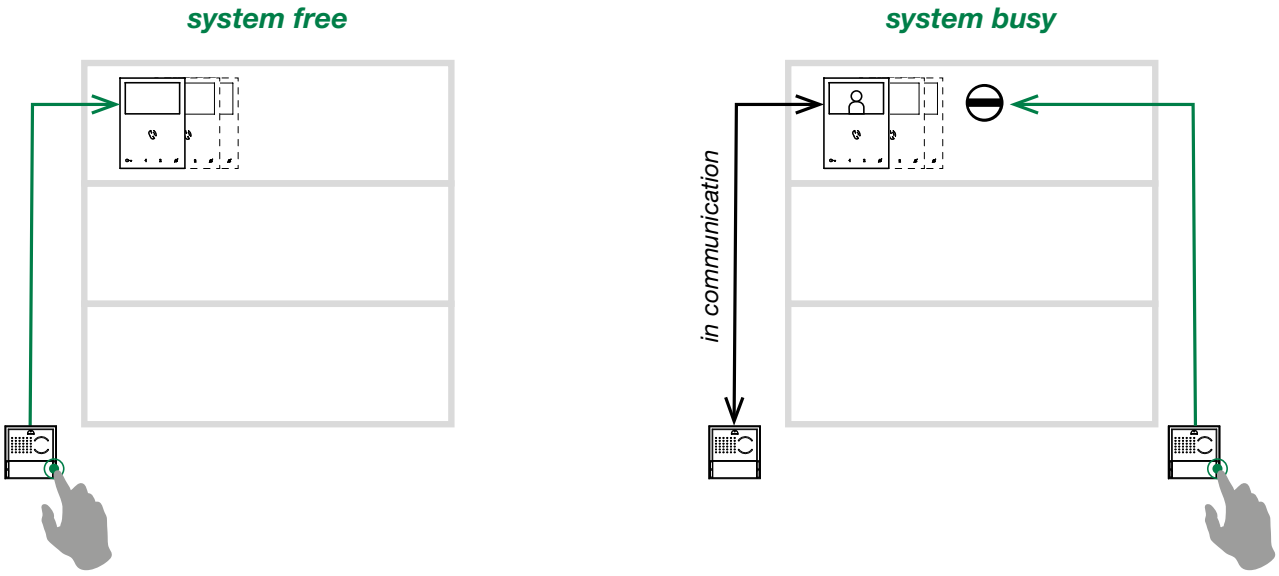

1. To send the call from an external unit, touch the button corresponding to the user you want to call.
   - » **If the system is free:** the *call sent* LED will flash and the confirmation tone will sound.
   - » **If the system is busy:** the *system busy* LED will flash and the external unit will emit the system busy tone.
2. From the internal unit, press the audio button (or pick up the handset) to reply to the call.

» *The call will be terminated for the other devices with identical call address.*

» *The active audio LED will illuminate on the external unit.*

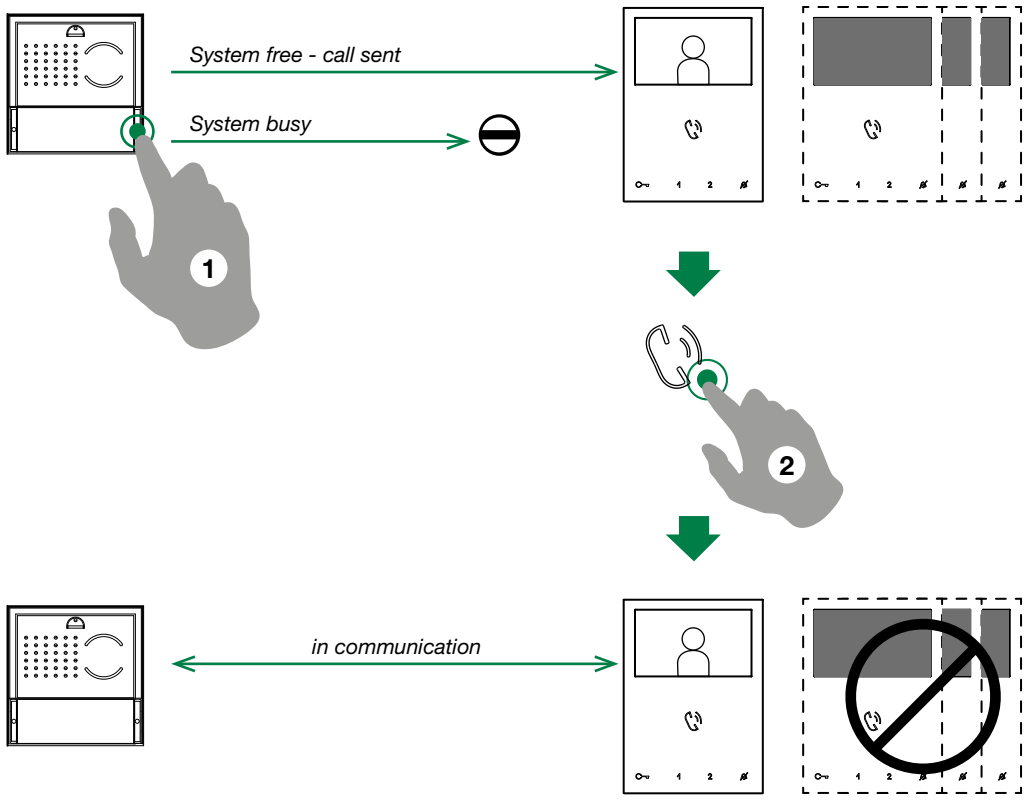

On receipt of a call from an external unit:

» *All the monitors to which the call is addressed ring (and, on handsfree monitors, the audio and lock release buttons flash).*

» **On the main internal monitor/s,** the video image from the external unit will appear automatically. Any other secondary monitors in the same family unit will remain off.

▶ **On secondary monitors,** the video image can be displayed (without answering the call) by pressing the button programmed with the function self-ignition/video request **[AI/👁]**. On pressing the self-ignition/video request button, the secondary monitor will receive the video signal, while the main monitor will switch off.

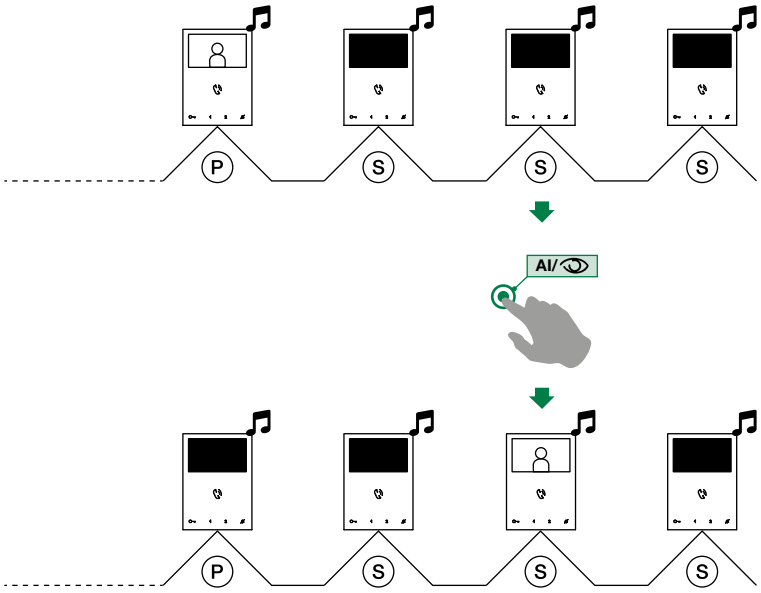

P *Main Monitor*
S *Secondary Monitor*
AI/ *Self-ignition function*

▶ **When responding to a call f**rom the external unit using a secondary door entry monitor, on pressing the audio key or lifting the handset the image will be automatically displayed on the monitor.

» *The call will be terminated for the other devices with identical call address.*

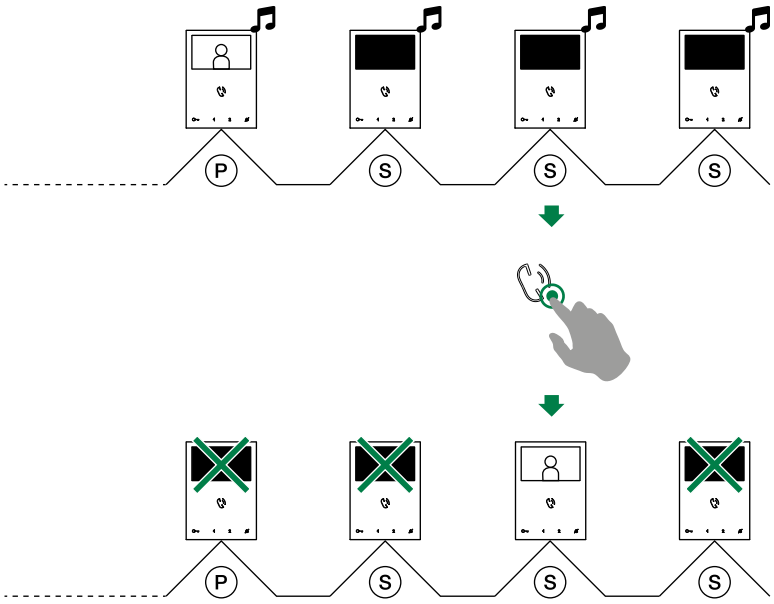

P Main Monitor
S Secondary Monitor

Intercom call

From an internal unit you can send an intercom call to:

- ***all devices of the same apartment (****internal general intercom call)*
- ***all devices of another apartment*** *(external general intercom call)*
- ***a single internal unit*** *of an apartment identified by a dedicated intercom address different to the address that identifies the apartment (intercom call to selective address).*
- ***a group of internal units*** *of the same apartment or an apartment identified by a dedicated intercom address different to the address that identifies the apartment (selective group intercom call).*

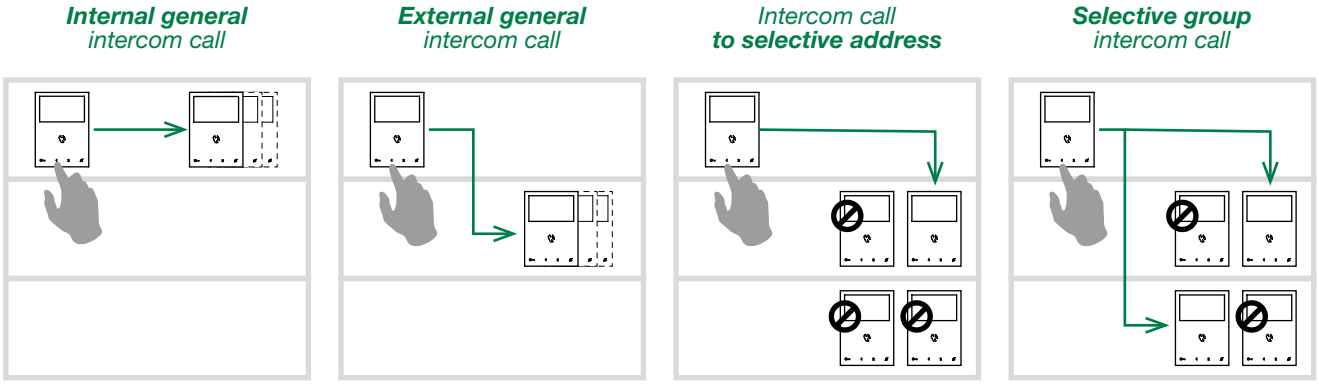

1. From the internal unit, press the button programmed with the intercom function **[INT]** to send the call.
   - » **If the system is free:** the call will be sent to the desired address. *All the monitors to which the call is addressed will ring (and, on handsfree monitors, the audio and lock release buttons will flash).*
   - » **If the system is busy:** the *privacy LED* on the internal unit making the call will flash 4 times.
2. On the receiving unit, press the audio button (or lift the handset) to enter into communication with the caller.
   - » *The call will be ended for the other devices.*
   - ▶ Press the *audio button* again (or hang up the handset) to terminate the call.

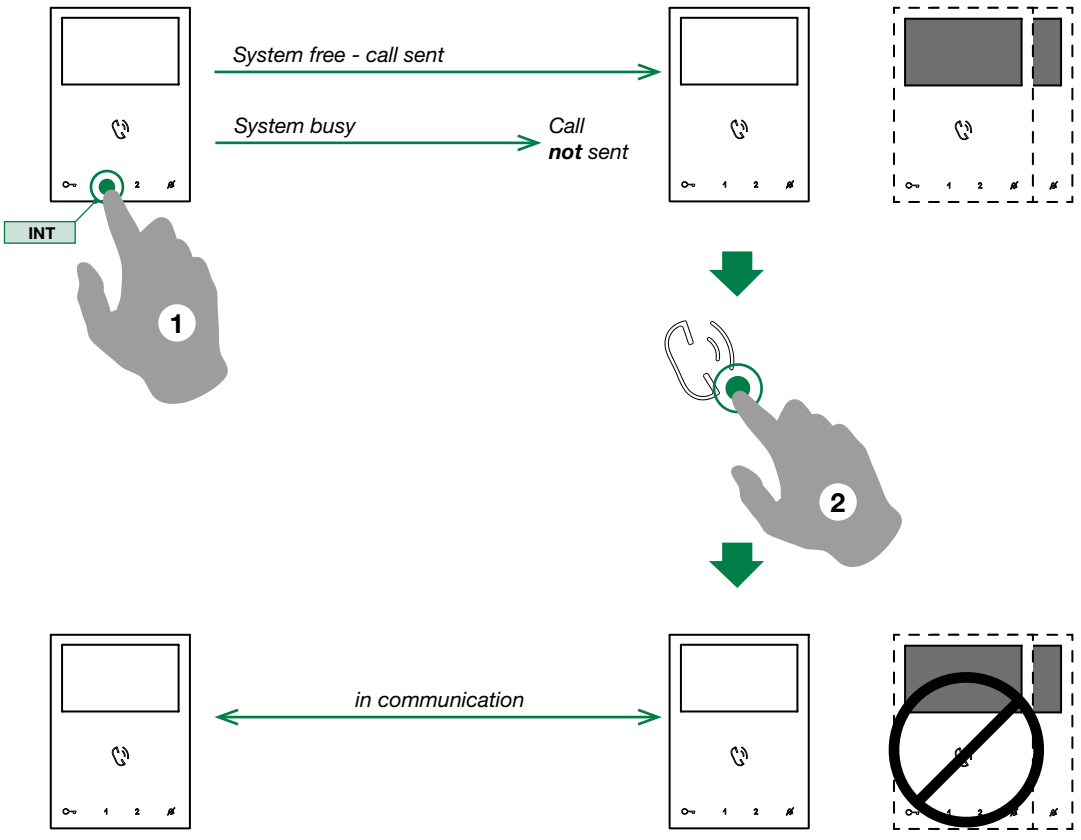

A call from the external unit always takes priority over an intercom communication.

» In this case, users who are already speaking will hear a tone similar to the ringtone, if the call is addressed to them, or otherwise a triple signalling tone will sound and the video image from the external unit from which the call was made will appear (in the case of a main monitor).

▶ To terminate the call in progress and enter into communication with the external unit, hang up and then lift the handset again (or press the audio button 2 times).

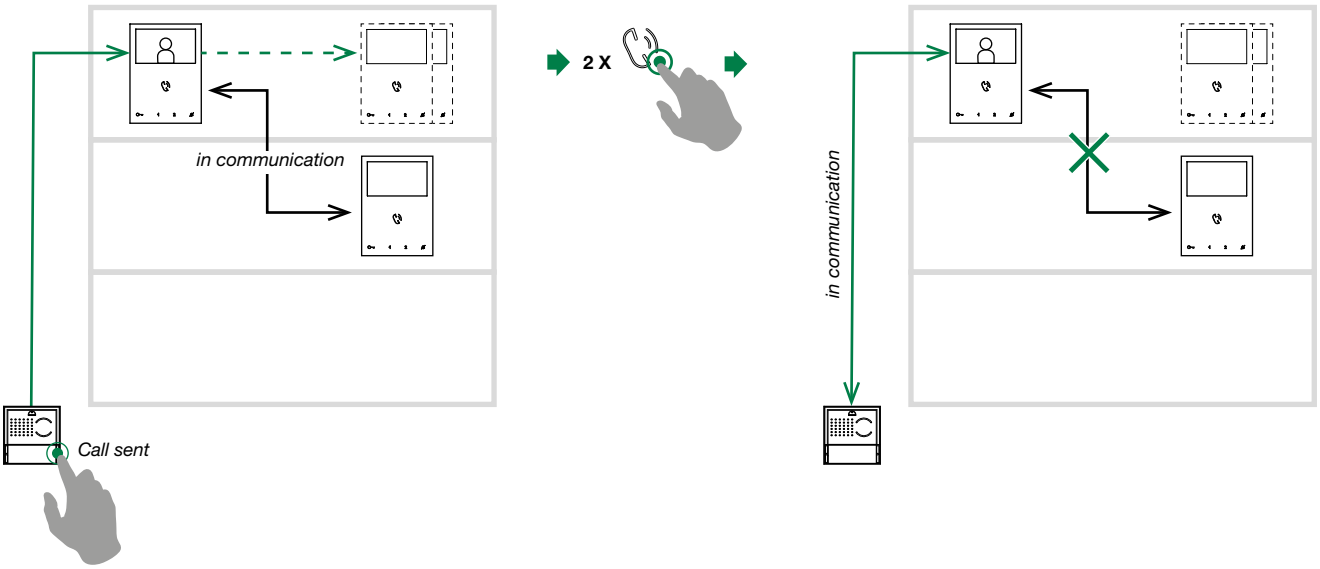

Call to a Main/Secondary switchboard

*From an internal unit, you can send a call to a **main switchboard** or a **secondary switchboard.***

1. From the internal unit, press the button programmed with the *main/secondary switchboard call function* **[CCP/CCS]** to send the call.
   - » **If the system is free:** the call will be sent to the desired switchboard.
   - » **If the system is busy:** *the privacy LED* on the internal unit making the call will flash 4 times.
2. Lift the handset of the switchboard to enter into communication with the caller.
   - » *on handsfree monitors, the audio button will flash to indicate there is a call in progress.*

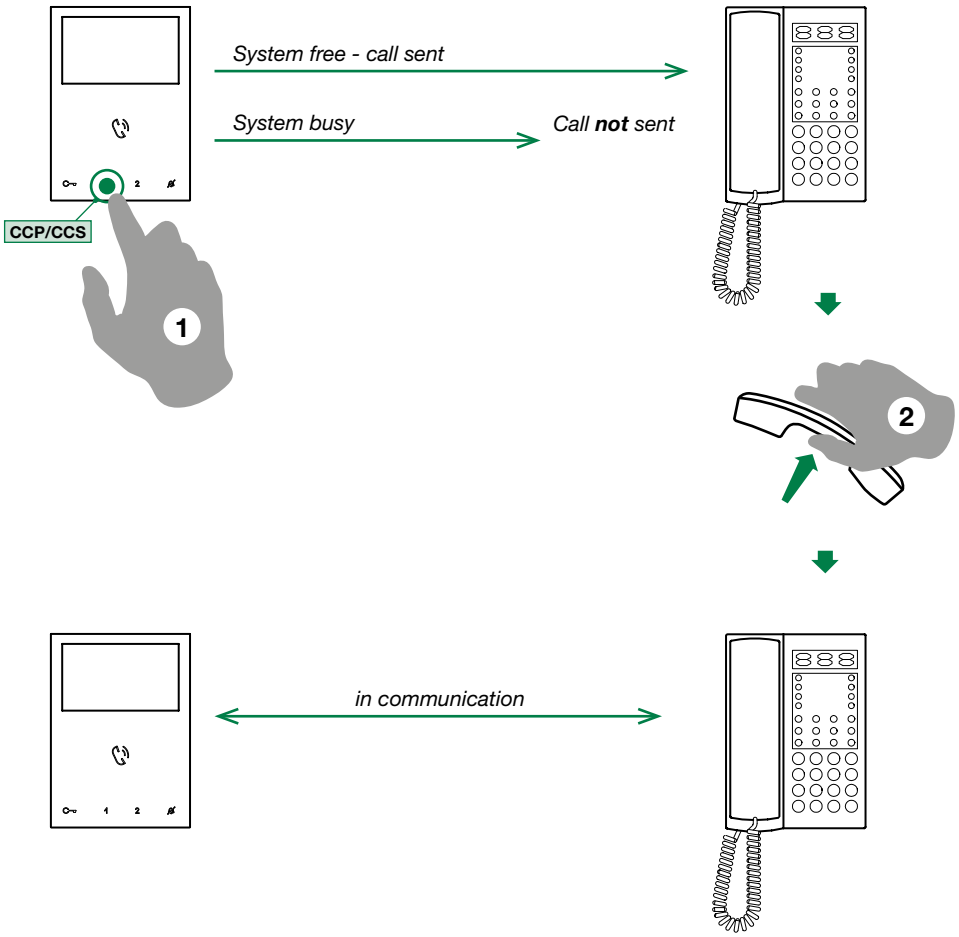

Panic Alarm Signal

From an internal unit, you can send a panic alarm signal to the switchboard.

The panic alarm signal has priority over all other calls.

▶ Touch the button programmed with the *function panic alarm signal* **[PAN]** to send the signal.

Self-ignition function

Enables display on the door entry monitor the image from the camera of an external unit or from a remote camera (connected to an audio/video module 1621VC or 1622VC).

✓ Self-ignition is possible only when the system is free.

▶ On the internal unit, touch the button programmed with the function *self-ignition* **[AI/👁]** to display on the monitor the image from the camera.

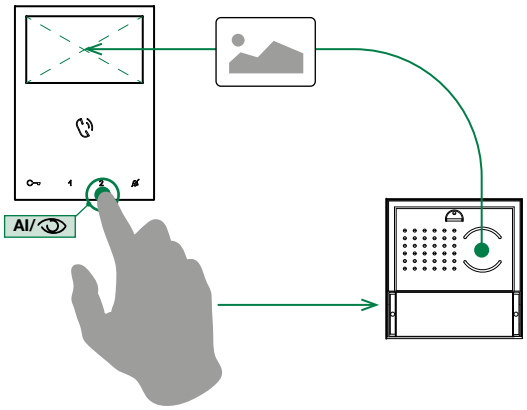

▶ On the internal unit, touch the button programmed with the function **[AI/👁]** repeatedly to toggle between two external units and display the images from the respective cameras.

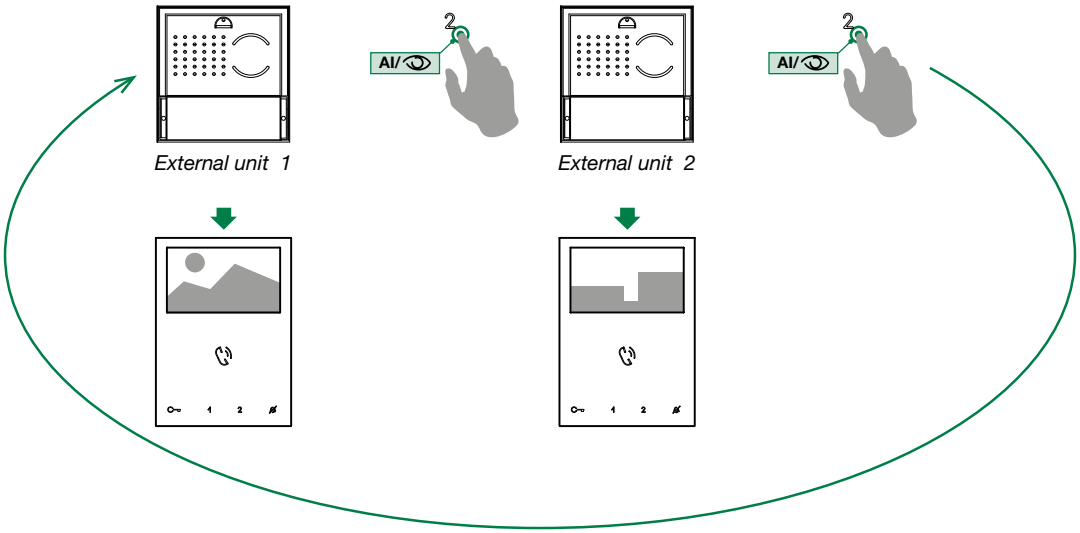

Lock-release function

Enables opening of a door lock associated with an external unit.

✓ **During a call in progress or during self-ignition**

▶ On the internal unit, touch the lock release button [⊸O] to activate the lock of the external unit making the call

» the *door open* LED will illuminate on the external unit

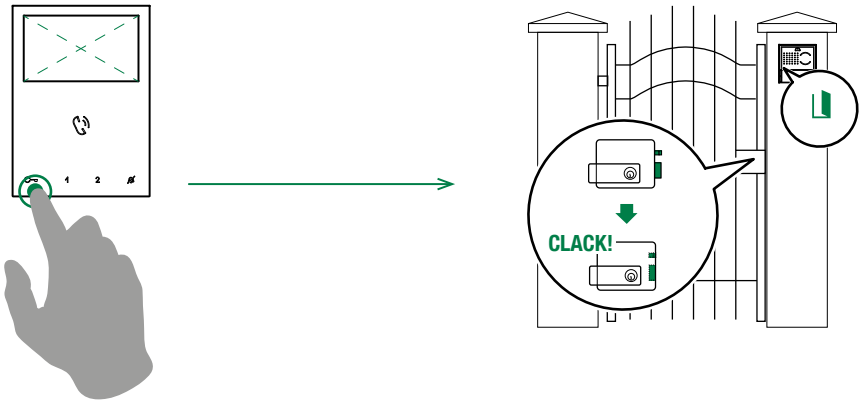

✓ **With the system in standby**

▶ On the internal unit, touch the lock release button [⊸O] to activate the lock of the external unit

» *the door open LED will illuminate on the external unit*

Actuator function

Enables activation of the relay of a specific actuator (generic or addressable) installed in the system to control a light or to open another gate.

▶ On the internal unit, touch the button programmed with the actuator **[ACT]** function to perform the configured operation

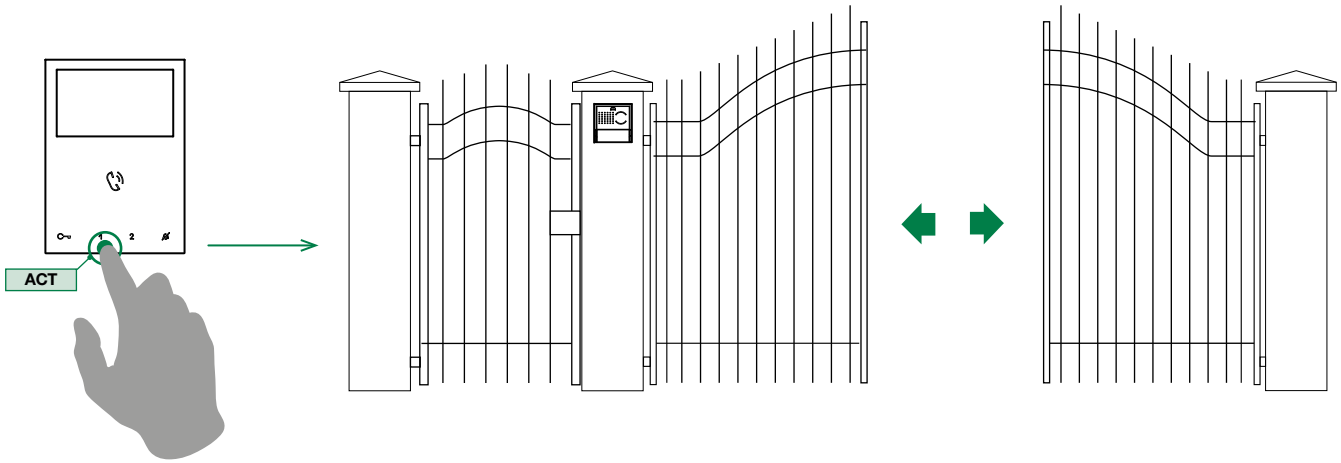

"Silent" mode (Privacy function)

Enables the ringer to be disabled for calls from the external unit and from the switchboard.

▶ On the internal unit, touch the button programmed with the *"Silent" mode* [🔔] function to disable the ringer in response to a call.

» the *LED* [🔔] illuminates steadily to indicate that the function is active.

Door opening upon call (Doctor function)

Enables automatic operation of the lock-release in response to a call from the external unit.

▶ On the internal unit, touch the button programmed with the Door opening upon call **[D]** function to enable automatic operation of the lock-release in response to a call from an external unit.

» the *LED* [🔔] flashes 3 times every 5 seconds to indicate that the function is active.

Operation and cycling of CCTV cameras

With the use of the specific accessory (Art. 1409, 1259C), you can control operation of a CCTV camera and cycle through the connected cameras.

✓ **During a call in progress or during self-ignition**

▶ On the internal unit, touch the button programmed with the *actuator* **[ACT]** function to display on the monitor the image from the camera.

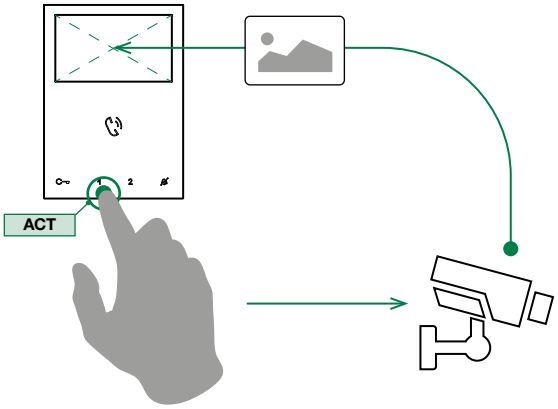

▶ On the internal unit, touch the button programmed with the *actuator* **[ACT]** functionrepeatedly to cycle between all the available cameras and return to display of the image from the external unit.

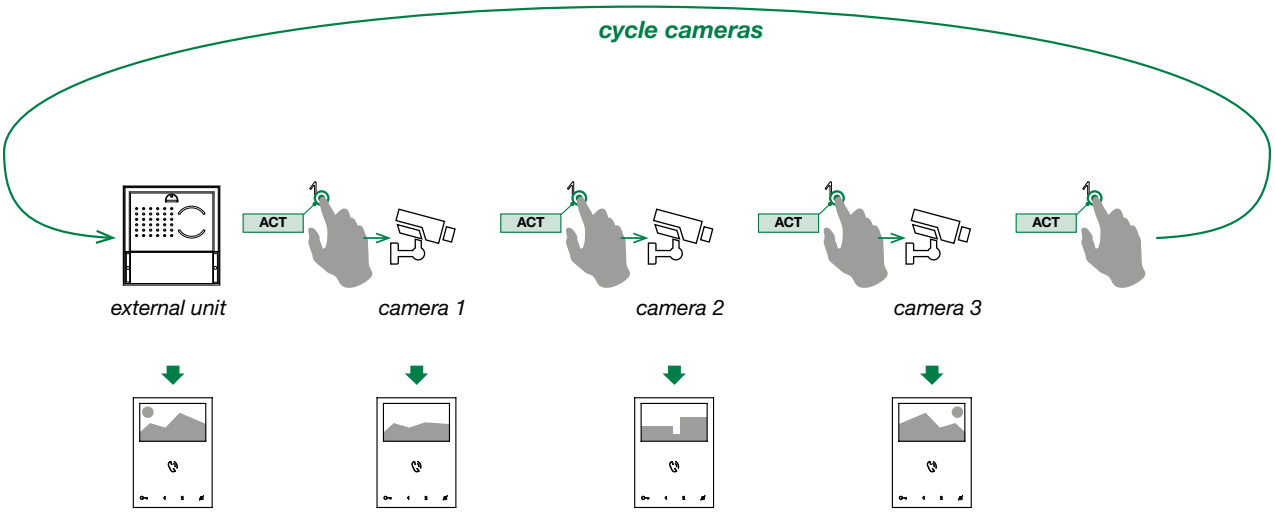

Floor door call

This function allows the ringer of the internal unit to be used to signal the pressing of a call button installed outside the entrance door to an apartment.

- ▶ To use the “floor door call” function, simply connect the terminals CFP CFP of the internal unit to the floor door call button.

» *On pressing this button, the internal unit will emit a different sound to the normal call ringtone.*

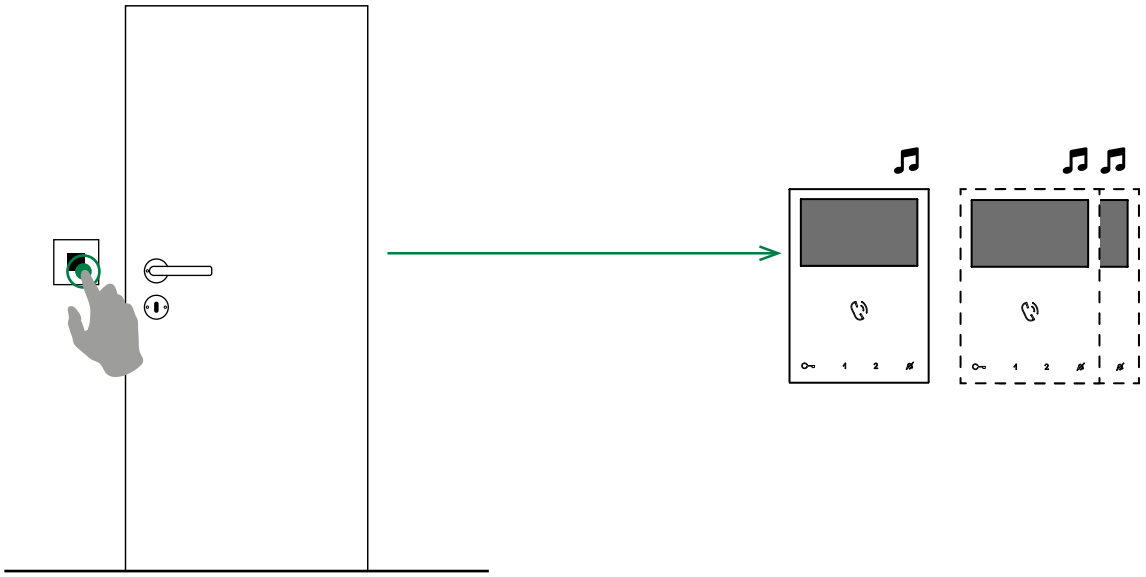

Additional ringer

The additional ringer allows to reproduce the call signal in rooms without an entry phone or door entry monitor.

- ▶ To use this function, simply connect an additional ringer to the internal unit.
  If the monitor is equipped with terminals S+ S-, you can connect an additional ringer 1229 or relay 1122/A to activate a high-power ringer.
  If the monitor is not equipped with terminals S+ S-, in Building Kit and SBTOP systems, the additional ringer 1229A can be connected directly to the 2-wire bus.

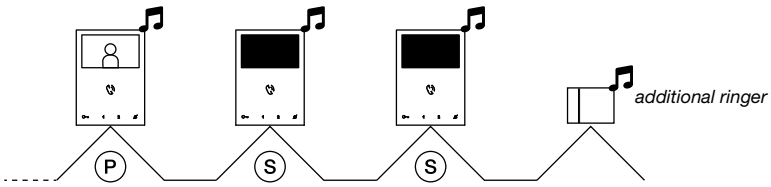

Door open indication

It is possible to monitor the status of a door from an internal unit.

A normally-open sensor must be connected to the terminals GND and DO on the external unit.

The internal unit will signal the door status on the Door open indicator LED [⊸O] (continuous flash: door open. LED off: door closed).

In systems with Art. 1405 the "door open indication" function can only be used on the secondary external unit; in systems with Art. 1404 it is not possible to use this function.

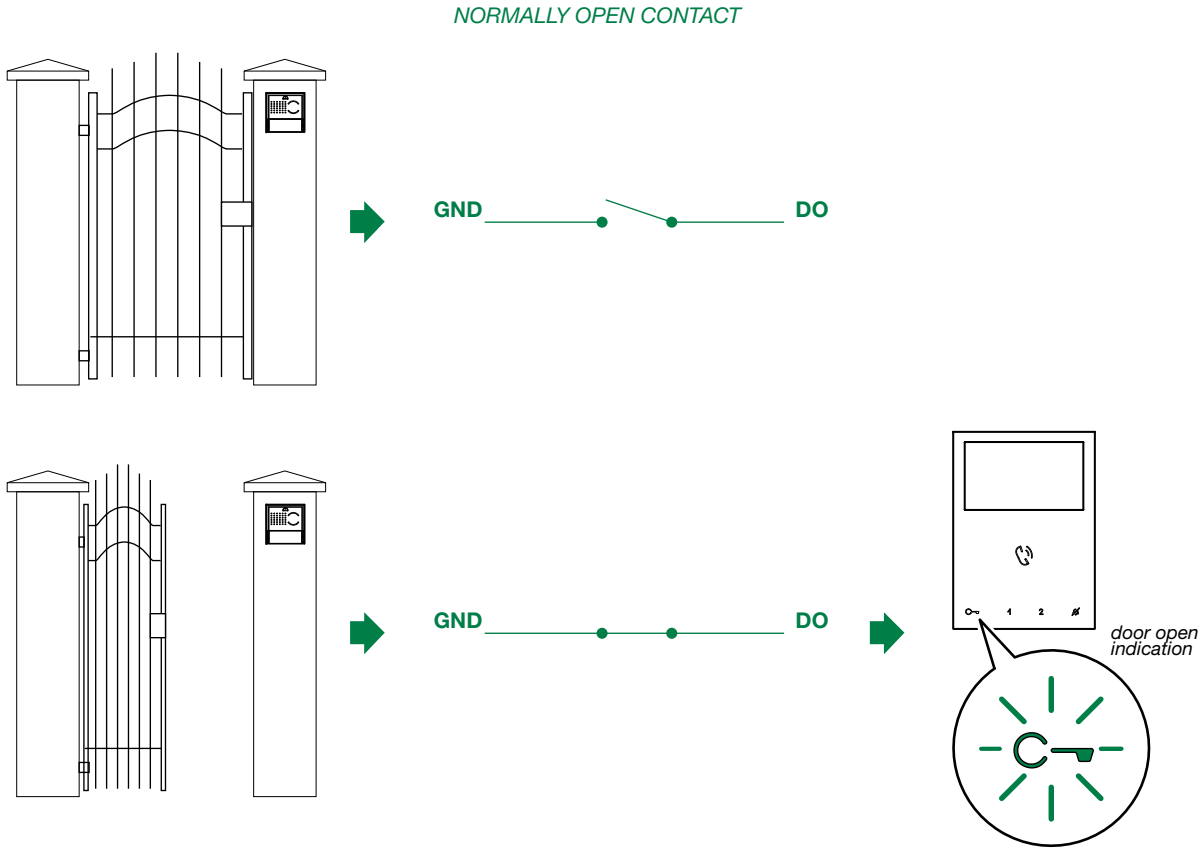

Automatic answer (Hands-Free function)

Handsfree devices offer the Automatic answer (Hands-Free function) operating mode, which allows incoming calls to be answered without pressing the audio button.

▶ To activate/deactivate this function, press the audio button until you hear a confirmation tone.

» *audio button LED ON indicates that the function is activated*

» *audio button LED OFF indicates that the function is deactivated*

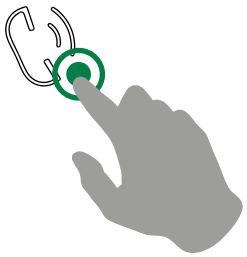

Video recording on missed call (Video memory function)

The Video memory function automatically starts video recording in the event of no reply.

- ▶ Scroll through the menu to the icon and press ✓ to confirm and enable the function
  - » *The blue icon indicates that the function is active.*

Video messages

This function allows you to view the video messages stored in the memory.

- ▶ Scroll through the menu to the icon and press ✓ to confirm and access the video memory submenu
  - » *The blue icon indicates that there is at least one video message that has not yet been viewed.*

Using all door entry monitor functions via smartphone / tablet

The Comelit application installed on smartphones or tablets allows you:

- to receive audio and video calls from external unit
- to make intercom calls with other internal devices
- record videos from external unit and remote camera
  to record video messages on missed calls
- to view recorded video clips
- to activate actuators
- to save battery life by only activating the App on receipt of a call, thanks to push notifications
- to manage/configure several systems using your mobile device

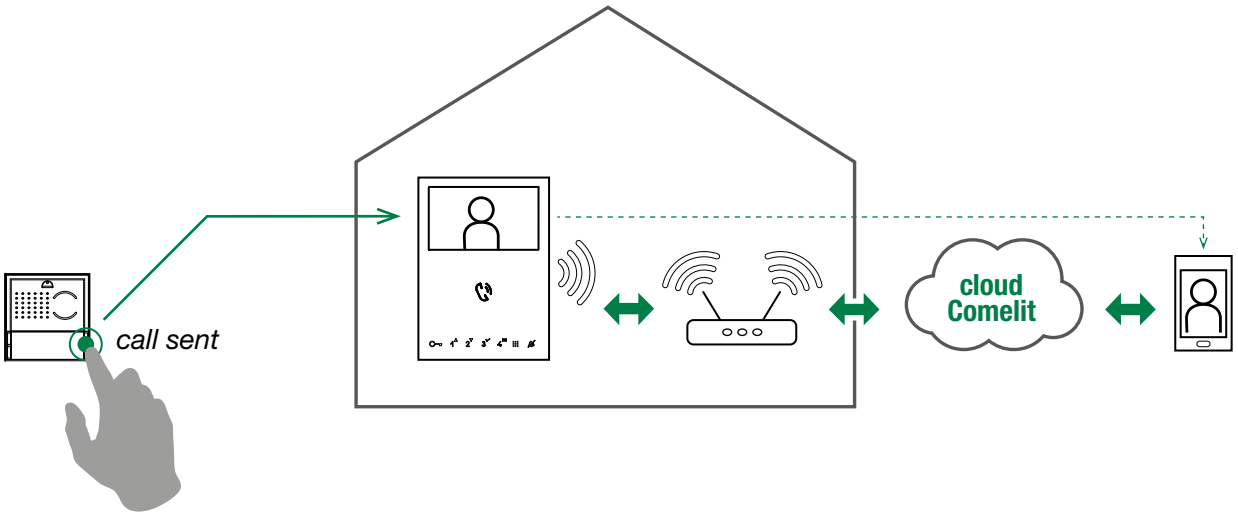

Table of contents

Warning

System performance 39
Operating distances 40
Maximum system expansion 41
Maximum expansion per apartment 41
Example of maximum expansion per apartment 42

Wiring diagrams 43
Single-family video entry phone system 43
Two-family video entry phone system 45
Four-family video entry phone system 46
Single-family video entry phone system with second external unit . 47
Single-family video entry phone system with three external units 48
Video entry phone system with two single-family units and main external unit 49
Variants: additional 2 secondary monitors in cascade connection . 50
Connection of main monitor with local power supply 51
Variants: addition of branched secondary monitor 52
Use of actuator relay Art. 1256 53
Use of remote camera module Art. 1409 54
Use of additional bell Art.1229A 55

System performance

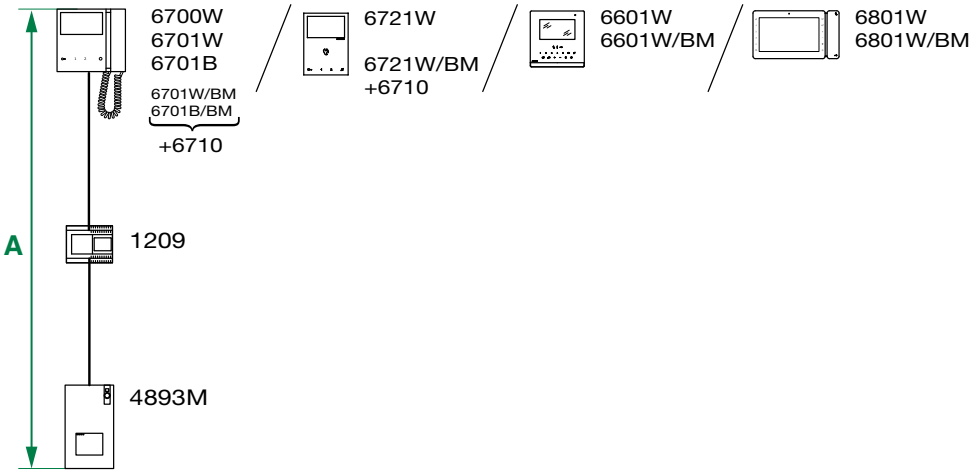

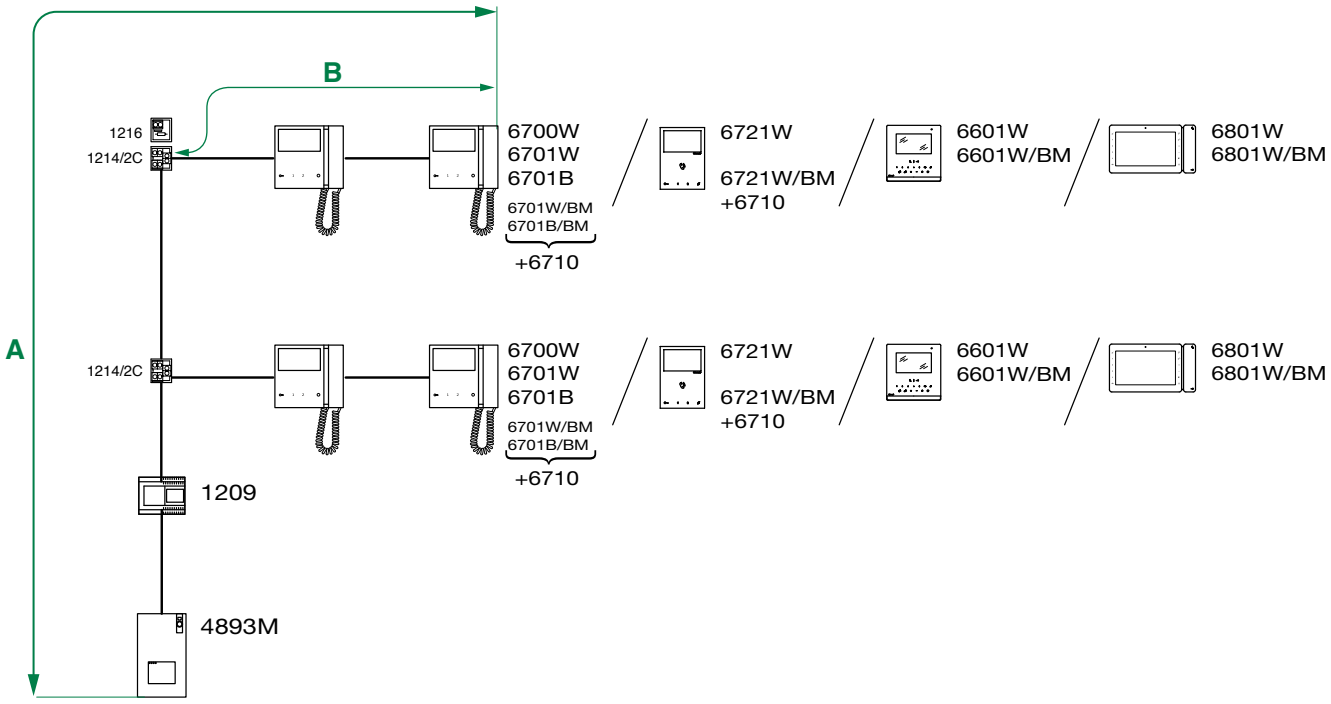

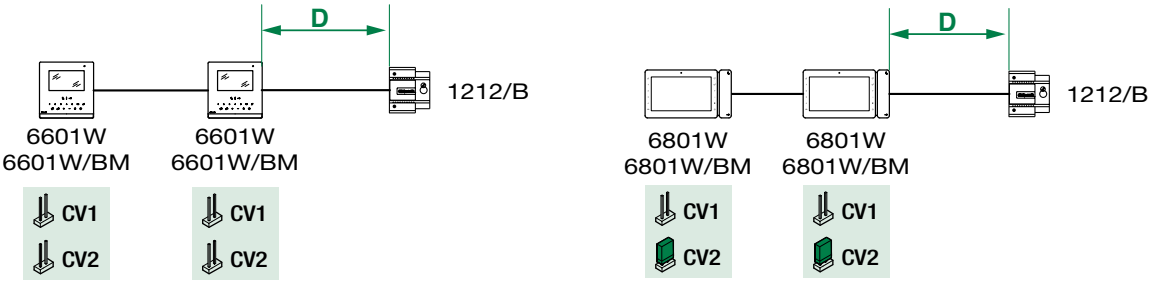

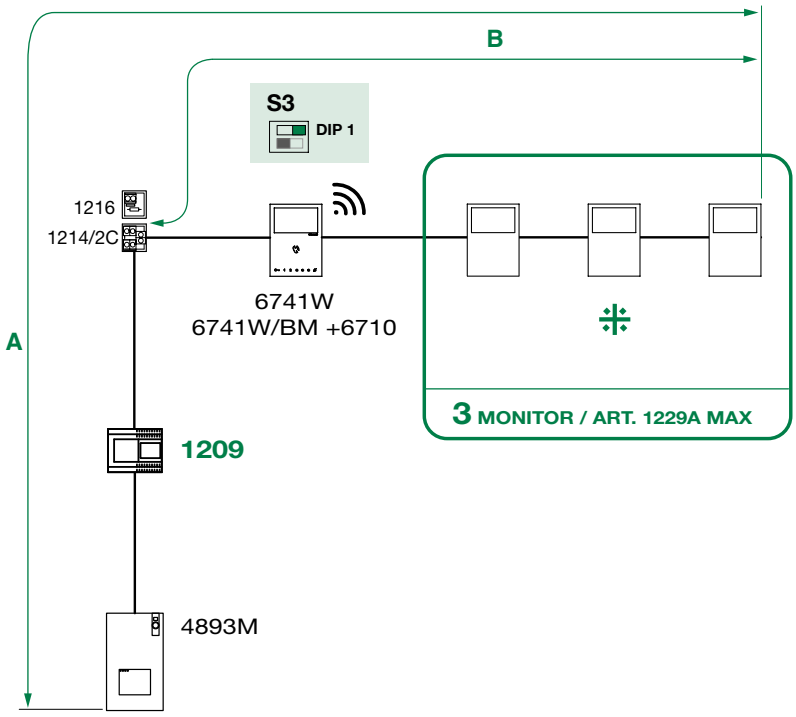

⁜ Compatible secondary monitors: 6700W, 6701W (/BM), 6701B (/BM), 6721W (/BM), 6601W(/BM), 6801W (/BM)

Operating distances

	A MAX	B MAX	D MAX
Comelit Art. 4577/4579 1 mm² (Ø 1,2 mm AWG 17)	200 m (655 feet)	100 m (330 feet)	100 m (328 feet)
UTP5 cat. 5 0,2 mm² (Ø 0,5 mm AWG 24)	100 m (330 feet)	60 m (195 feet)	
0,28 mm² (Ø 0,6 mm AWG 23)	100 m (330 feet)	60 m (195 feet)	10 m (32,5 feet)
0,5 mm² (Ø 0,8 mm AWG 20)	100 m (330 feet)	60 m (195 feet)	25 m (82 feet)
1 mm² (Ø 1,2 mm AWG 17)	100 m (330 feet)	60 m (195 feet)	50 m (164 feet)
1 mm² (Ø 1,2 mm AWG 17)	80 m (260 feet)	40 m (130 feet)	
1,5 mm² (Ø 1,4 mm AWG 15)	100 m (330 feet)	60 m (195 feet)	100 m (328 feet)
*UTP5 cat. 5 0,2 mm² (Ø 0,5 mm AWG 24) MULTI PAIR CABLE # 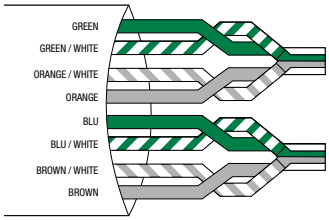	200 m (656 feet)	70 m (230 feet)	

UTP cable with multi-cable connection: FOLLOW THE COLOURS SHOWN IN THE DIAGRAM!

Maximum system expansion

Devices	 6700W 6701W(/BM) 6701B(/BM)	 6721W(/BM)	 6601W(/BM)	 6801W(/BM)	 6741W
Maximum number of internal units that can be powered from Art. 1209	**16**	**16**	**16**	**16**	**4***
Call repetition devices that can be used	**1229A**	**1229A**	**1229A 1229#**	**1229A 1229#**	**1229A**

* For further information, see the manual of Art. 6741W

\# For installation information and limits, consult the relative manual.

Maximum expansion per apartment

Devices	 6700W 6701W(/BM) 6701B(/BM)	 6721W(/BM)	 6601W(/BM)	 6801W(/BM)	 6741W
Maximum number of internal units (including call repetition devices) with the same user code	**4**	**4**	**4**	**4**	**1***
Maximum number of main internal units powered from the riser	**1**	**1**	**1**	**1**	**1**
Maximum number of main units that can be powered by Art. 1212/B	**/**	**/**	**3**	**3**	**/**

* A single 6741W(/BM) monitor can be installed for each user code; this will also be the only main monitor.
Up to 3 secondary monitors can be added (6700W, 6701W (/BM), 6701B (/BM), 6721W (/BM), 6601W(/BM), 6801W (/BM)).

Example of maximum expansion per apartment

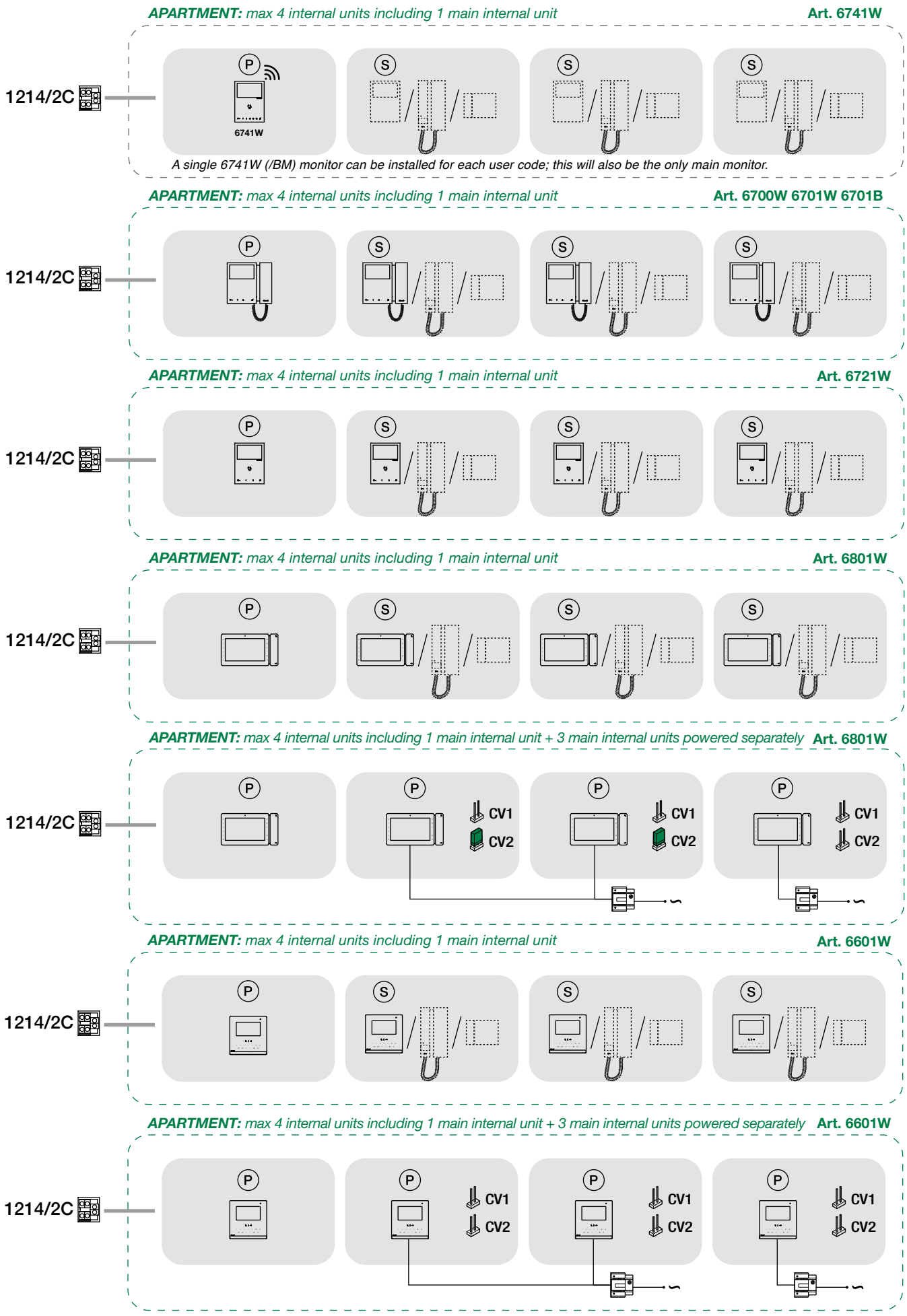

Wiring diagrams

Single-family video entry phone system

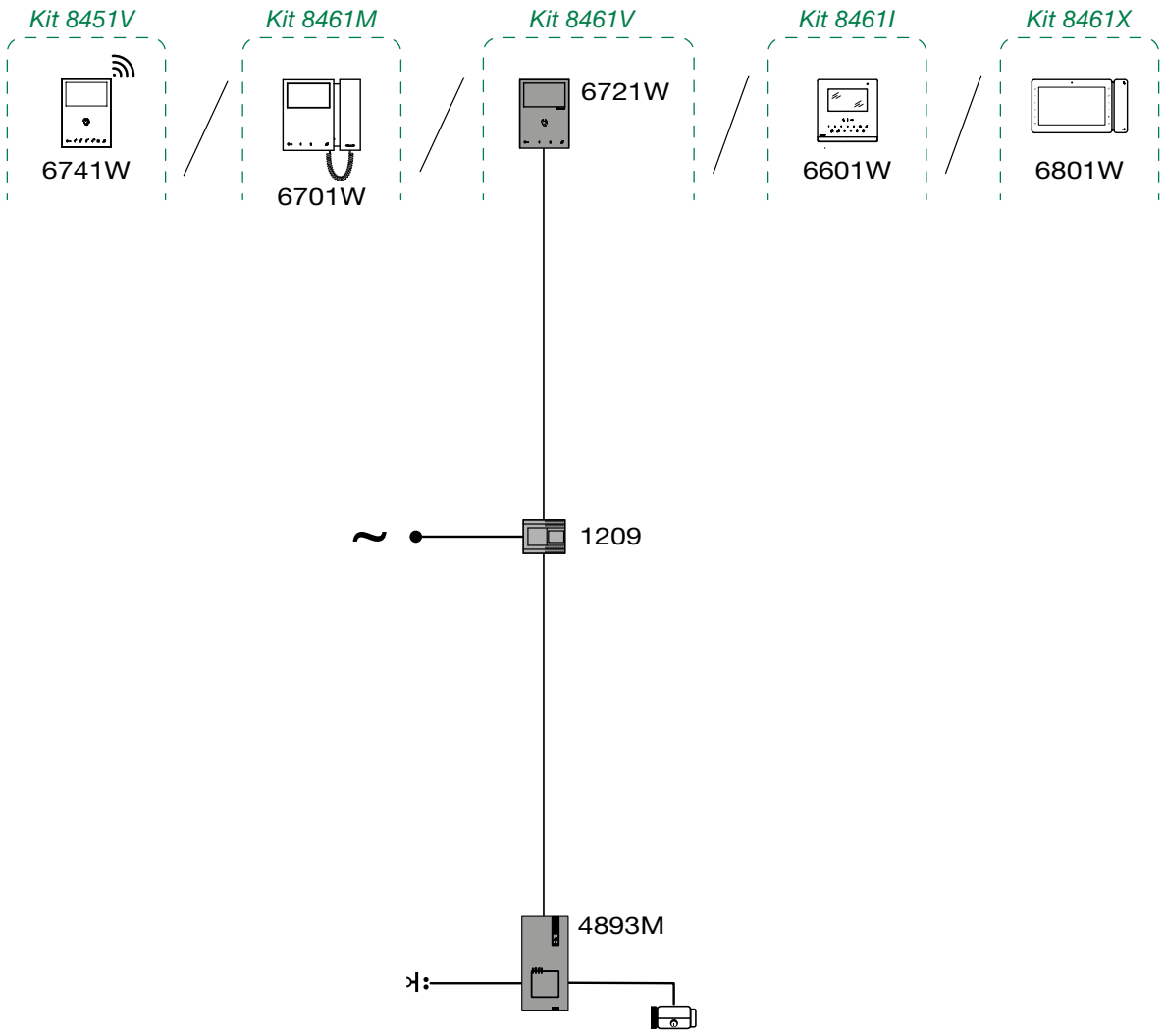

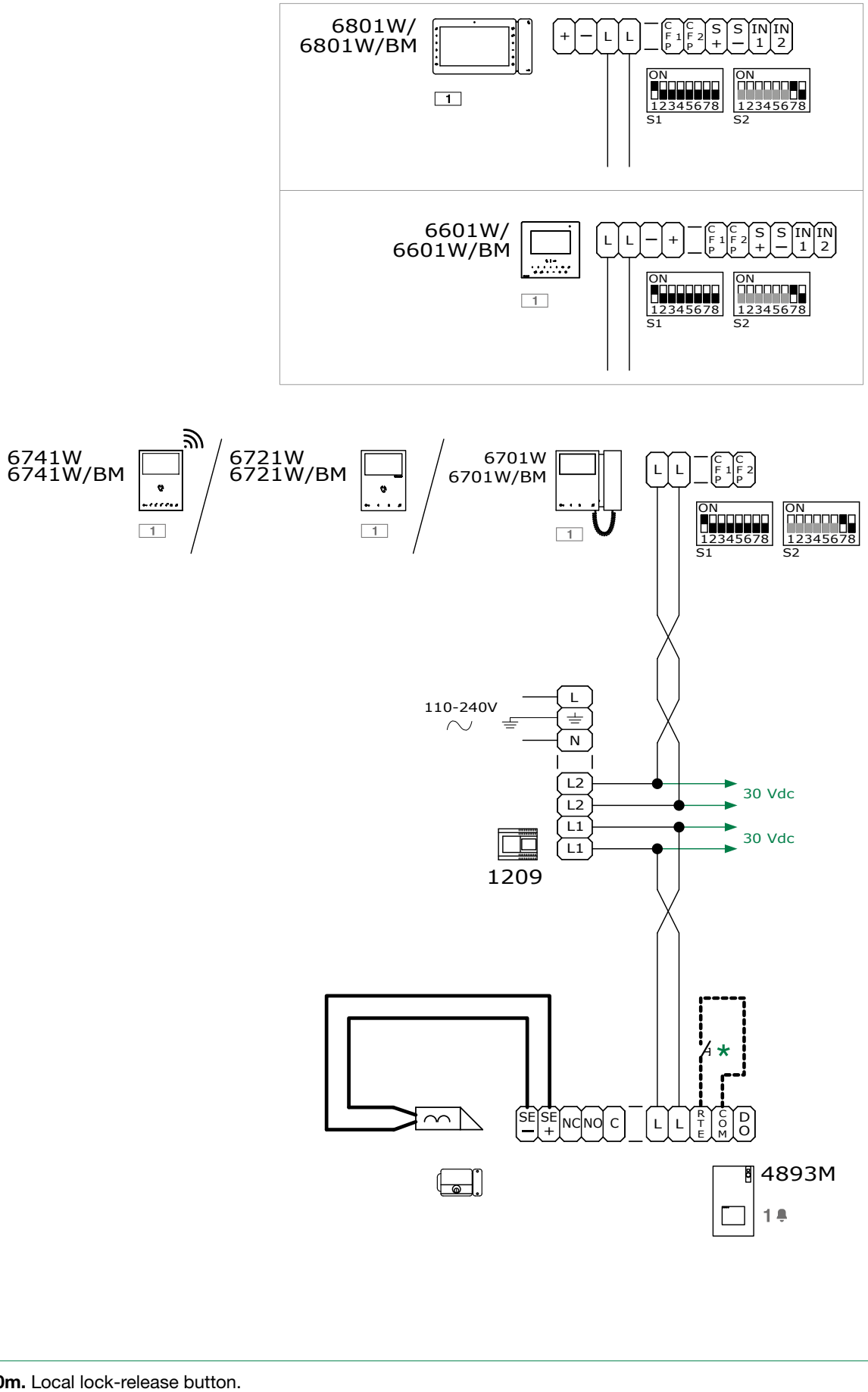

* **Max 20m.** Local lock-release button.

Two-family video entry phone system

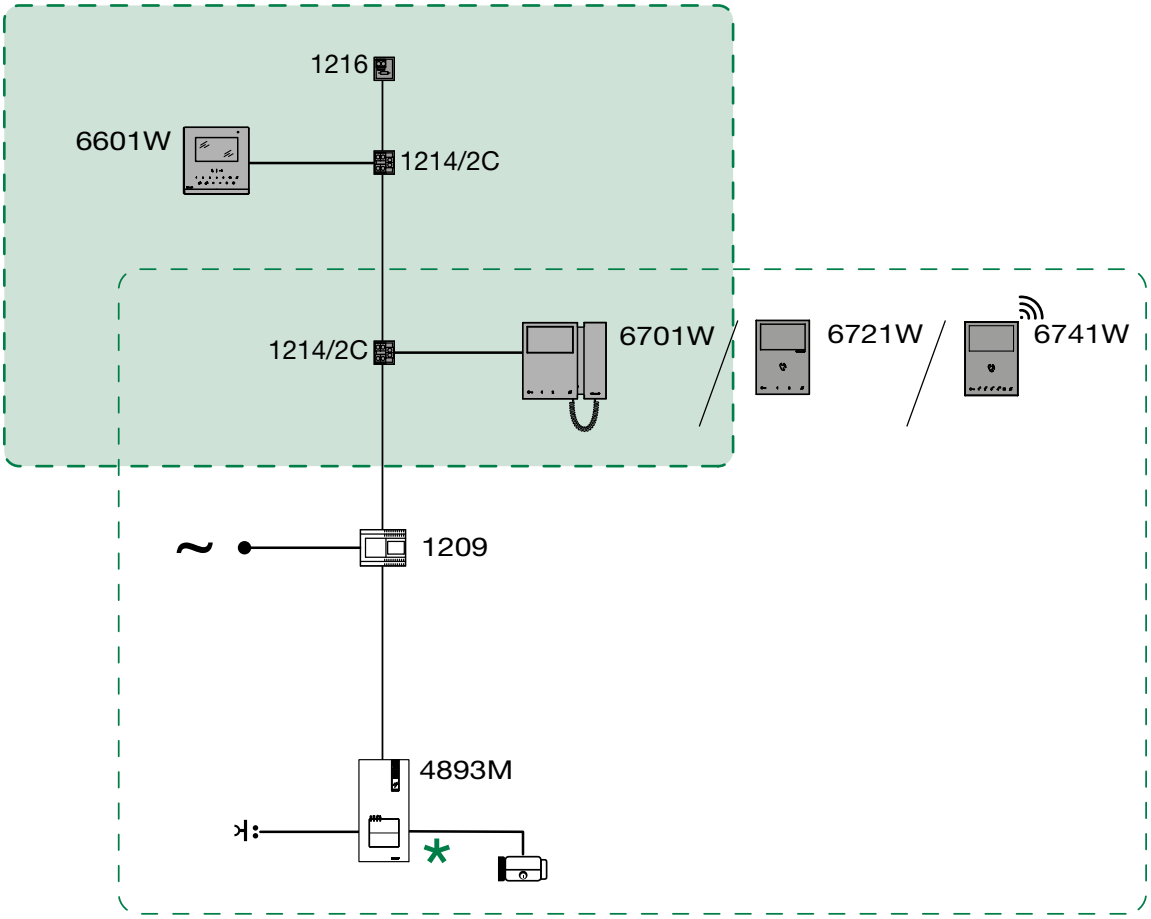

* To program the function “buttons 1-2 enabled with call addresses 1-2” refer to the full manual for 4893M.

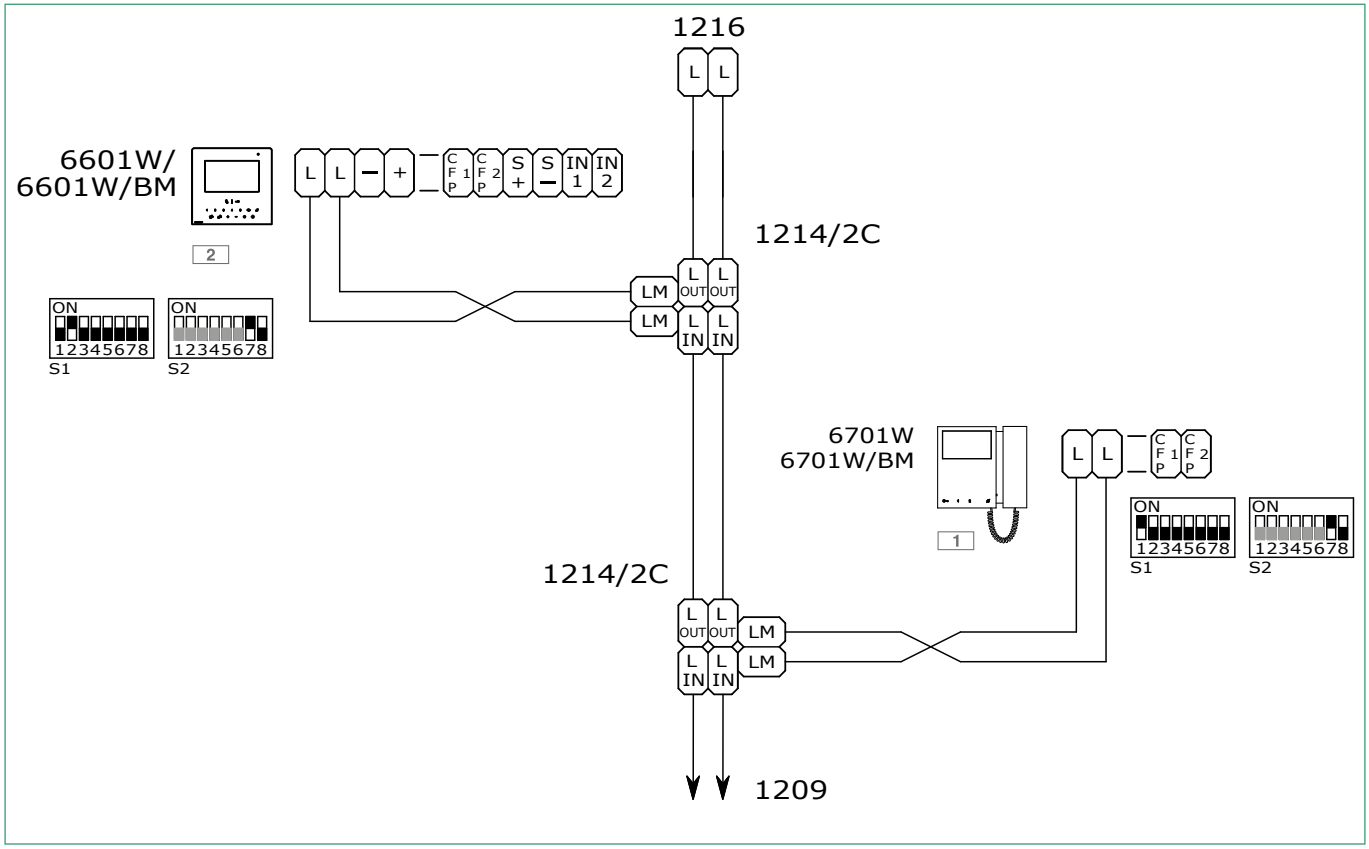

Four-family video entry phone system

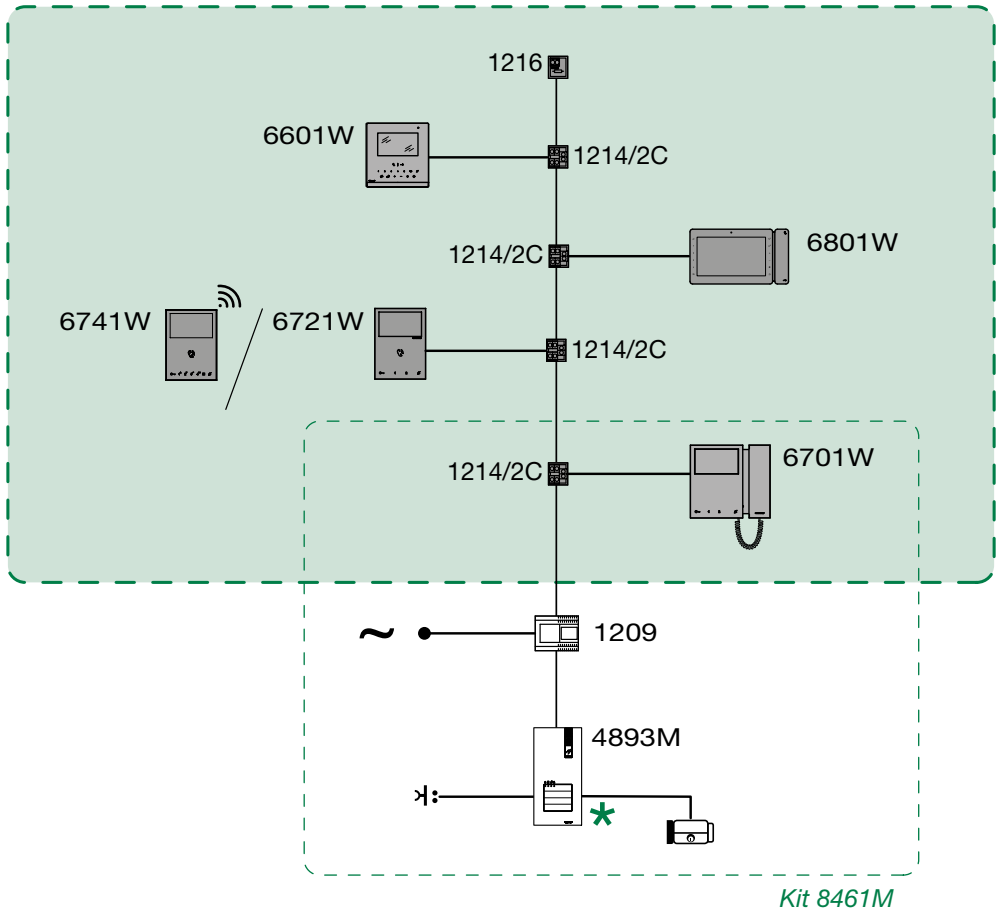

* To program the function “buttons 1-4 enabled with call addresses 1-4” refer to the full manual for 4893M.

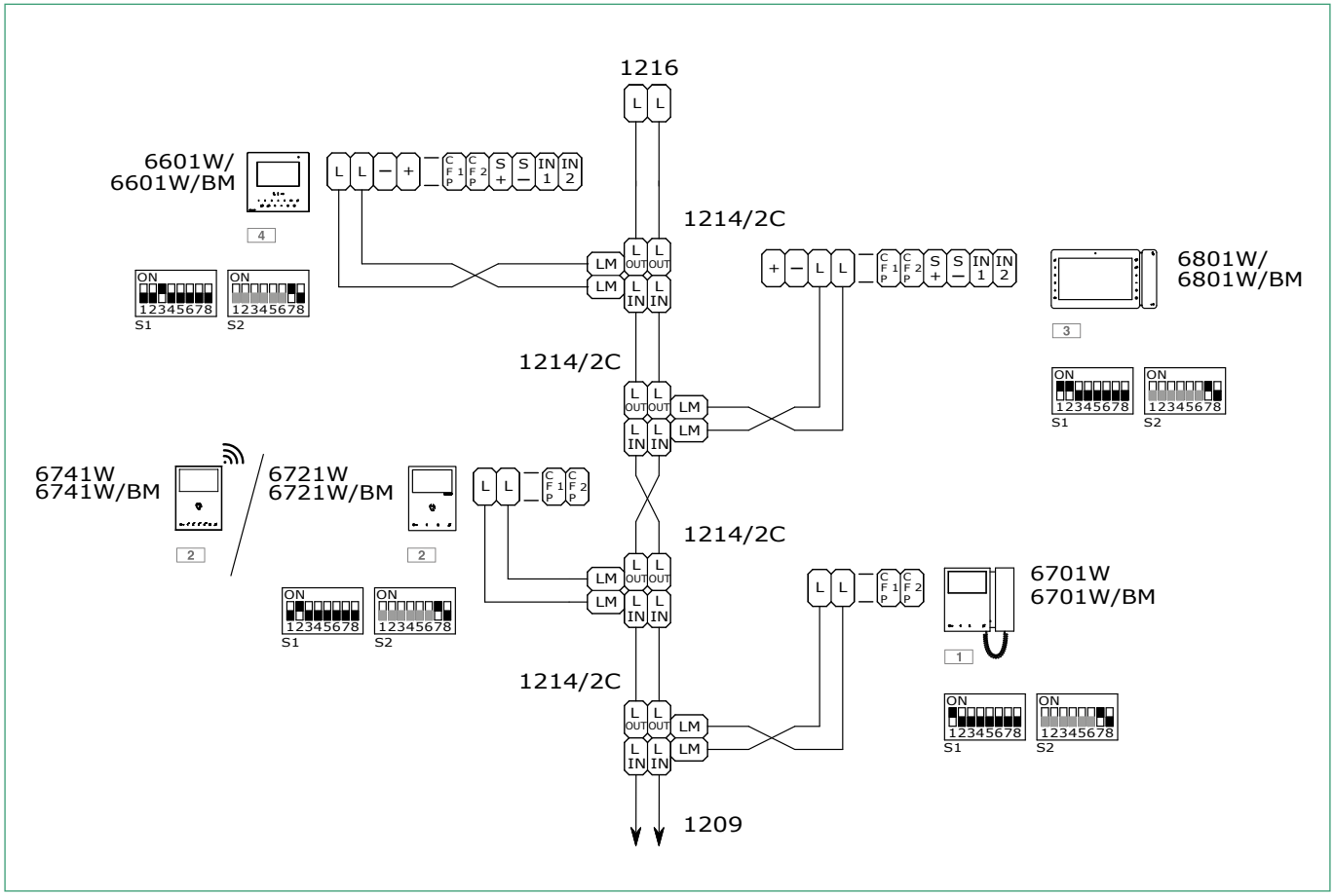

Single-family video entry phone system with second external unit

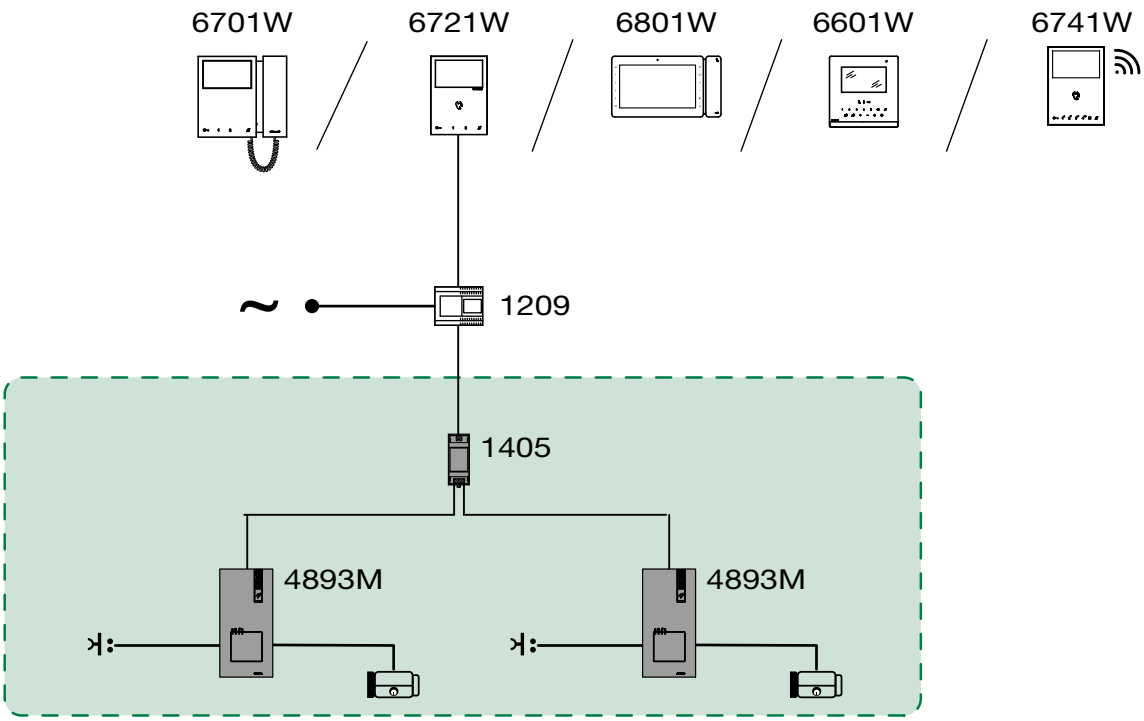

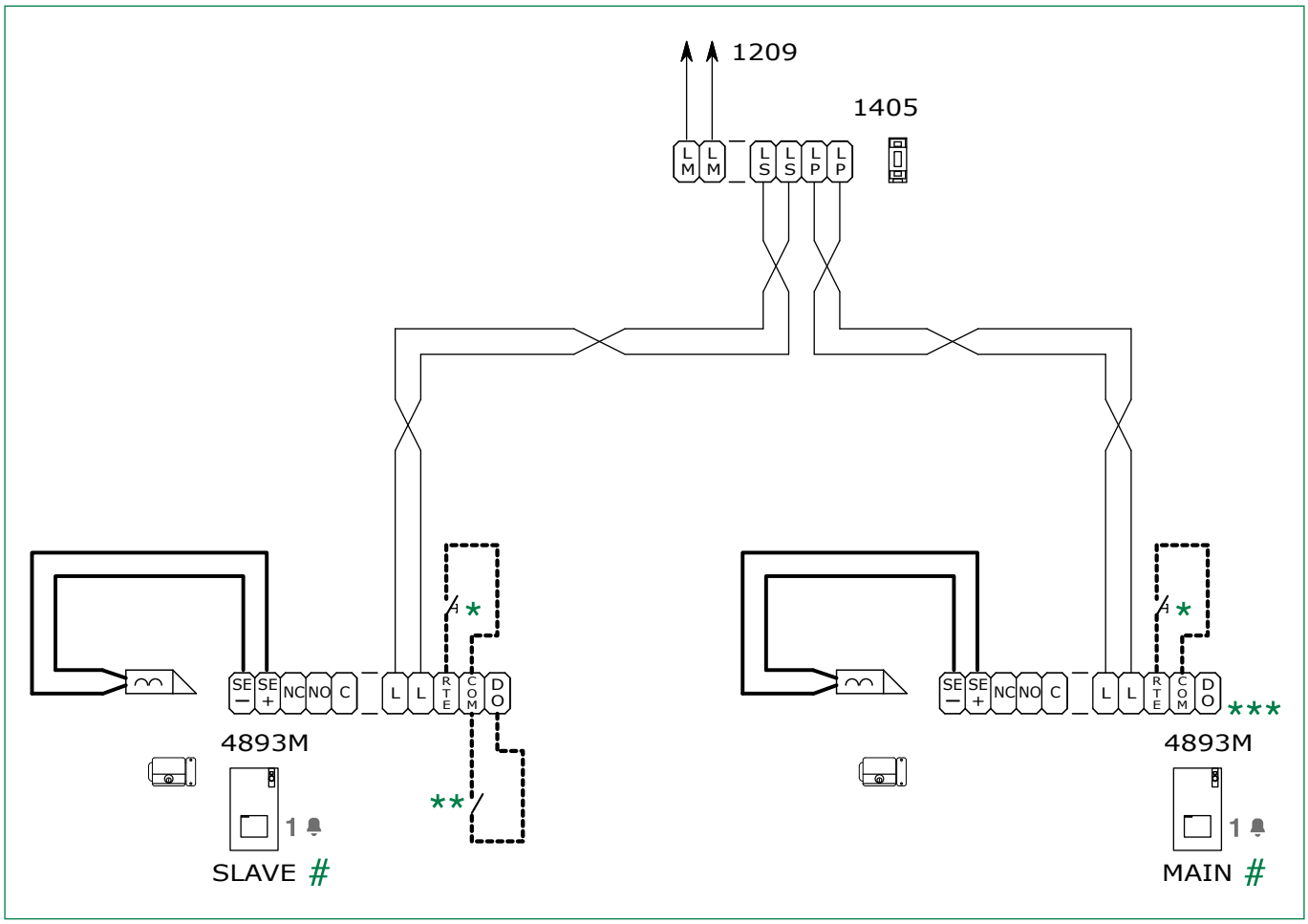

To program the special functions “Main **external unit (Porter)” and “Seco**ndary **external unit (Porter)”** refer to the full manual for 4893M.

* **Max 20m.** Local lock-release button.

** **Max 20m.** N.C. contact for door open indication.

*** Door open indication not available.

Single-family video entry phone system with three external units

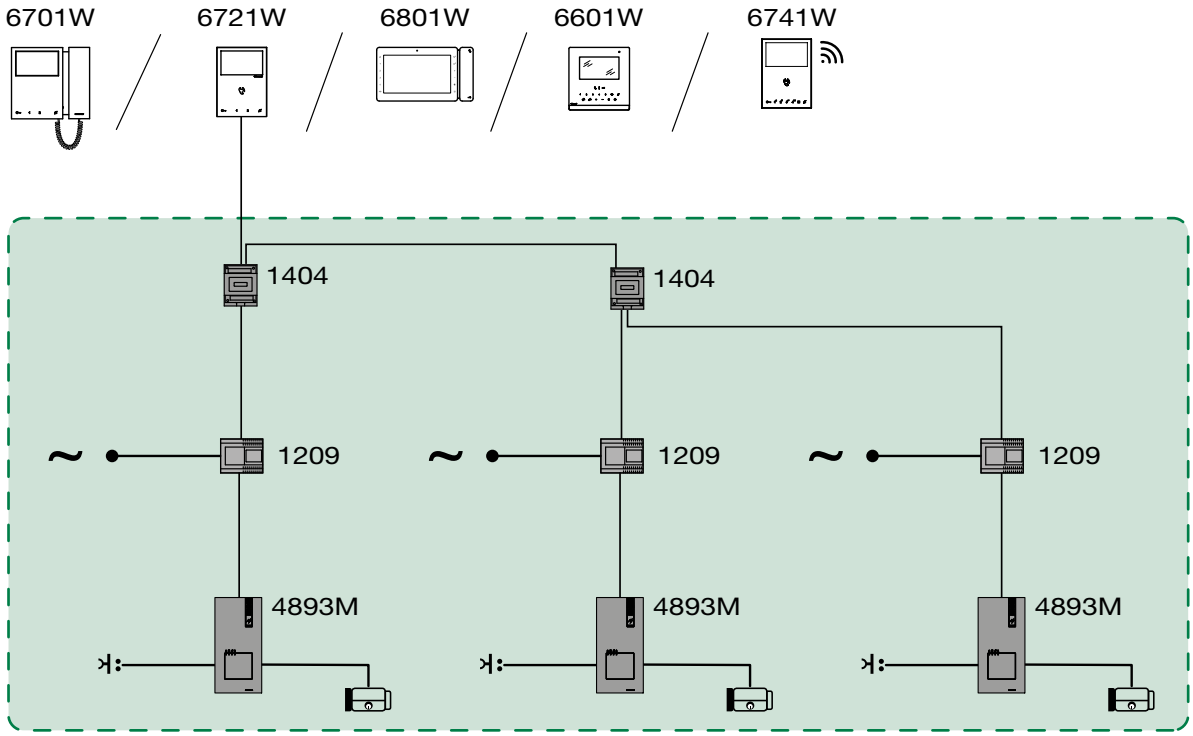

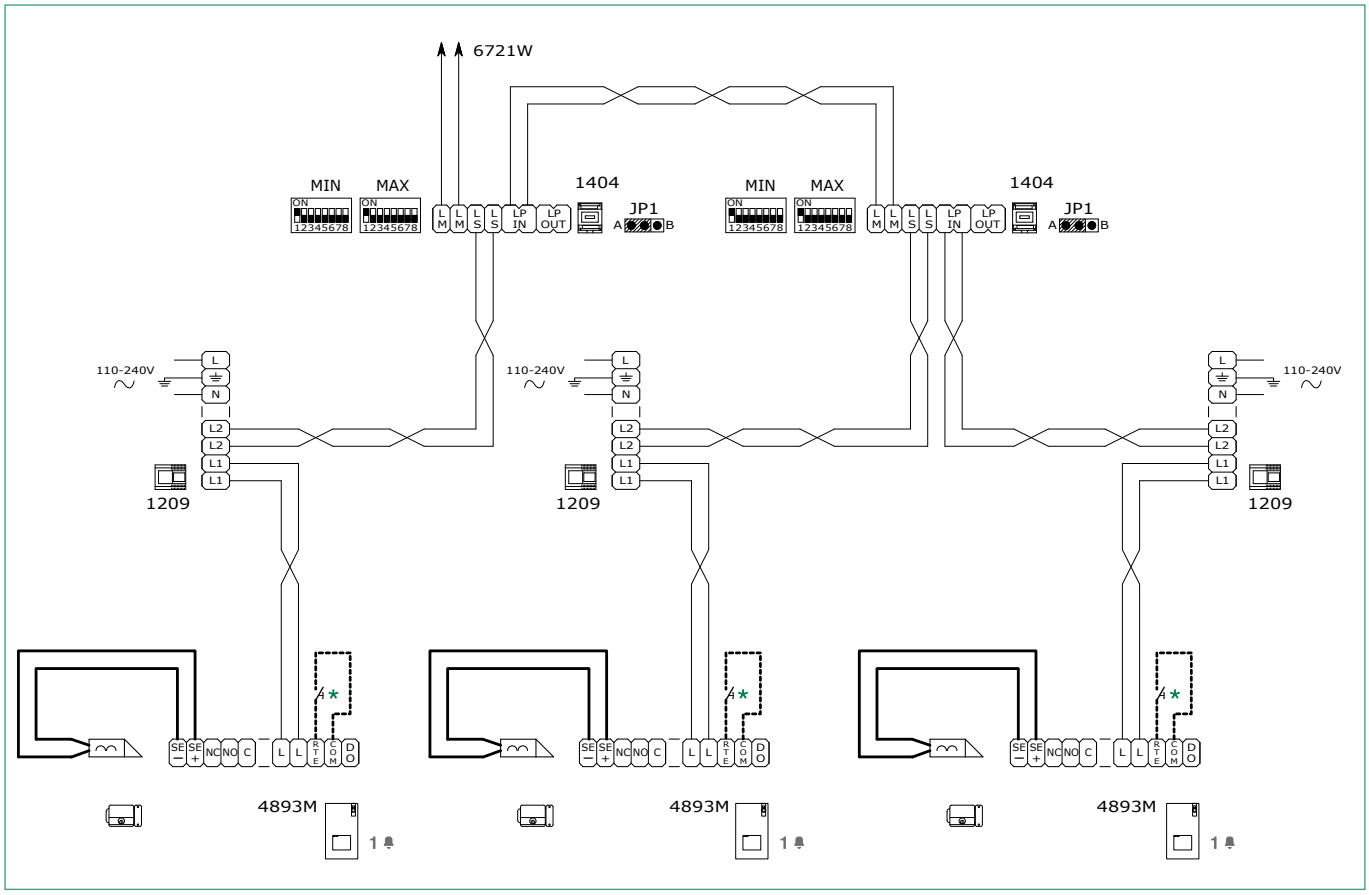

* **Max 20m.** Local lock-release button.

The door open indication function is not available. The self-ignition function is available (with toggle function between 2 external units).

Video entry phone system with two single-family units and main external unit

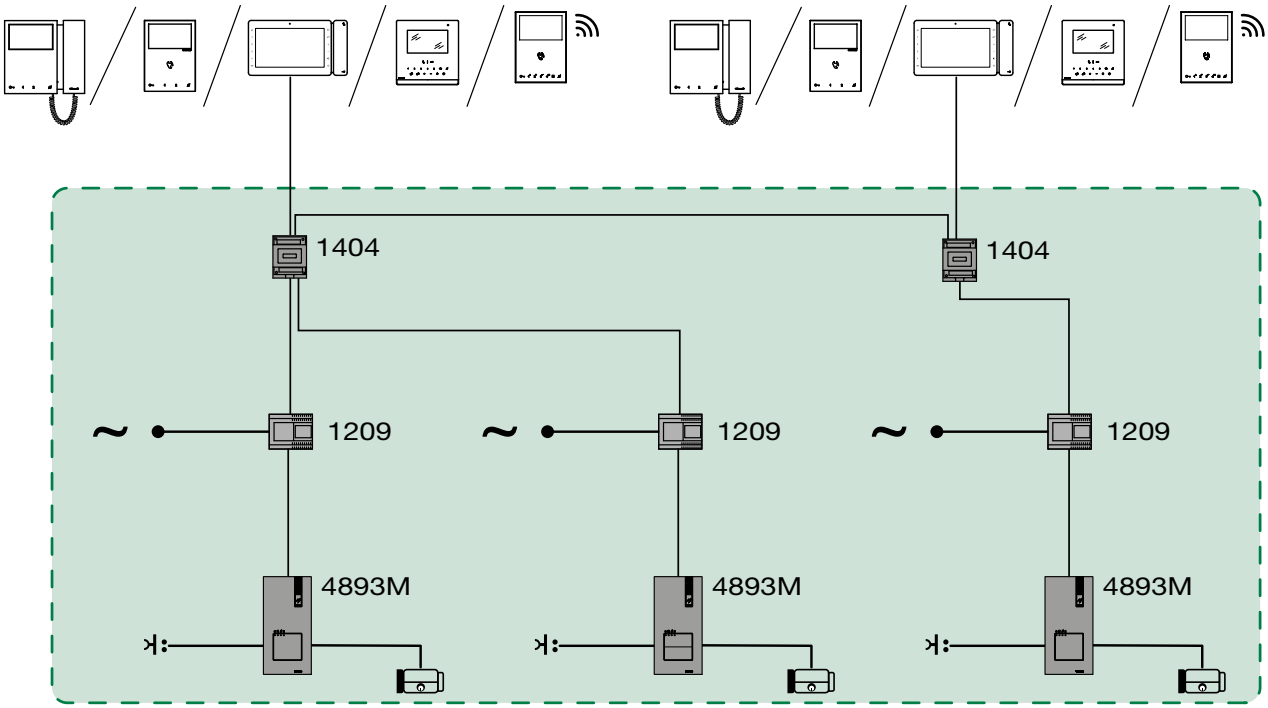

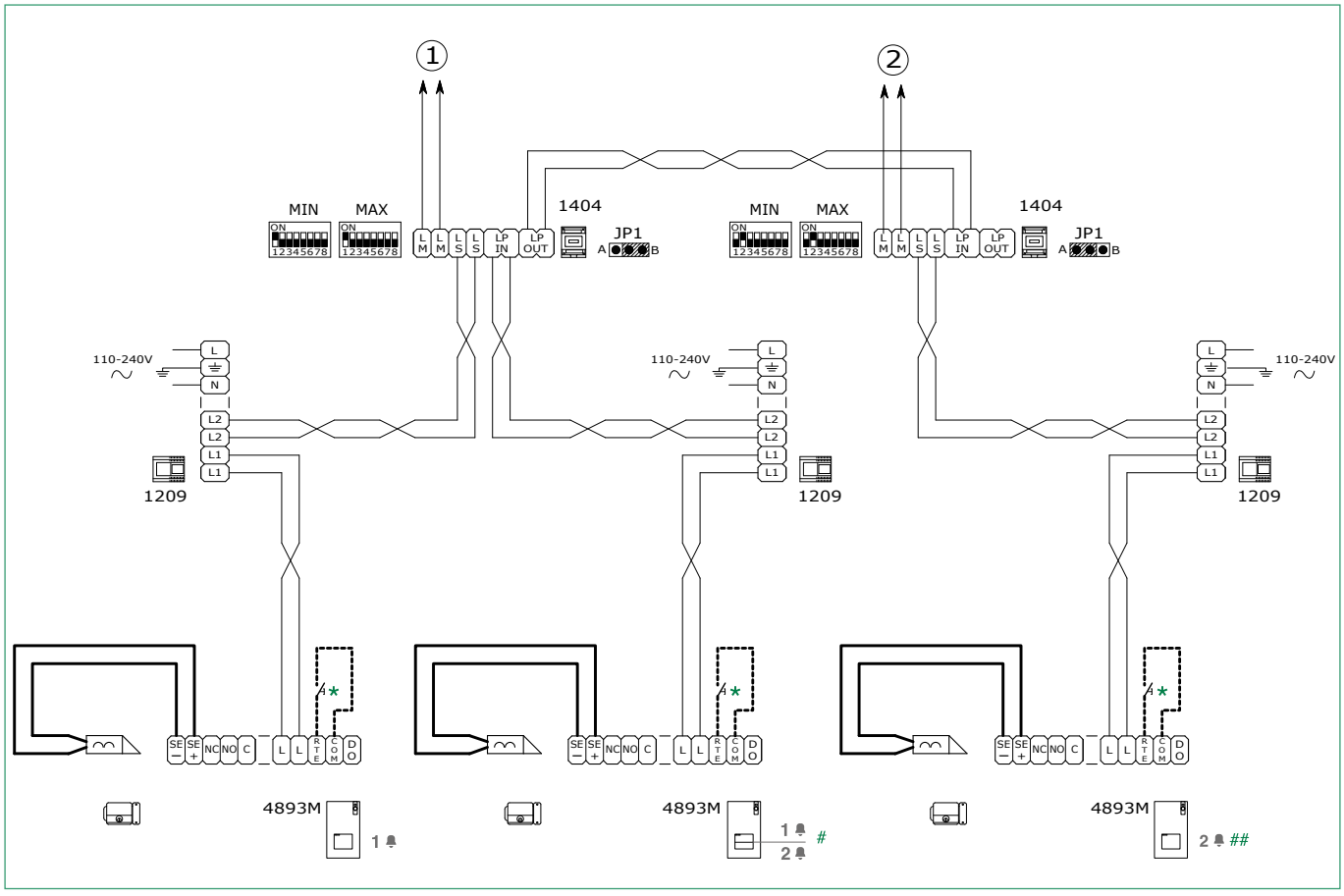

To program the function “buttons 1-2 enabled with call addresses 1-2” refer to the full manual for 4893M.

To program the call address refer to the full manual for 4893M.

✶ **Max 20m.** Local lock-release button.

The door open indication function is not available. The self-ignition function is available (with toggle function between 2 external units).

Variants: additional 2 secondary monitors in cascade connection

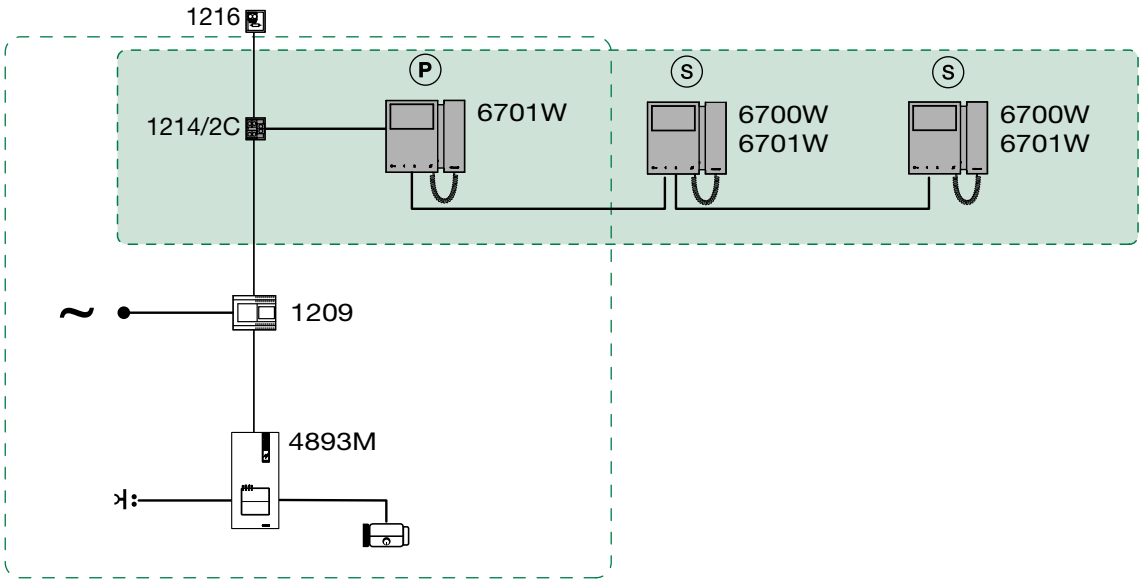

Kit 8461M

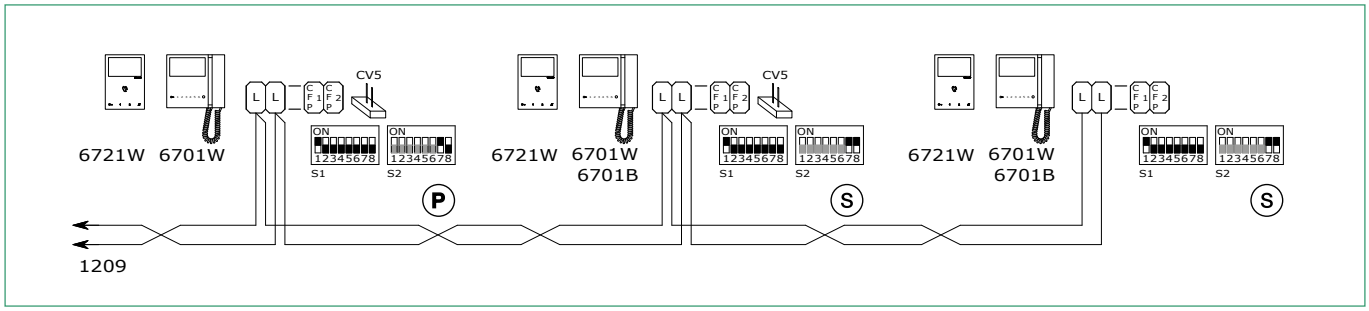

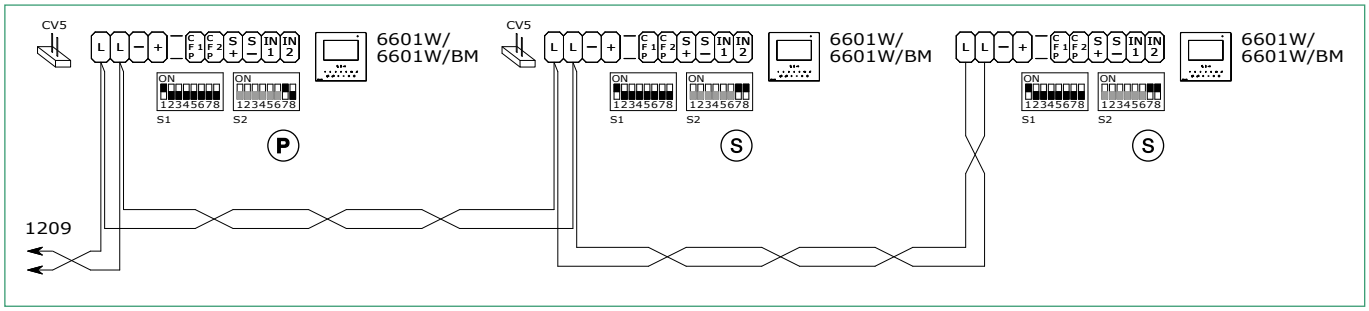

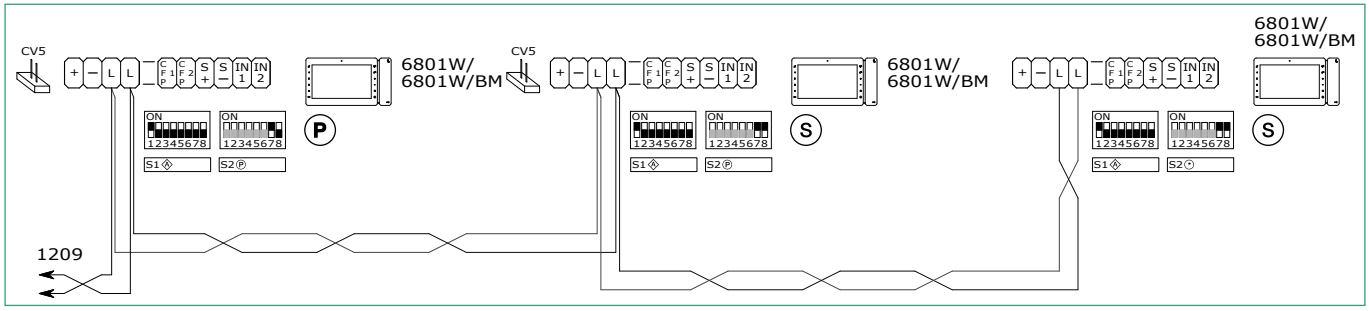

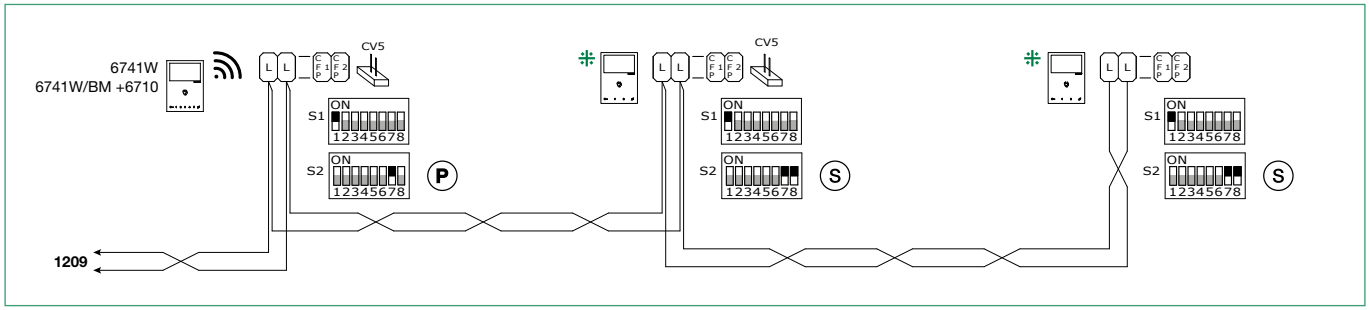

⁜ Compatible secondary monitors

Connection of main monitor with local power supply

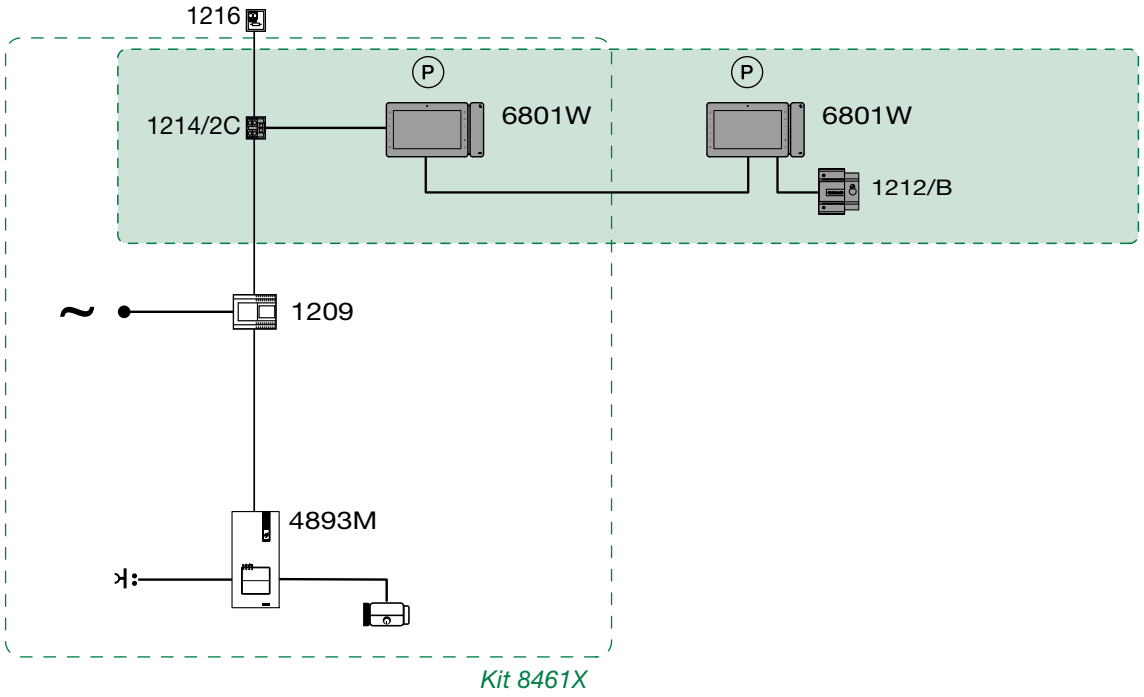

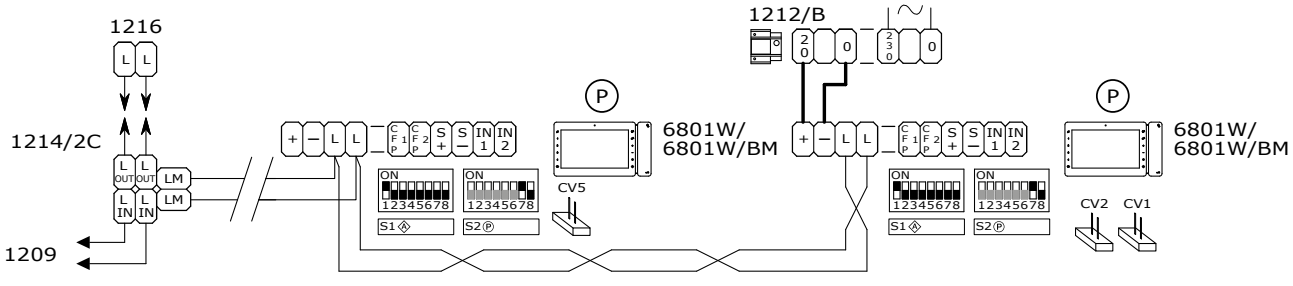

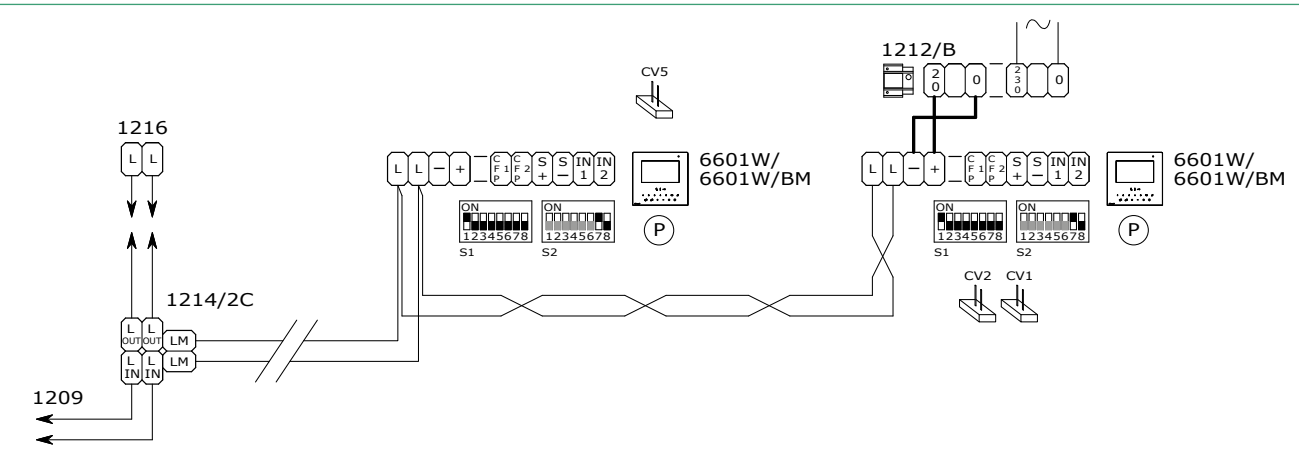

Variants: addition of branched secondary monitor

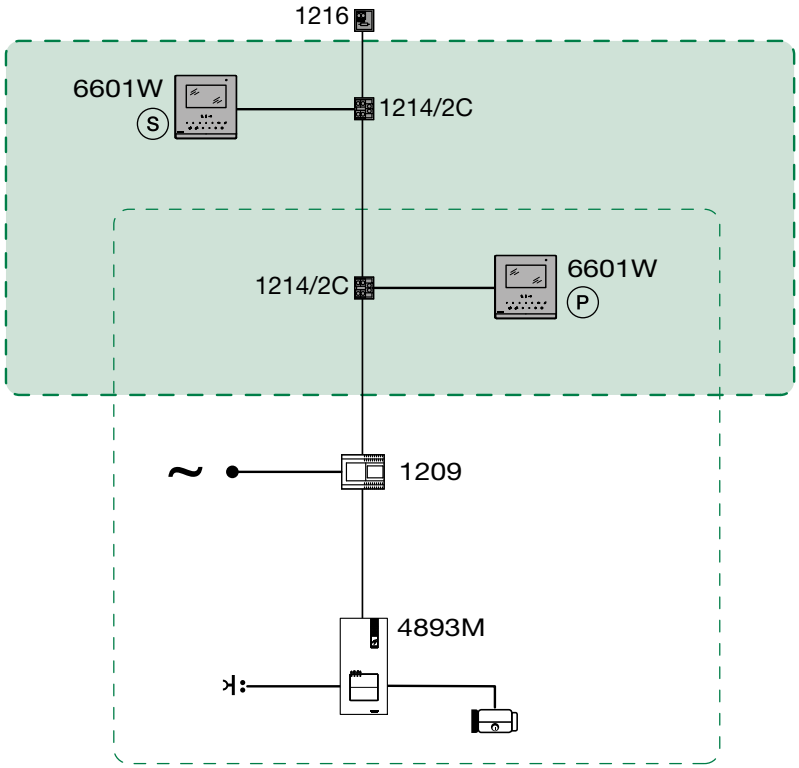

Kit 8461I

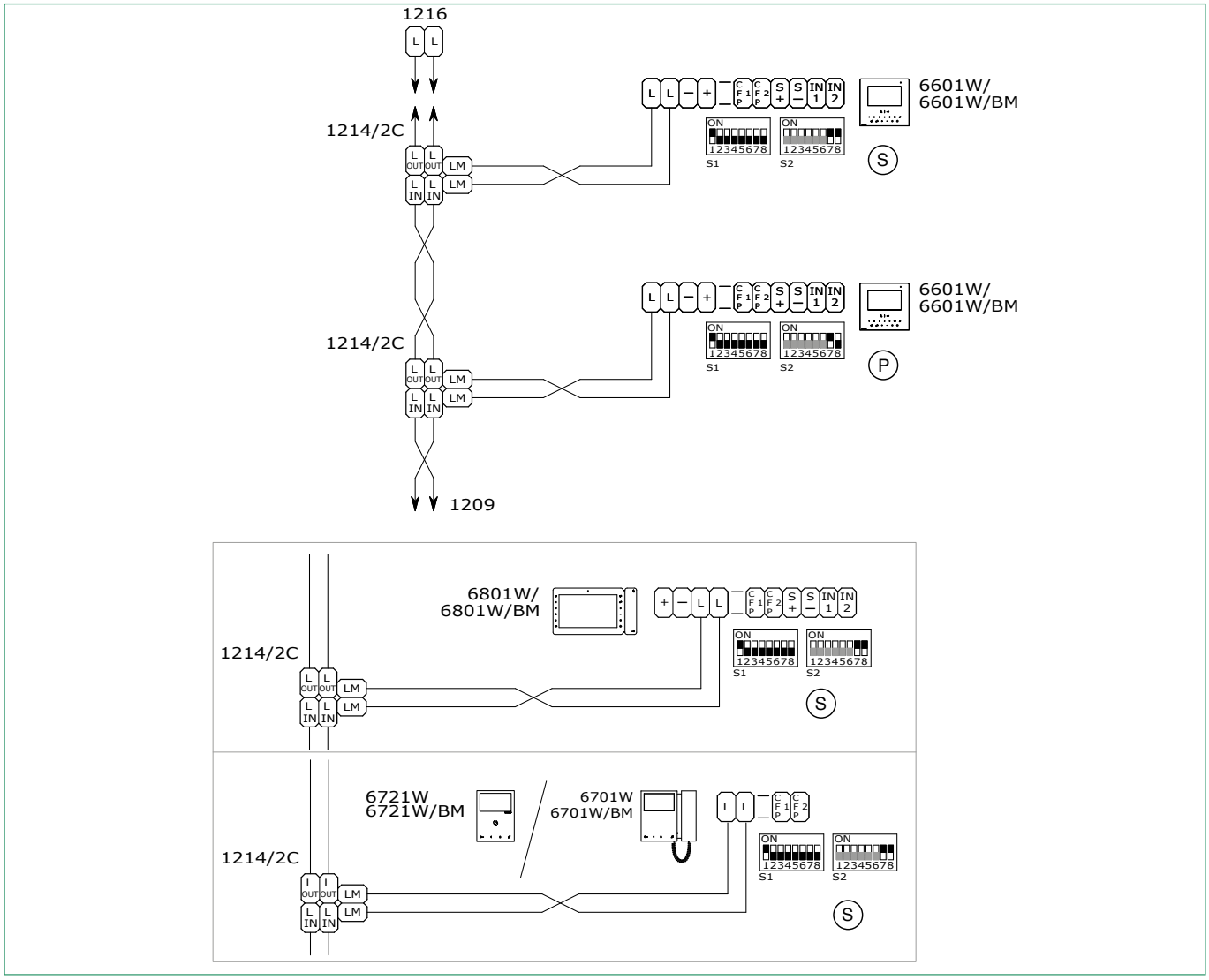

Use of actuator relay Art. 1256

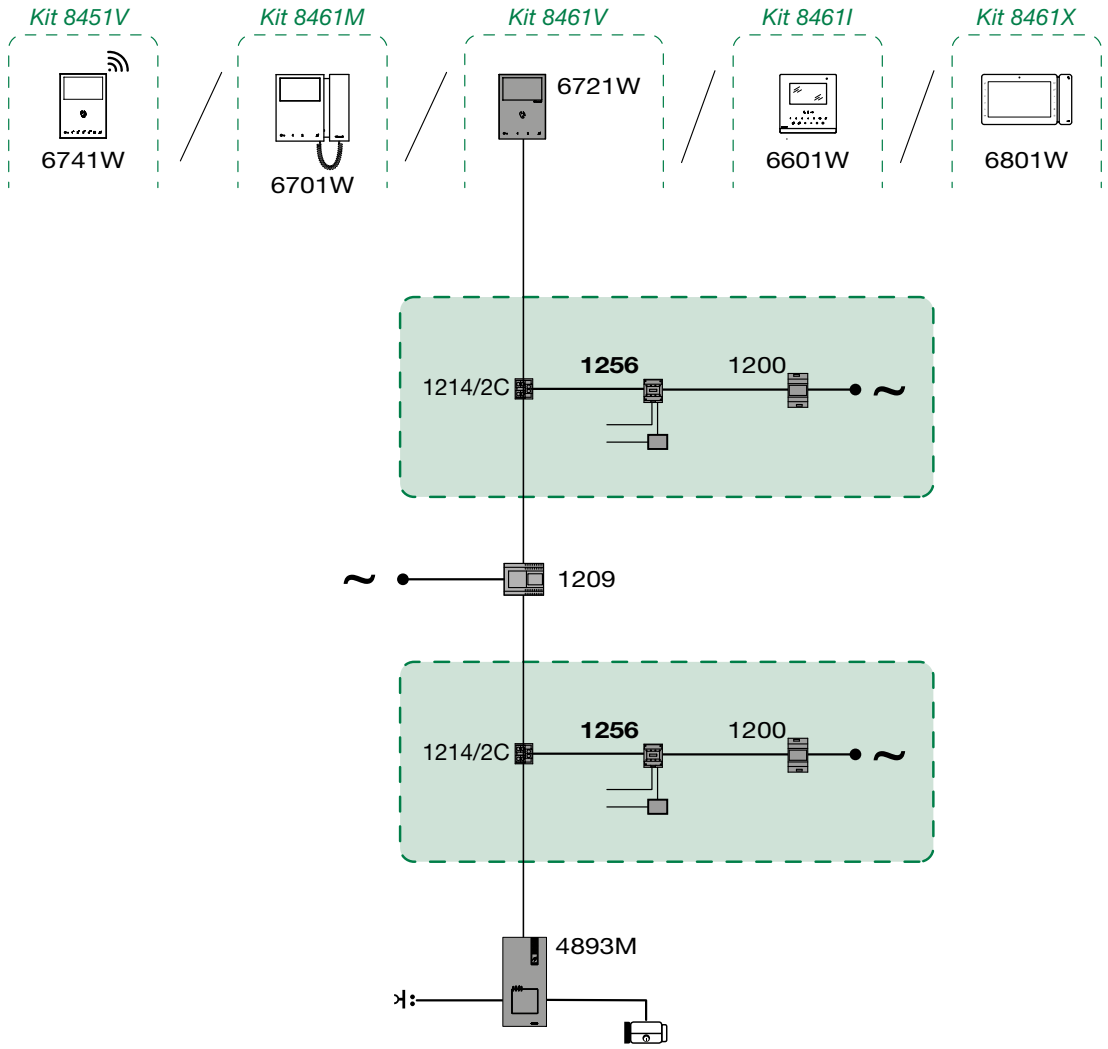

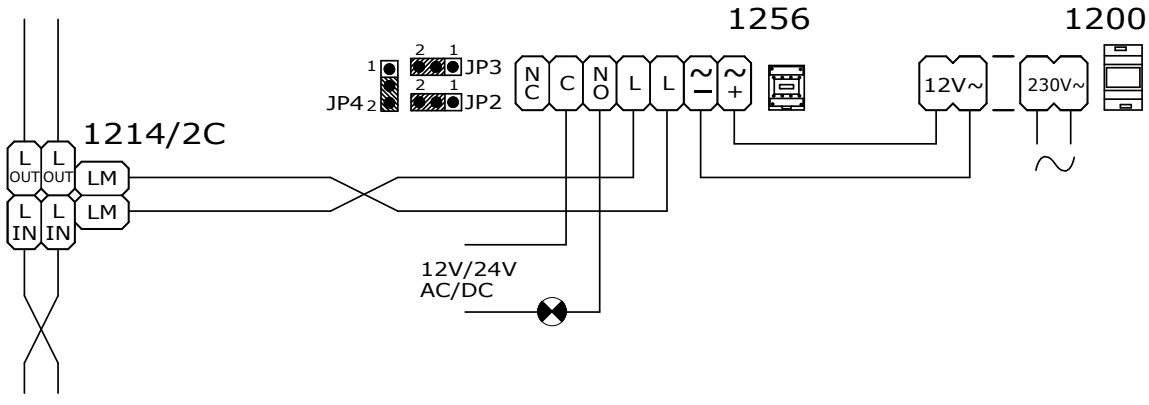

Use of remote camera module Art. 1409

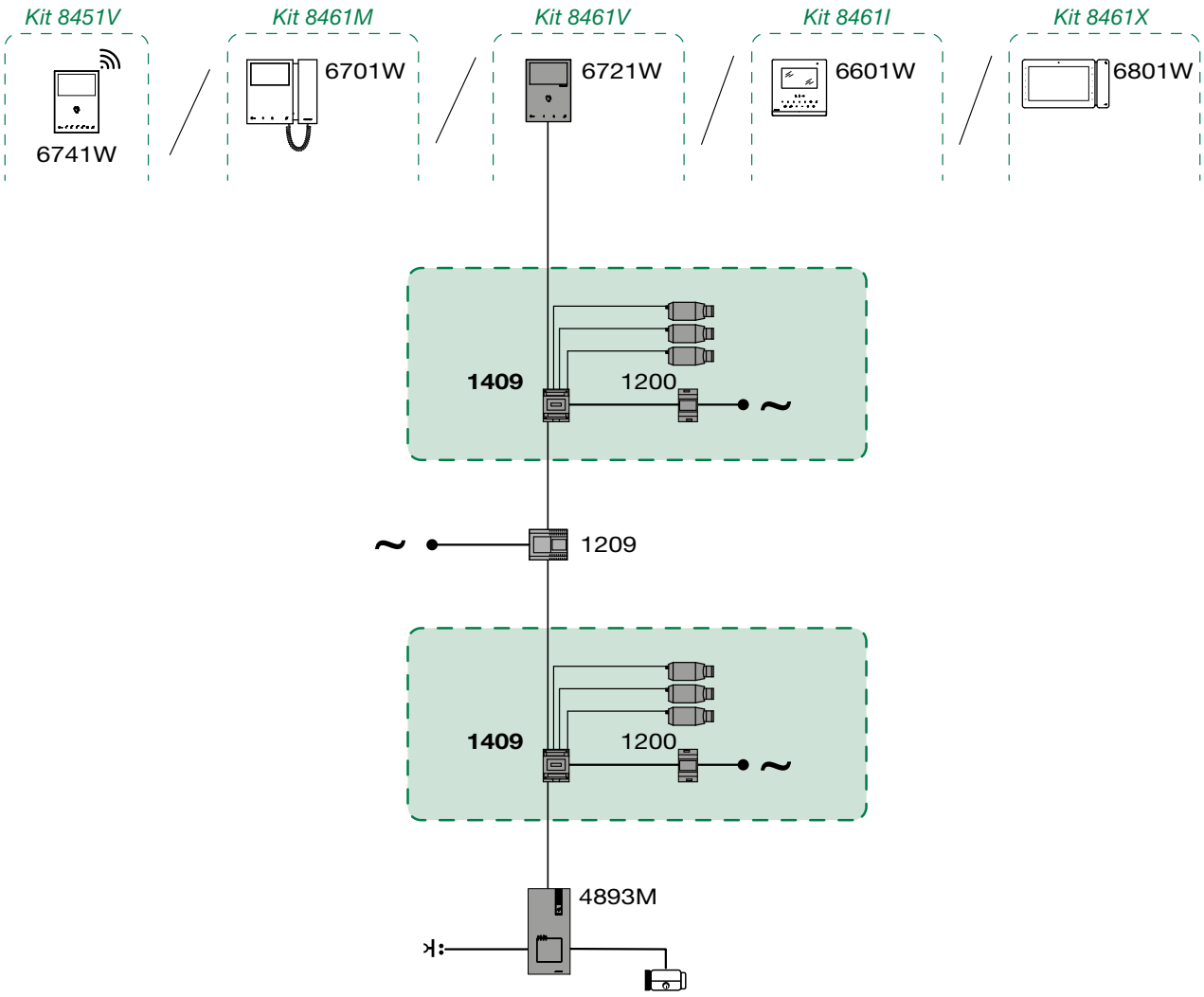

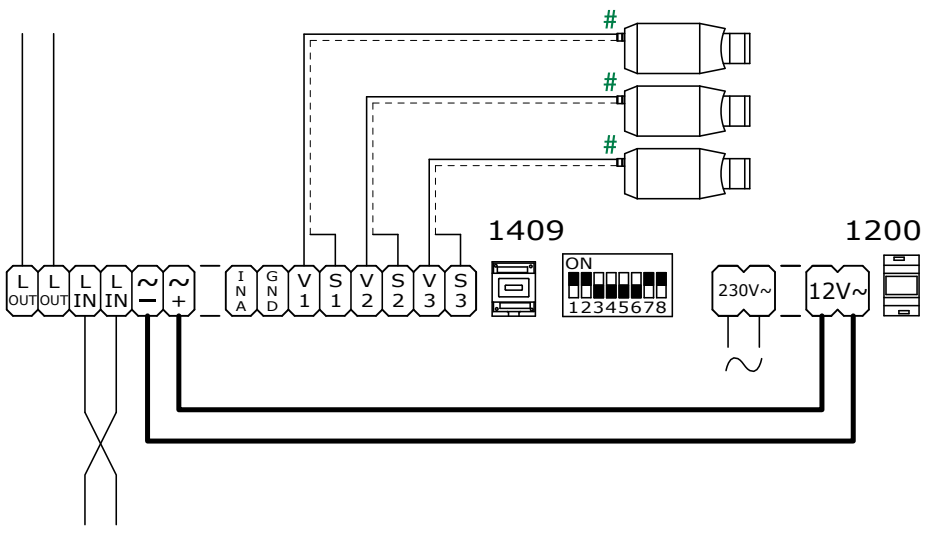

Requires separate power supply.

Use of additional bell Art.1229A

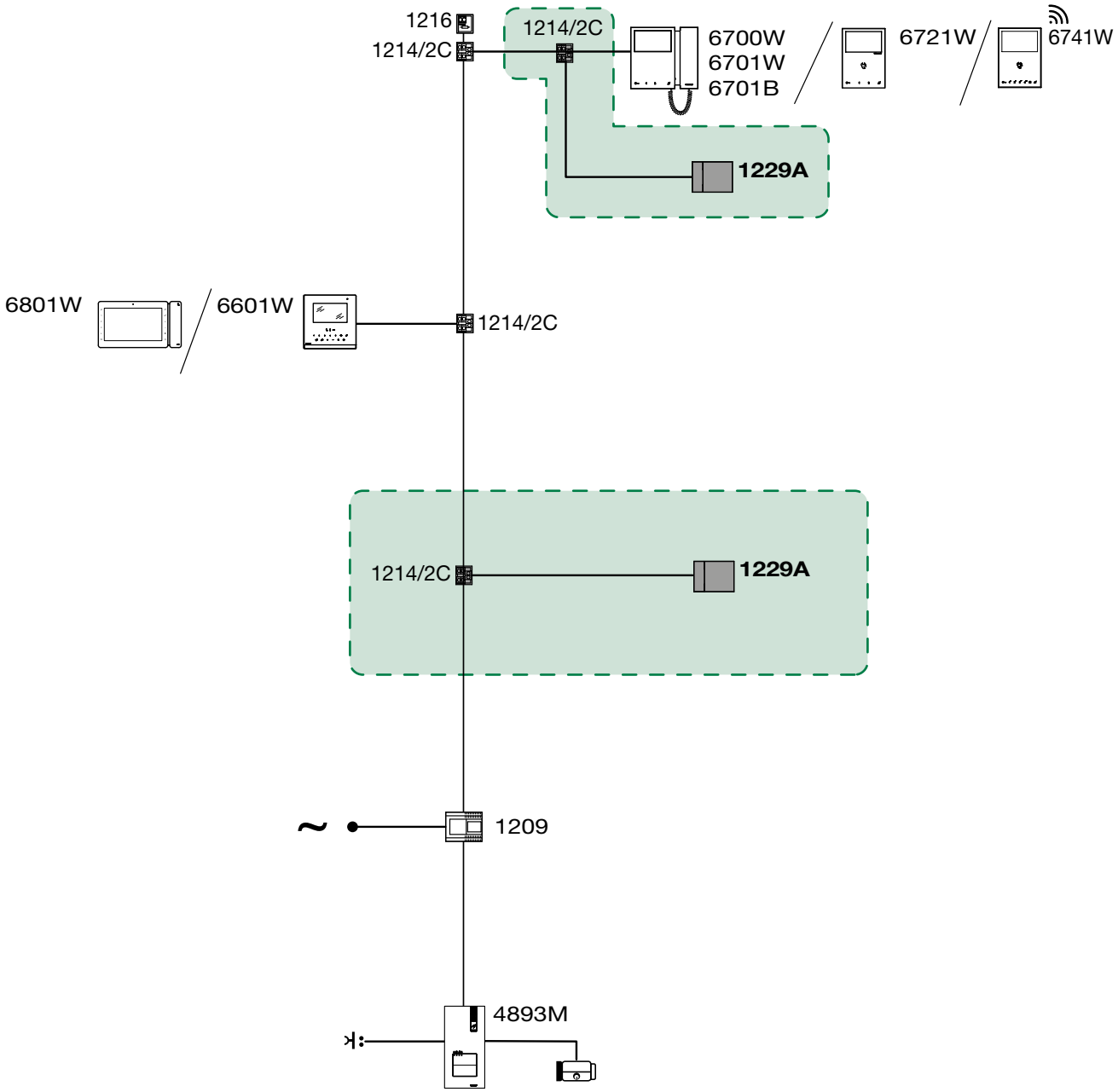

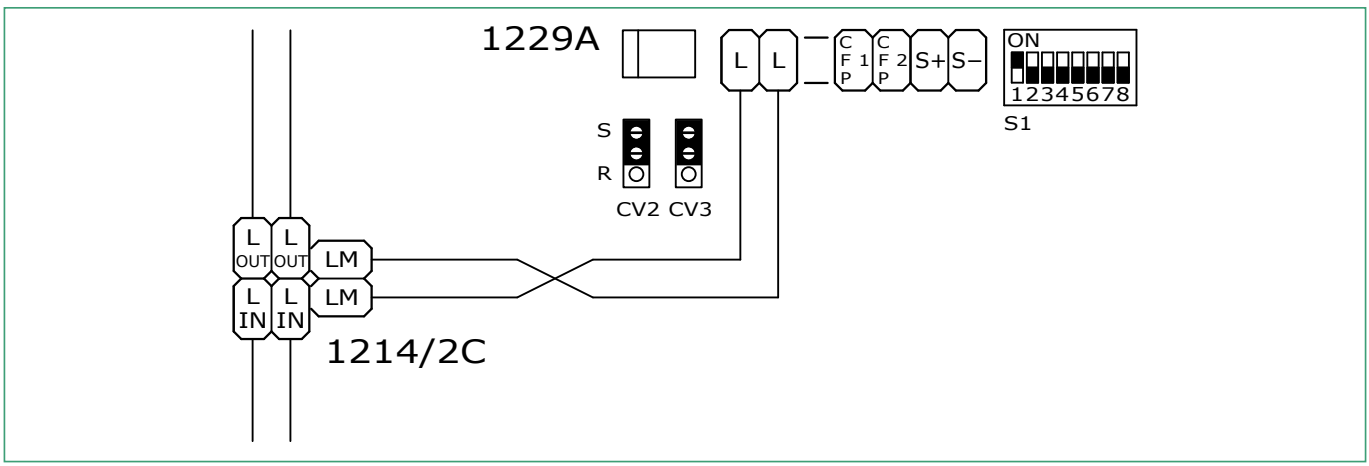

Table of contents

Warning

System performance 57

Distances valid for articles: 6700W, 6701W(/BM), 6701B(/BM), 6721W(/BM), 6801W(/BM), 6741W(/BM) 58

Distances valid for Art. 6601W(/BM) 58

Distances with video distributor 4840 59

Maximum system expansion 60

Maximum expansion per apartment 60

Example of maximum expansion per apartment 61

Wiring diagrams 62

System with a single riser 62

Variant with Digital External Unit 63

System with a single riser with two entrances, one of which is audio .. 64

System with 2 main entrances in TOP mode and 3 risers, 2 of which are equipped with a secondary external unit 65

System with a 2 risers, one main entrance and n secondary entrances .. 68

System with n single-family units and 1 main external unit (connection in cascade) 69

System with n single-family units and 1 main external unit (branch connection) 70

System with n single-family units and a main external unit in TOP mode (connection in cascade) 72

System with video distribution unit, 2 risers and 1 external unit 73

System with video distribution unit, 2 single-family units and a main external unit 74

Use of actuator relay Art. 1256 76

Use of remote camera module Art. 1409 77

Use of additional bell Art. 1229A 78

System performance

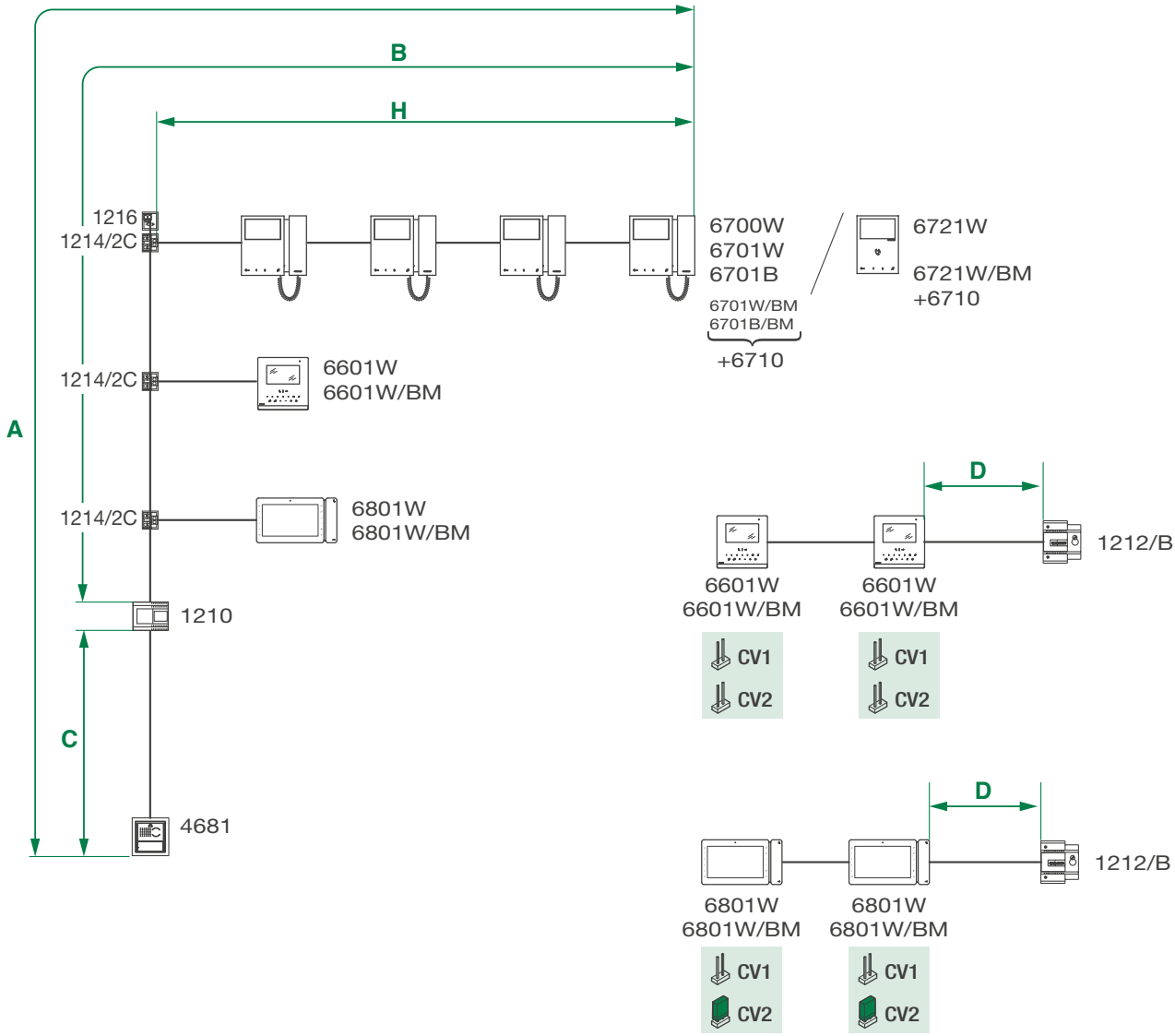

KIT MODE

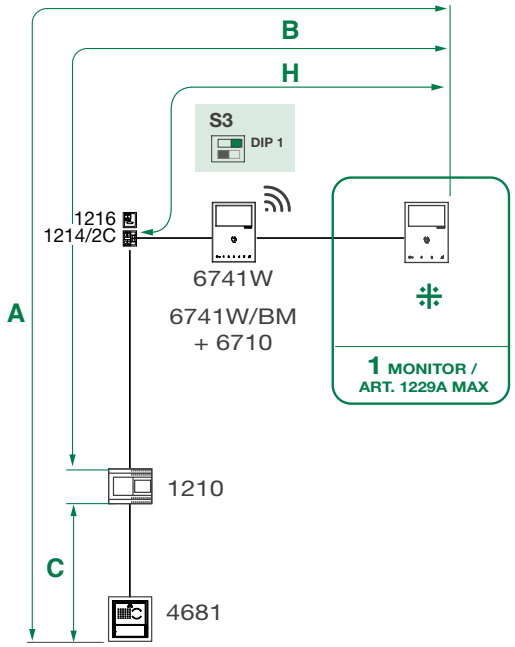

BUILDING MODE:

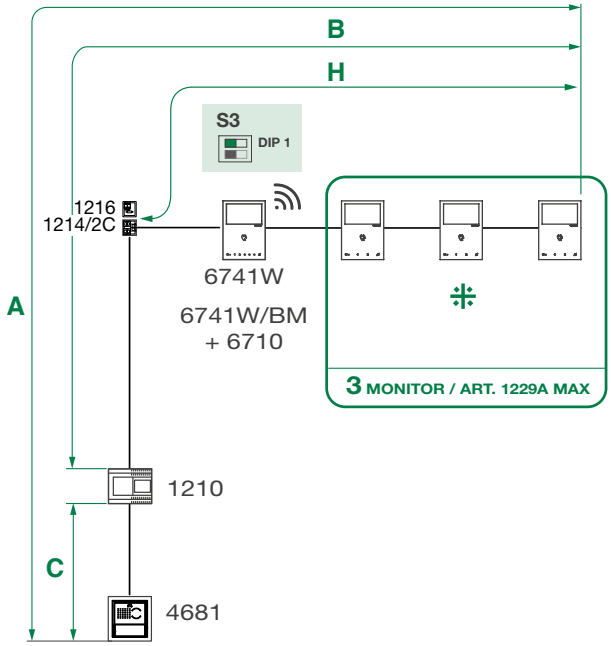

⁜ Compatible secondary monitors: 6700W, 6701W (/BM), 6701B (/BM), 6721W (/BM), 6801W (/BM), 6601(/BM)

Distances valid for articles: 6700W, 6701W(/BM), 6701B(/BM), 6721W(/BM), 6801W(/BM), 6741W(/BM)

	A MAX	B MAX	C MAX	H MAX	D MAX	Art. 1216
Comelit Art. 4577/4579 1 mm² (Ø 1,2 mm AWG 17)	**260 m** (850 feet)	**130 m** (425 feet)	**130 m** (425 feet)	**50 m** (164 feet)	**100 m** (328 feet)	
UTP5 cat. 5 0,2 mm² (Ø 0,5 mm AWG 24)	**80 m** (260 feet)	**40 m** (130 feet)	**40 m** (130 feet)	**30 m** (98 feet)	/	
0,28 mm² (Ø 0,6 mm AWG 23)	**100 m** (328 feet)	**50 m** (164 feet)	**50 m** (164 feet)	**30 m** (98 feet)	**10 m** (32,5 feet)	
0,5 mm² (Ø 0,8 mm AWG 20)	**140 m** (460 feet)	**70 m** (230 feet)	**70 m** (230 feet)	**30 m** (98 feet)	**25 m** (82 feet)	
1 mm² (Ø 1,2 mm AWG 17)	**200 m** (656 feet)	**100 m** (328 feet)	**100 m** (328 feet)	**40 m** (130 feet)	**50 m** (164 feet)	
1,5 mm² (Ø 1,4 mm AWG 15)	**80 m** (260 feet)	**40 m** (130 feet)	**40 m** (130 feet)	**30 m** (98 feet)	**100 m** (328 feet)	
UTP5 cat. 5 0,2 mm² (Ø 0,5 mm AWG 24) MULTI PAIR CABLE ⁜ 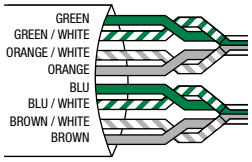	**260 m** (850 feet)	**130 m** (425 feet)	**130 m** (425 feet)	**50 m** (164 feet)	/	

Distances valid for Art. 6601W(/BM)

	A MAX	B MAX	C MAX	H MAX	D MAX	Art. 1216
Comelit Art. 4577/4579 1 mm² (Ø 1,2 mm AWG 17)	**160 m** (525 feet)	**70 m** (230 feet)	**90 m** (295 feet)	**30 m** (98 feet)	**100 m** (328 feet)	
UTP5 cat. 5 0,2 mm² (Ø 0,5 mm AWG 24)	**80 m** (263 feet)	**40 m** (130 feet)	**40 m** (130 feet)	**30 m** (98 feet)	/	
0,28 mm² (Ø 0,6 mm AWG 23)	**90 m** (295 feet)	**40 m** (130 feet)	**50 m** (164 feet)	**30 m** (98 feet)	**10 m** (32,5 feet)	
0,5 mm² (Ø 0,8 mm AWG 20)	**110 m** (360 feet)	**50 m** (164 feet)	**60 m** (197 feet)	**30 m** (98 feet)	**25 m** (82 feet)	
1 mm² (Ø 1,2 mm AWG 17)	**140 m** (460 feet)	**70 m** (230 feet)	**70 m** (230 feet)	**30 m** (98 feet)	**50 m** (164 feet)	
1,5 mm² (Ø 1,4 mm AWG 15)	**60 m** (197 feet)	**30 m** (98 feet)	**30 m** (98 feet)	**30 m** (98 feet)	**100 m** (328 feet)	
UTP5 cat. 5 0,2 mm² (Ø 0,5 mm AWG 24) MULTI PAIR CABLE ⁜ 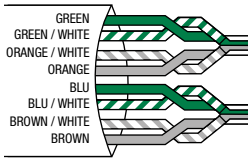	**240 m** (786 feet)	**120 m** (393 feet)	**120 m** (393 feet)	**60 m** (197 feet)	/	

⁜ UTP cable with multi-cable connection: FOLLOW THE COLOURS SHOWN IN THE DIAGRAM!

Distances with video distributor 4840

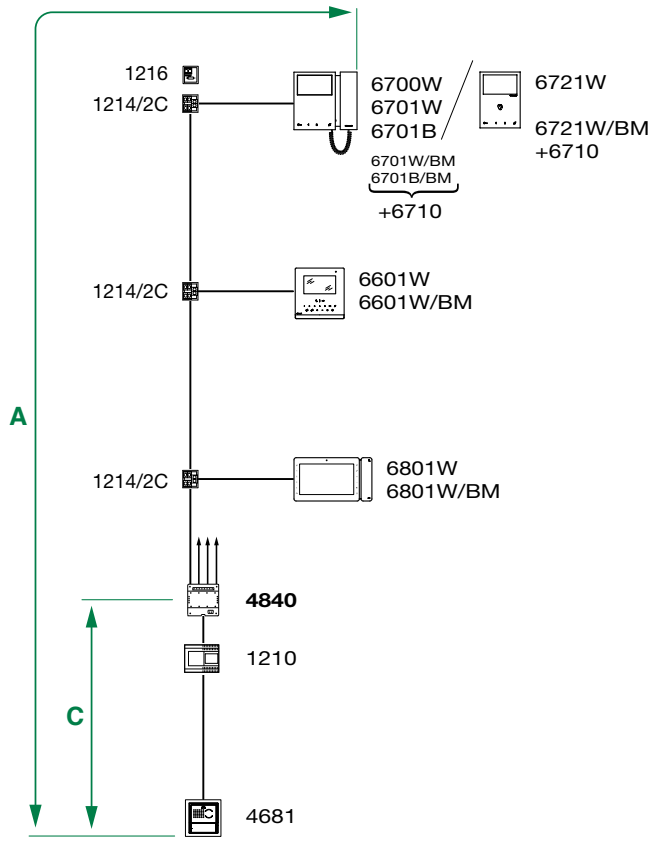

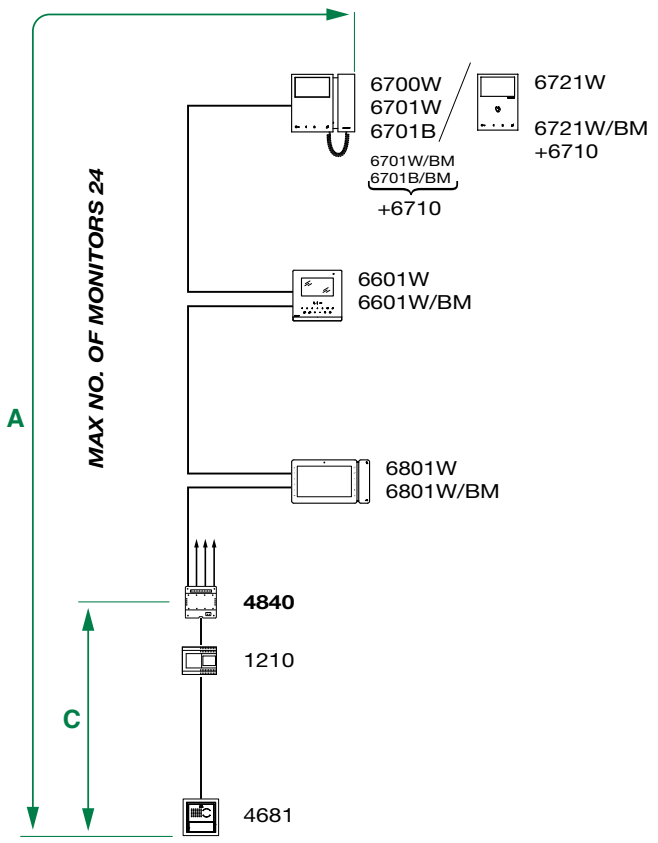

	A MAX			C MAX			Art. 1216
	6700W, 6701W(/BM), 6701B(/BM) 6721W(/BM) MINI	**6801W(/BM) MAXI**	**6601W(/BM) ICONA**	**6700W, 6701W(/BM), 6701B(/BM) 6721W(/BM) MINI**	**6801W(/BM) MAXI**	**6601W(/BM) ICONA**	
Comelit Art. 4577/4579 1 mm² (Ø 1,2 mm AWG 17)	**160 m** (525 feet)	**90 m** (295 feet)	**90 m** (295 feet)	**80 m** (263 feet)	**40 m** (131 feet)	**40 m** (131 feet)	
UTP5 cat. 5 0,2 mm² (Ø 0,5 mm AWG 24)	**70 m** (230 feet)	**50 m** (164 feet)	**50 m** (164 feet)	**40 m** (131 feet)	**25 m** (82 feet)	**25 m** (82 feet)	
0,28 mm² (Ø 0,6 mm AWG 23)	**70 m** (230 feet)	**50 m** (164 feet)	**50 m** (164 feet)	**40 m** (131 feet)	**25 m** (82 feet)	**25 m** (82 feet)	
0,5 mm² (Ø 0,8 mm AWG 20)	**70 m** (230 feet)	**50 m** (164 feet)	**50 m** (164 feet)	**40 m** (131 feet)	**25 m** (82 feet)	**25 m** (82 feet)	
1 mm² (Ø 1,2 mm AWG 17)	**100 m** (328 feet)	**60 m** (197 feet)	**60 m** (197 feet)	**50 m** (164 feet)	**30 m** (98 feet)	**30 m** (98 feet)	
1,5 mm² (Ø 1,4 mm AWG 15)	**50 m** (164 feet)	**40 m** (131 feet)	**30 m** (98 feet)	**25 m** (82 feet)	**25 m** (82 feet)	**15** (49 feet)	
UTP5 cat. 5 0,2 mm² (Ø 0,5 mm AWG 24) MULTI PAIR CABLE ⁜ GREEN / GREEN / WHITE / ORANGE / WHITE / ORANGE / BLU / BLU / WHITE / BROWN / WHITE / BROWN	**130 m** (426 feet)	**100 m** (328 feet)	**100 m** (328 feet)	**65 m** (213 feet)	**50 m** (164 feet)	**50 m** (164 feet)	

⁜ UTP cable with multi-cable connection: FOLLOW THE COLOURS SHOWN IN THE DIAGRAM!

Maximum system expansion

Devices	 6700W 6701W(/BM) 6701B(/BM)	 6721W(/BM)	 6601W(/BM)	 6801W(/BM)	 6741W(/BM)
Maximum number of internal units that can be powered from Art.1210	**100**	**100**	**90**	**100**	**100**✱ (BUILDING Mode) **10**✱ (KIT Mode)
Call repetition devices that can be used	**1229A**	**1229A**	**1229A** **1229** #	**1229A** **1229** #	**1229A**

✱ For further information, see the manual of Art. 6741W

For installation information and limits, consult the relative manual.

Maximum expansion per apartment

Devices	 6700W 6701W(/BM) 6701B(/BM)	 6721W(/BM)	 6601W(/BM)	 6801W(/BM)	 6741W(/BM)
Maximum number of internal units (including call repetition devices) with the same user code	**4**	**4**	**4**	**4**	**1** ✱
Maximum number of main internal units powered from the riser	**1**	**1**	**1**	**1**	**1**
Maximum number of main units that can be powered by Art. 1212/B	**/**	**/**	**3**	**3**	**/**

✱ A single **6741W(/BM)** monitor can be installed for each user code; this will also be the only main monitor.
In Building mode: up to 3 secondary monitors can be added (6700W, 6701W (/BM), 6701B (/BM), 6721W (/BM), 6801W (/BM), 6601(BM)).
In Kit mode: only 1 secondary monitor can be added (6700W, 6701W (/BM), 6701B (/BM), 6721W (/BM), 6801W (/BM), 6601(BM)).

Example of maximum expansion per apartment

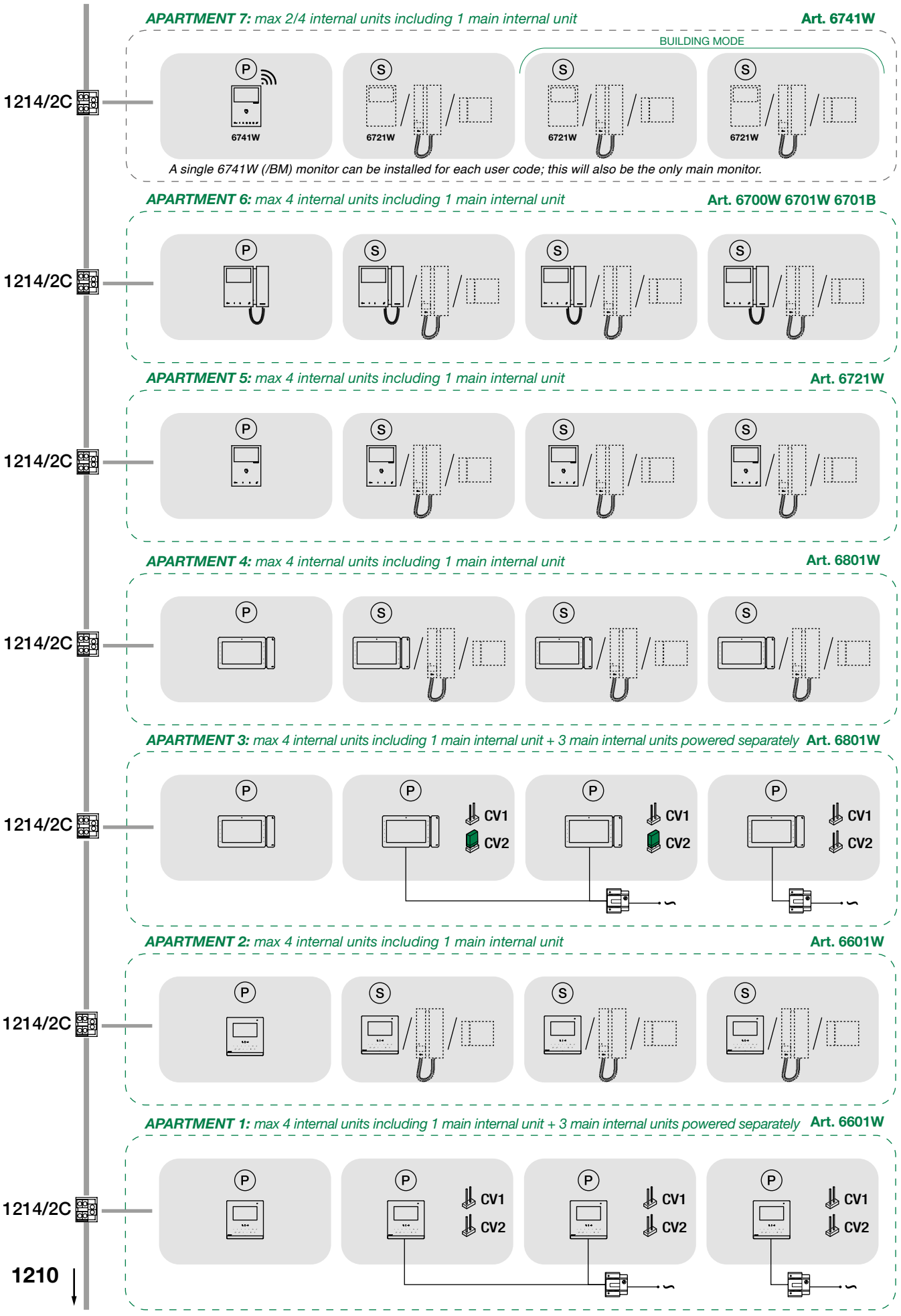

Wiring diagrams

System with a single riser

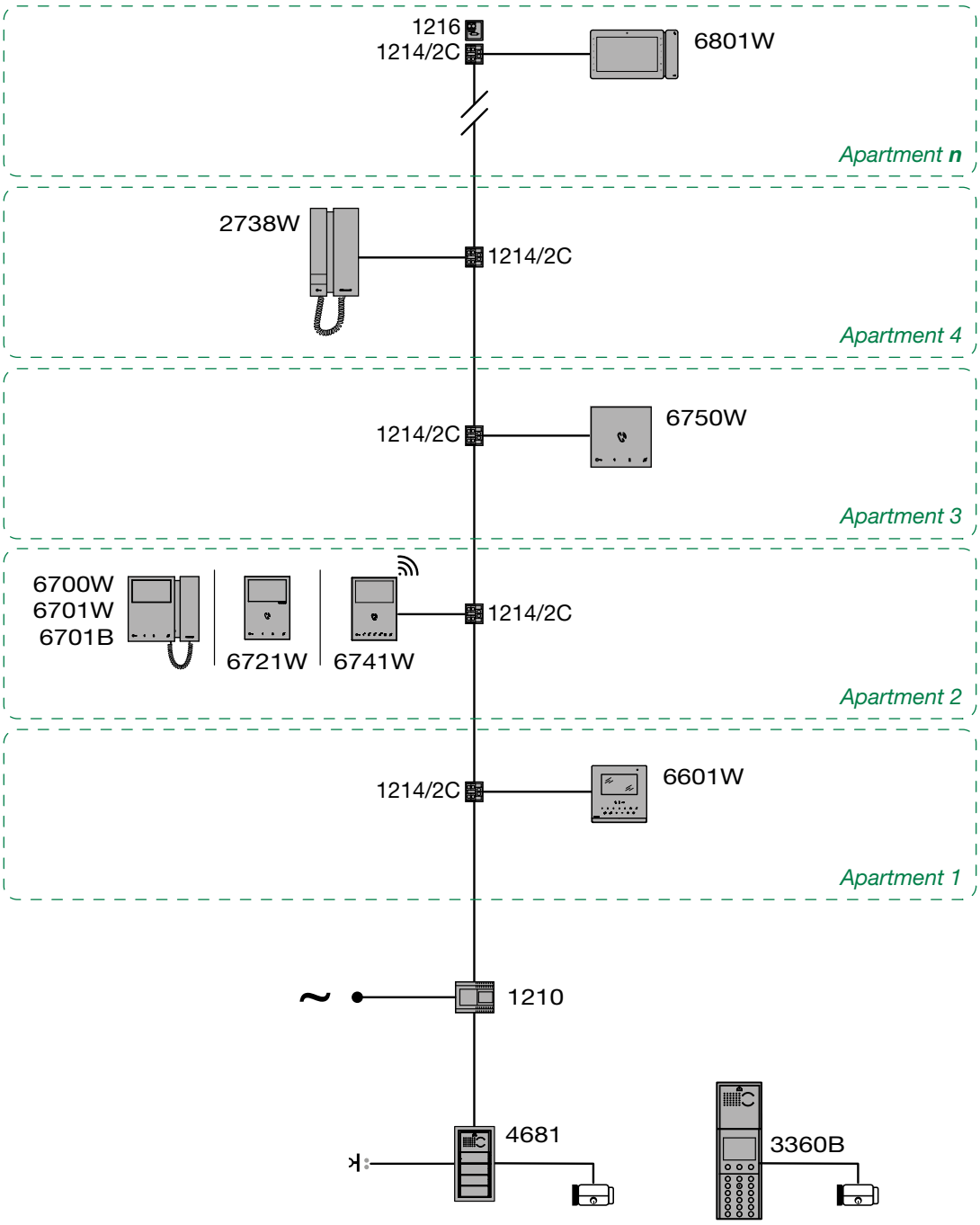

VIDEO ENTRY SYSTEM RISER

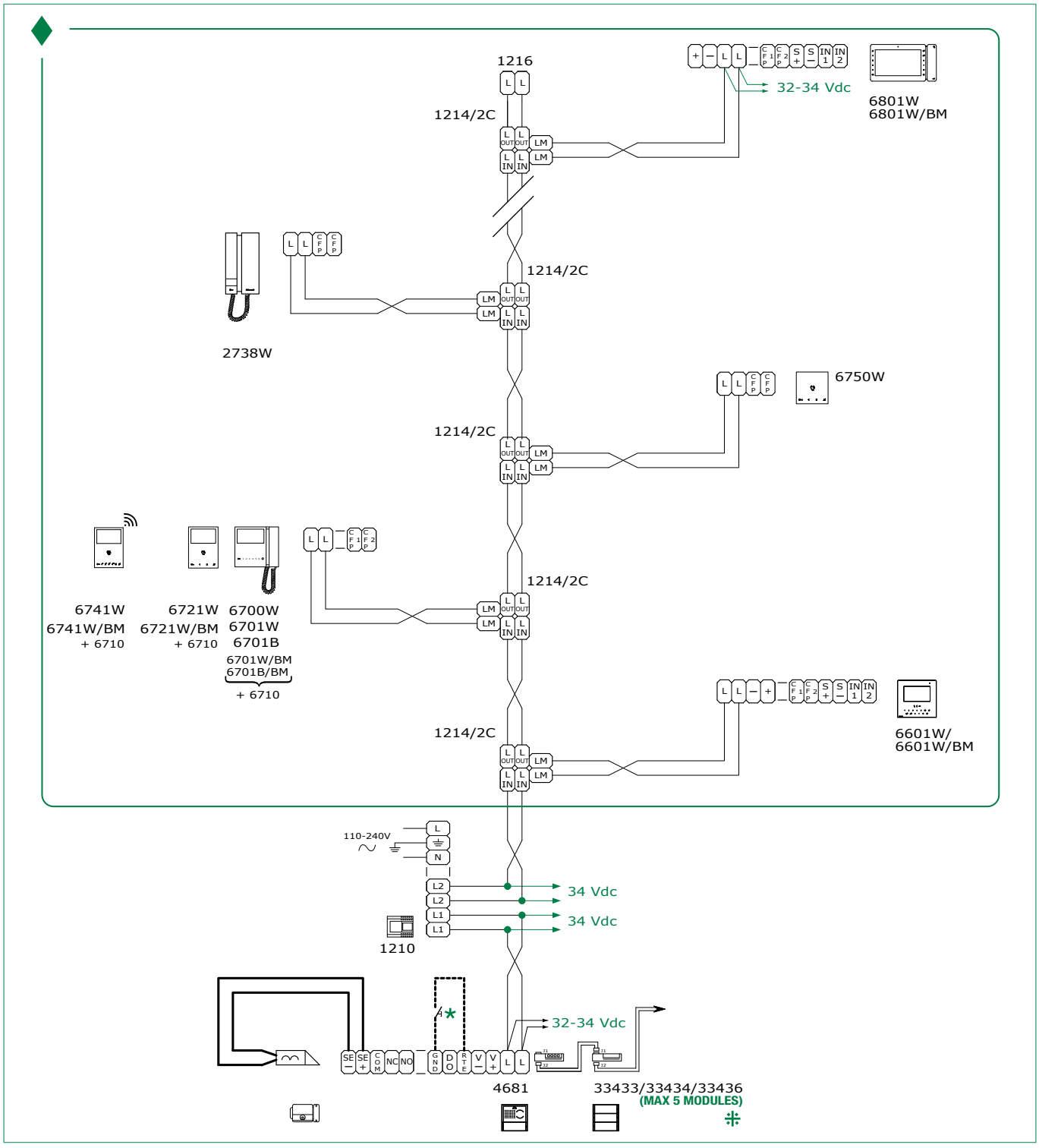

✱ **Max 20m.** Local lock-release button.

⁜ For different configurations to those indicated in the diagram, consult the manual for article 4681 or the relative section of the system manual.

Variant with Digital External Unit

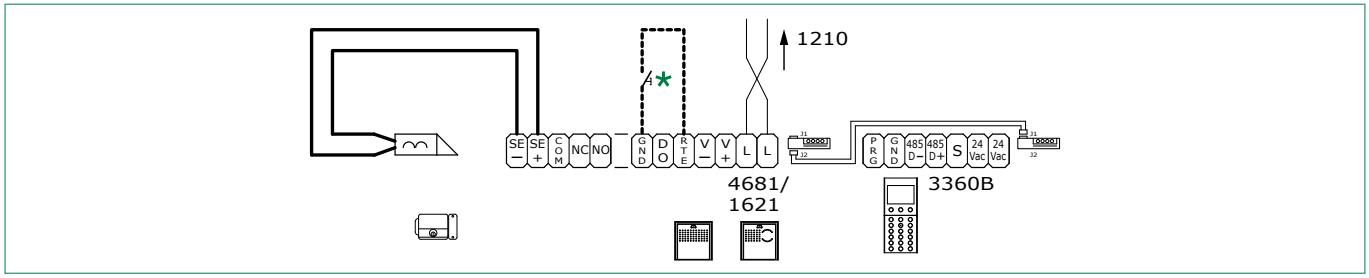

✱ **Max 20m.** Local lock-release button.

System with a single riser with two entrances, one of which is audio

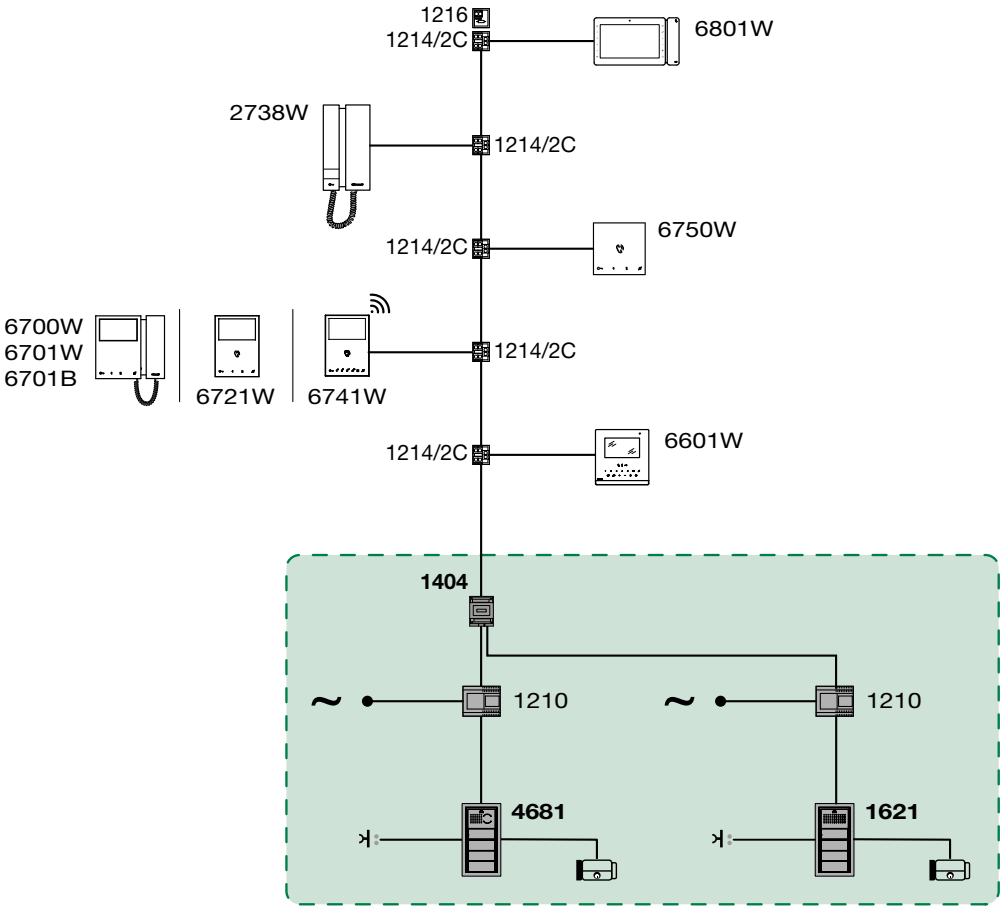

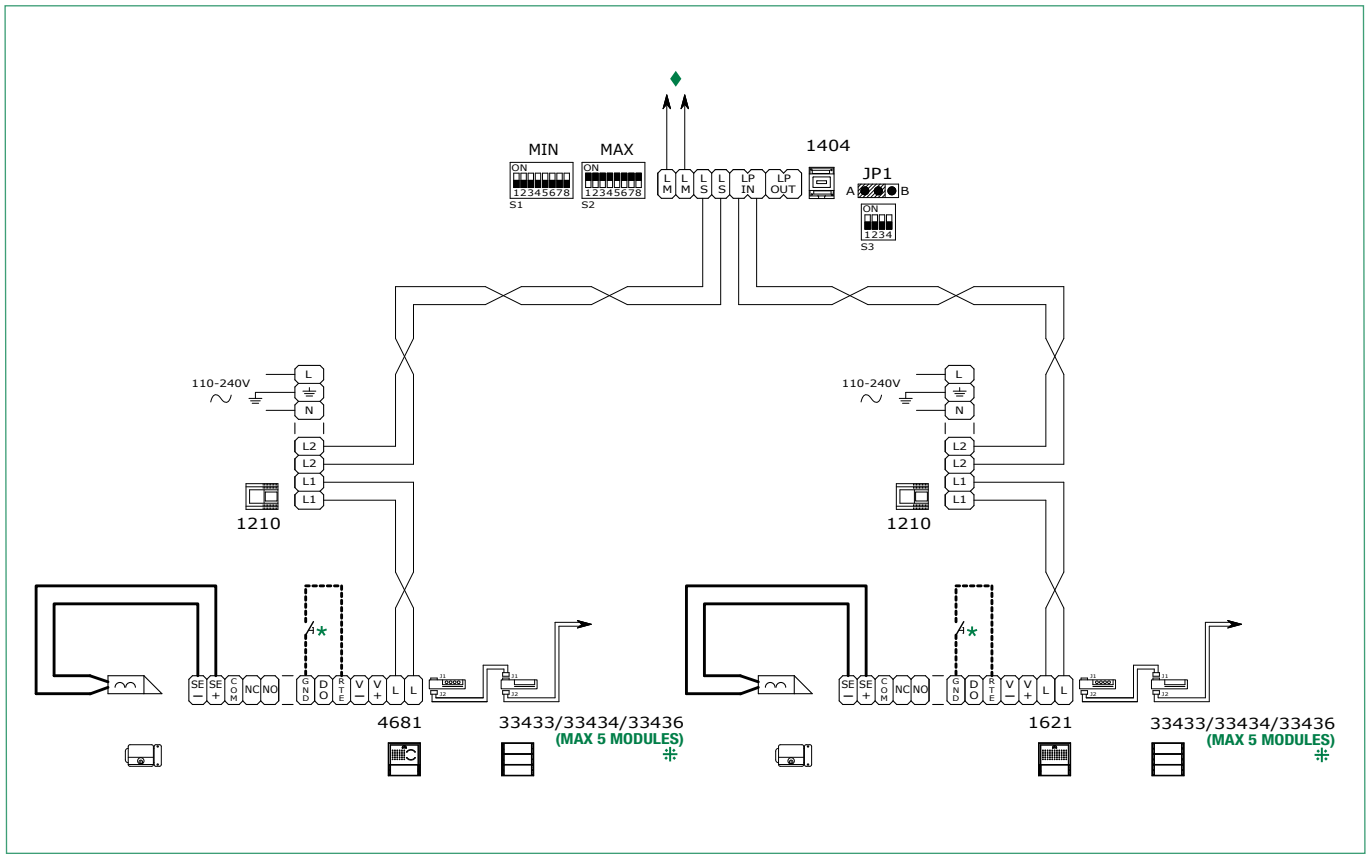

♦ Video door entry system riser (see: **"VIDEO ENTRY SYSTEM RISER"**)

✱ **Max 20m.** Local lock-release button.

⁜ For different configurations to those indicated in the diagram, consult the manual for article 4681/1621 or the relative section of the system manual.

System with 2 main entrances in TOP mode and 3 risers, 2 of which are equipped with a secondary external unit

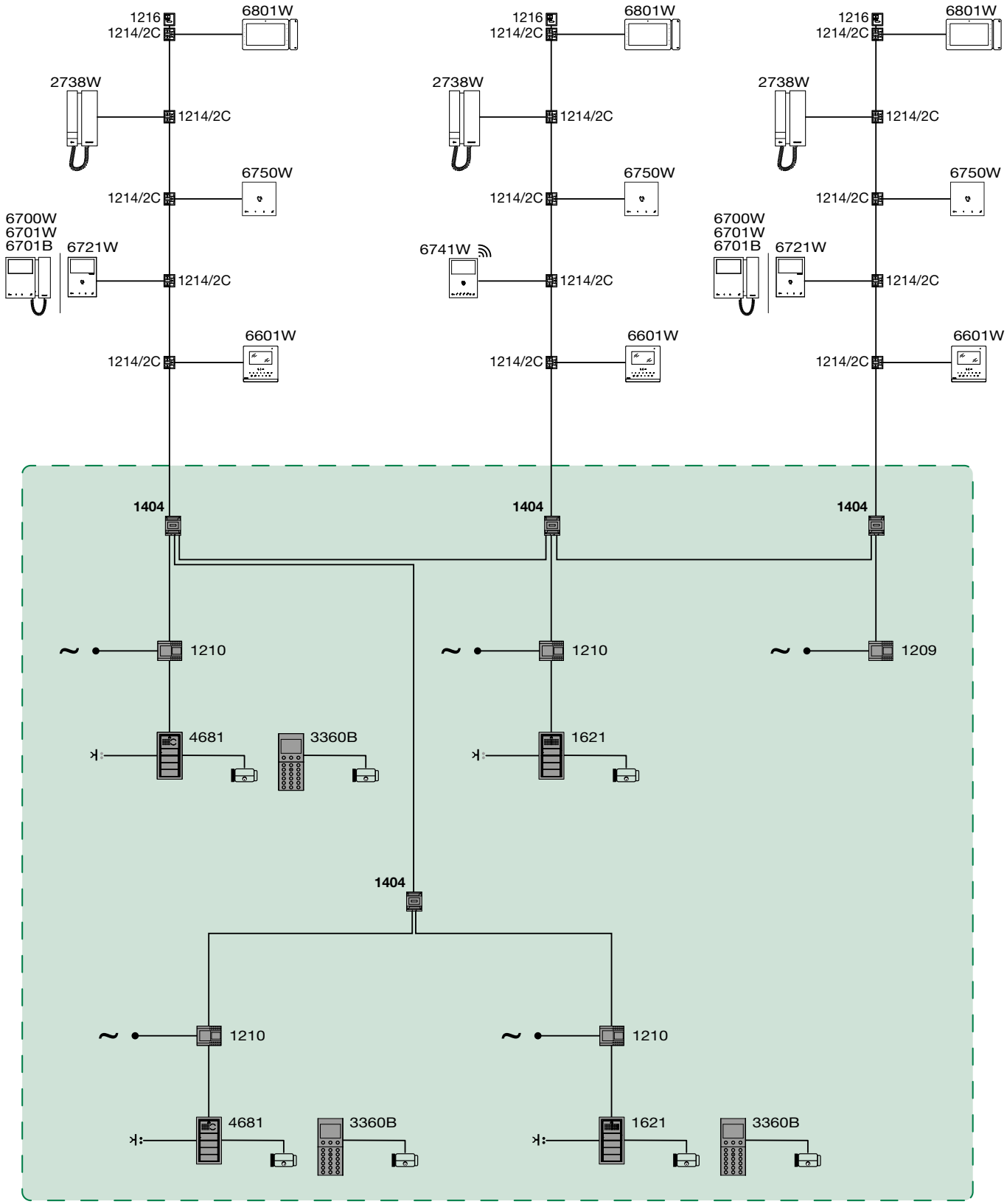

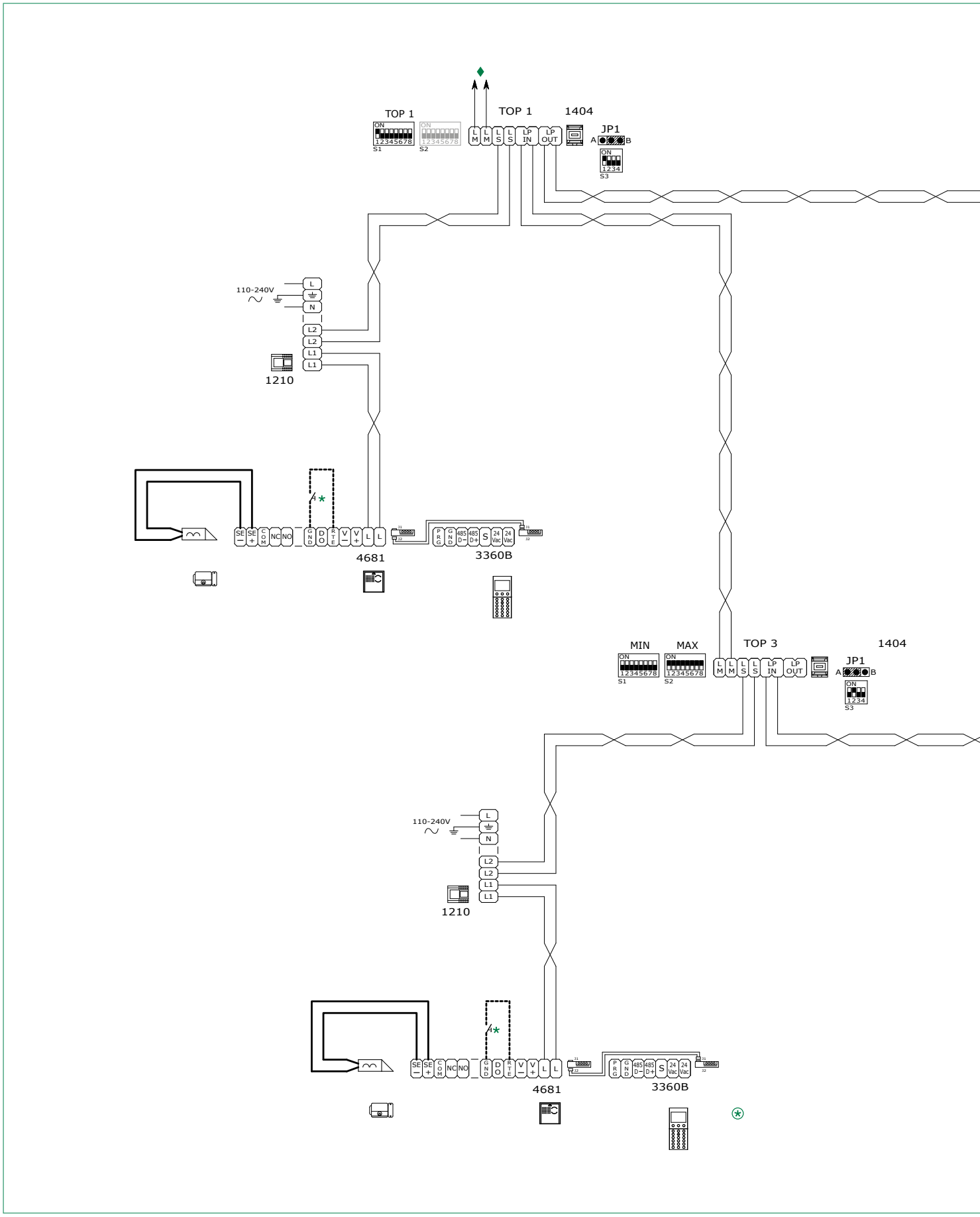

♦ Video door entry system riser (see: **"VIDEO ENTRY SYSTEM RISER"**)

✱ **Max 20m.** Local lock-release button.

Ⓐ Main port in TOP mode.

⁜ For different configurations to those indicated in the diagram, consult the manual for article 4681/1621 or the relative section of the system manual.

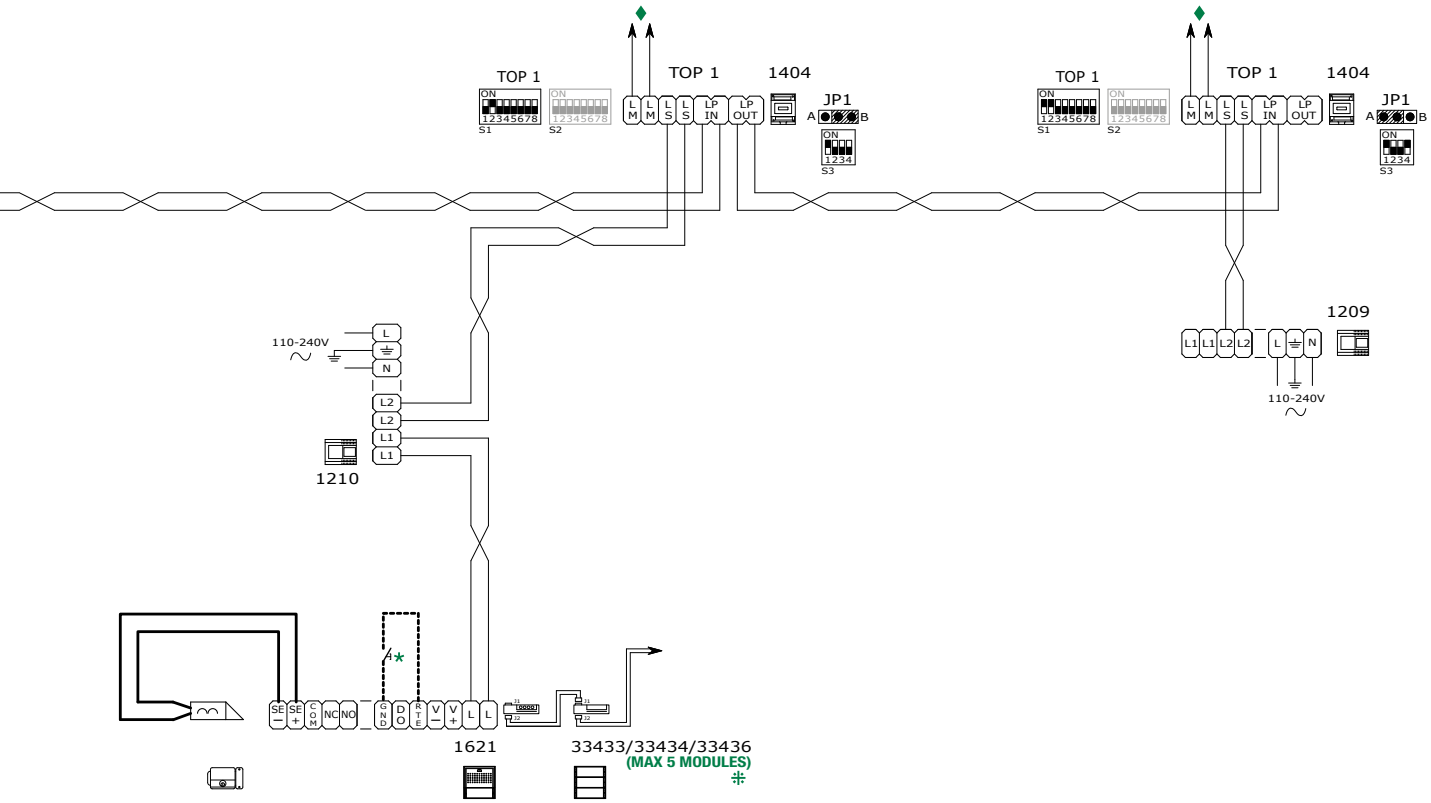
TOP 1
TOP 1
1404
JP1
TOP 1
TOP 1
1404
JP1
1209
110-240V
1210
1621
33433/33434/33436
(MAX 5 MODULES)
110-240V

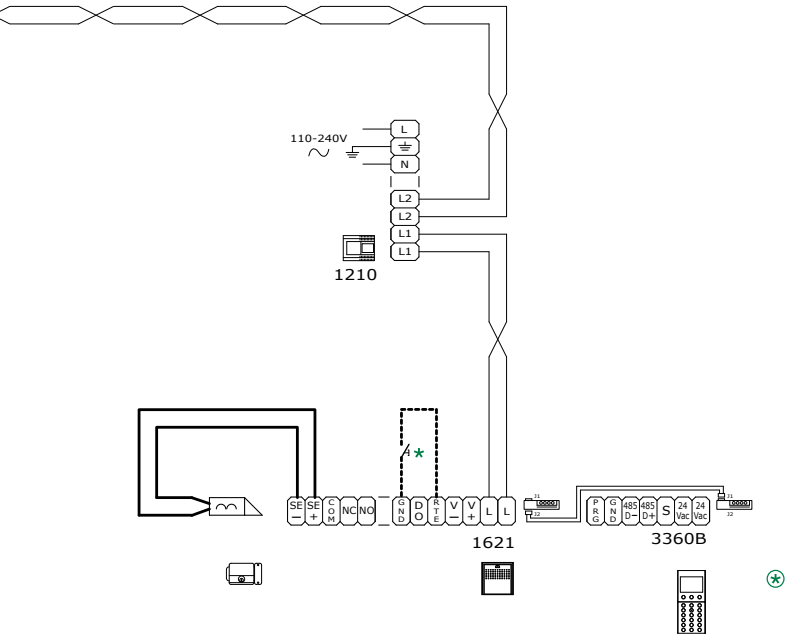
110-240V
1210
1621
3360B

System with a 2 risers, one main entrance and n secondary entrances

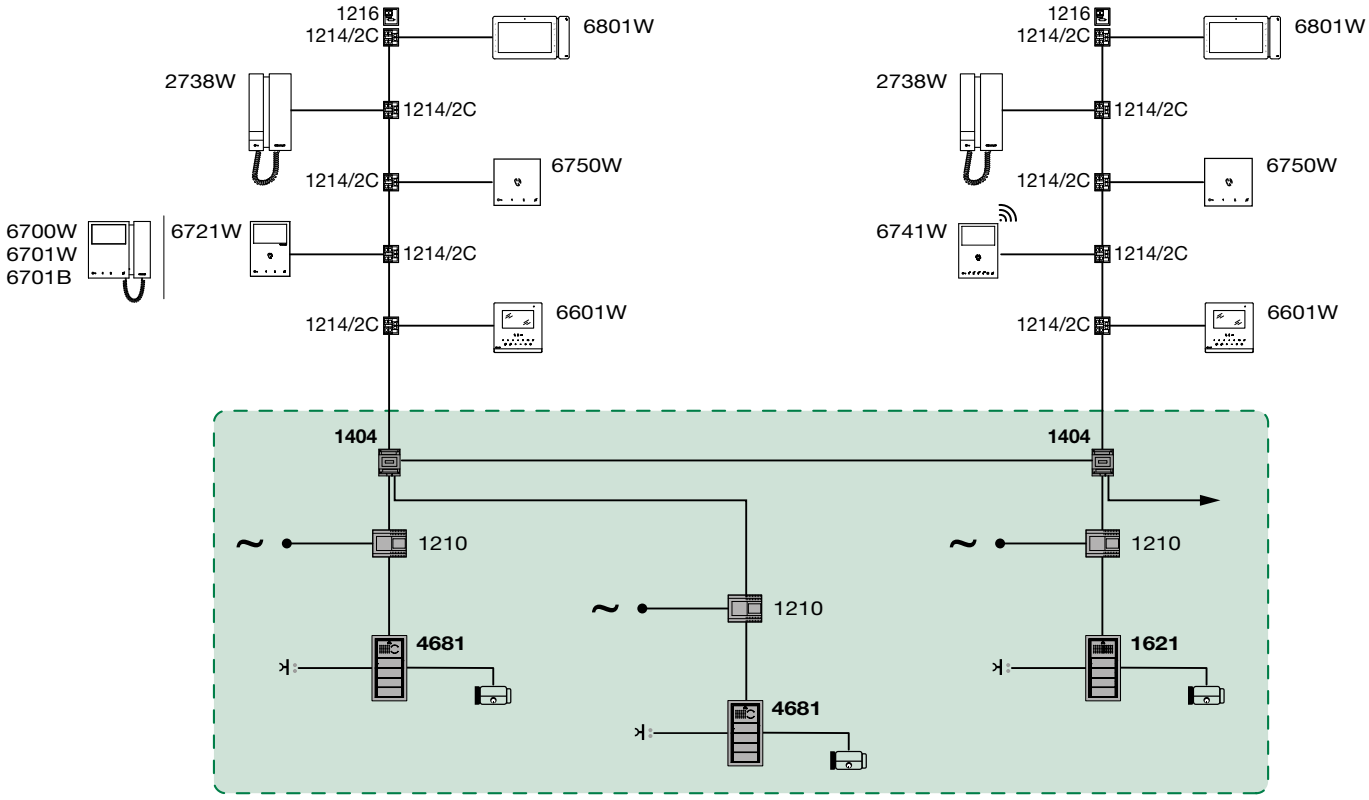

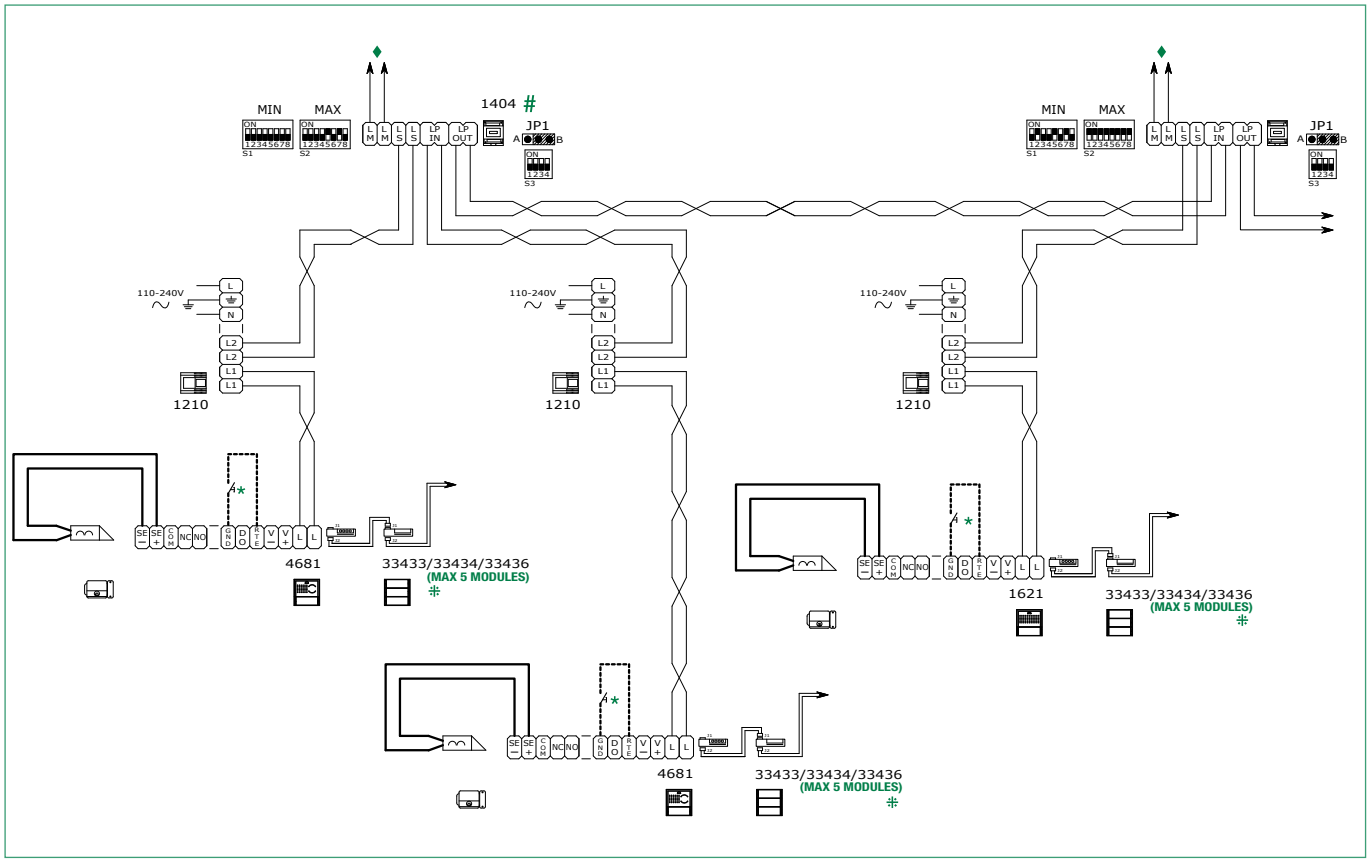

♦ Video door entry system riser (see: **"VIDEO ENTRY SYSTEM RISER"**)

✱ **Max 20m.** Local lock-release button.

\# CAUTION! Separate switching devices must manage code ranges which are not overlapping.

⁜ For different configurations to those indicated in the diagram, consult the manual for article 4681/1621 or the relative section of the system manual.

System with n single-family units and 1 main external unit (connection in cascade)

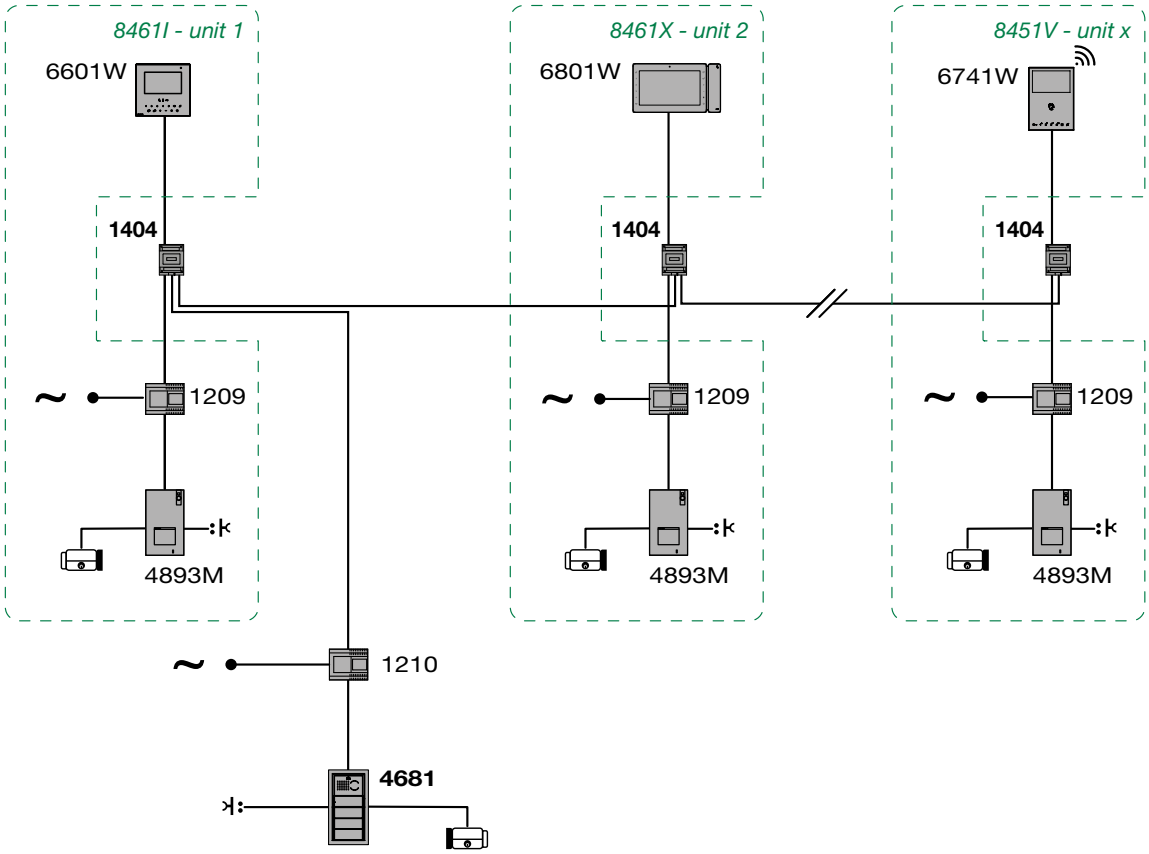

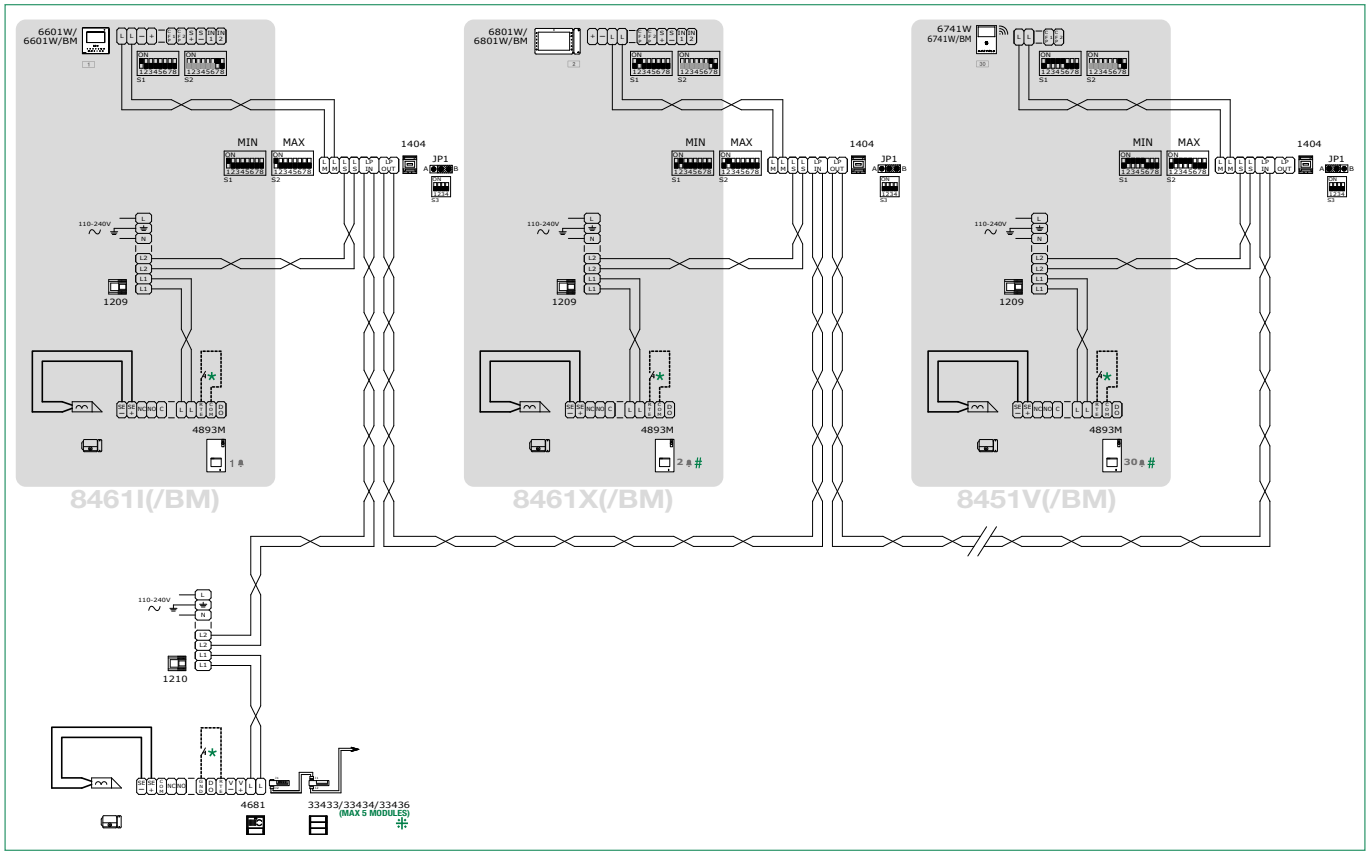

✱ **Max 20m.** Local lock-release button.

\# For call address programming, please refer to the full manual for Art. 4893M or the relative section of the system manual.

⁜ For different configurations to those indicated in the diagram, consult the manual for article 4681 or the relative section of the system manual.

System with n single-family units and 1 main external unit (branch connection)

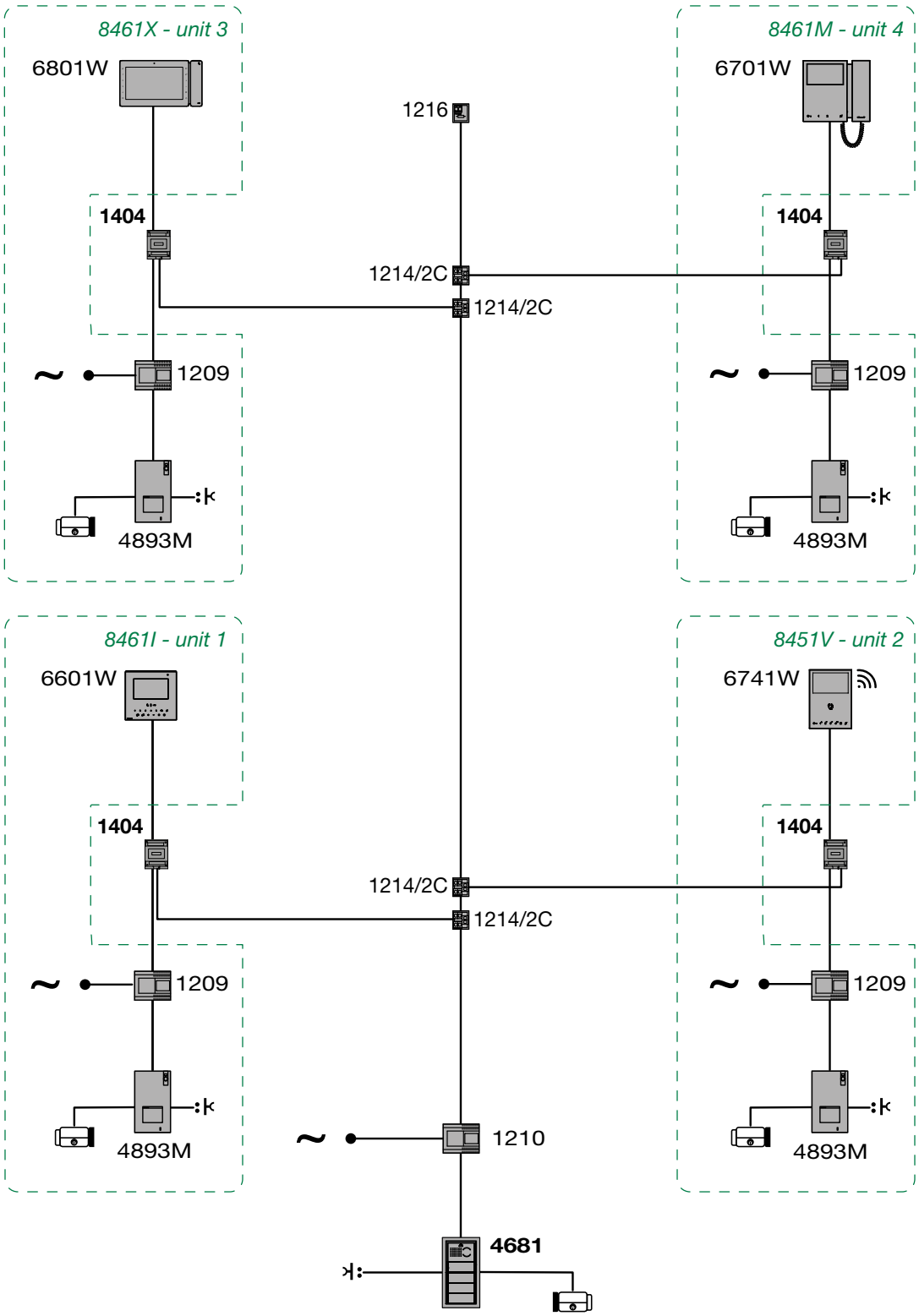

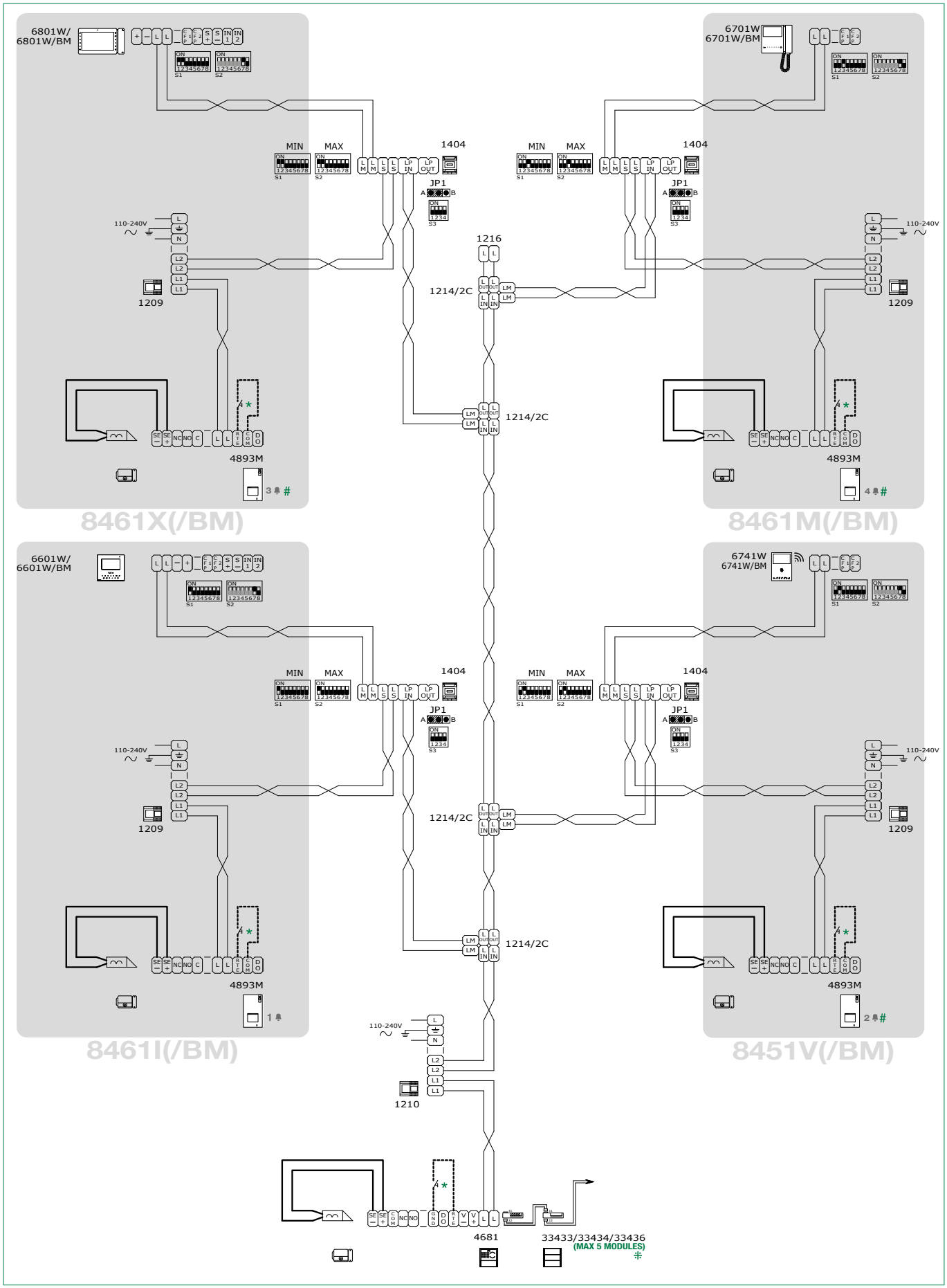

✱ **Max 20m.** Local lock-release button.

⁜ For different configurations to those indicated in the diagram, consult the manual for article 4681 or the relative section of the system manual.

\# For call address programming, please refer to the full manual for Art. 4893M or the relative section of the system manual.

System with n single-family units and a main external unit in TOP mode (connection in cascade)

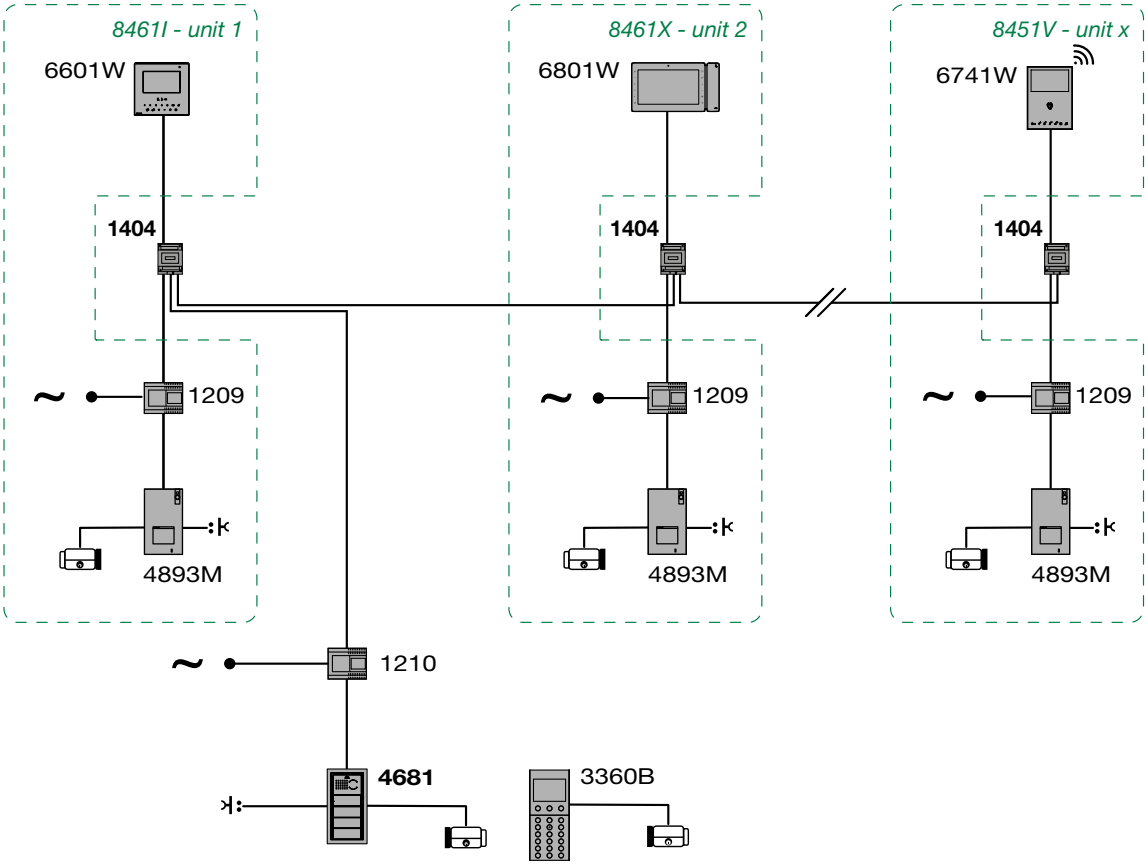

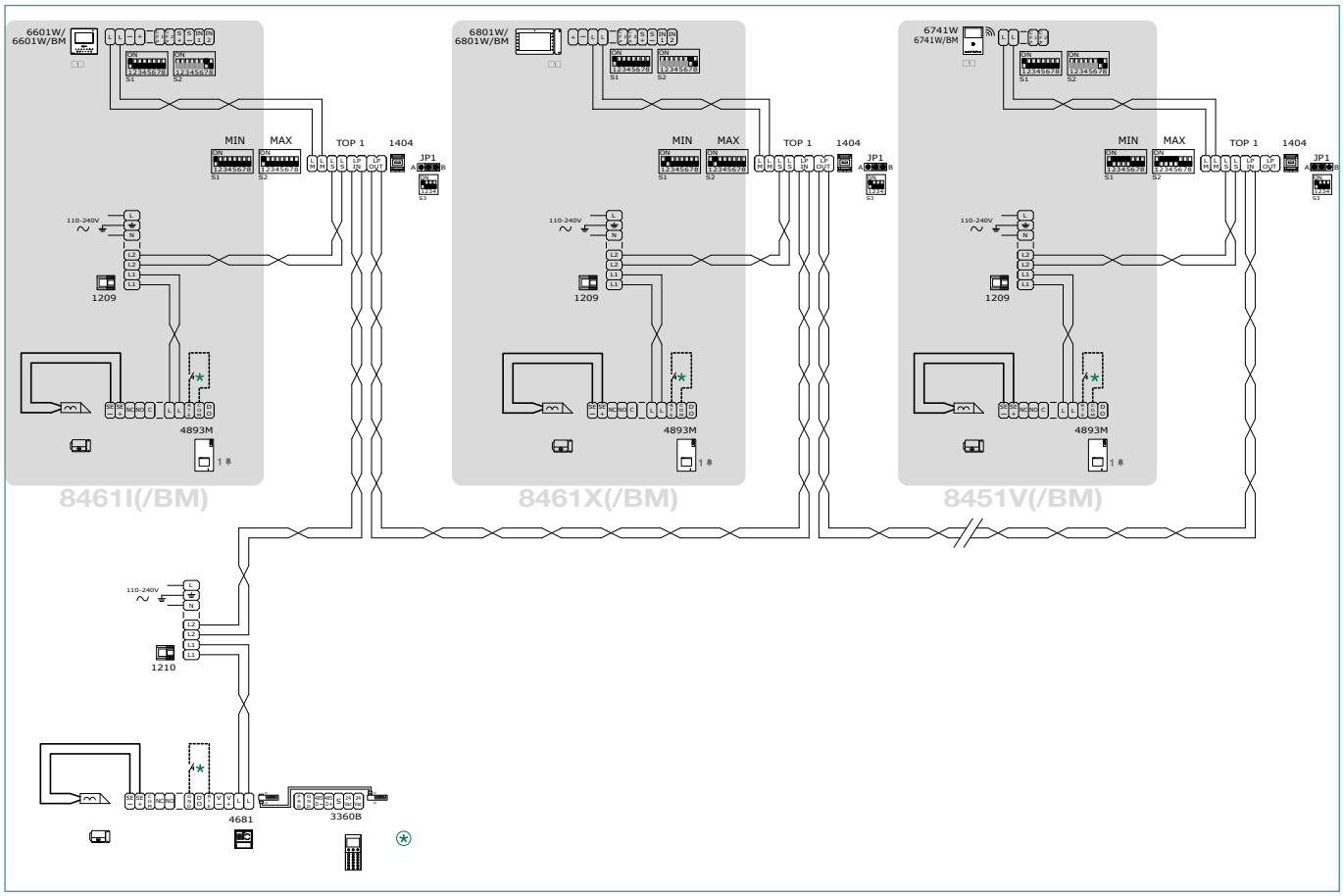

✱ **Max 20m.** Local lock-release button.

⊛ Main port in TOP mode.

System with video distribution unit, 2 risers and 1 external unit

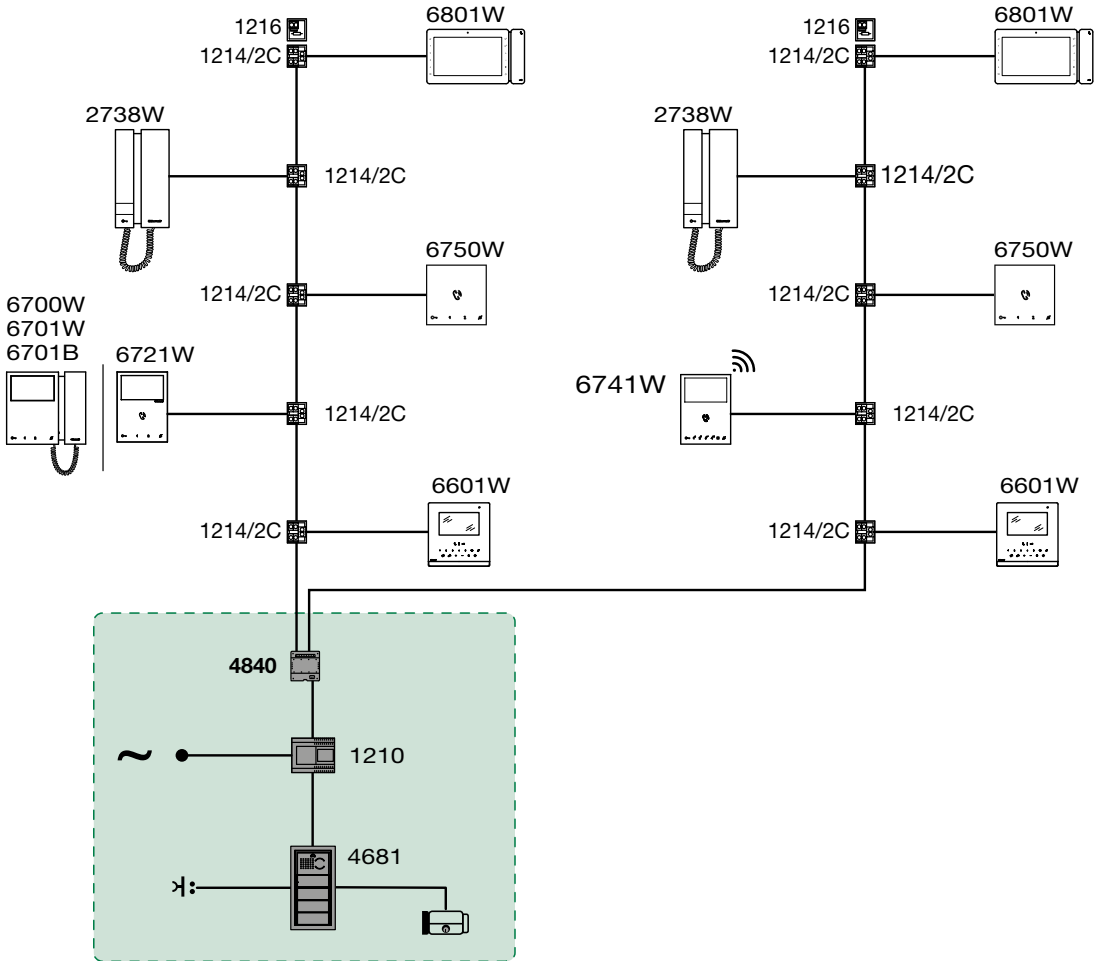

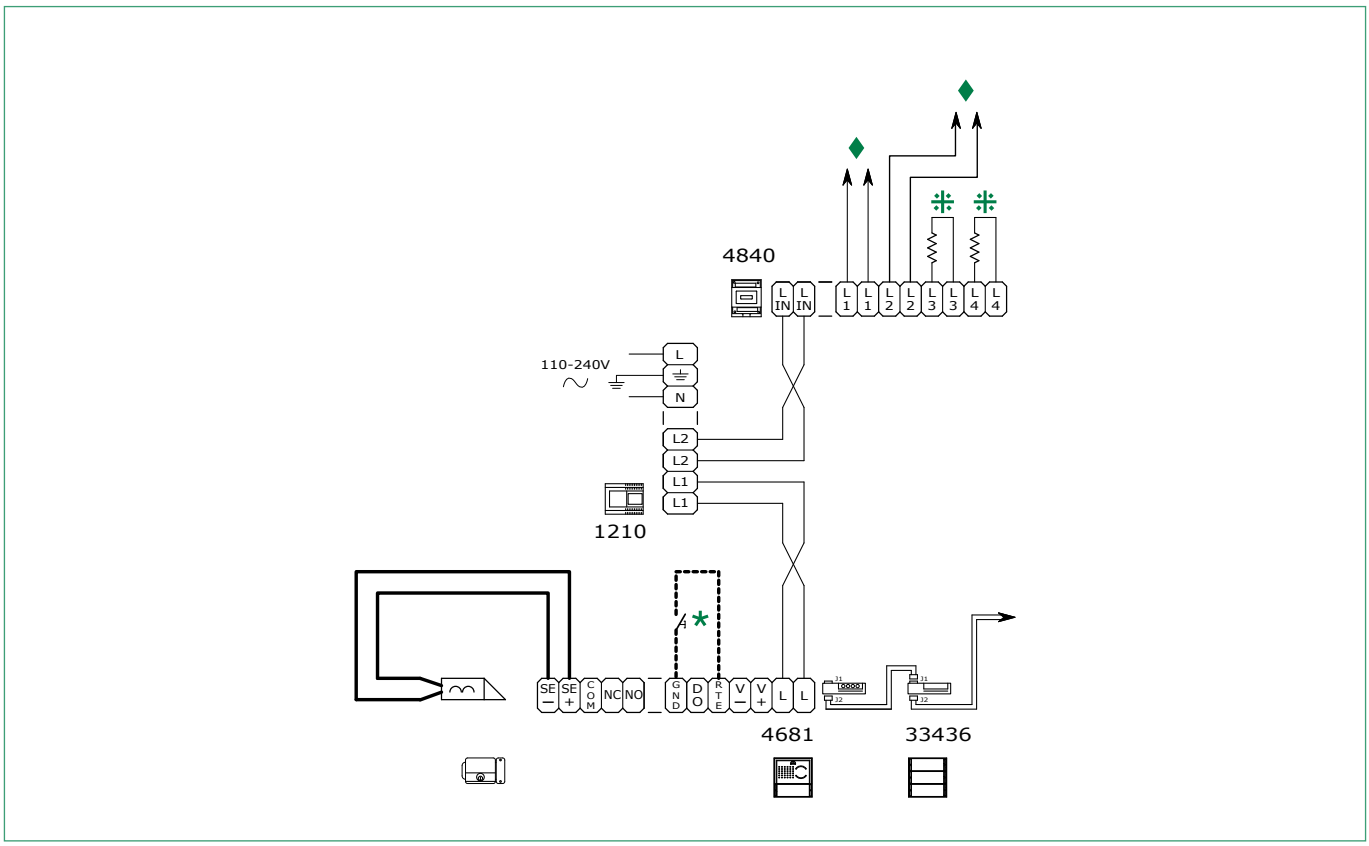

♦ Video door entry system riser (see: **"VIDEO ENTRY SYSTEM RISER"**)

✱ **Max 20m.** Local lock-release button.

⁜ Only cut off the resistance of the output used..

System with video distribution unit, 2 single-family units and a main external unit

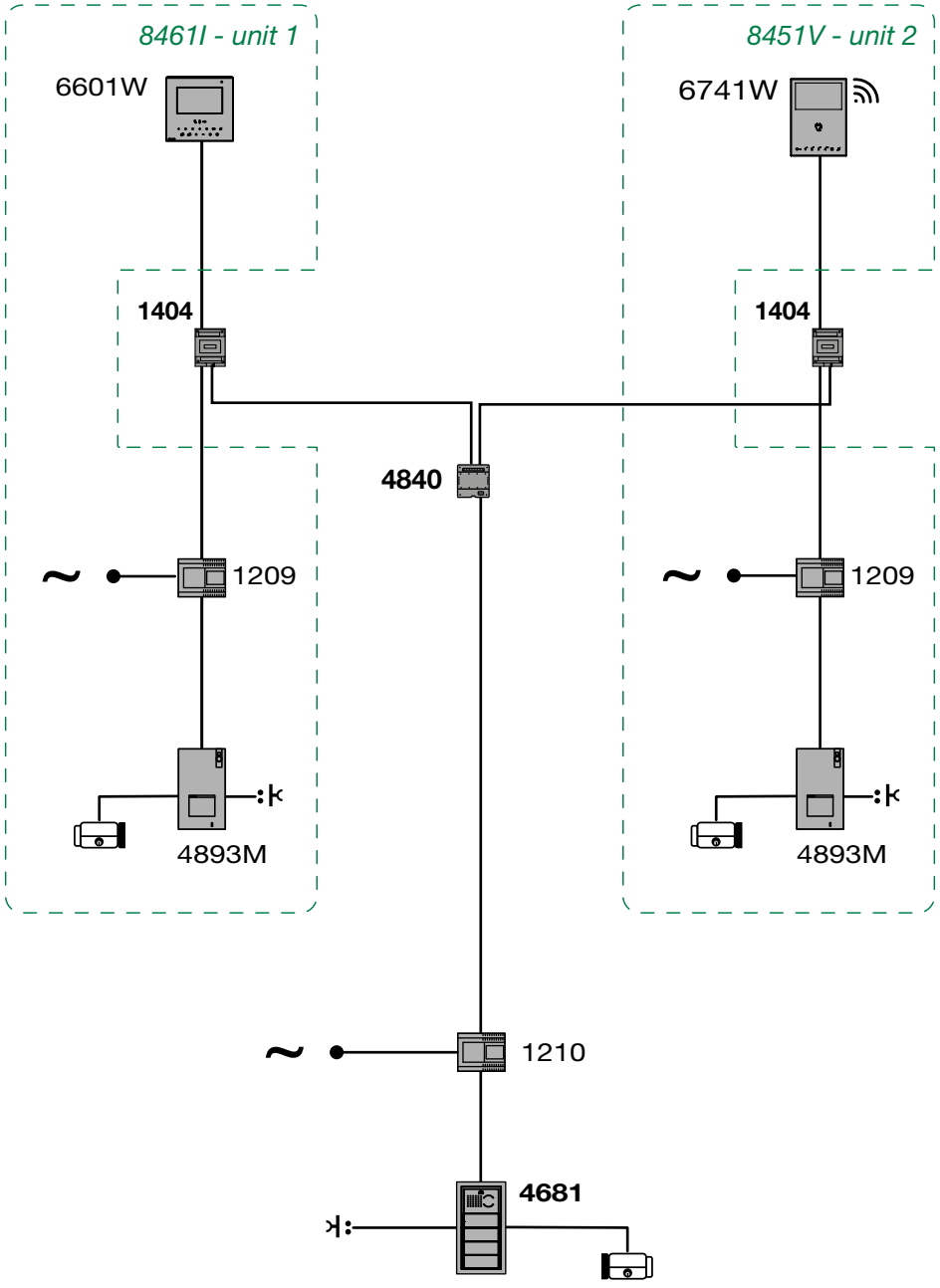

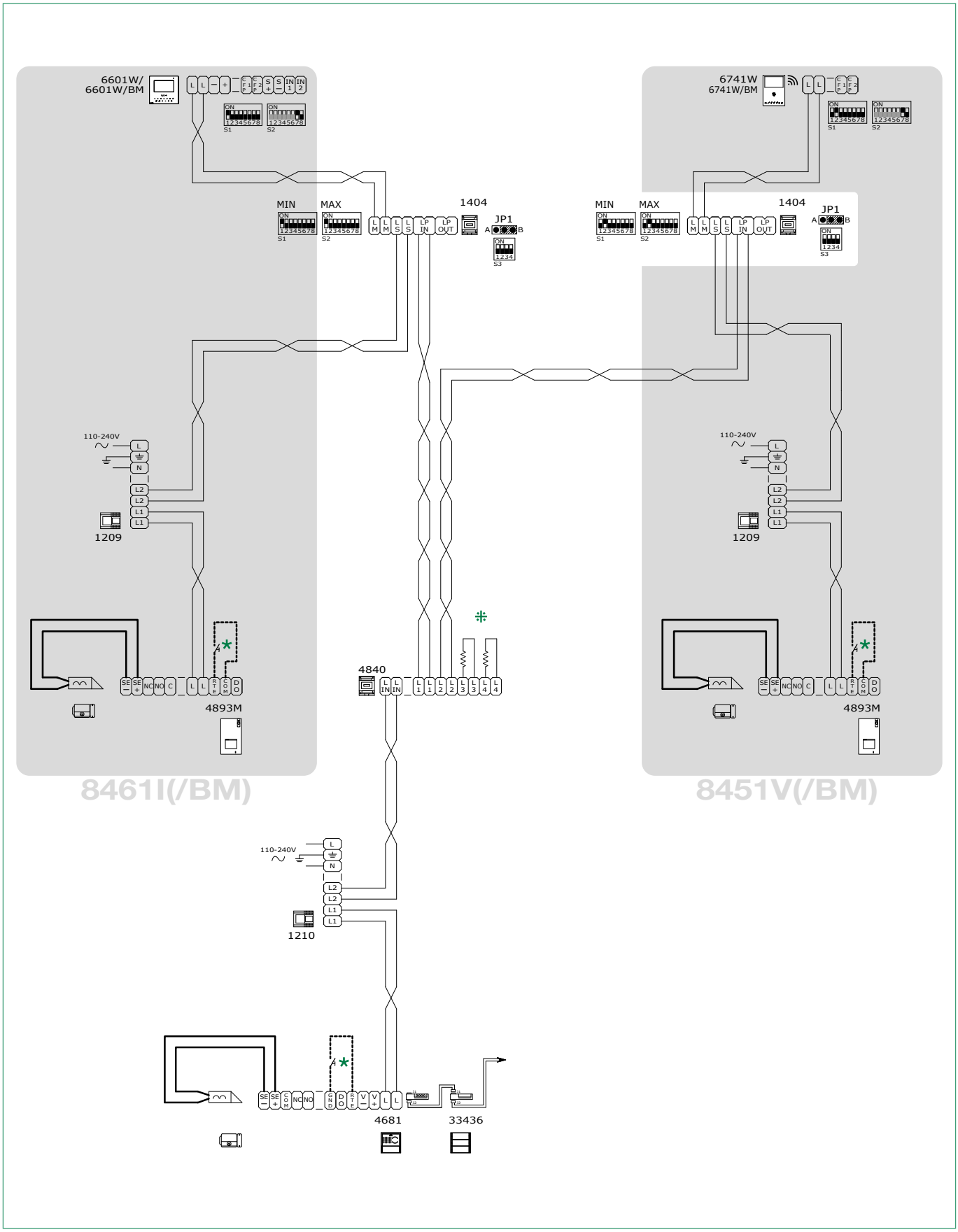

✱ **Max 20m.** Local lock-release button.

⌗ Only cut off the resistance of the output used.

Use of actuator relay Art. 1256

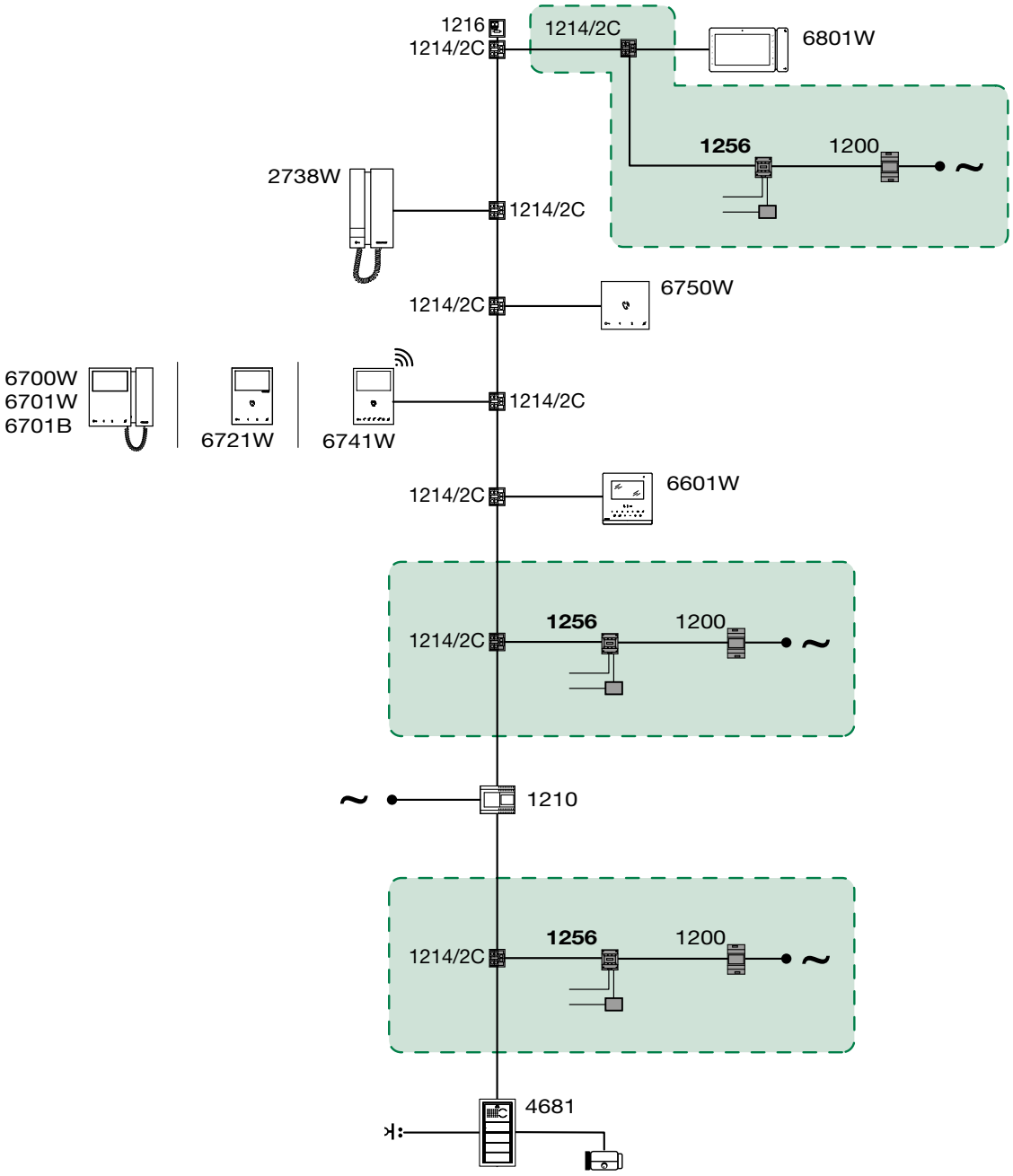

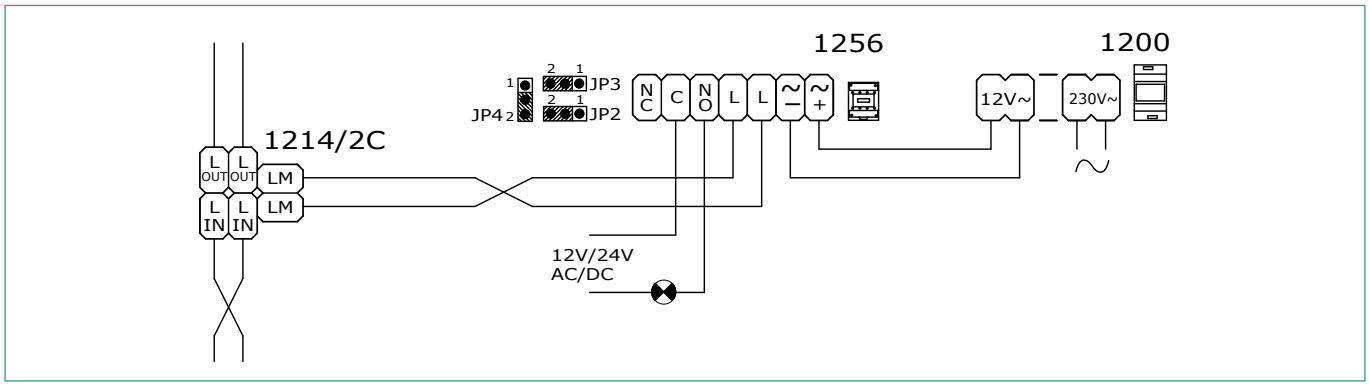

Use of remote camera module Art. 1409

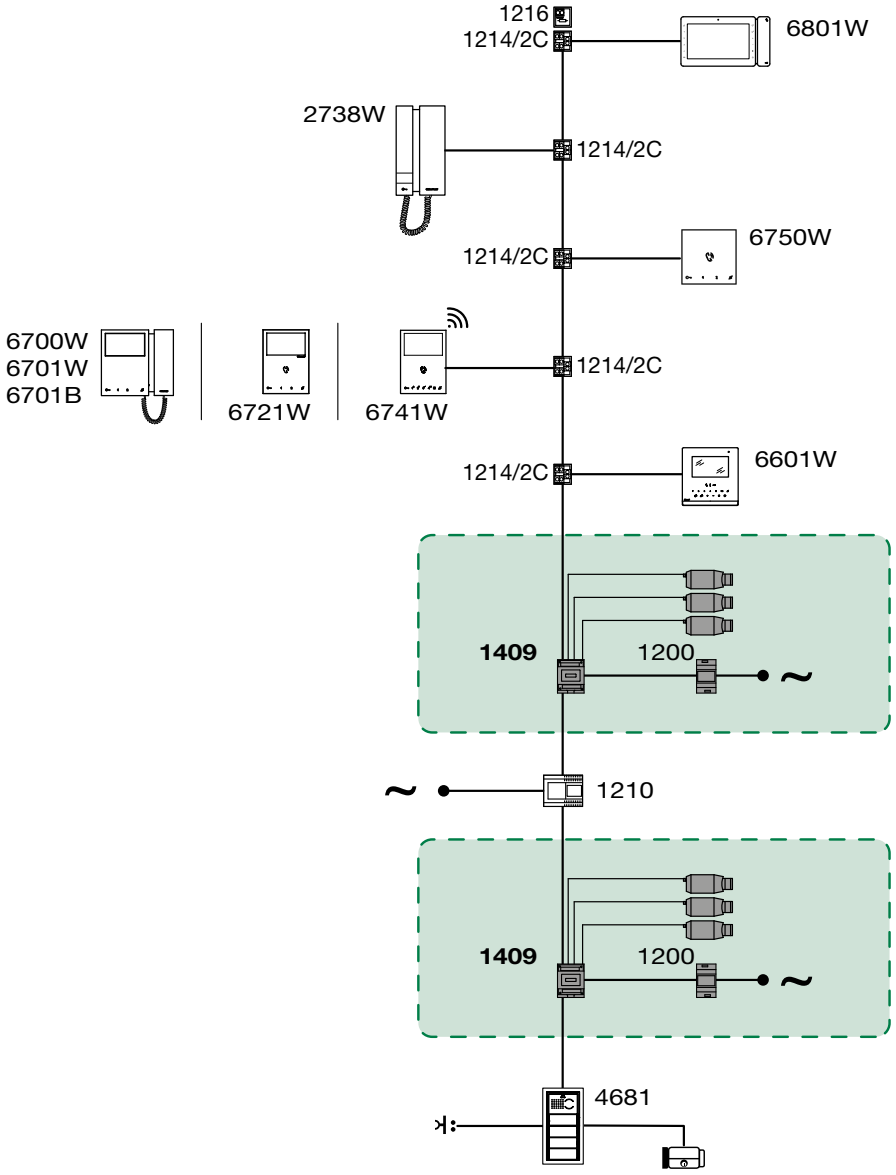

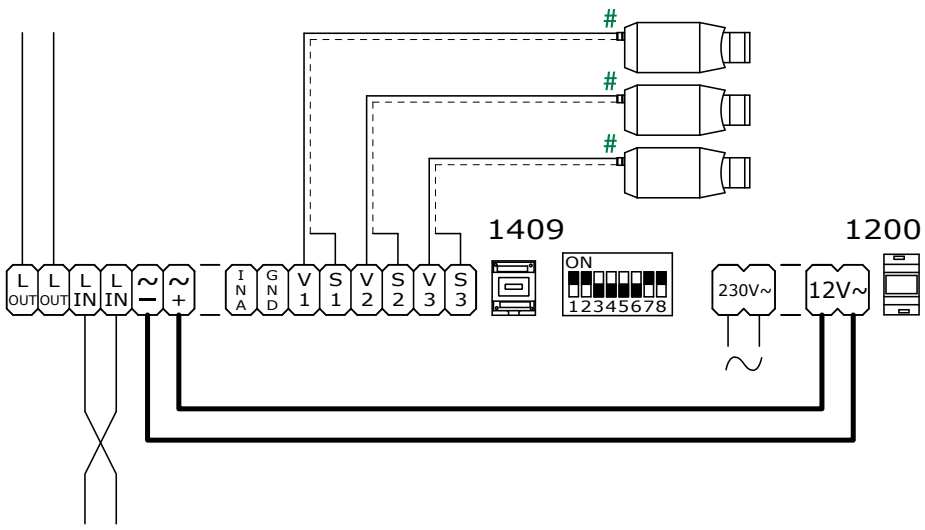

To be powered separately

Use of additional bell Art. 1229A

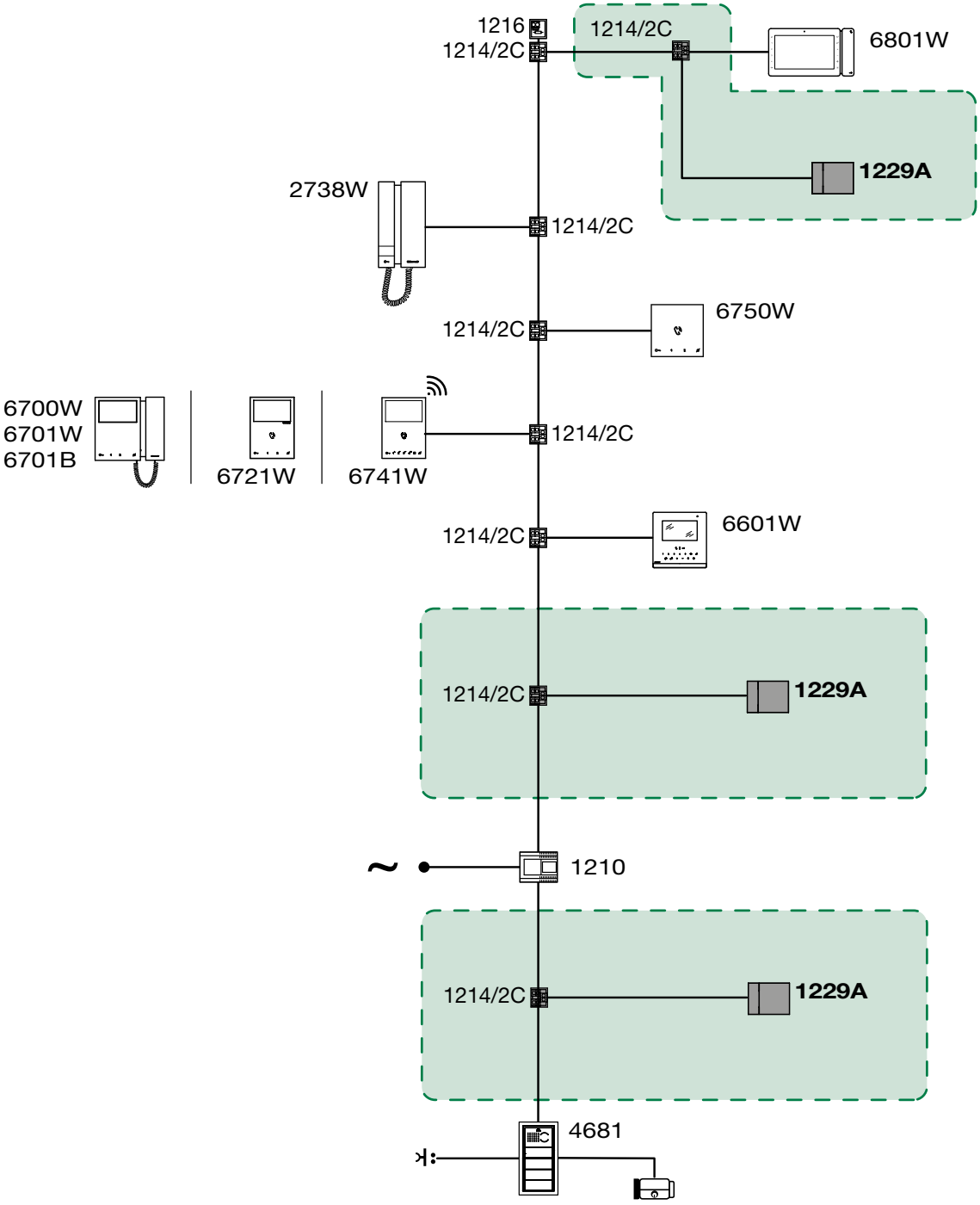

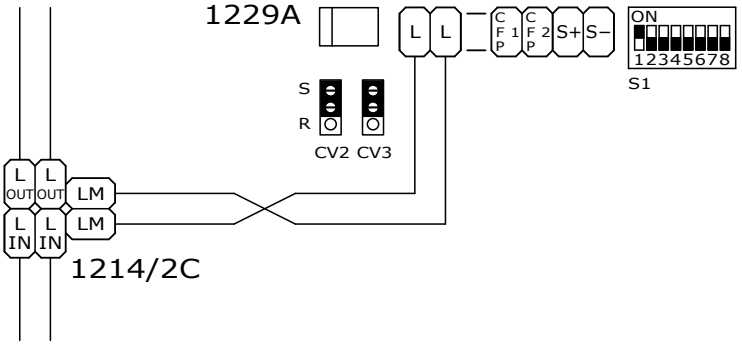

Table of contents

Warning

System performance **81**
- **Operating distances** **82**
- **Operating distances with video concentrator-amplifier Art. 4933** **83**
- **Maximum system expansion** **84**
- **Maximum expansion per apartment** **84**
  - Example of maximum expansion per apartment 85

Wiring diagrams **86**
- **System with a single riser** **86**
- **Variant with Digital External Unit** **87**
- **Video entry phone system for condominiums with 1 to 4 risers with 2 external units** **88**
- **Video entry phone system for condominiums with more than 4 risers** **89**
- **System with 1 main video entrance panel (max 9 secondary video units)** **90**
- **Connection in cascade Art. 4834/9.** **92**
- **Connection of amplifier Art. 4833C** **93**
- **Connection in cascade with several internal units (up to 25 per branch from Art. 4888C)** **94**
- **Video door entry system with 1 main entrance and porter switchboard** **95**
- **Video door entry system with 2 main entrances and porter switchboard** **96**
- **Video door entry system with 1 main entrance, 3 secondary video units and porter switchboard** **98**
- **Video door entry system with 2 main entrances, 3 secondary audio units and porter switchboard** **100**
- **Simplebus TOP video entry phone system with 1 main entrance, 4 secondary entrances and the relative secondary porter switchboards** **102**
- **Simplebus TOP video entry phone system with 2 main entrances, 4 secondary entrances and main porter switchboard** **104**
- **Simplebus TOP video entry phone system with 2 main entrances, 1 main porter switchboard, 2 secondary entrances and relative porter switchboards** **106**
- **Simplebus TOP video entry phone system with 1 main entrance, 4 secondary entrances and 2 main porter switchboards in SERIES configuration.** **108**
- **Simplebus TOP video entry phone system with 1 main entrance, 3 secondary entrances and 2 main porter switchboards in PARALLEL configuration.** **110**
- **Switching devices in TOP1 mode, branched KIT 8461/8451 external unit in TOP mode** **112**
- **Switching devices in STANDARD mode, branched KIT 8461/8451** **114**
- **Switching devices in STANDARD mode, KIT 8461/8451 in cascade connection** **116**
- **Switching devices in TOP1 mode, KIT 8461/8451 in cascade connection, with external unit in TOP mode** **117**
- **Addition of remote camera module Art. 1409** **118**
- **Addition of remote camera module Art. 1259C** **119**
- **System with remote camera module Art. 1259C in generic actuator mode and porter switchboard** **120**

System performance

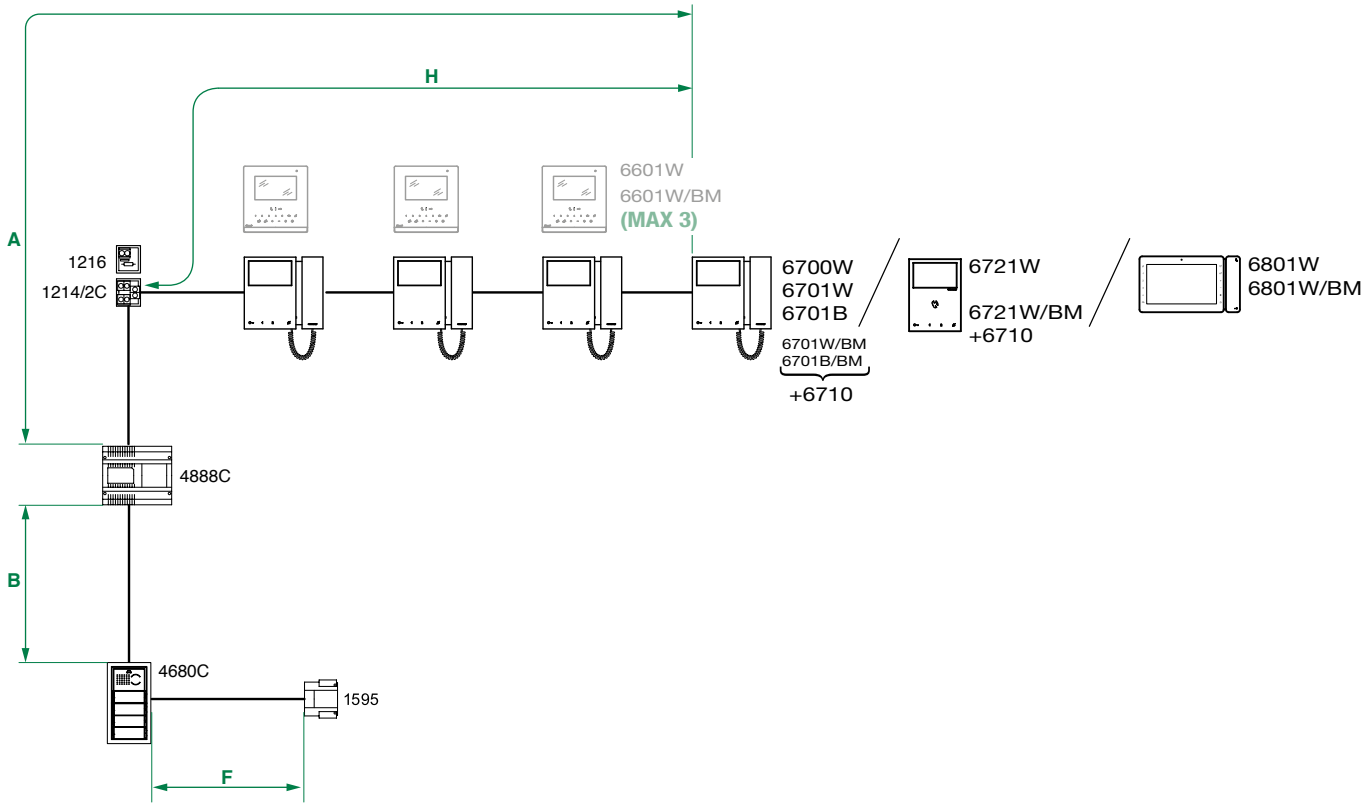

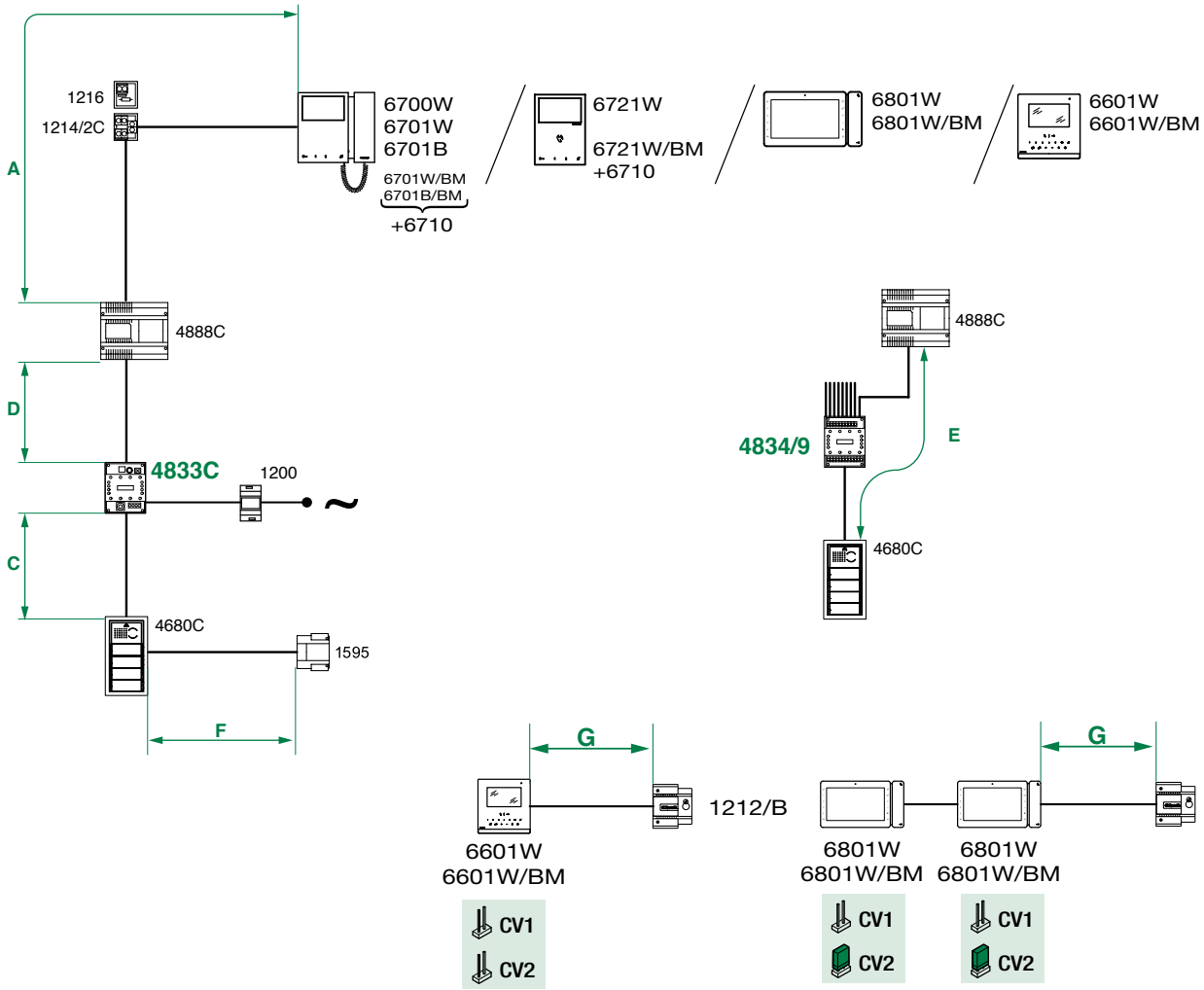

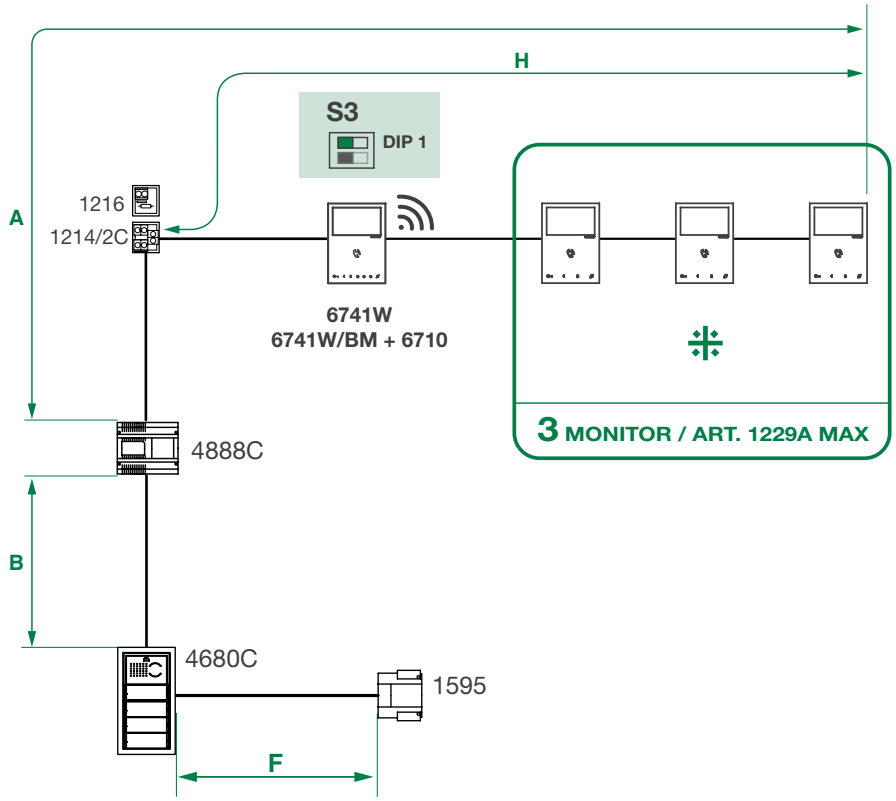

⁜ Compatible secondary monitors: 6700W, 6701W (/BM), 6701B (/BM), 6721W (/BM), 6601W(/BM), 6801W (/BM)

Operating distances

	A MAX	B MAX	C MAX	D MAX	E MAX	F MAX	G MAX	H MAX	Art.1216
Comelit Art. 4577/4579 1 mm² (Ø 1,2 mm AWG 17)	200 m (650 feet)	200 m (650 feet)	200 m (650 feet)	200 m (650 feet)	150 m (490 feet)	50 m (165 feet)	50 m (165 feet)	100 m (330 feet)	
UTP5 cat. 5 0,2 mm² (Ø 0,5 mm AWG 24)	80 m (260 feet)	150 m (490 feet)	150 m (490 feet)	150 m (490 feet)	100m (330 feet)			60 m (195 feet)	
0,28 mm² (Ø 0,6 mm AWG 23)	100 m (330 feet)	150 m (490 feet)	150 m (490 feet)	150 m (490 feet)	100 m (330 feet)	5 m (15 feet)	10 m (30 feet)	60 m (195 feet)	
0,5 mm² (Ø 0,8 mm AWG 20)	120 m (395 feet)	100 m (330 feet)	100 m (330 feet)	100 m (330 feet)	80 m (260 feet)	25 m (85 feet)	25 m (82 feet)	60 m (195 feet)	
1 mm² (Ø 1,2 mm AWG 17)	120 m (395 feet)	150 m (490 feet)	150 m (490 feet)	150 m (490 feet)	80 m (260 feet)	50 m (165 feet)	50 m (165 feet)	60 m (195 feet)	
1 mm² (Ø 1,2 mm AWG 17)	120 m (395 feet)	80 m (260 feet)	80 m (260 feet)	80 m (260 feet)	50 m (165 feet)	50 m (165 feet)	50 m (165 feet)	40 m (130 feet)	
1,5 mm² (Ø 1,4 mm AWG 15)	150 m (490 feet)	100 m (330 feet)	100 m (330 feet)	100 m (330 feet)	80 m (260 feet)	75 m (245 feet)	100 m (330 feet)	60 m (195 feet)	
2,5 mm² (Ø 1,8 mm AWG 13)	150 m (490 feet)	100 m (330 feet)	100 m (330 feet)	100 m (330 feet)	80 m (260 feet)	100 m (330 feet)	150 m (490 feet)	60 m (195 feet)	

Operating distances with video concentrator-amplifier Art. 4933

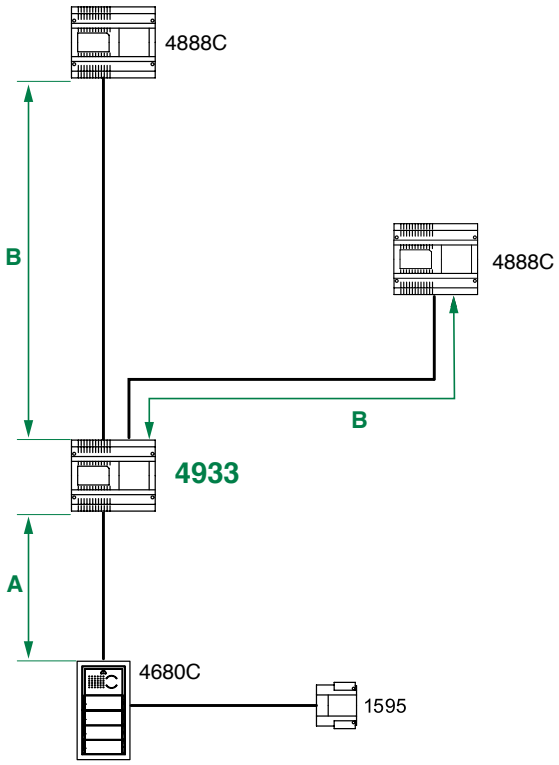

	A MAX	B MAX *	
		NORMAL GAIN	HIGH GAIN
Comelit Art. 4577/4579 1 mm² (Ø 1,2 mm AWG 17)	200 m (655 feet)	300 m (985 feet)	600 m (1965 feet)
Comelit Art. 4576/4578 0,5 mm² (Ø 0,8 mm AWG 20)	200 m (655 feet)	300 m (985 feet)	600 m (1965 feet)
UTP5 cat. 5 0,2 mm² (Ø 0,5 mm AWG 24)	150 m (495 feet)	200 m (655 feet)	300 m (985 feet)
0,28 mm² (Ø 0,6 mm AWG 23)	150 m (495 feet)	200 m (655 feet)	300 m (985 feet)
0,5 mm² (Ø 0,8 mm AWG 20)	100 m (325 feet)	200 m (655 feet)	300 m (985 feet)
1 mm² (Ø 1,2 mm AWG 17)	150 m (495 feet)	200 m (655 feet)	300 m (985 feet)
1 mm² (Ø 1,2 mm AWG 17)	80 m (260 feet)	100 m (325 feet)	150 m (495 feet)
1,5 mm² (Ø 1,4 mm AWG 15)	150 m (495 feet)	200 m (655 feet)	300 m (985 feet)

* In some situations and for greater distances, amplifiers Art. 1236 and/or Art.4833C may be required. For further information please contact **Comelit Group S.p.A.**

Maximum system expansion

Devices	 6700W 6701W(/BM) 6701B(/BM)	 6721W(/BM)	 6601W(/BM)	 6801W(/BM)	 6741W(/BM)
Maximum number of internal units that can be powered from Art. 4888C	**100**	**100**	**100**	**100**	**100**✱ **(**4888C with R.I. ≥053**)** **50**✱ (4888C with R.I. ≥021 ≤052)
Call repetition devices that can be used	**1229A**	**1229A**	**1229A** **1229#**	**1229A** **1229#**	**1229A**

✱ For further information, see the manual of Art. 6741W

\# For installation information and limits, consult the relative manual.

Maximum expansion per apartment

Devices	 6700W 6701W(/BM) 6701B(/BM)	 6721W(/BM)	 6601W(/BM)	 6801W(/BM)	 6741W(BM)
Maximum number of internal units (including call repetition devices) with the same user code	**4**	**4**	**3**	**4**	**1**✱
Maximum number of main internal units powered from the riser	**2**	**2**	**2**	**2**	**1**
Maximum number of main internal units that can be powered from Art. 1212/B	**/**	**/**	**1**	**2**	**/**

✱ A single **6741W(/BM)** monitor can be installed for each user code; this will also be the only main monitor.
Up to 3 secondary monitors can be added (6700W, 6701W (/BM), 6701B (/BM), 6721W (/BM), 6601W(/BM), 6801W (/BM)).

Example of maximum expansion per apartment

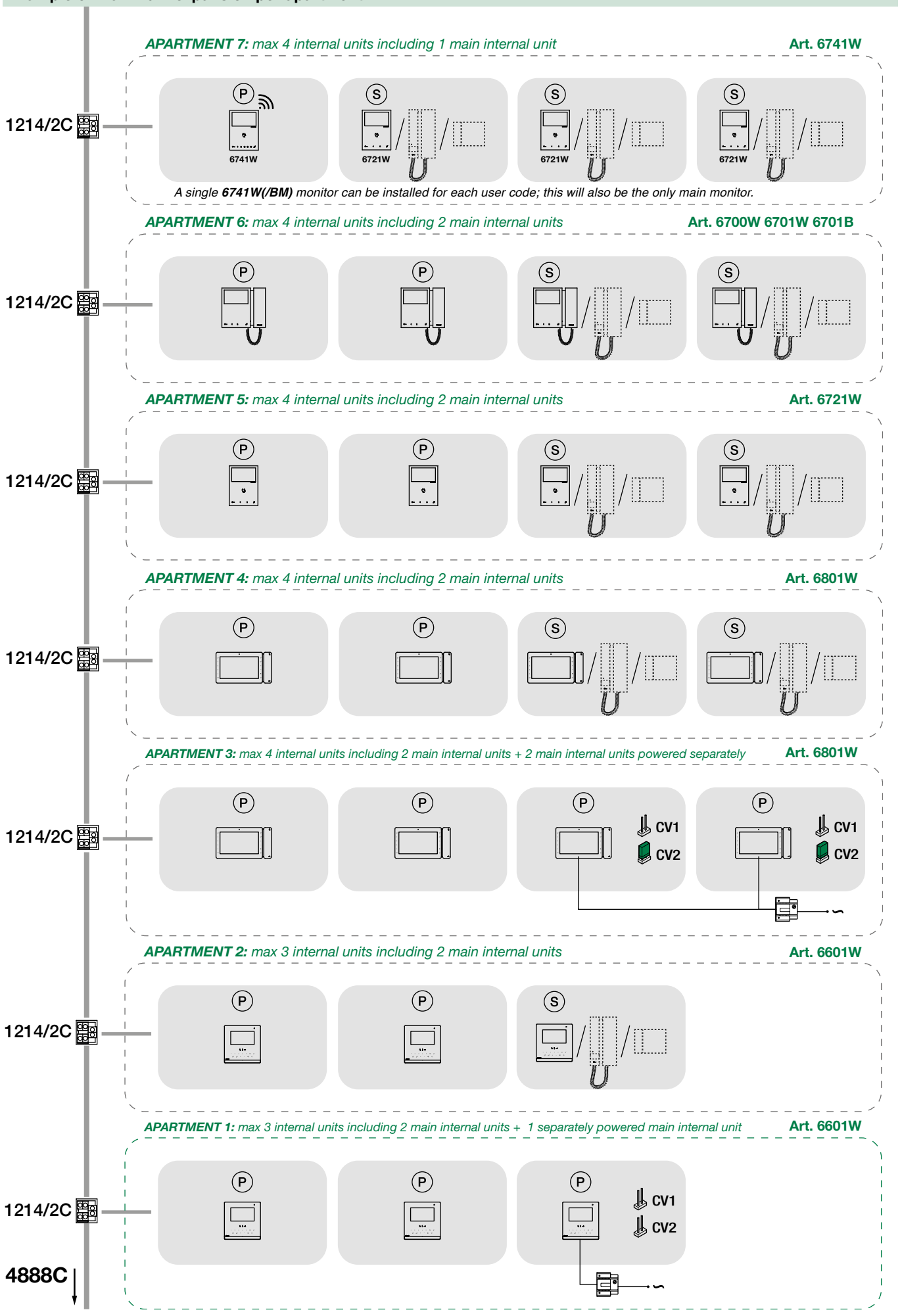

Wiring diagrams

System with a single riser

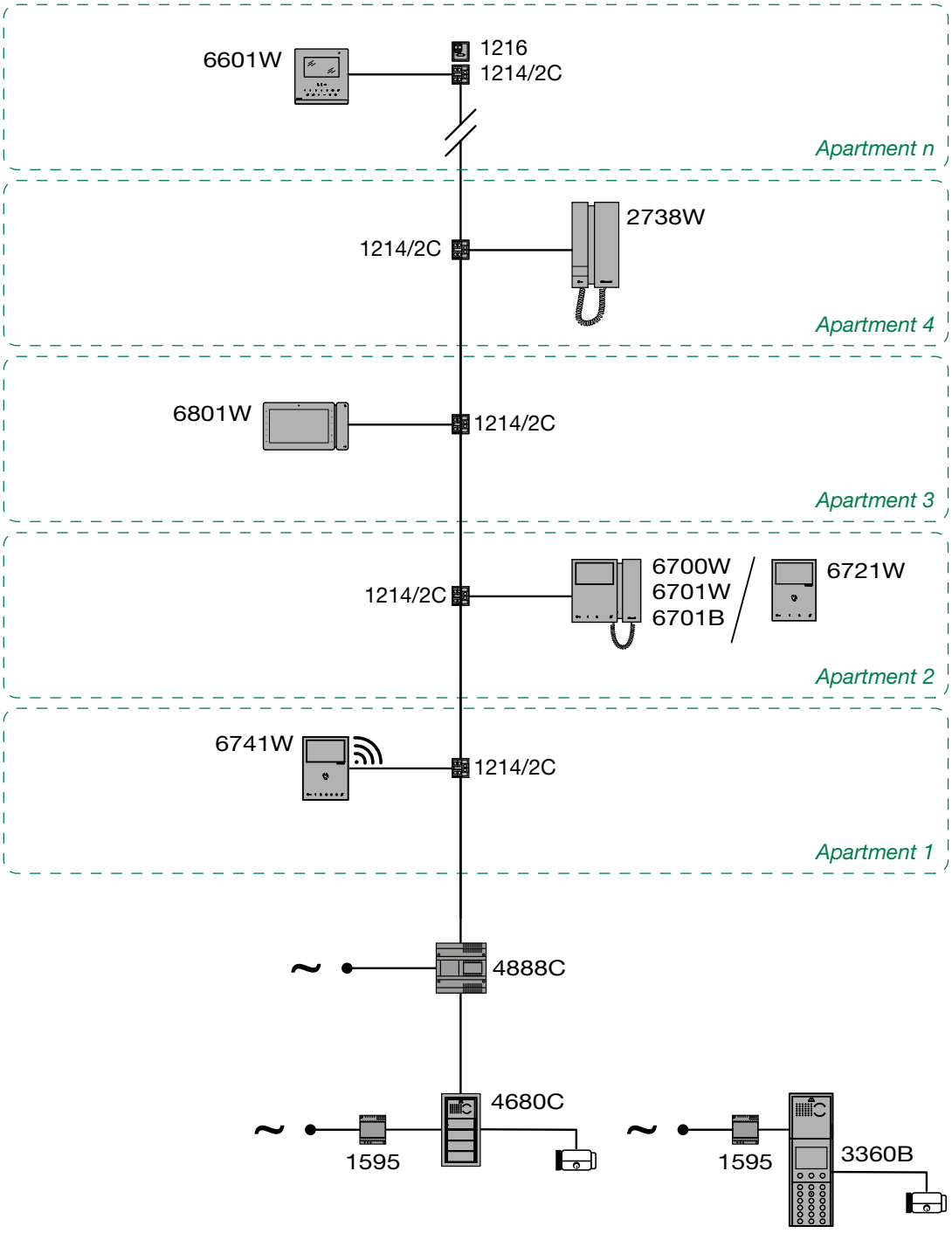

VIDEO ENTRY SYSTEM RISER

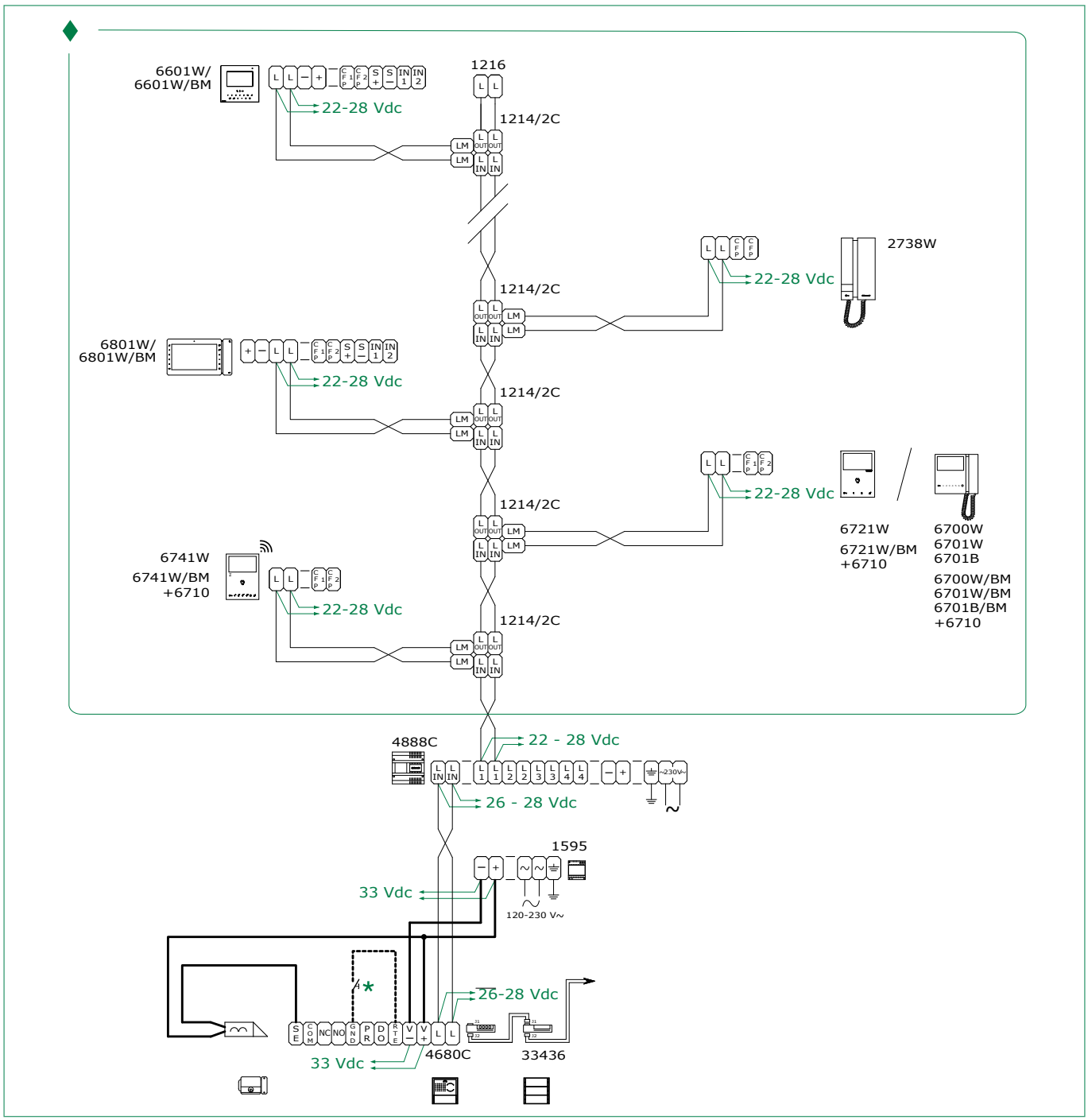

* **20 m MAX.** Local lock-release button.

Variant with Digital External Unit

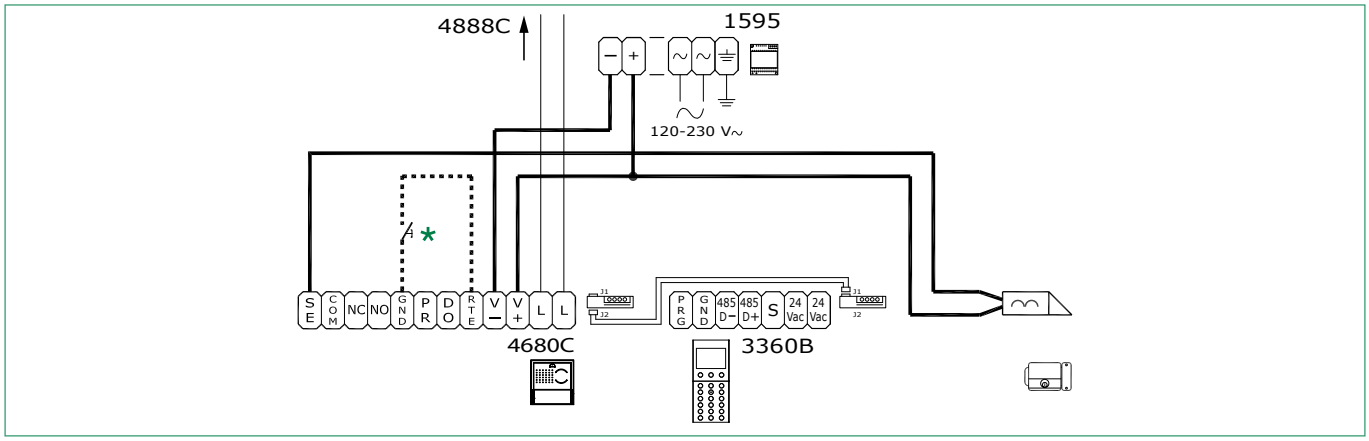

* **20 m MAX.** Local lock-release button.

Video entry phone system for condominiums with 1 to 4 risers with 2 external units

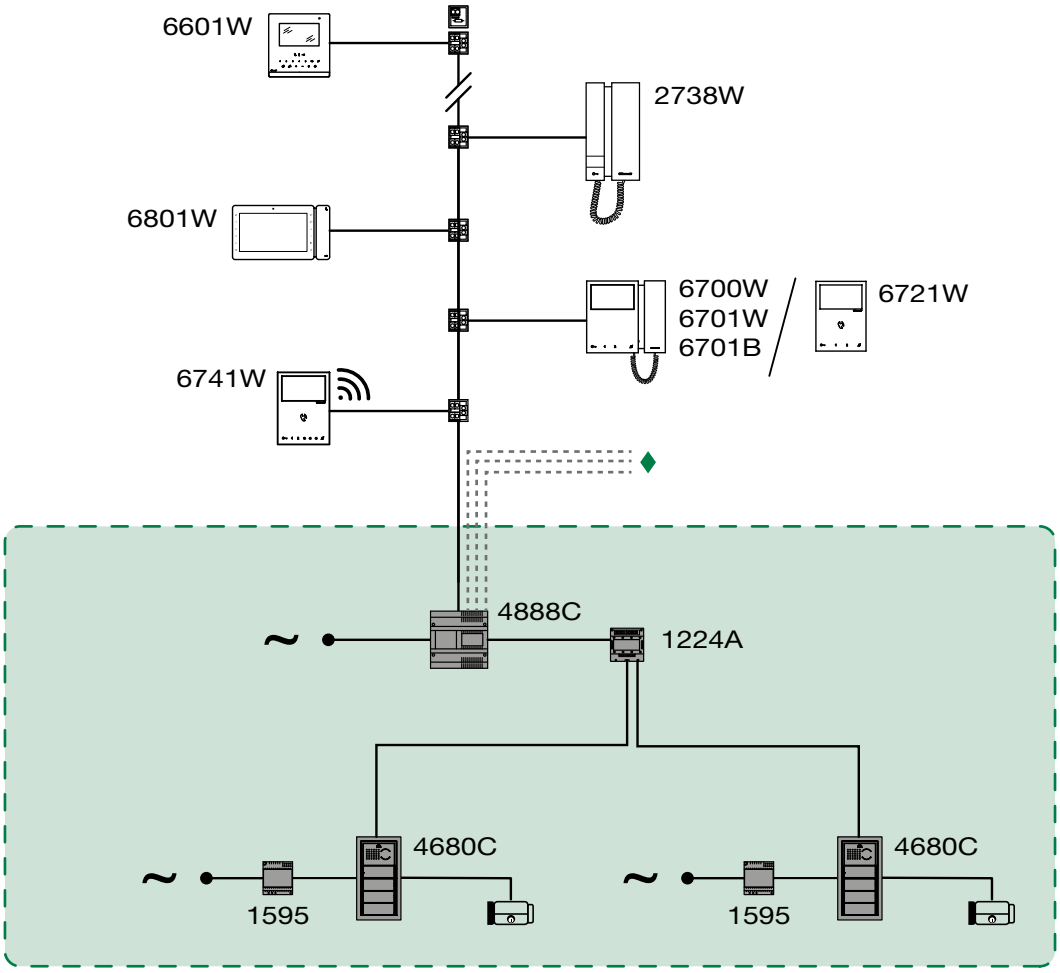

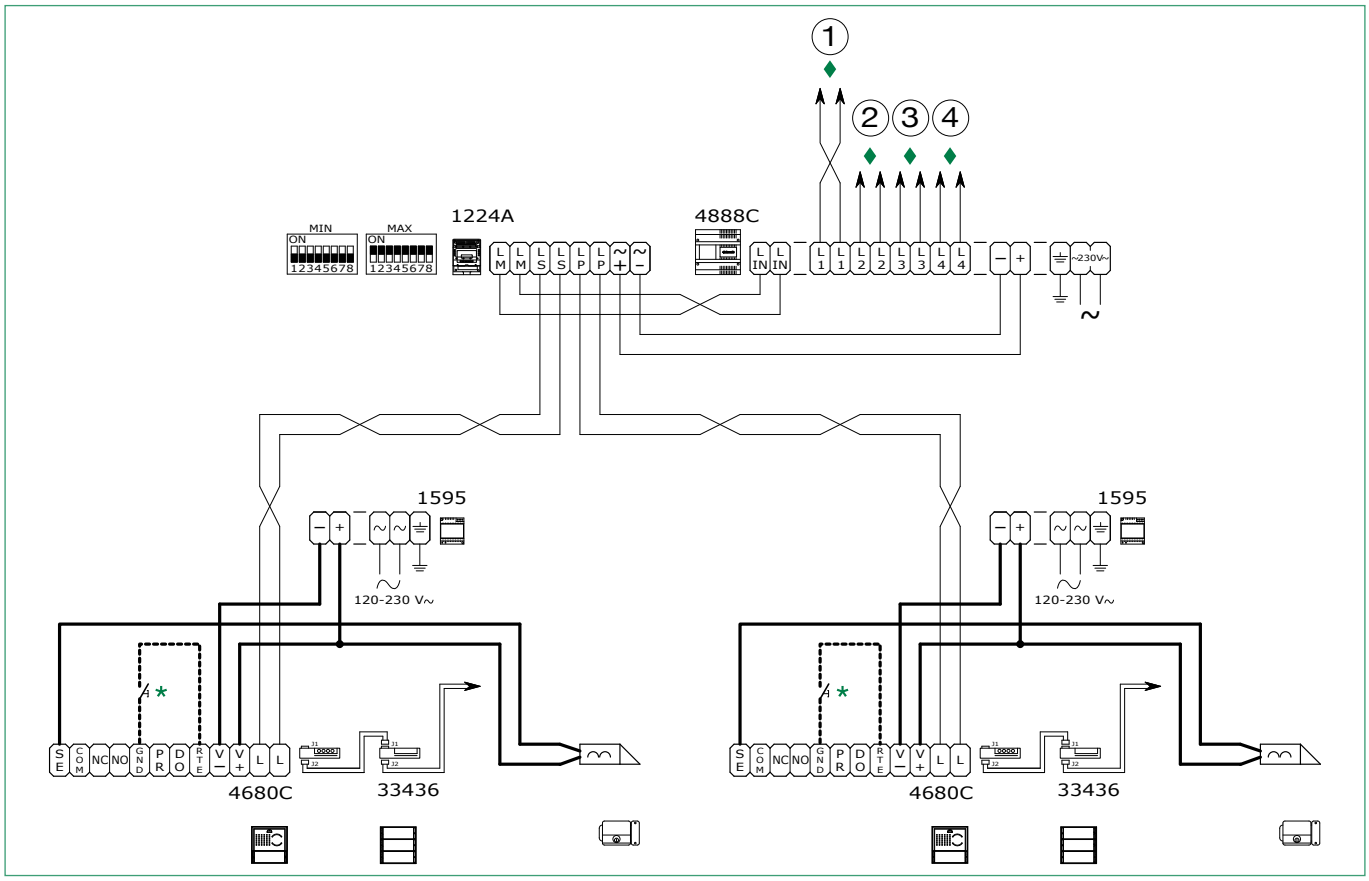

♦ Video door entry system riser (see: **"VIDEO ENTRY SYSTEM RISER"**)

✱ **20 m MAX.** Local lock-release button.

Video entry phone system for condominiums with more than 4 risers

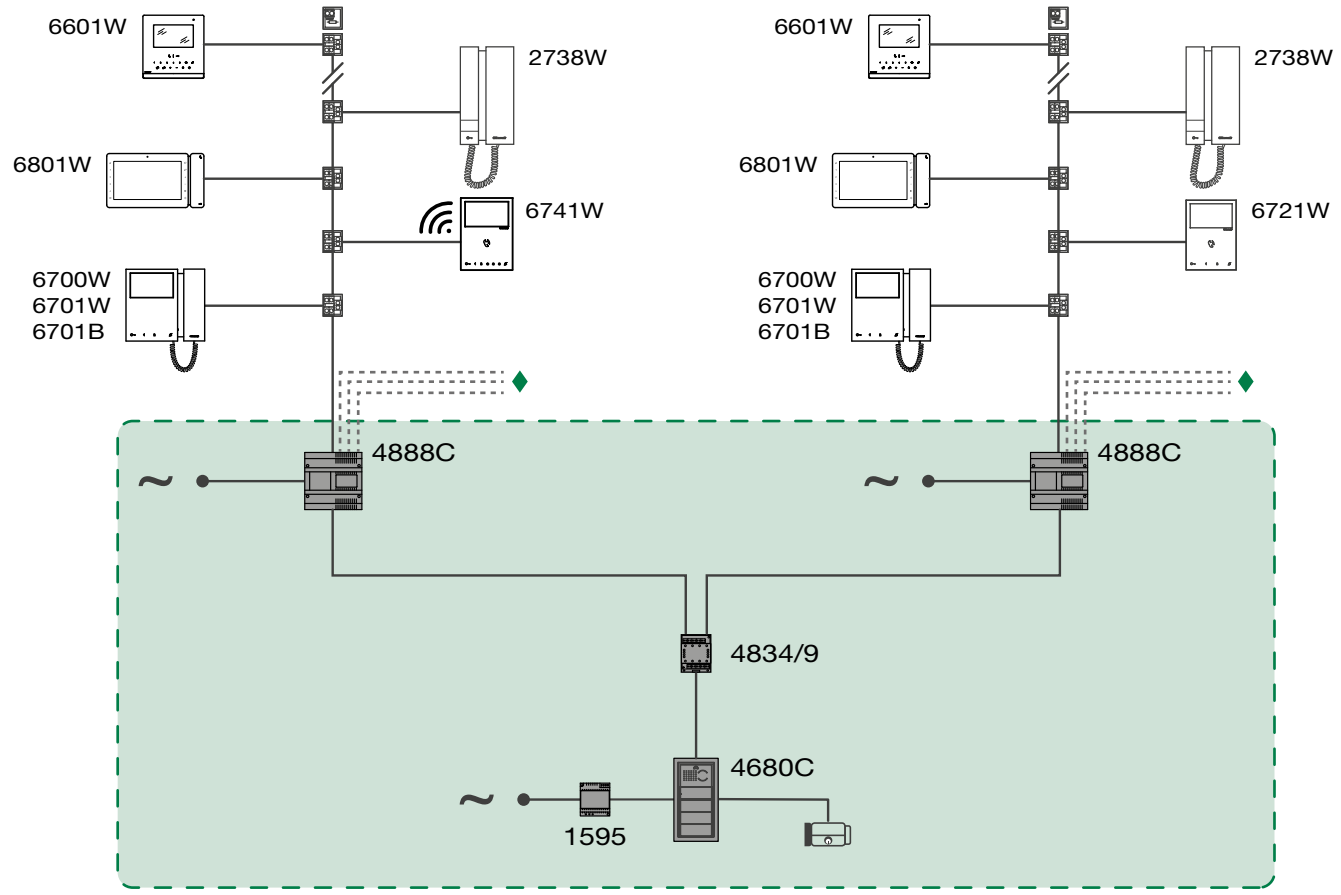

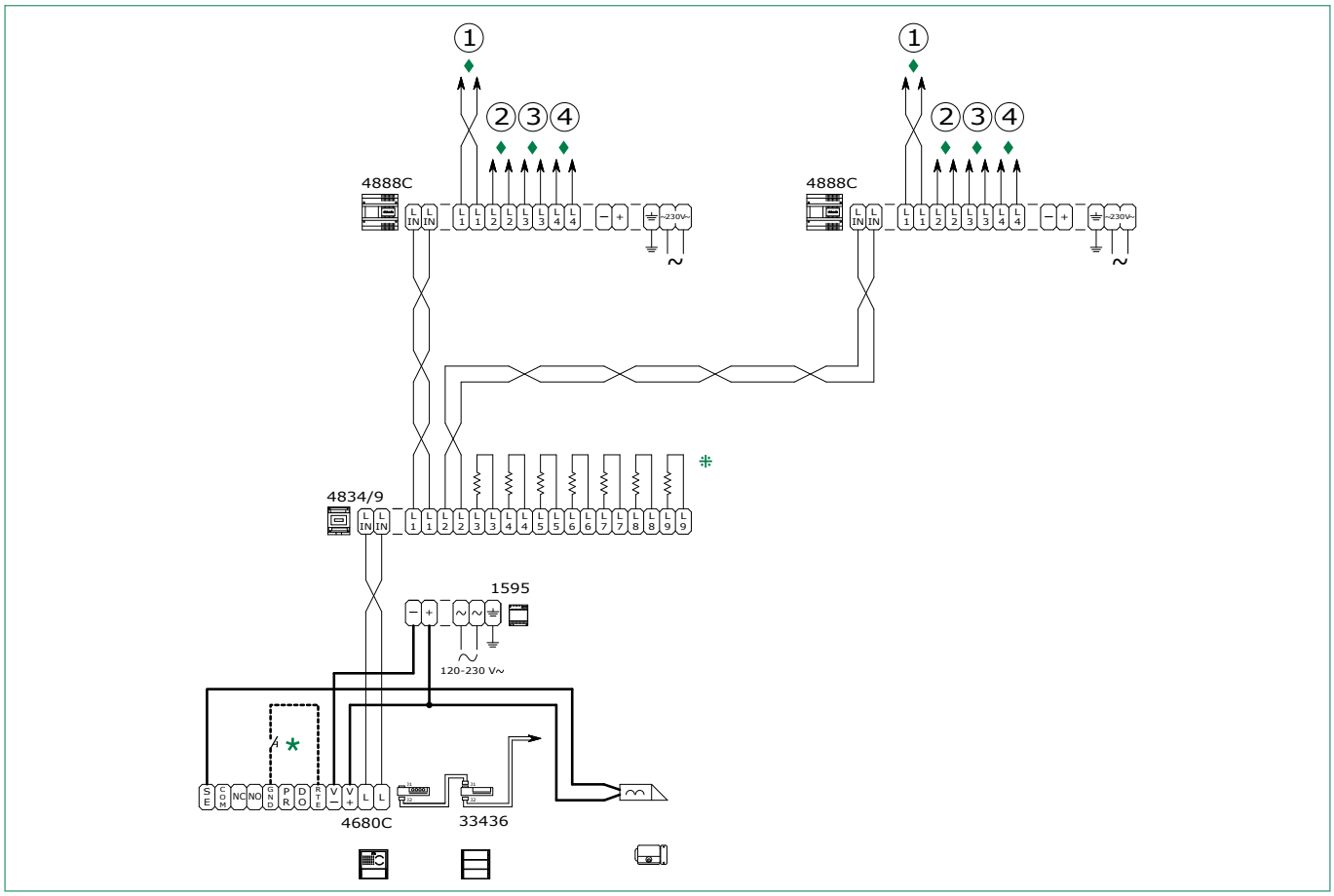

♦ Video door entry system riser (see: **"VIDEO ENTRY SYSTEM RISER"**)

✱ **20 m MAX.** Local lock-release button.

⁜ Only cut off the resistance of the output used.

System with 1 main video entrance panel (max 9 secondary video units)

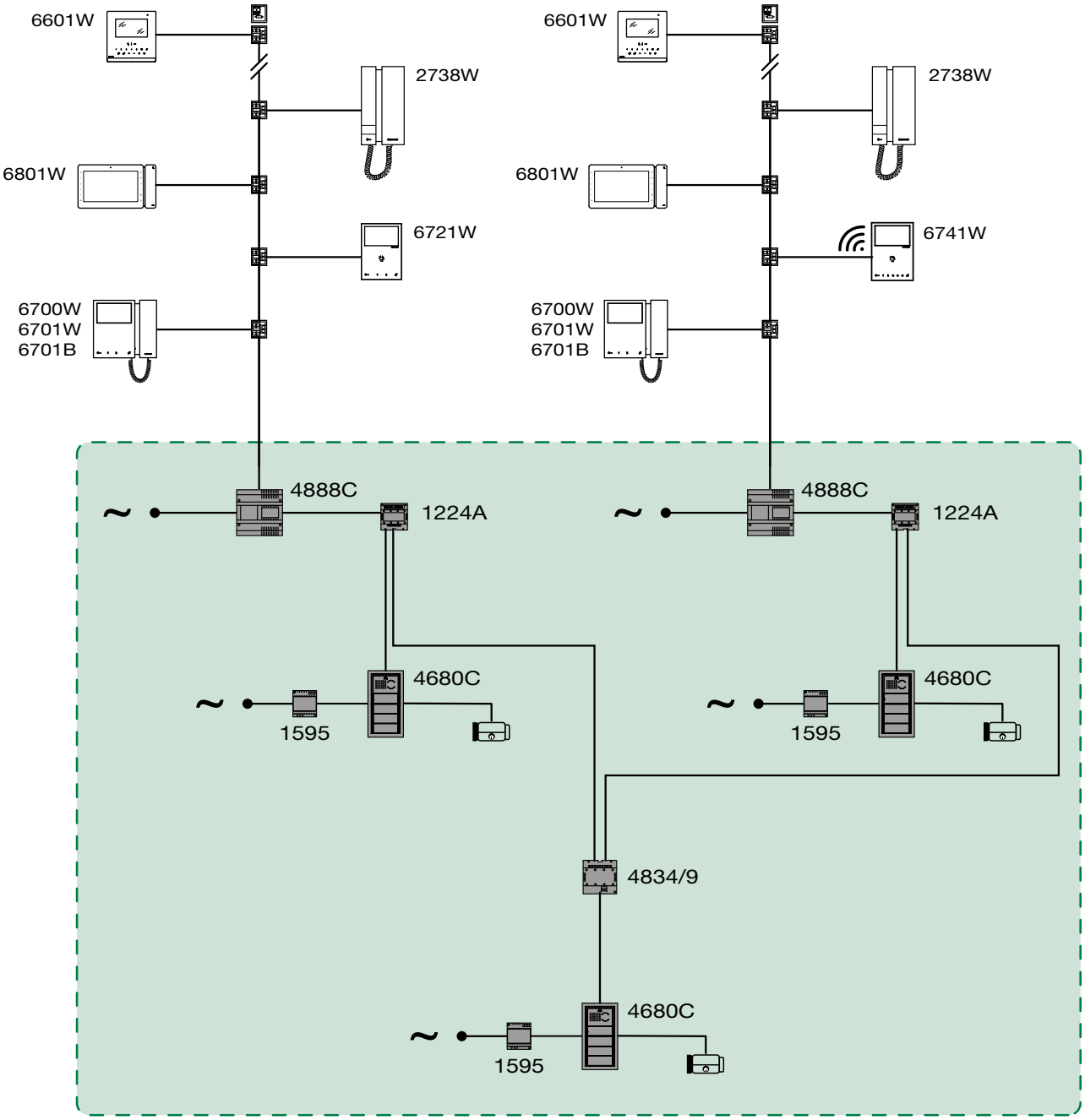

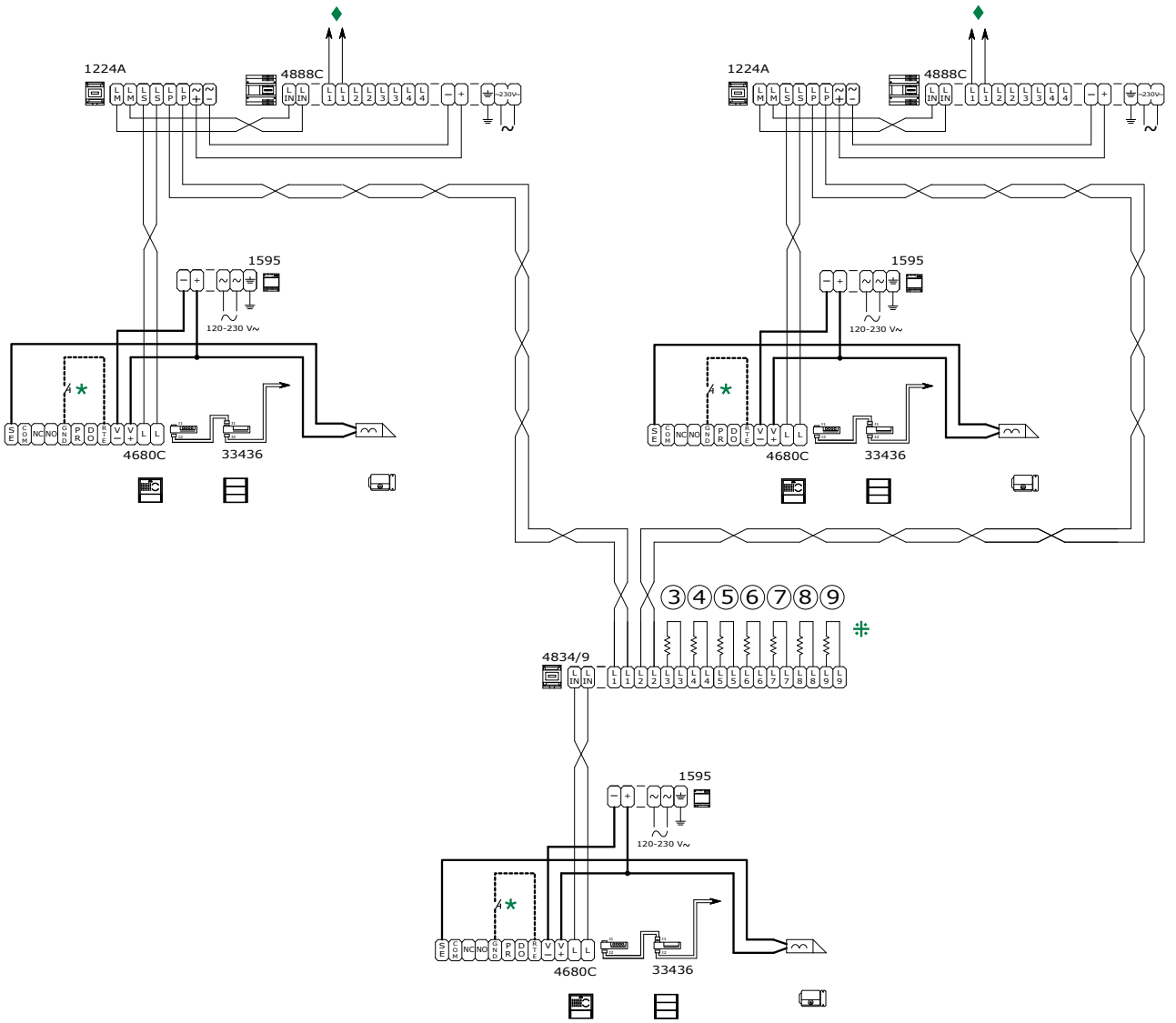

♦ Video door entry system riser (see: **"VIDEO ENTRY SYSTEM RISER"**)

✱ **20 m MAX.** Local lock-release button.

⌗ Only cut off the resistance of the output used.

Connection in cascade Art. 4834/9.

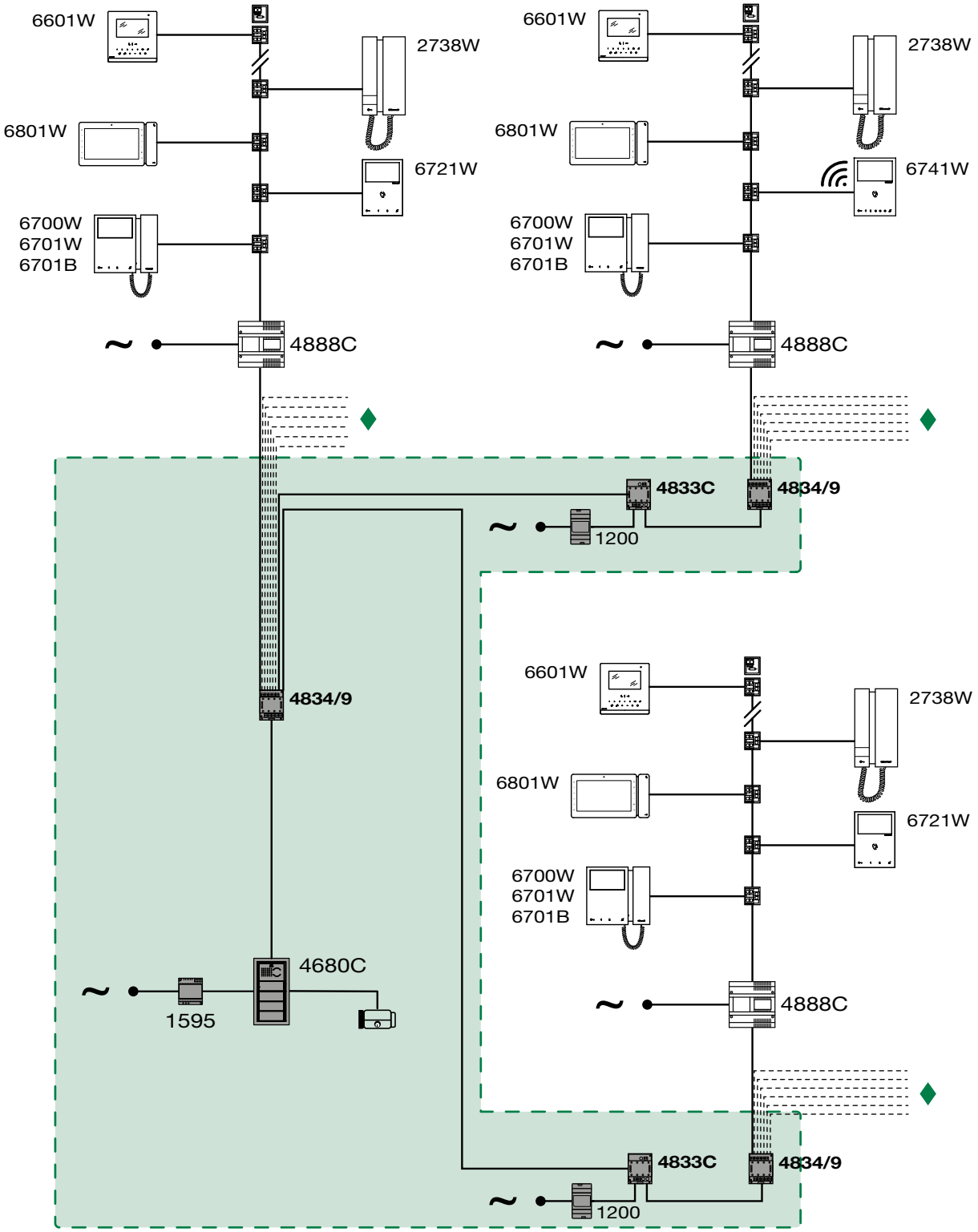

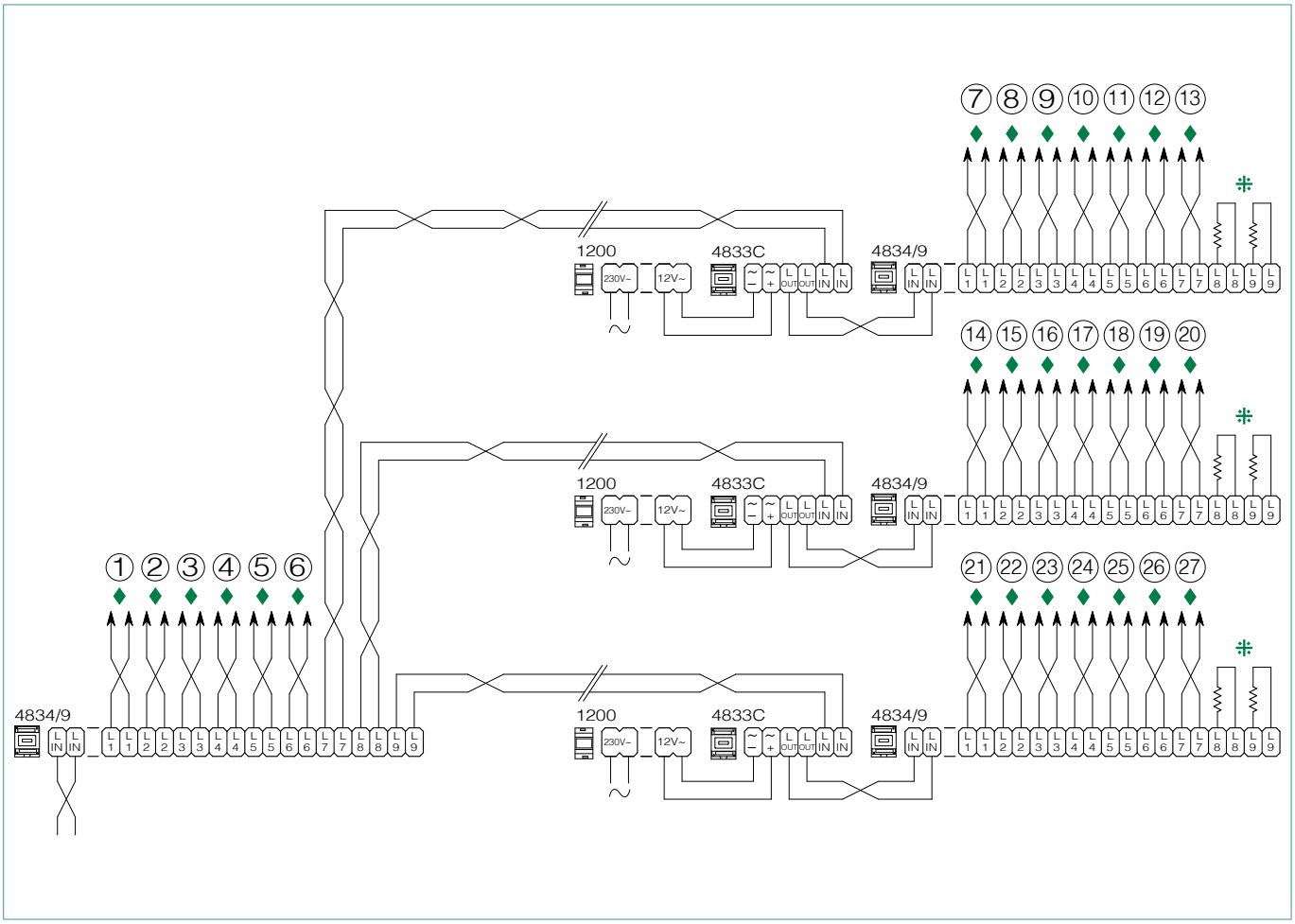

♦ Video door entry system riser (see: **"VIDEO ENTRY SYSTEM RISER"**)

⁜ Only cut off the resistance of the output used.

Connection of amplifier Art. 4833C

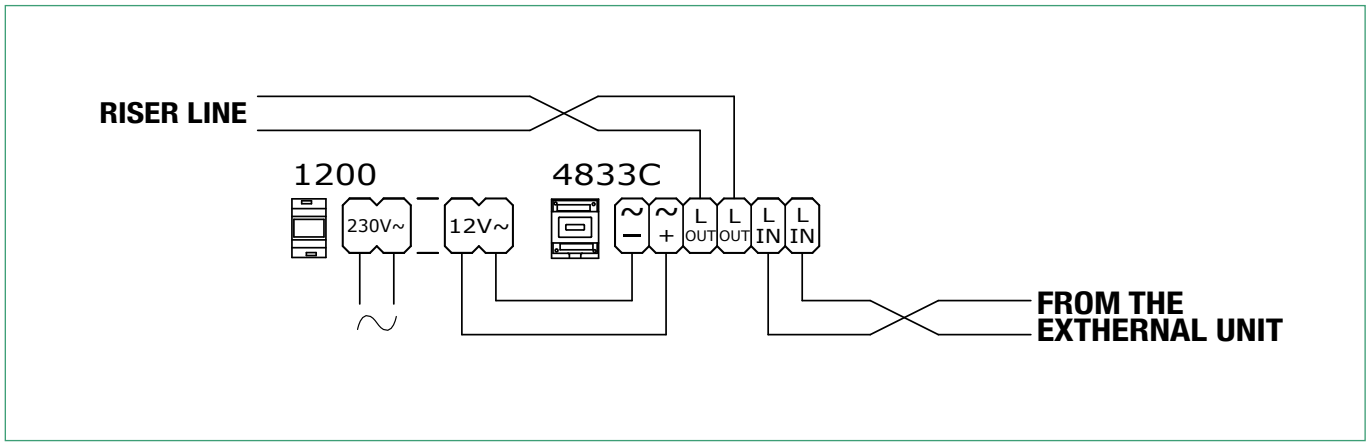

Connection in cascade with several internal units (up to 25 per branch from Art. 4888C)

In the case of connection in cascade, the **MAX** number of internal units (monitors or telephones) that can be connected for each riser branch of the Mixer-power supply Art. 4888C is 25. Each door-entry phone Art. 2738W and Art. 6750W must be preceded by an Art. 1214/2C. For the maximum distances permitted between the furthest internal unit and the Mixer-power supply Art. 4888C according to the cables used, please refer to the column **A** in the **"Operating distances"** table.

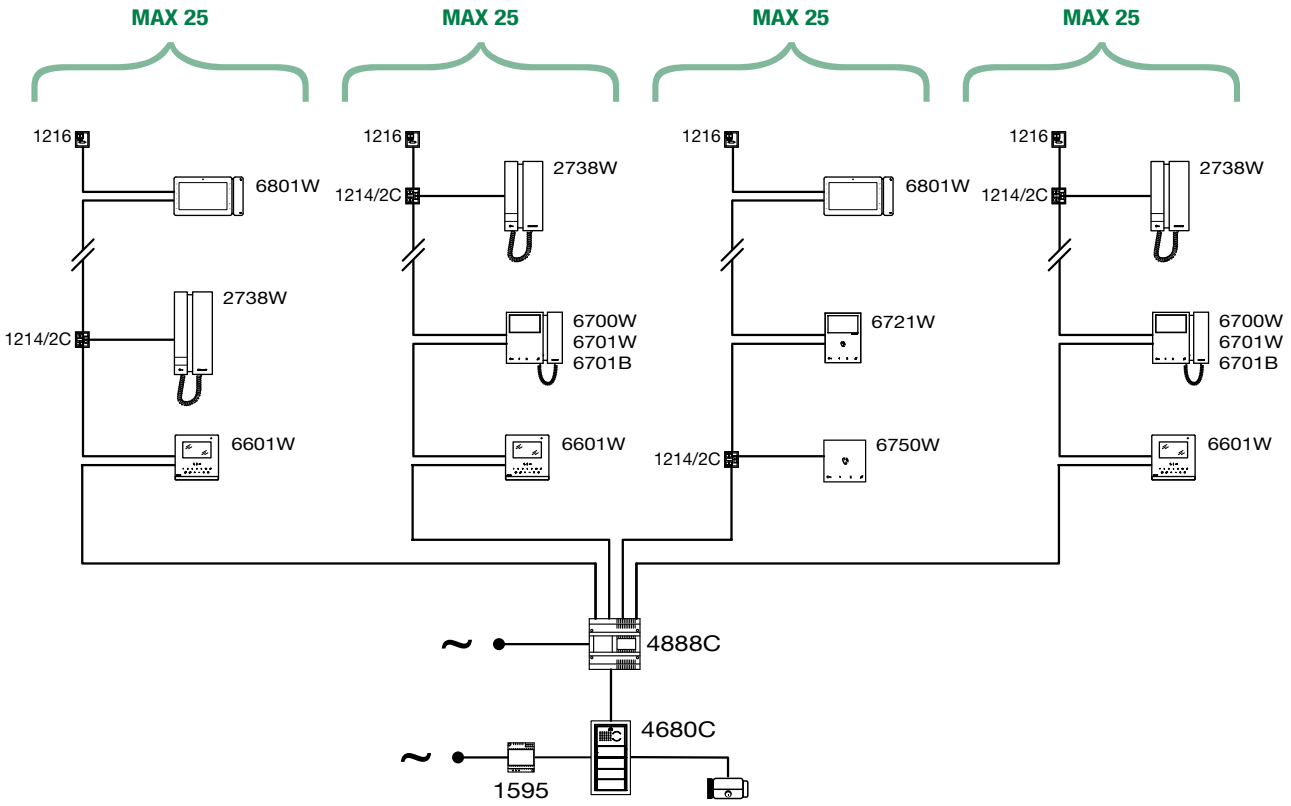

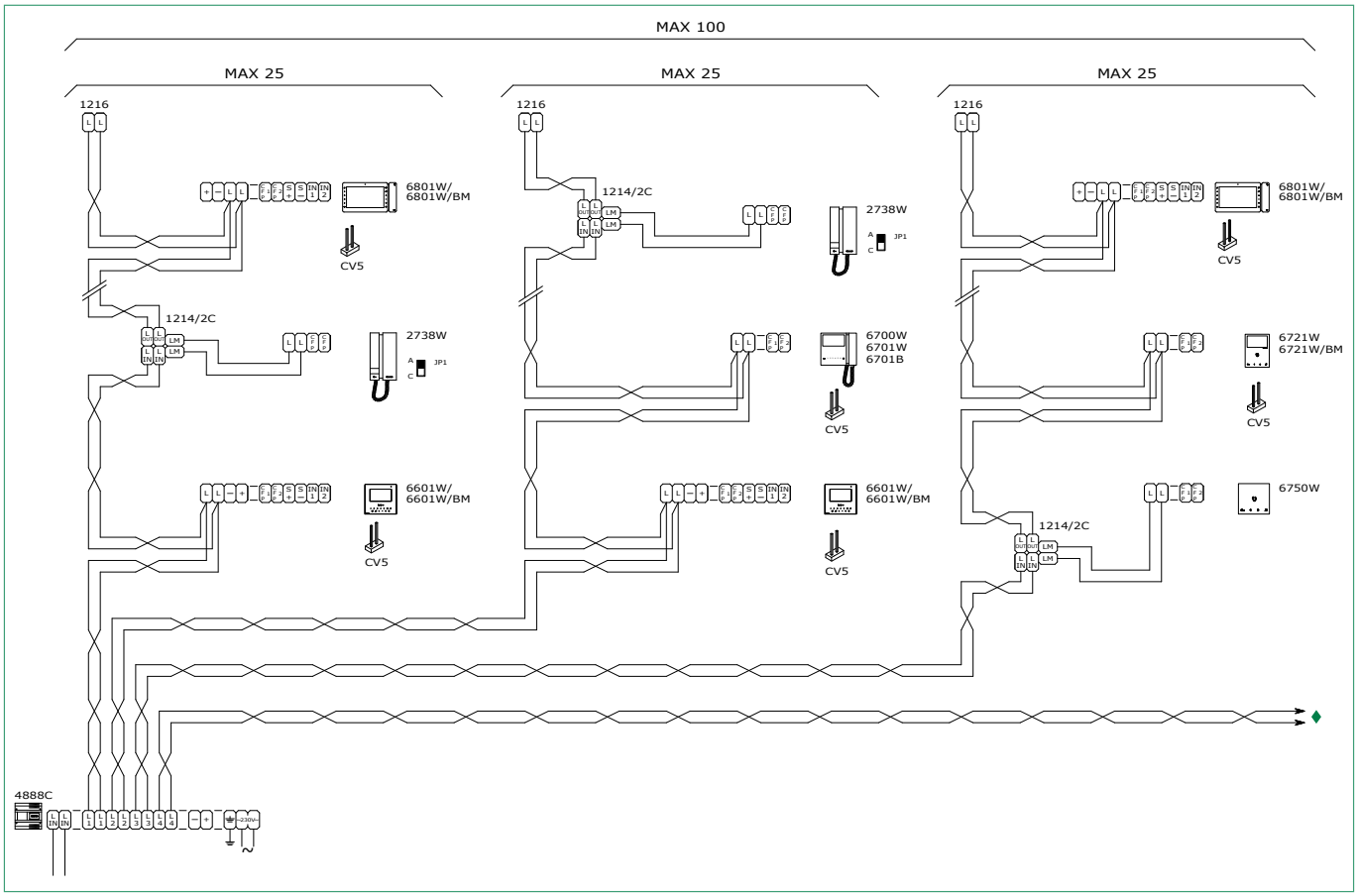

Video door entry system with 1 main entrance and porter switchboard

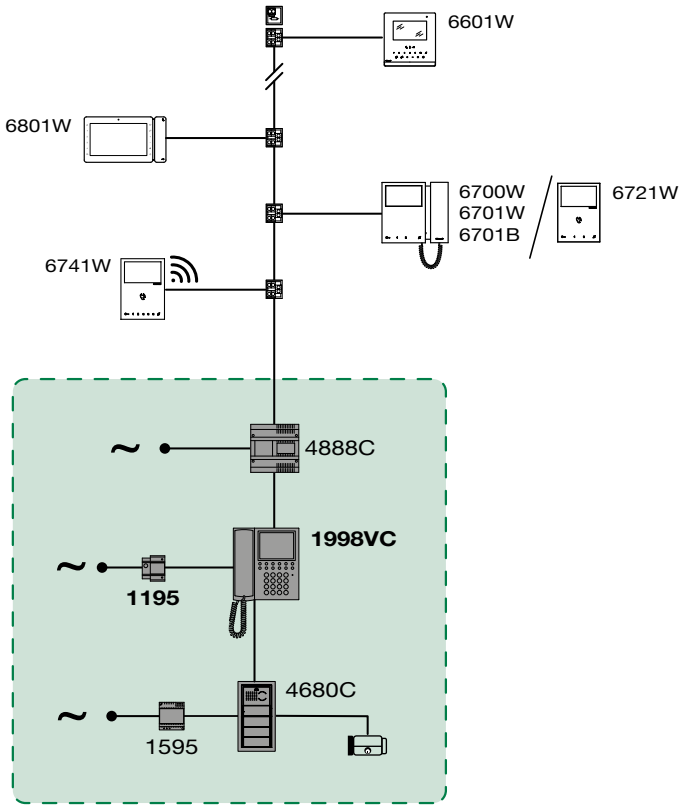

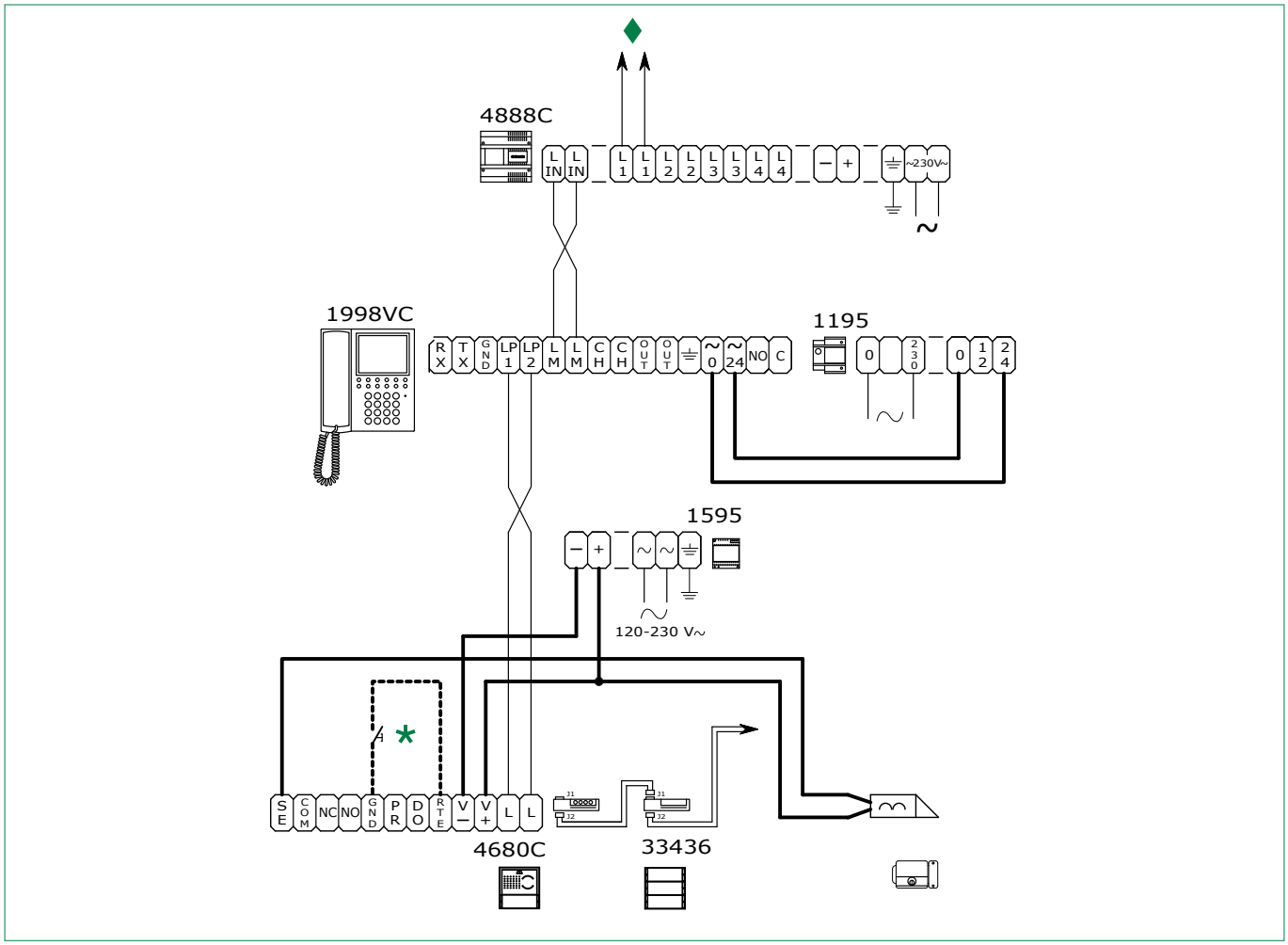

♦ Video door entry system riser (see: **"VIDEO ENTRY SYSTEM RISER"**)

✱ **20 m MAX.** Local lock-release button.

Video door entry system with 2 main entrances and porter switchboard

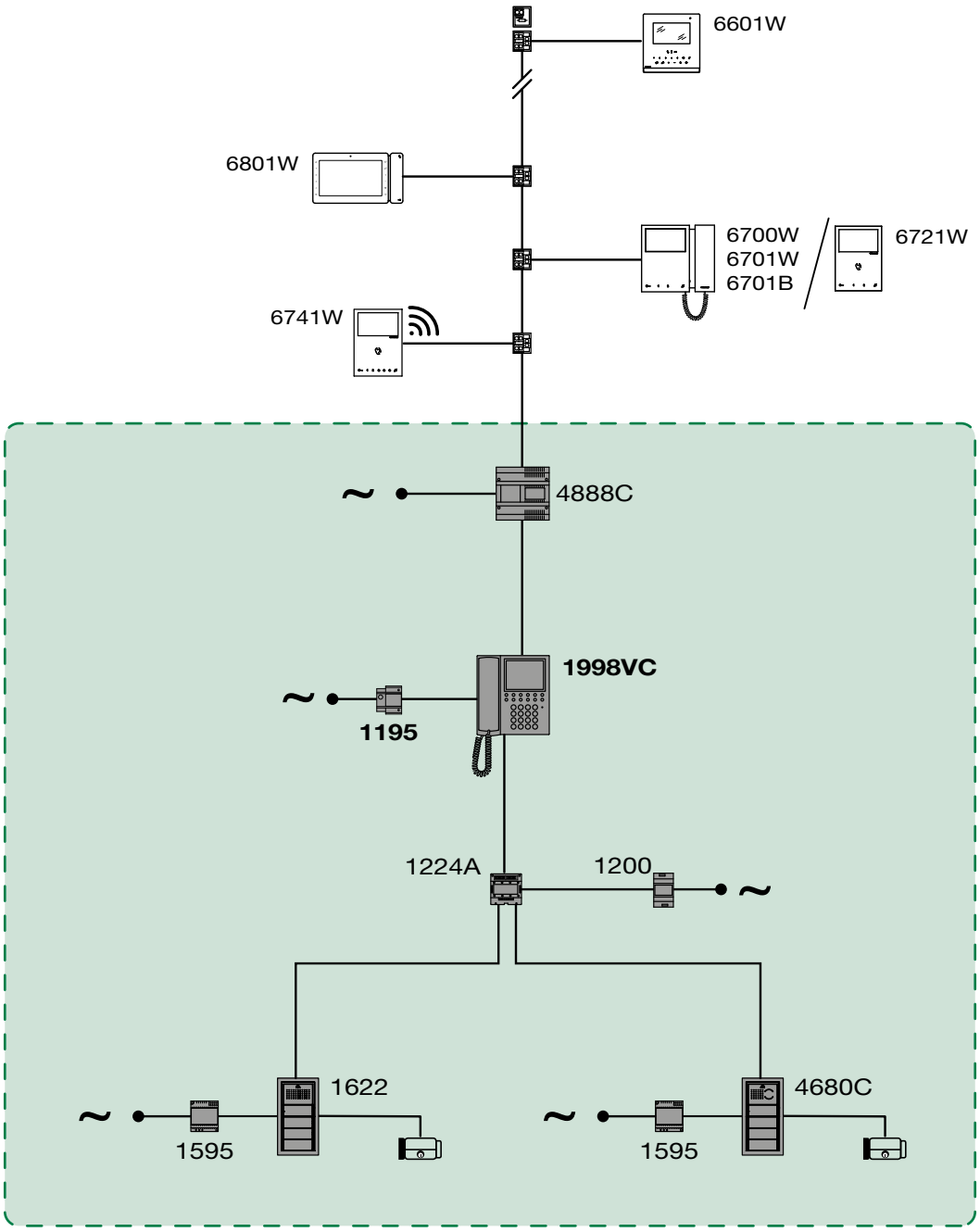

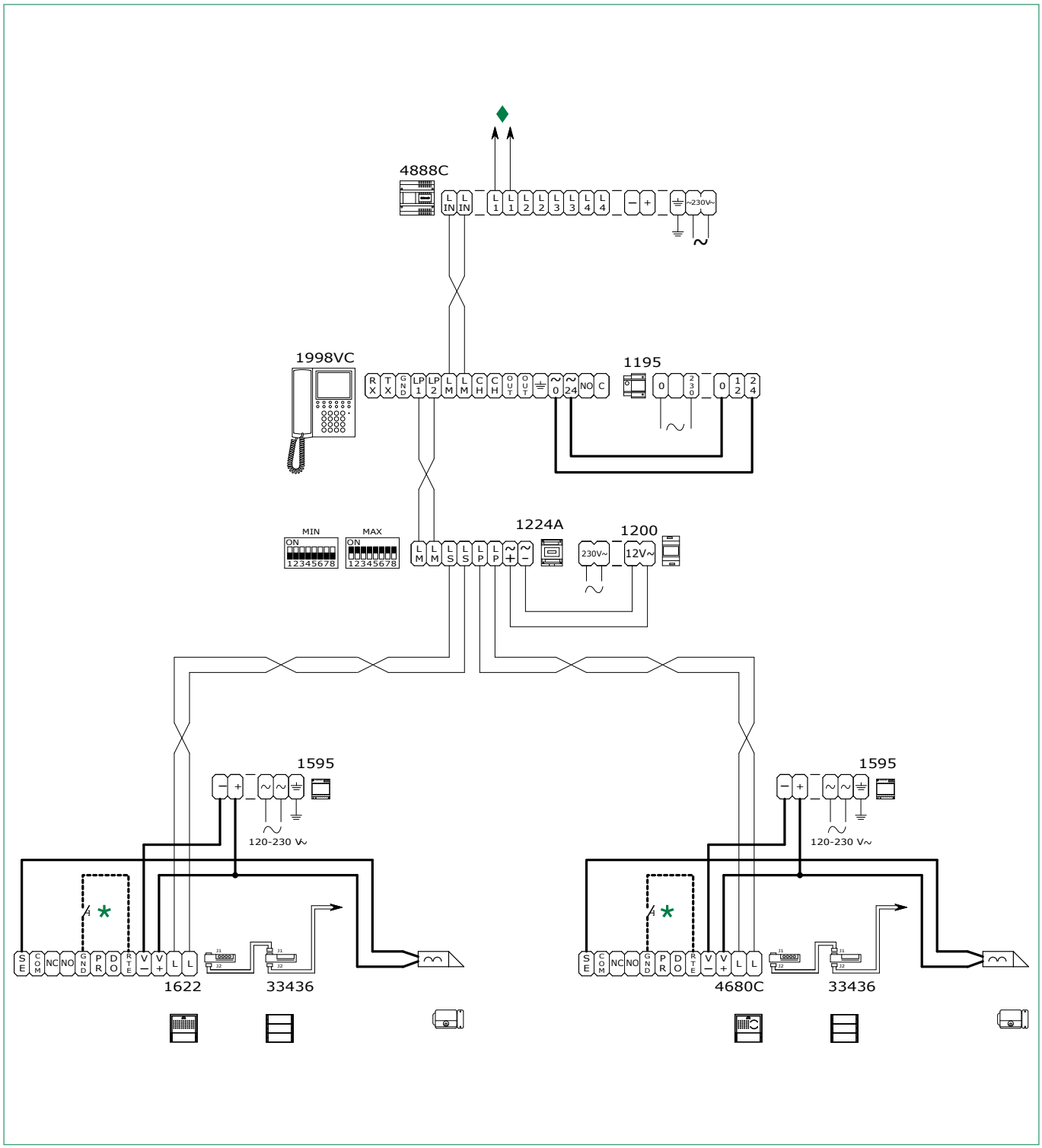

♦ Video door entry system riser (see: **"VIDEO ENTRY SYSTEM RISER"**)

✱ **20 m MAX.** Local lock-release button.

Video door entry system with 1 main entrance, 3 secondary video units and porter switchboard

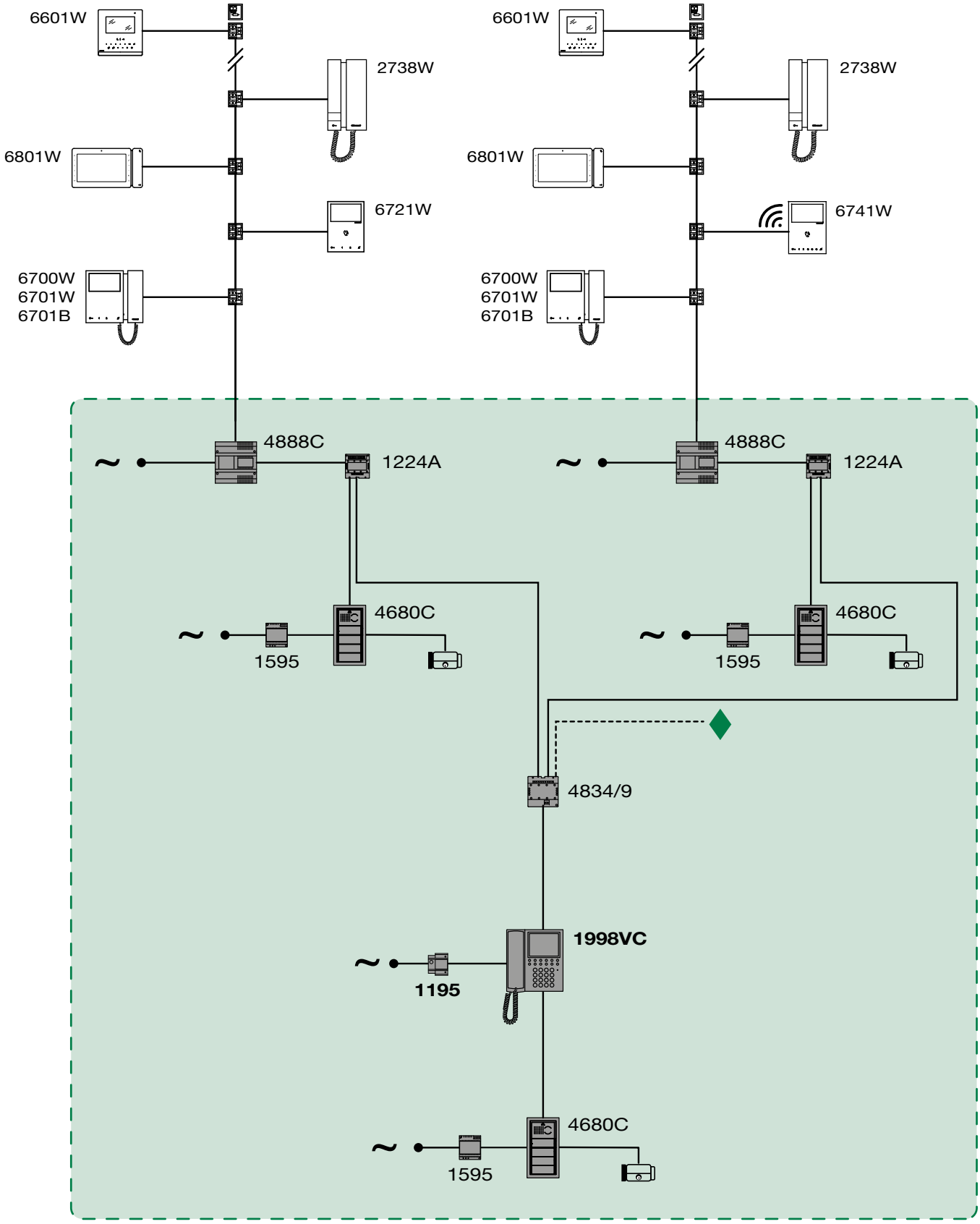

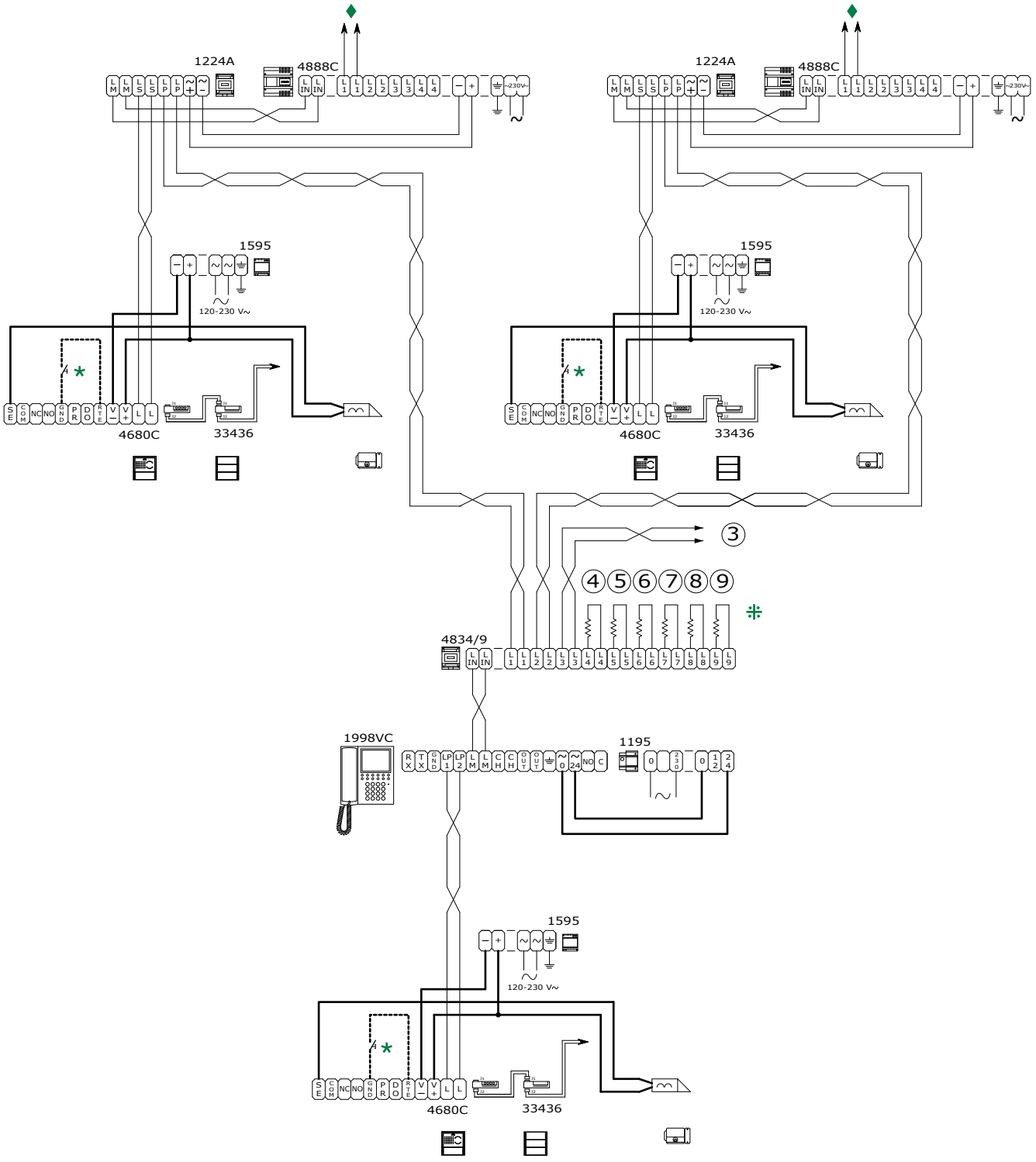

♦ Video door entry system riser (see: **"VIDEO ENTRY SYSTEM RISER"**)

✱ **20 m MAX.** Local lock-release button.

⁜ Only cut off the resistance of the output used.

Video door entry system with 2 main entrances, 3 secondary audio units and porter switchboard

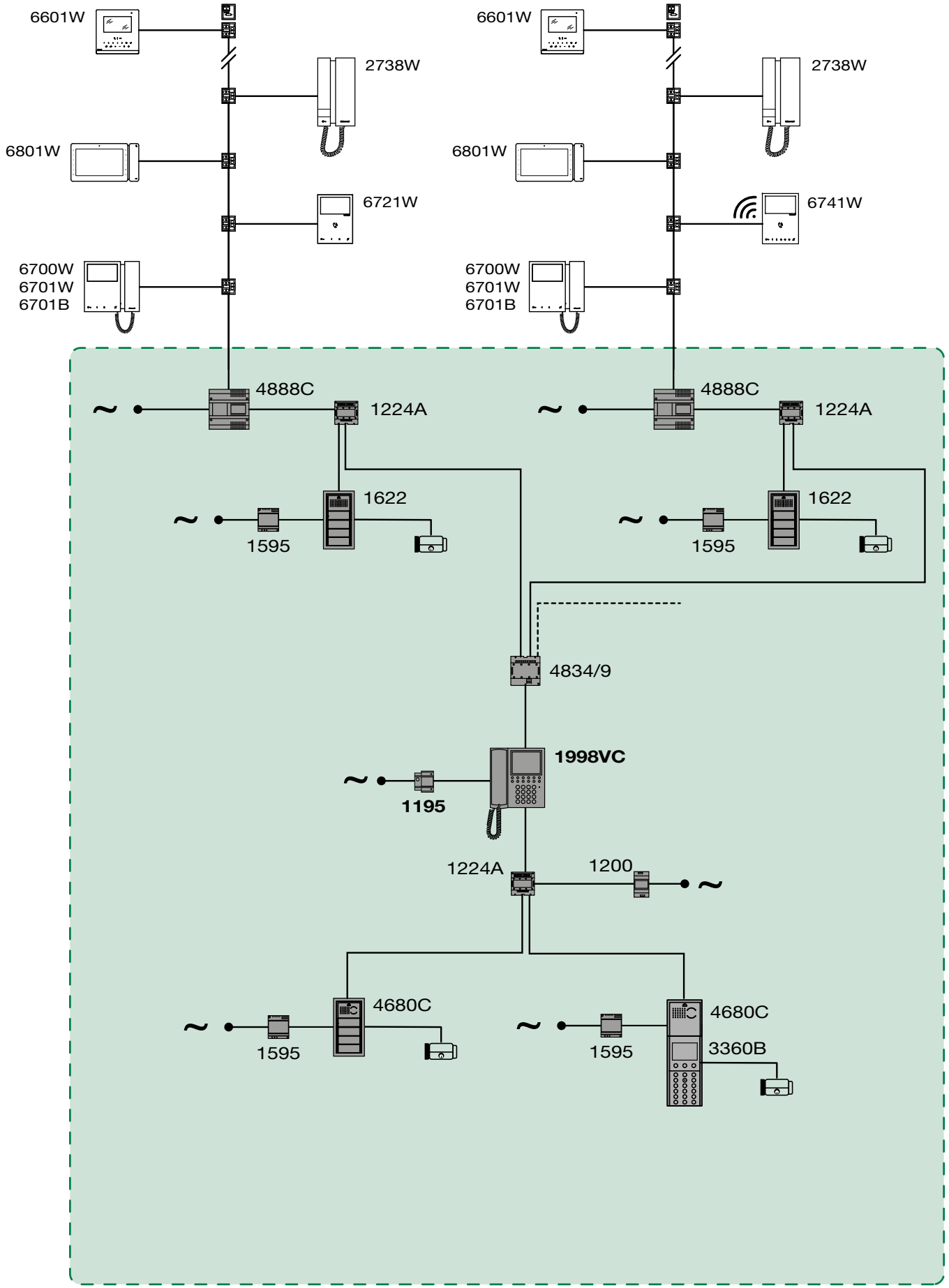

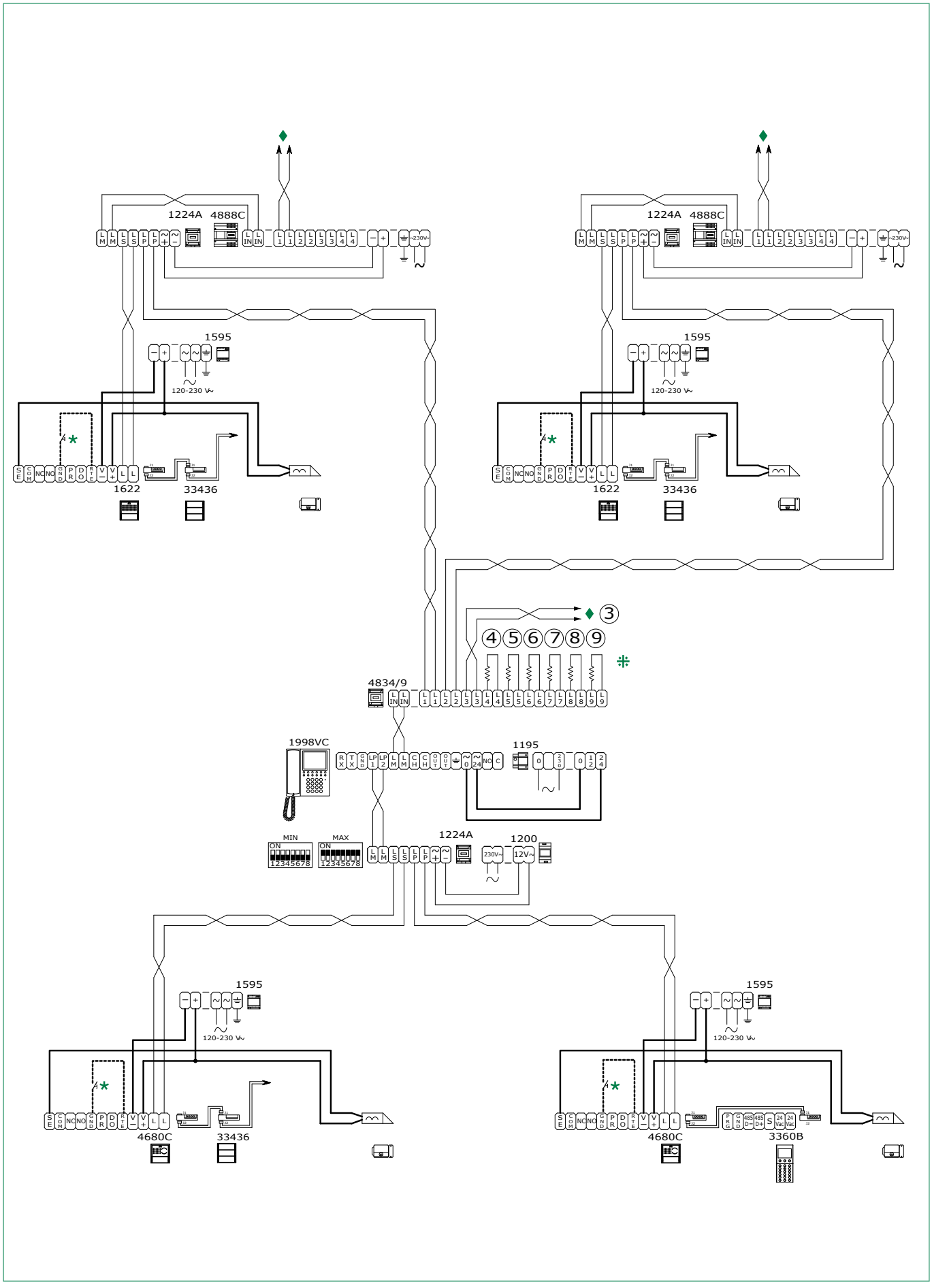

♦ Video door entry system riser (see: **"VIDEO ENTRY SYSTEM RISER"**)

✱ **20 m MAX.** Local lock-release button.

⁜ Only cut off the resistance of the output used.

Simplebus TOP video entry phone system with 1 main entrance, 4 secondary entrances and the relative secondary porter switchboards

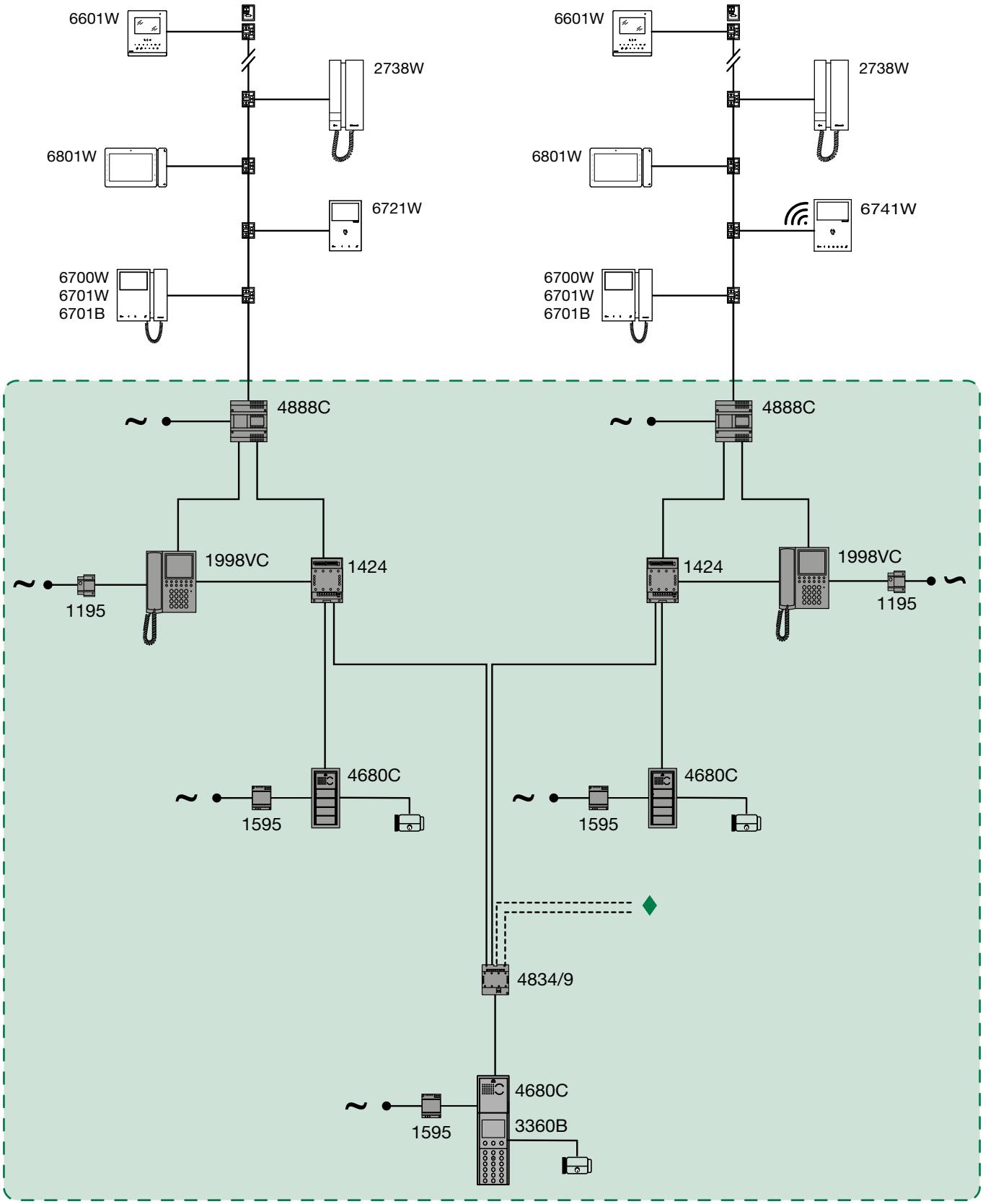

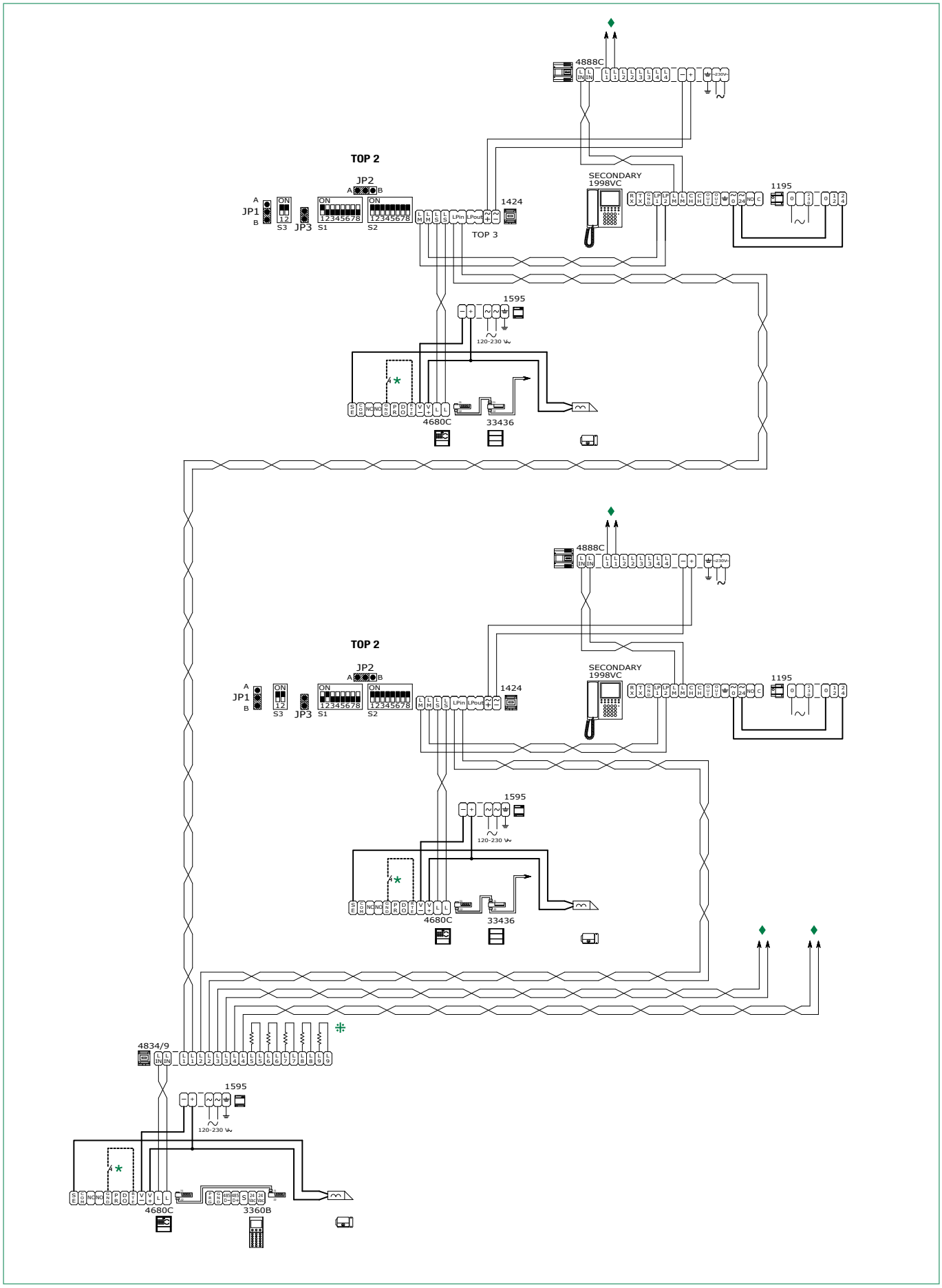

♦ Video door entry system riser (see: **"VIDEO ENTRY SYSTEM RISER"**)

✱ **20 m MAX.** Local lock-release button.

⁜ Only cut off the resistance of the output used.

Simplebus TOP video entry phone system with 2 main entrances, 4 secondary entrances and main porter switchboard

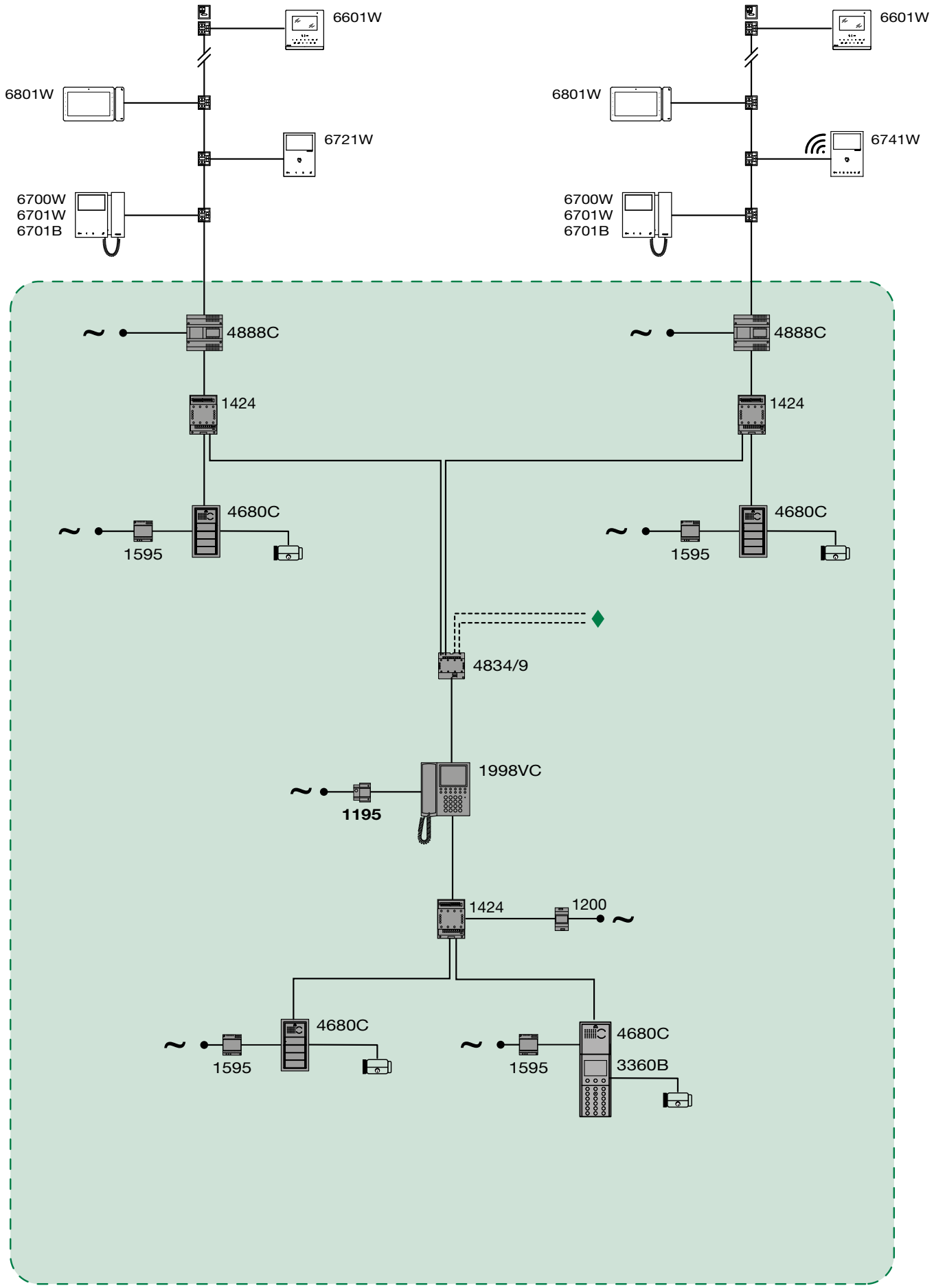

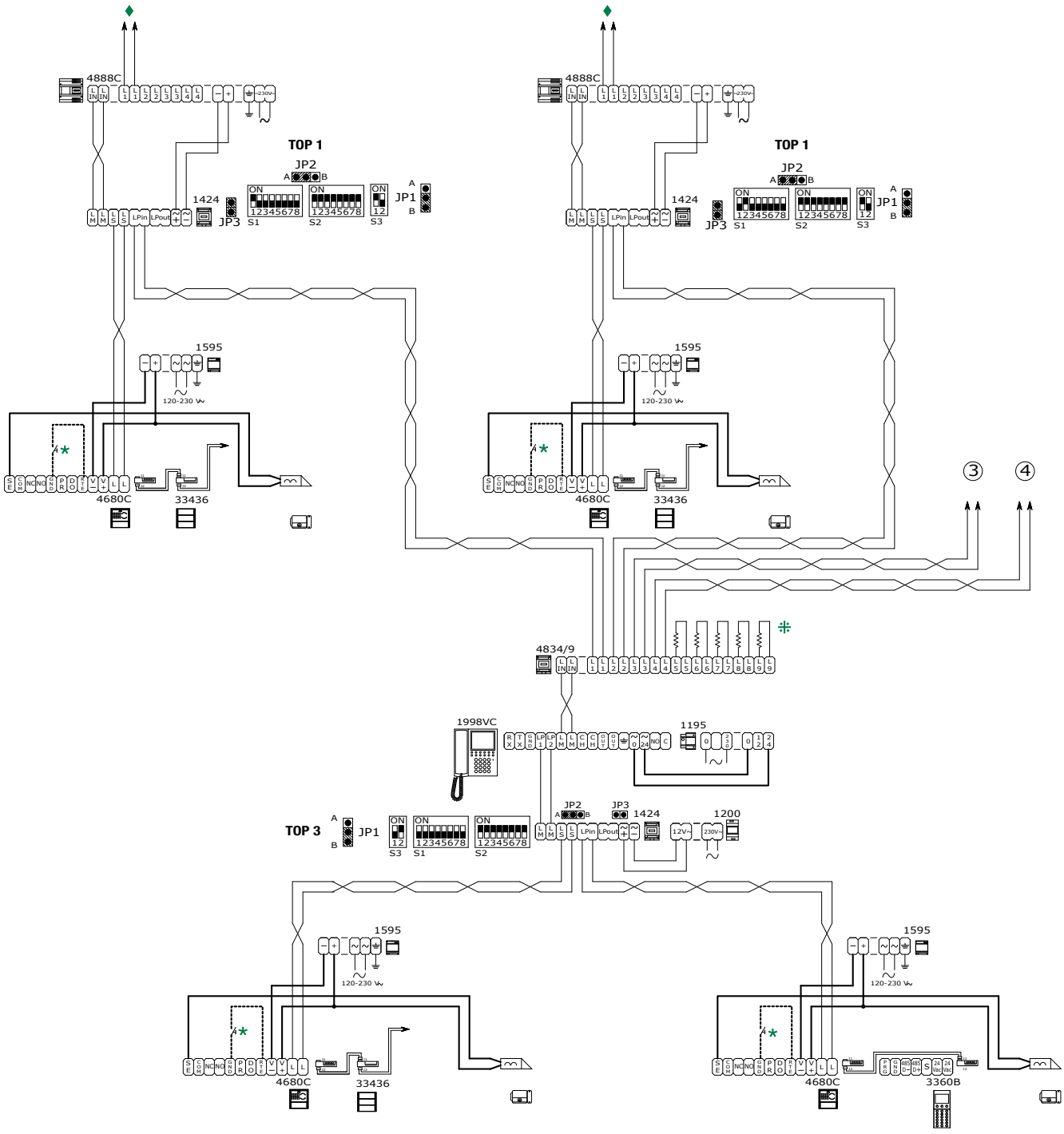

♦ Video door entry system riser (see: **"VIDEO ENTRY SYSTEM RISER"**)

✱ **20 m MAX.** Local lock-release button.

⁜ Only cut off the resistance of the output used.

Simplebus TOP video entry phone system with 2 main entrances, 1 main porter switchboard, 2 secondary entrances and relative porter switchboards

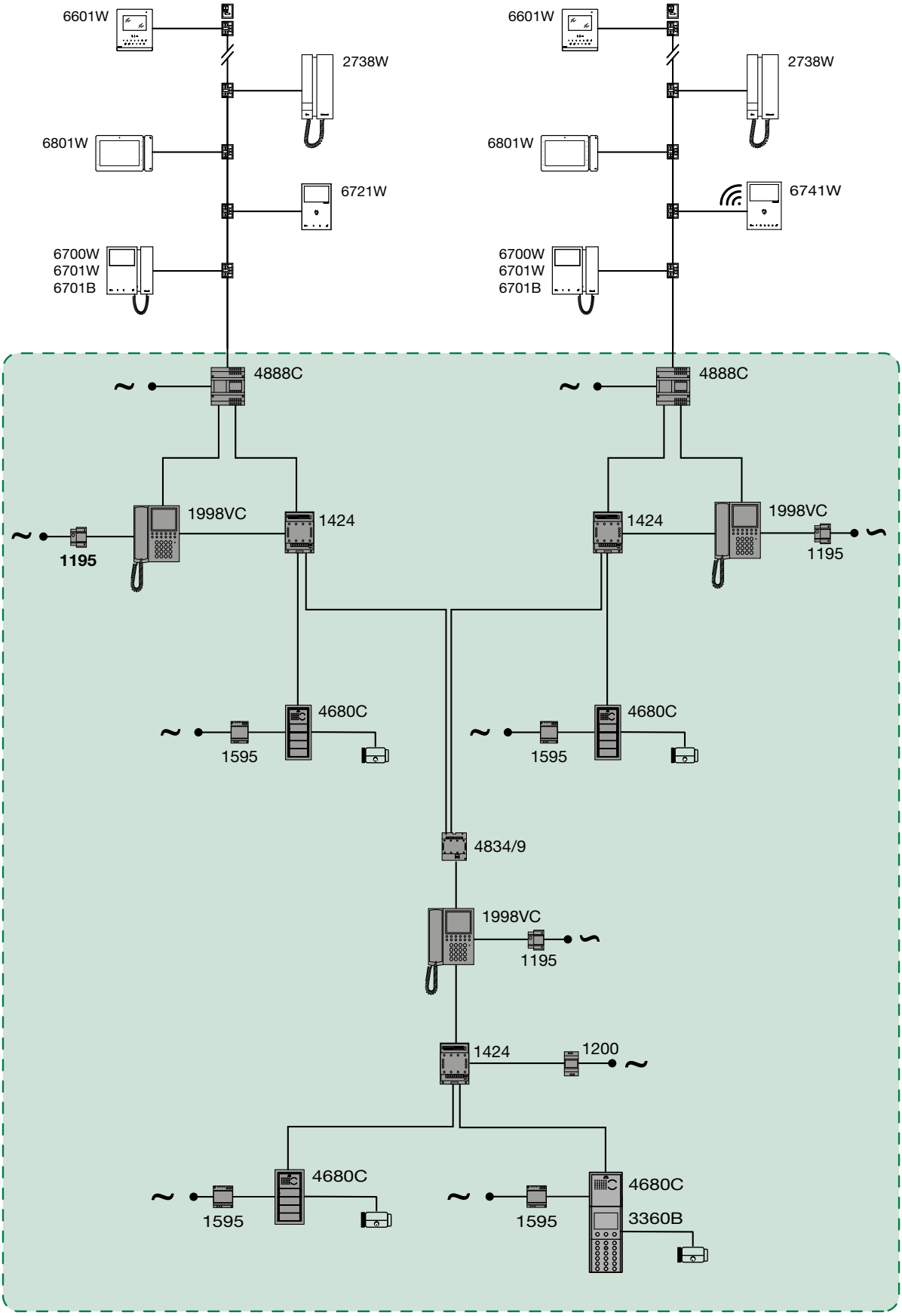

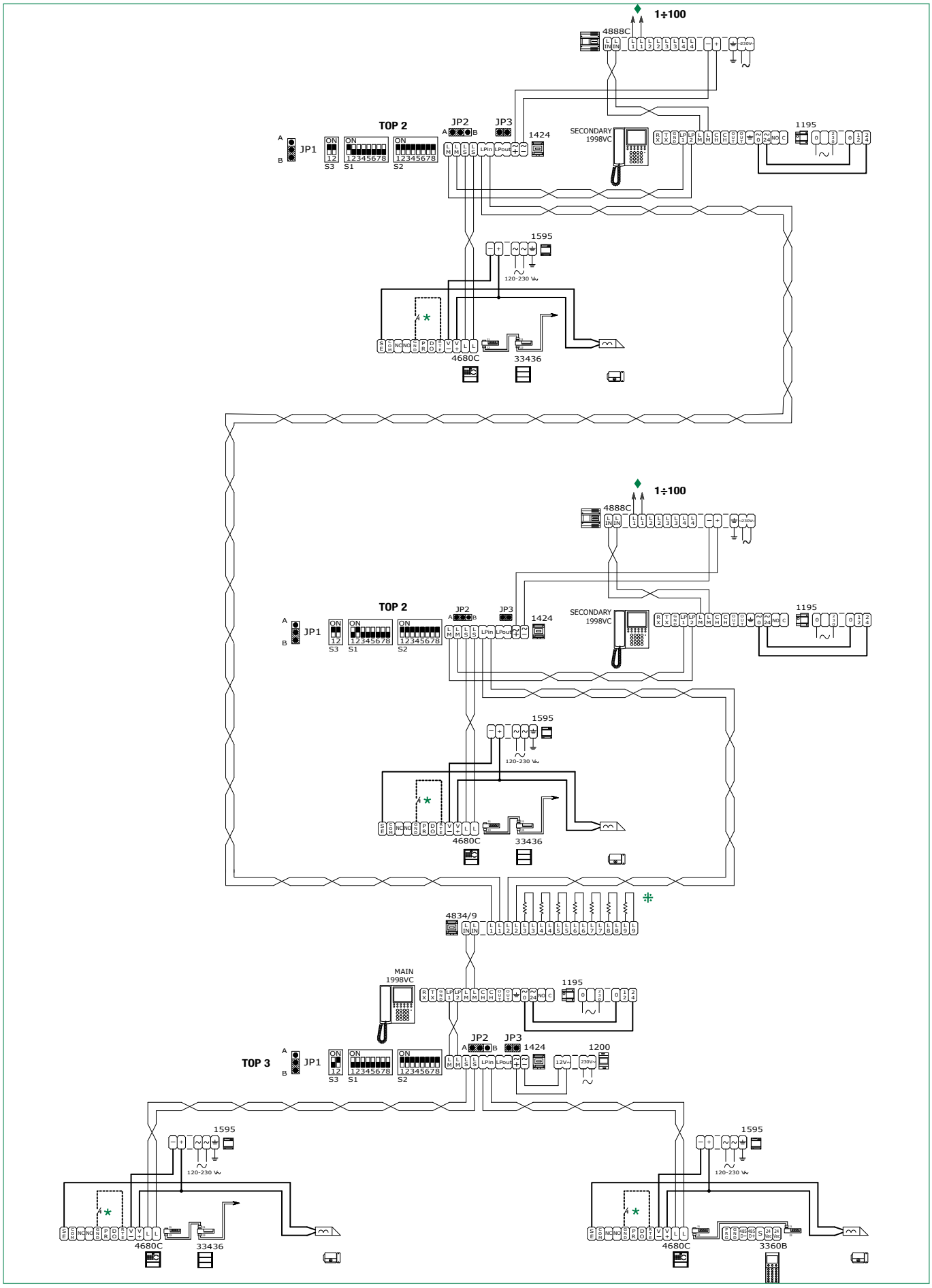

♦ Video door entry system riser (see: **"VIDEO ENTRY SYSTEM RISER"**)

✱ **20 m MAX.** Local lock-release button.

⁜ Only cut off the resistance of the output used.

Simplebus TOP video entry phone system with 1 main entrance, 4 secondary entrances and 2 main porter switchboards in SERIES configuration.

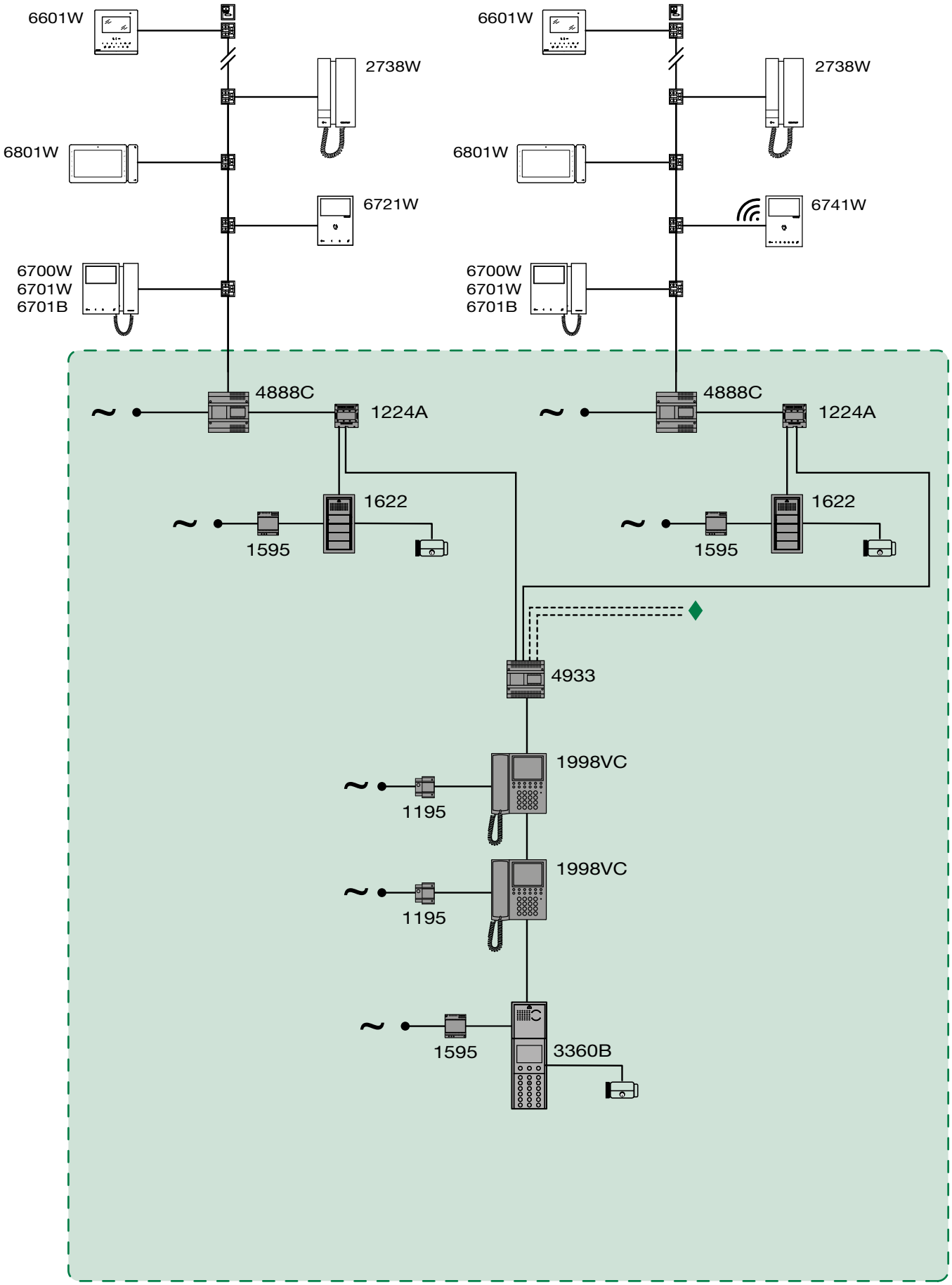

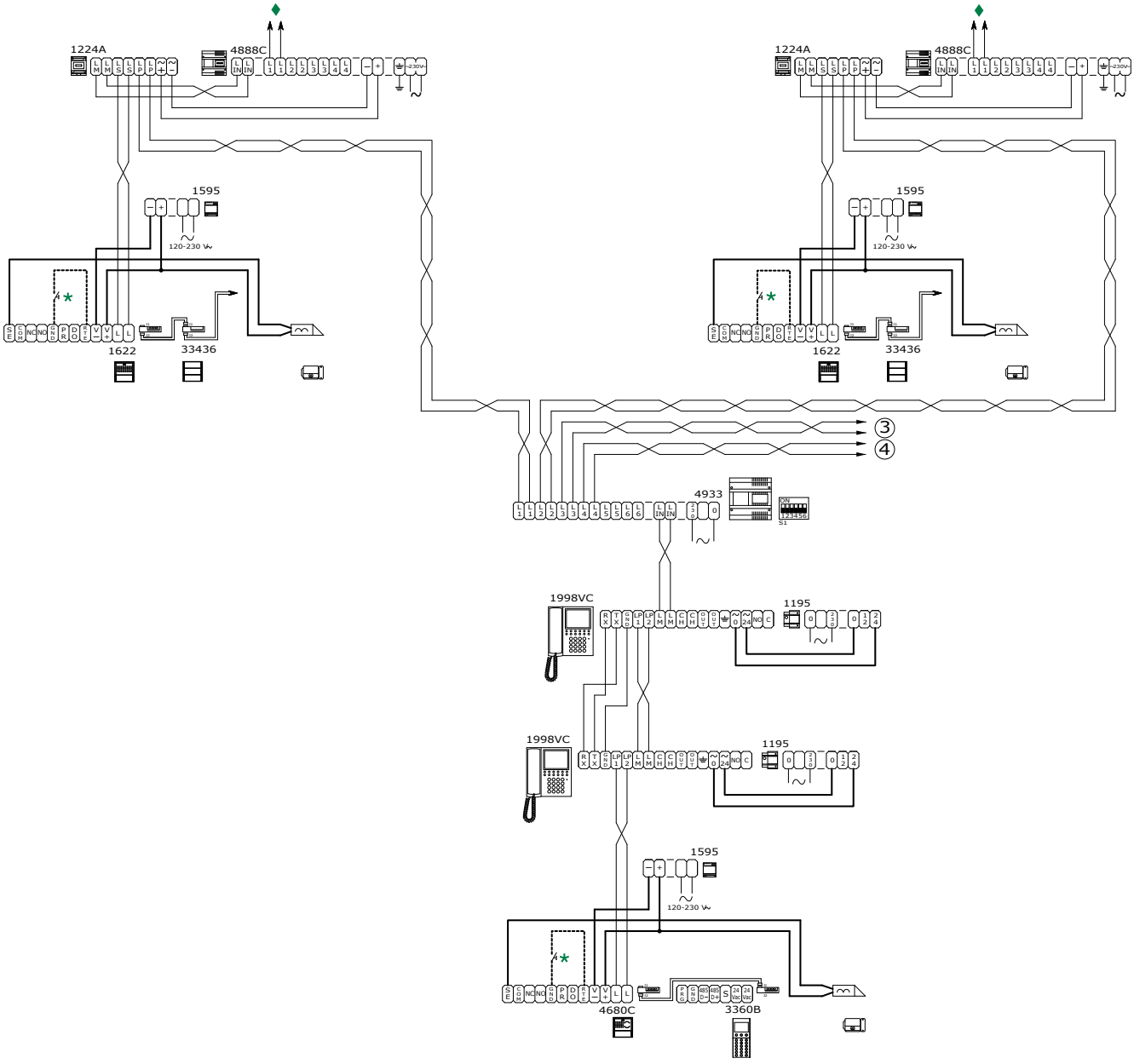

♦ Video door entry system riser (see: **"VIDEO ENTRY SYSTEM RISER"**)

✱ **20 m MAX.** Local lock-release button.

⁜ Only cut off the resistance of the output used.

Simplebus TOP video entry phone system with 1 main entrance, 3 secondary entrances and 2 main porter switchboards in PARALLEL configuration.

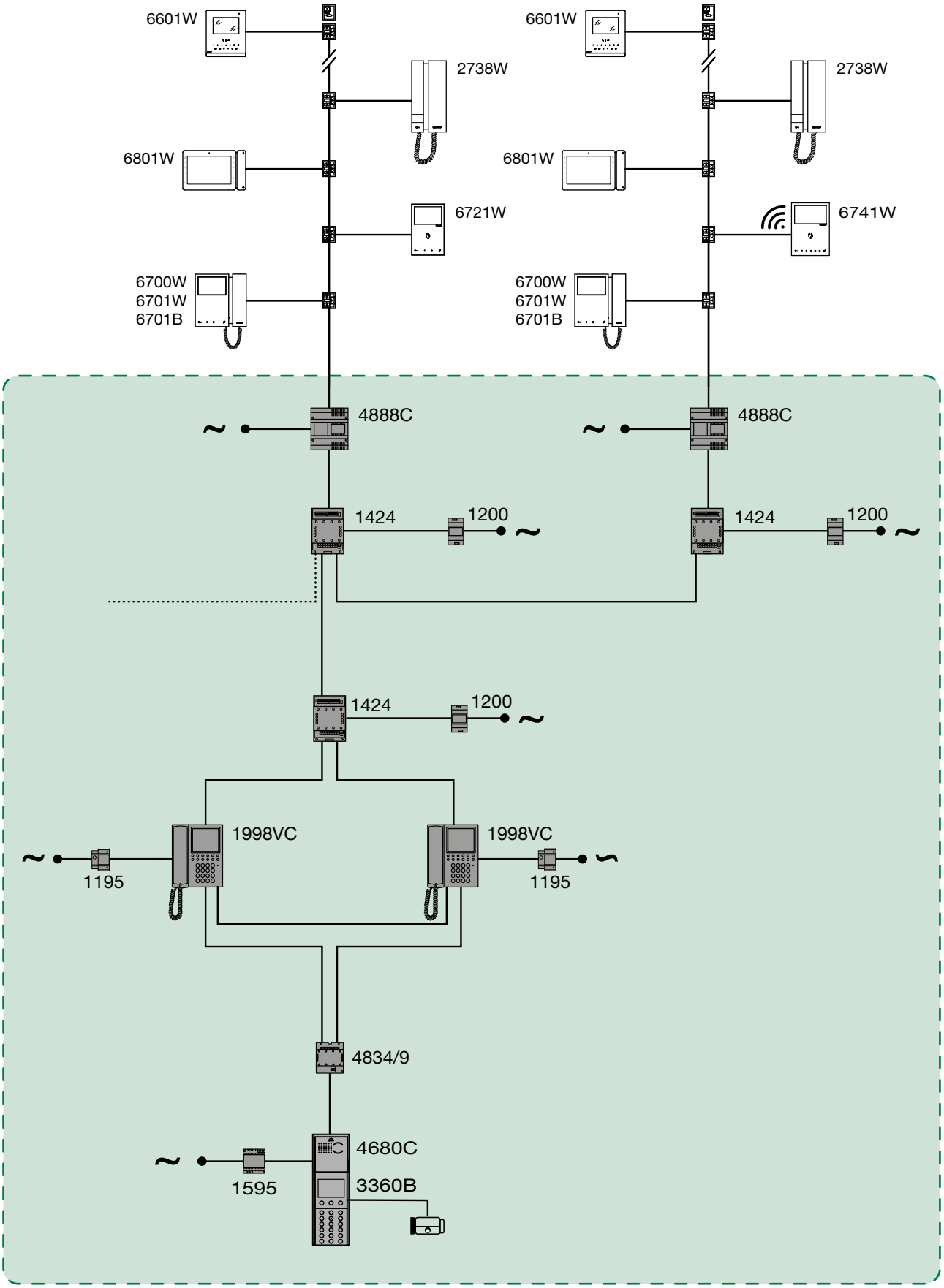

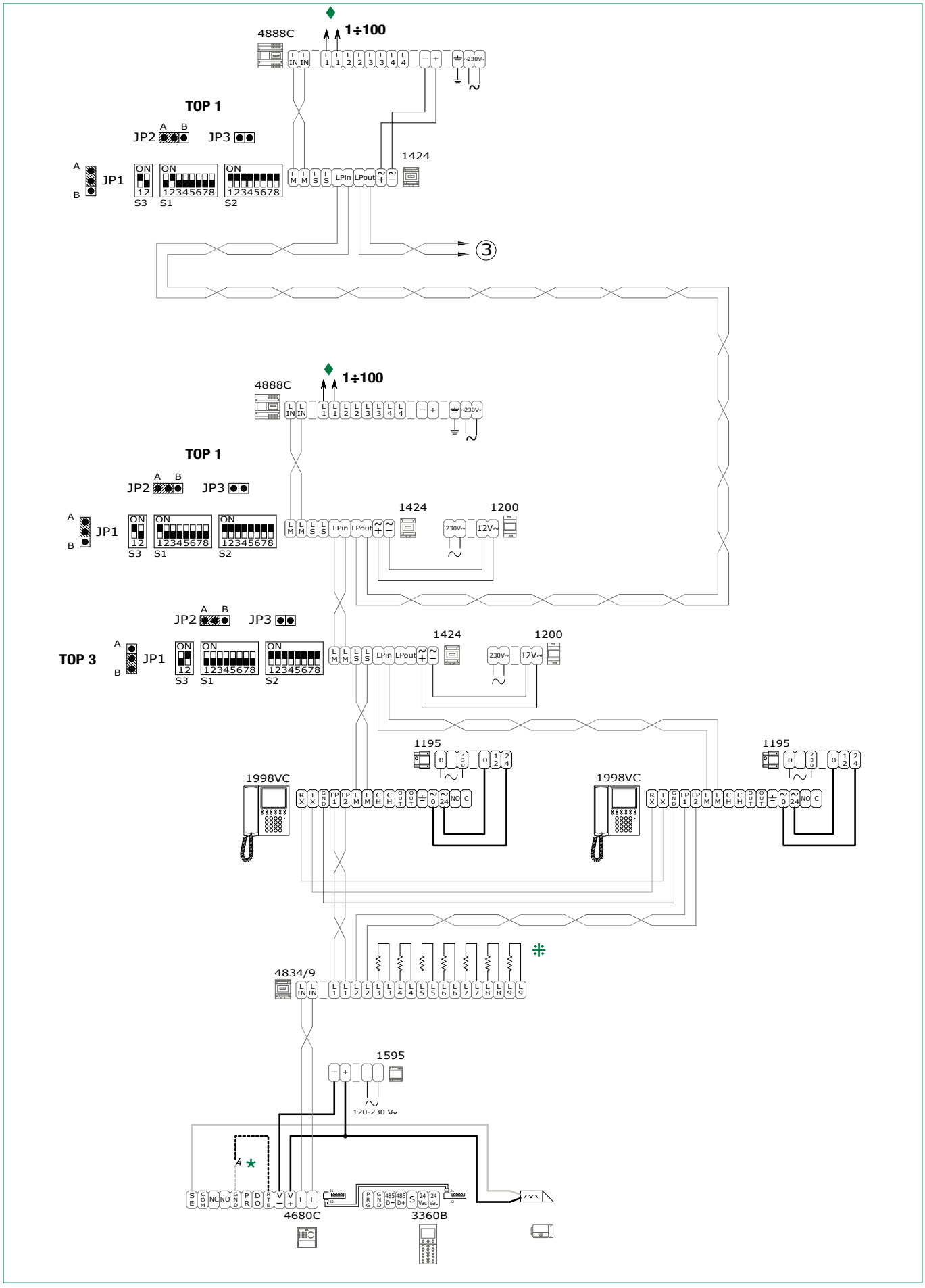

♦ Video door entry system riser (see: **"VIDEO ENTRY SYSTEM RISER"**)

✱ **20 m MAX.** Local lock-release button.

⁜ Only cut off the resistance of the output used.

Switching devices in TOP1 mode, branched KIT 8461/8451 external unit in TOP mode

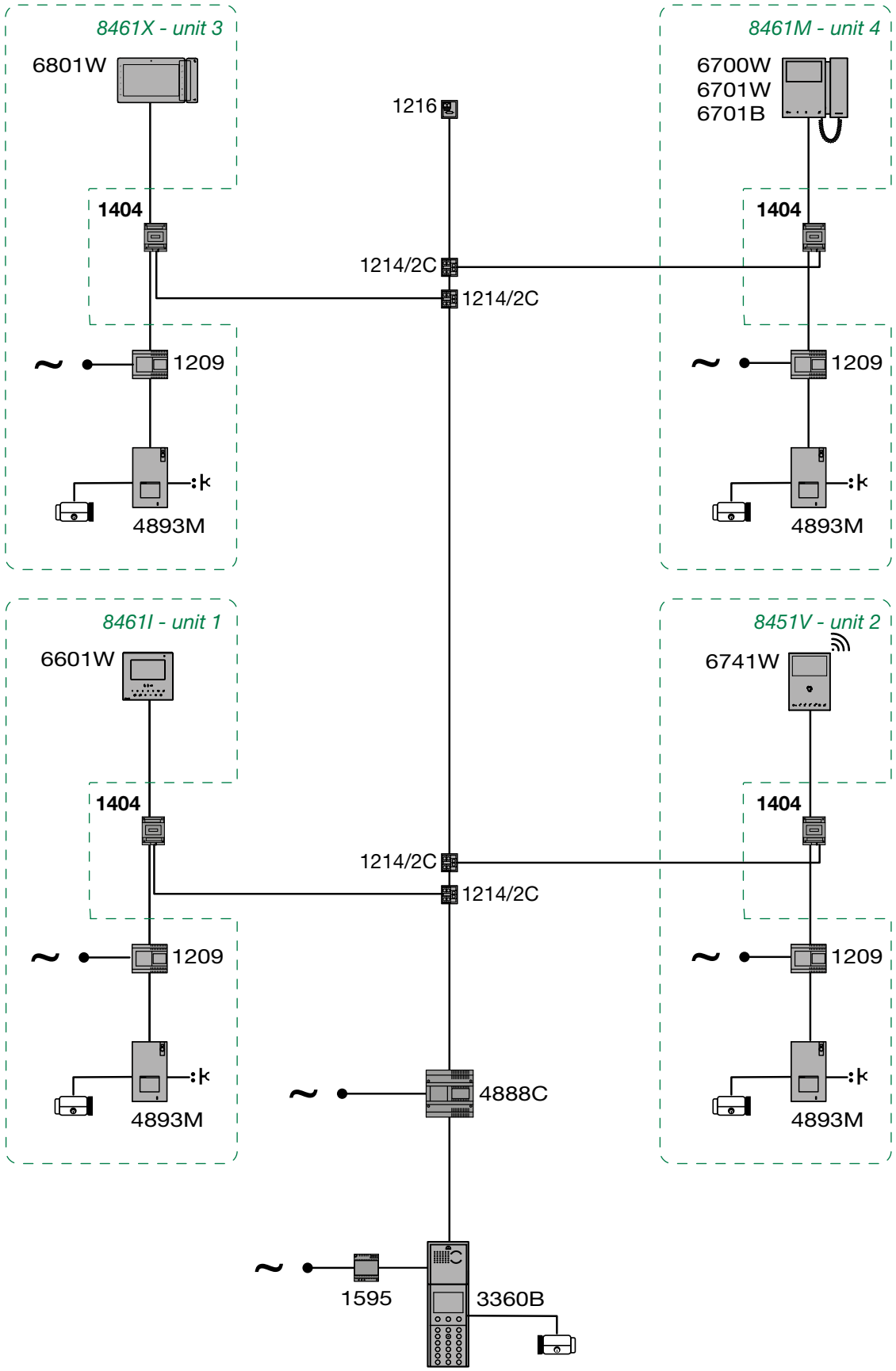

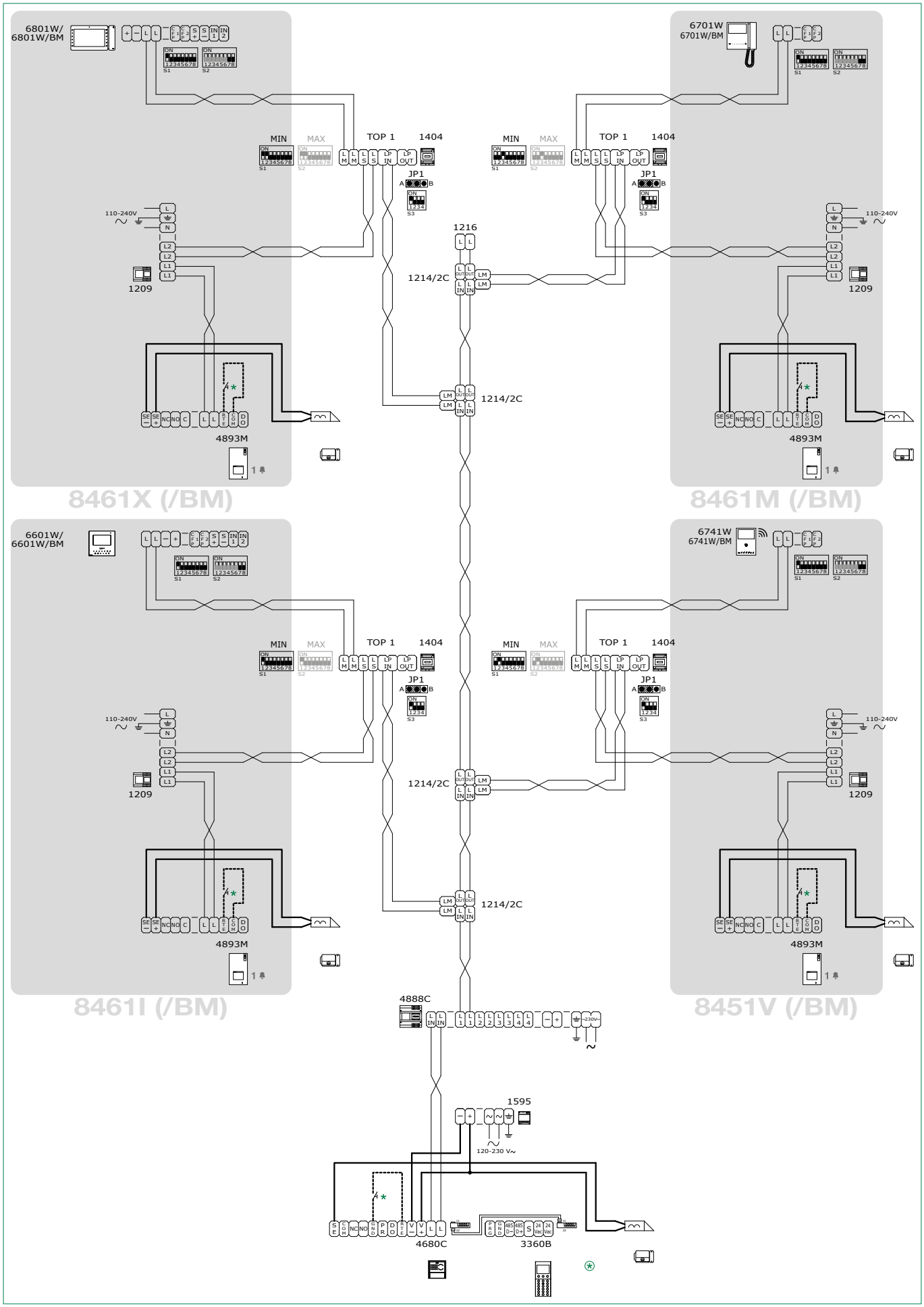

✱ **20 m MAX.** Local lock-release button.

Ⓐ Main port in TOP mode.

Switching devices in STANDARD mode, branched KIT 8461/8451

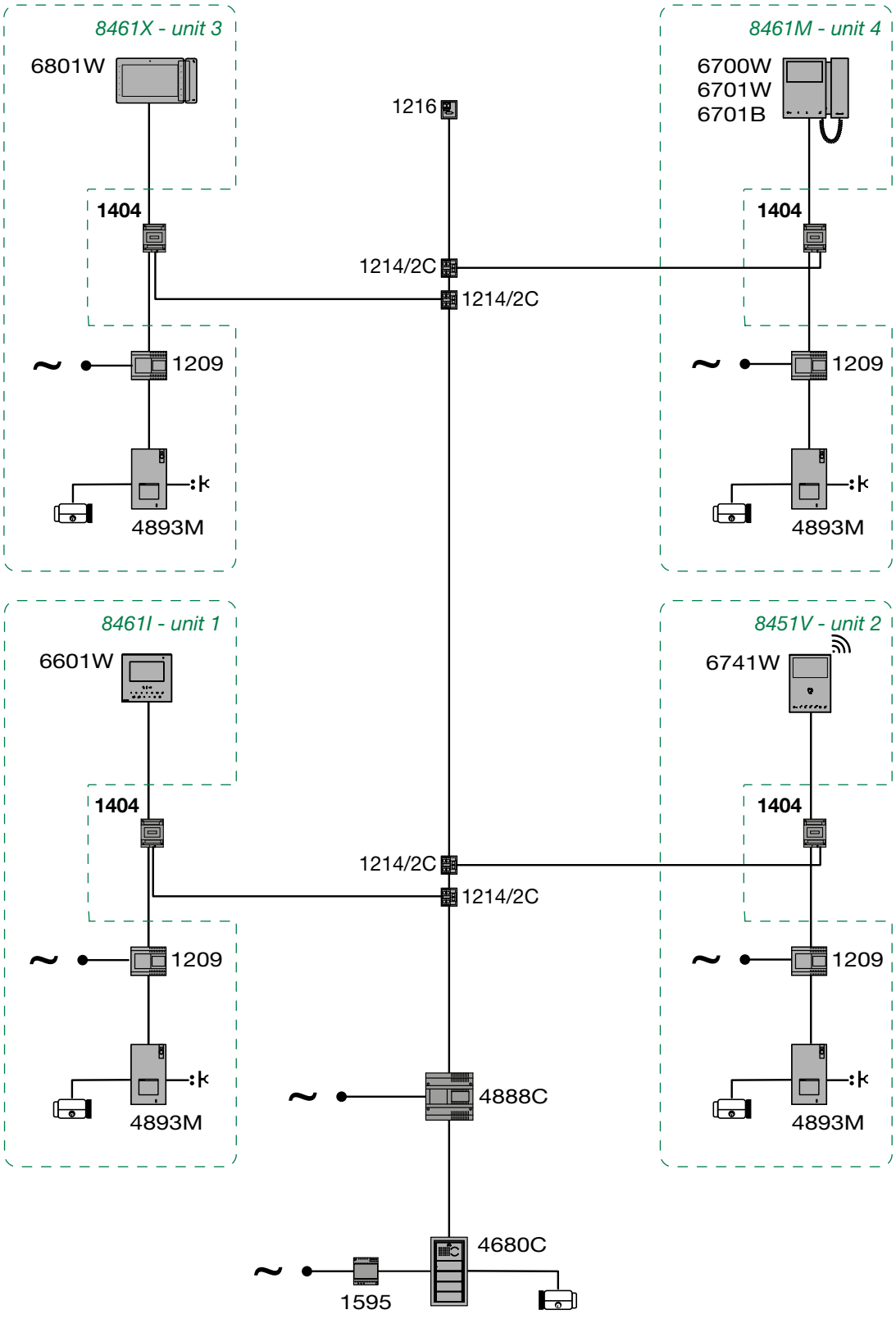

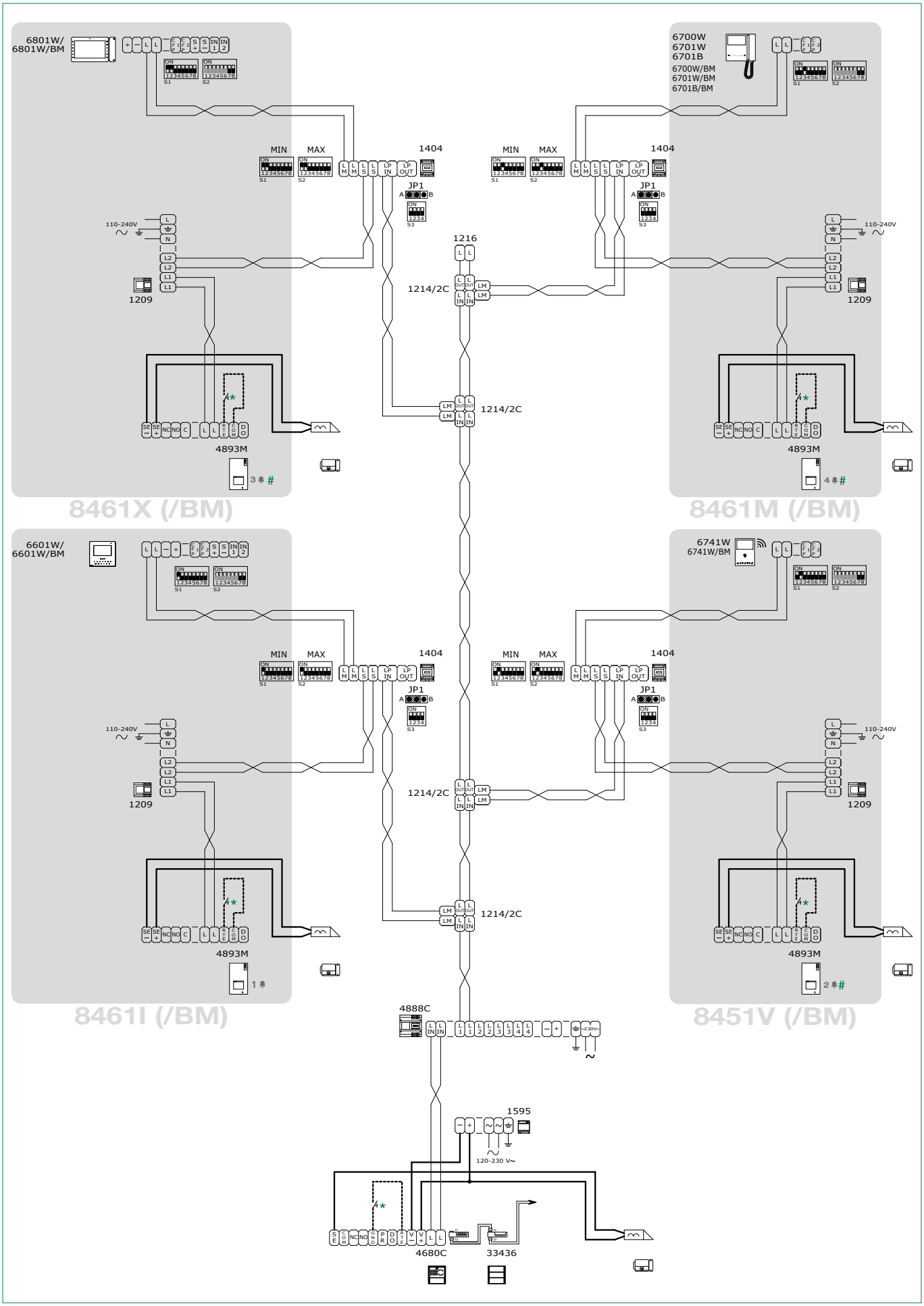

✱ **20 m MAX.** Local lock-release button.

\# For call address programming, please refer to the full manual for Art. 4893M

Switching devices in STANDARD mode, KIT 8461/8451 in cascade connection

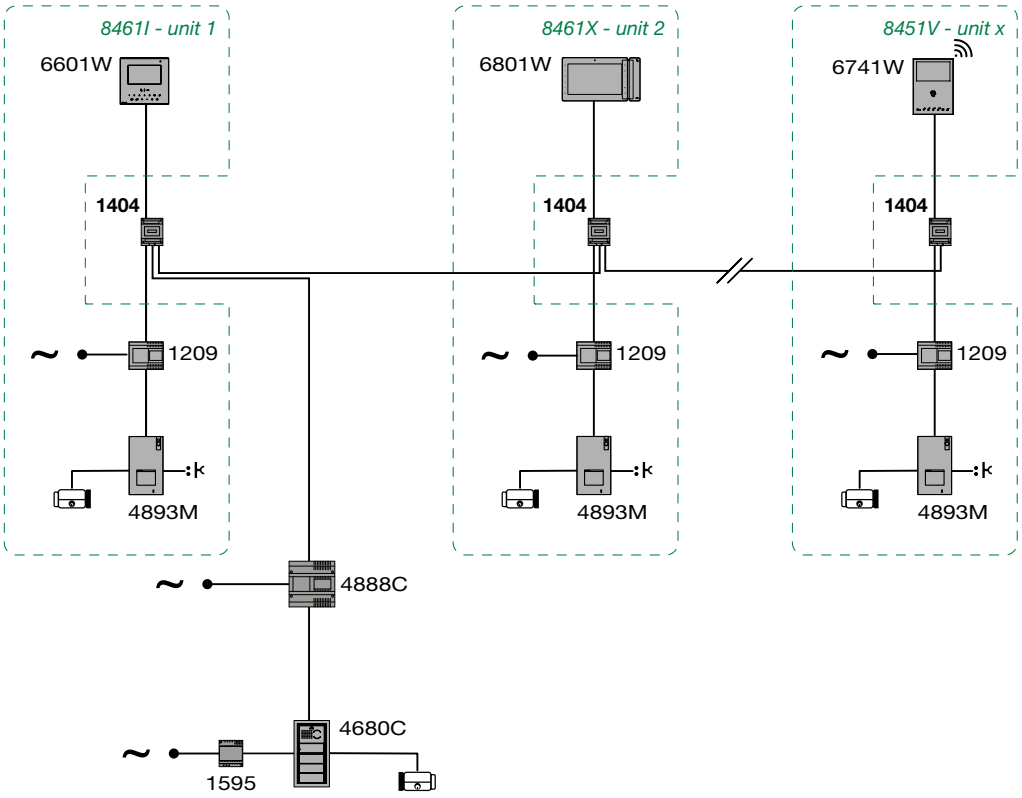

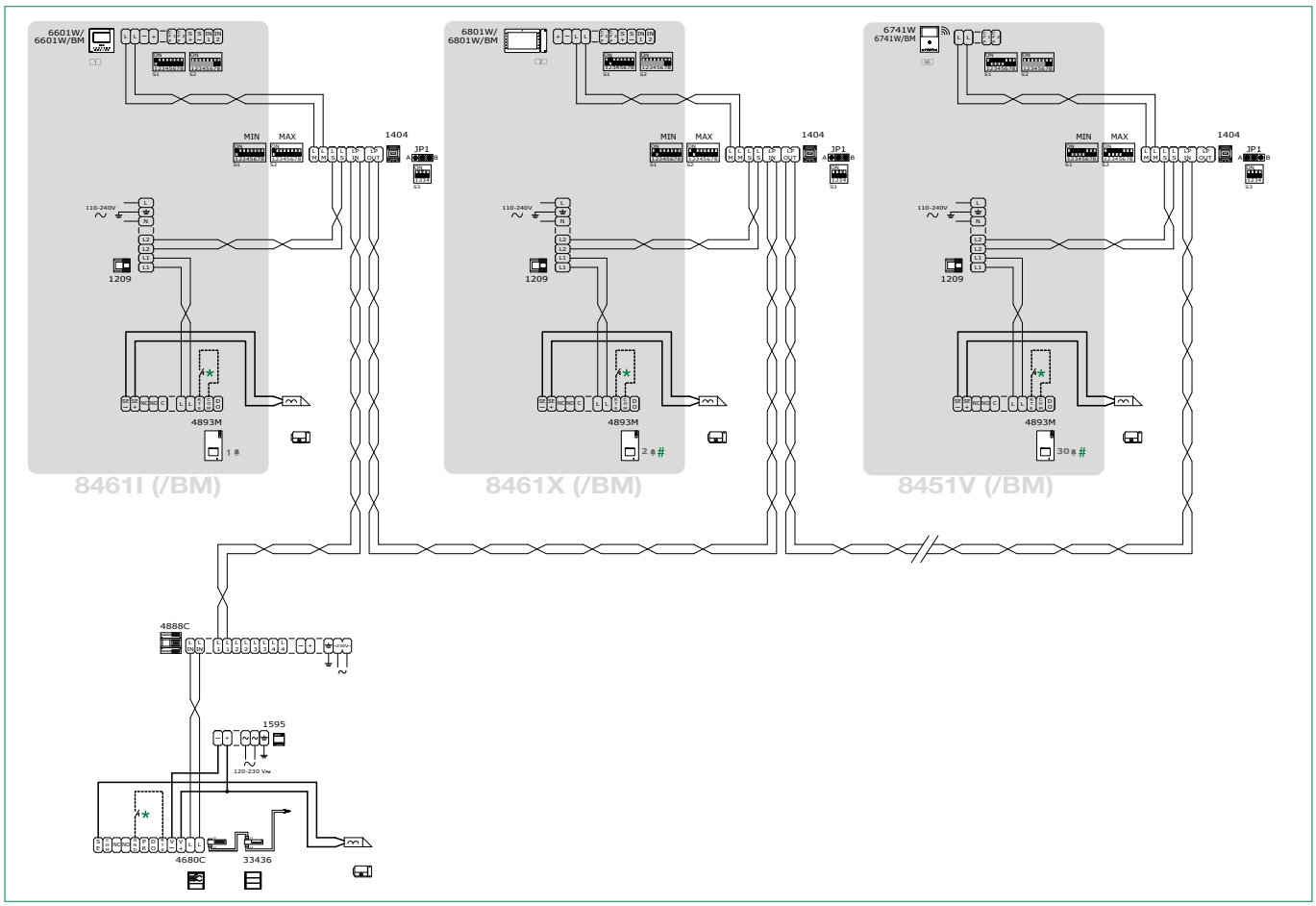

* **20 m MAX.** Local lock-release button.

\# For call address programming, please refer to the full manual for Art. 4893M

Switching devices in TOP1 mode, KIT 8461/8451 in cascade connection, with external unit in TOP mode

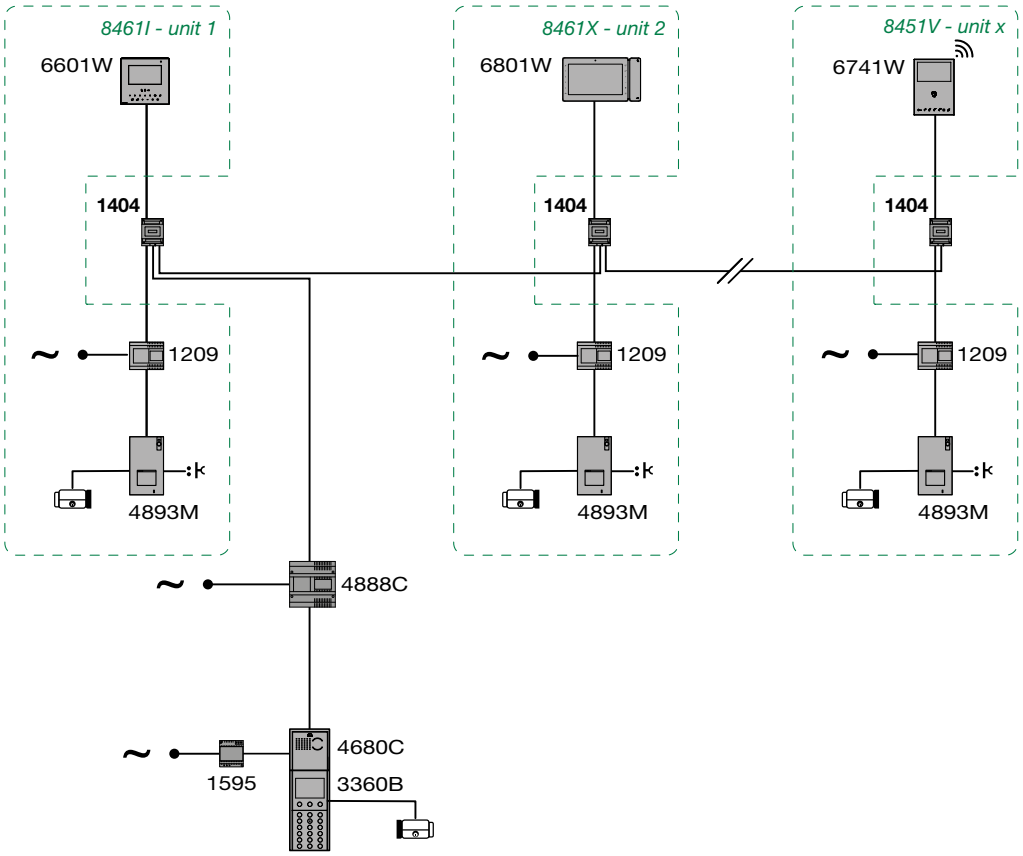

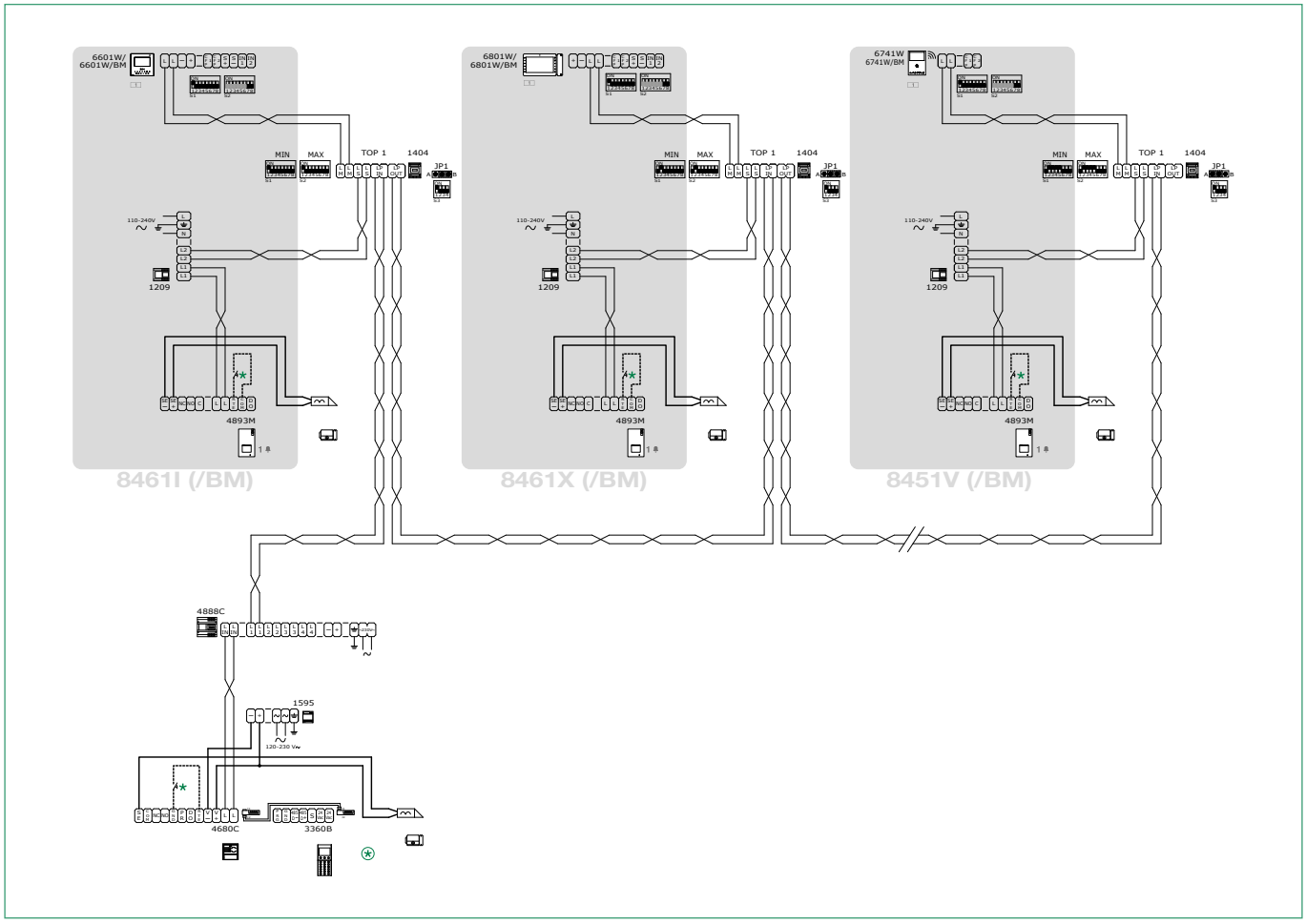

✱ **20 m MAX.** Local lock-release button.

Ⓐ Main port in TOP mode.

Addition of remote camera module Art. 1409

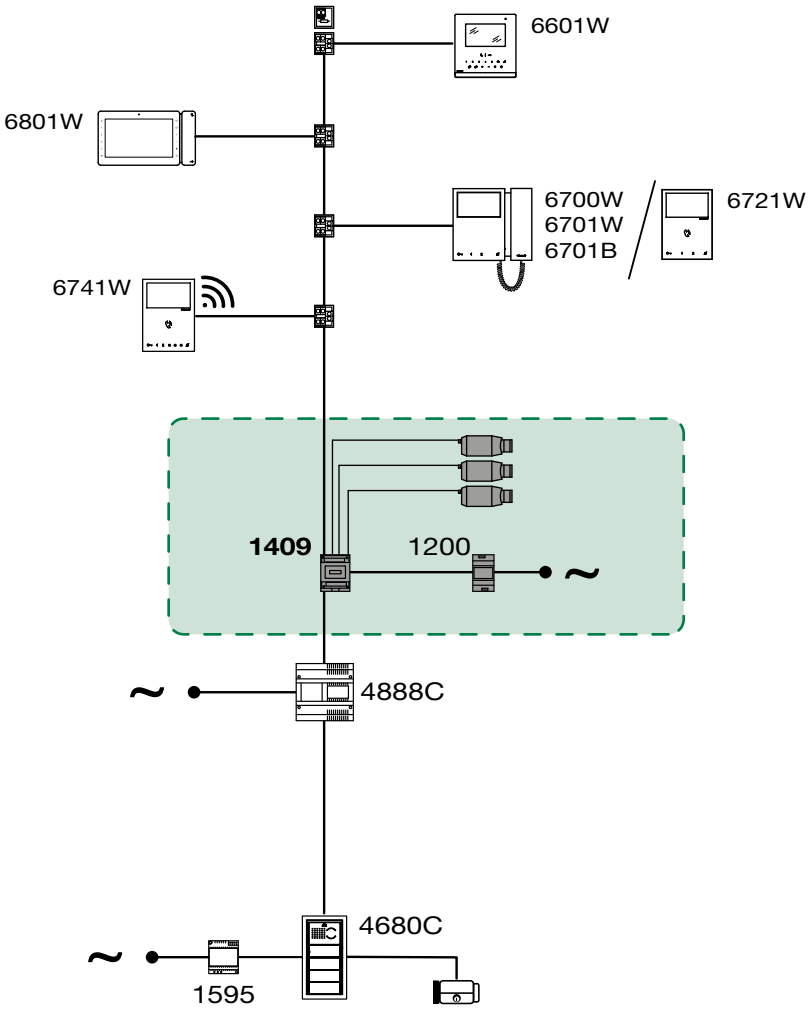

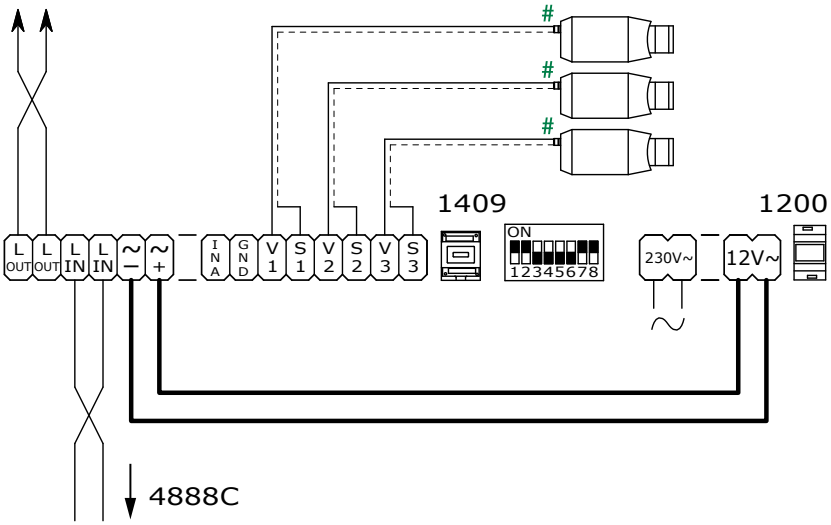

Requires separate power supply.

Addition of remote camera module Art. 1259C

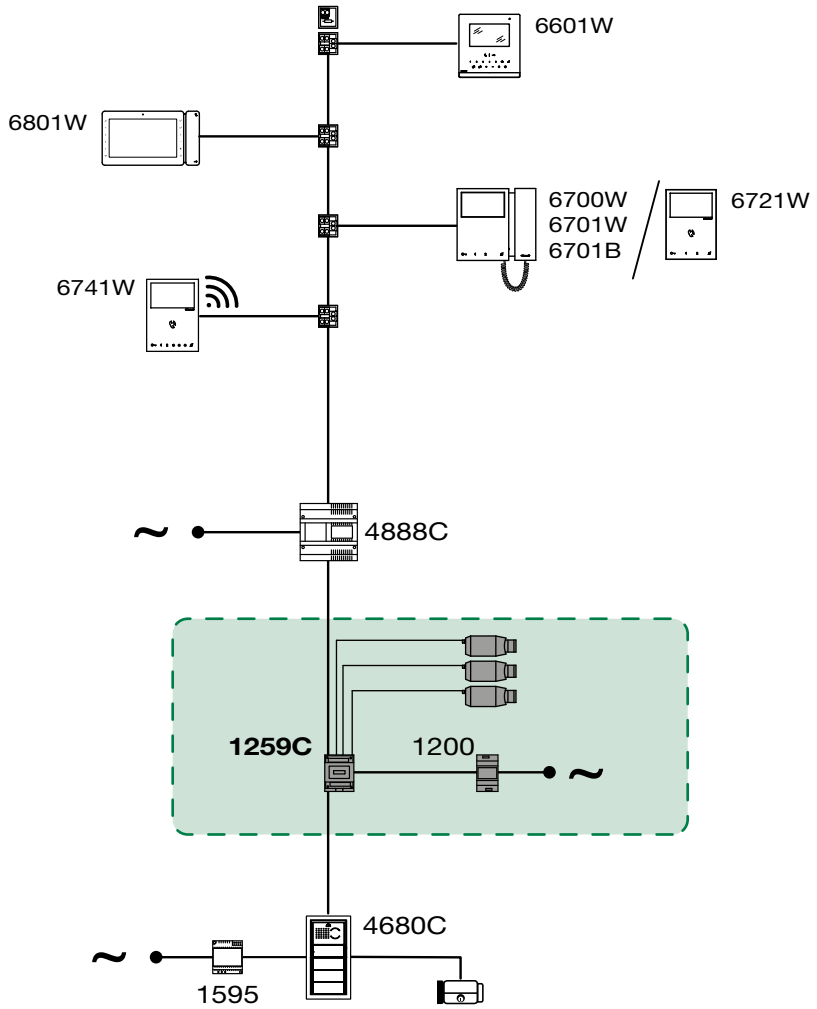

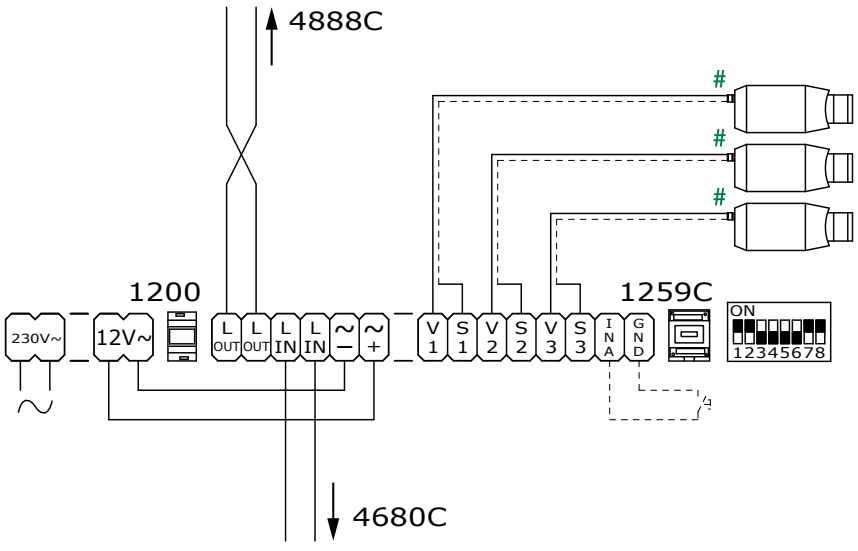

Requires separate power supply.

System with remote camera module Art. 1259C in generic actuator mode and porter switchboard

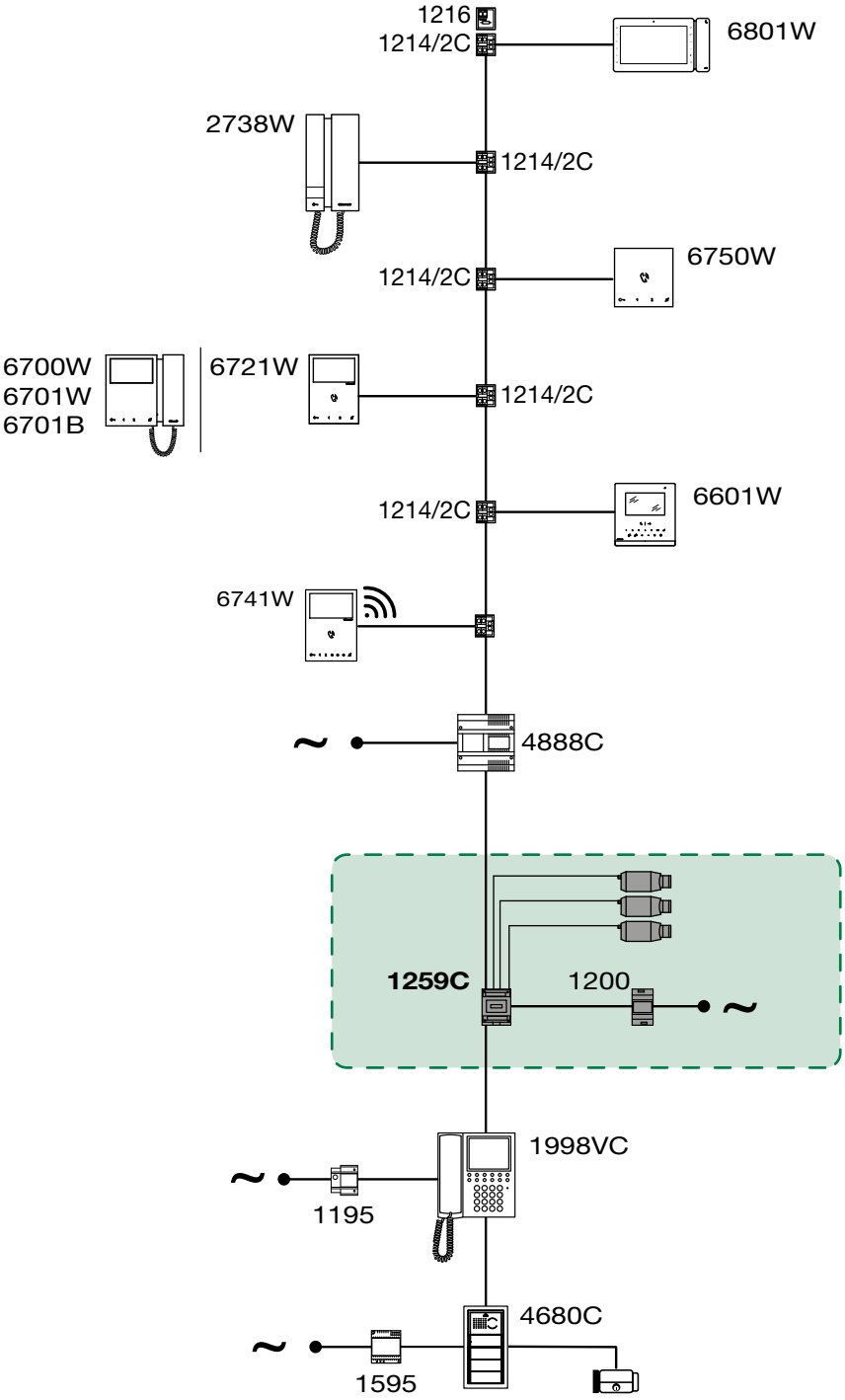

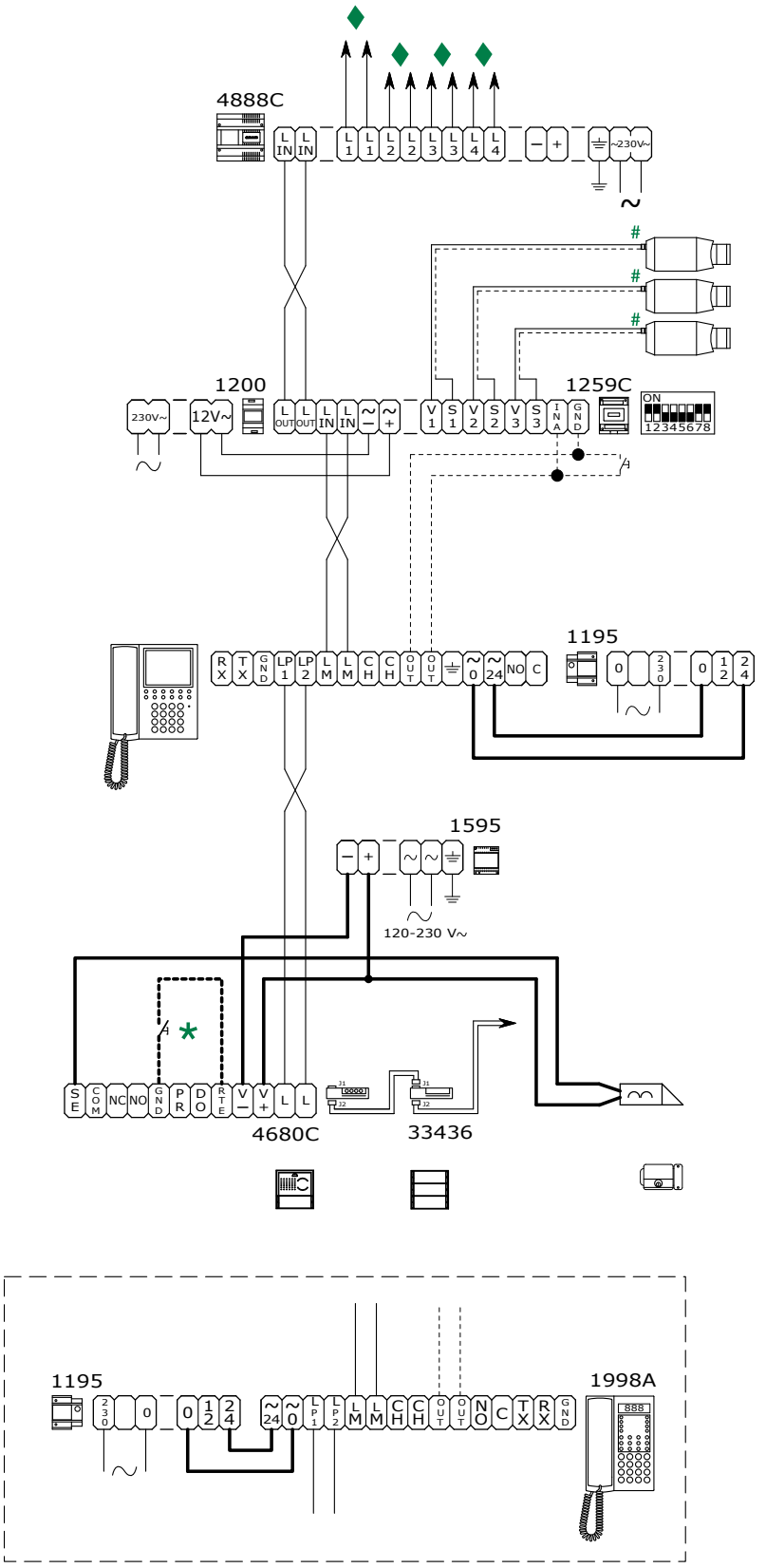

♦ Video door entry system riser (see: **"VIDEO ENTRY SYSTEM RISER"**)

✱ **20 m MAX.** Local lock-release button.

\# Requires separate power supply.

Table of contents

Warning

System performance **123**
- **Operating distances** **123**
- **Maximum system expansion** **124**
- **Maximum expansion per apartment** **124**
  - Example of maximum expansion per apartment 124

Wiring diagrams **125**
- **Single-family Door-entry phone System** **125**
- **Two-family Door-entry phone System** **127**
- **Four-family Door-entry phone System** **128**
- **Single-family Door-entry phone System with Second External Unit** **129**
- **Single-family Door-entry phone System with Three External Units** **130**
- **Door-entry phone system with two Single-family units and Main External Unit** **131**
- **Variant: adding door-entry phones in cascade** **132**
- **Use of actuator relay Art. 1256** **133**
- **Use of remote camera module Art. 1409** **134**
- **Use of additional bell Art. 1229A** **135**

System performance

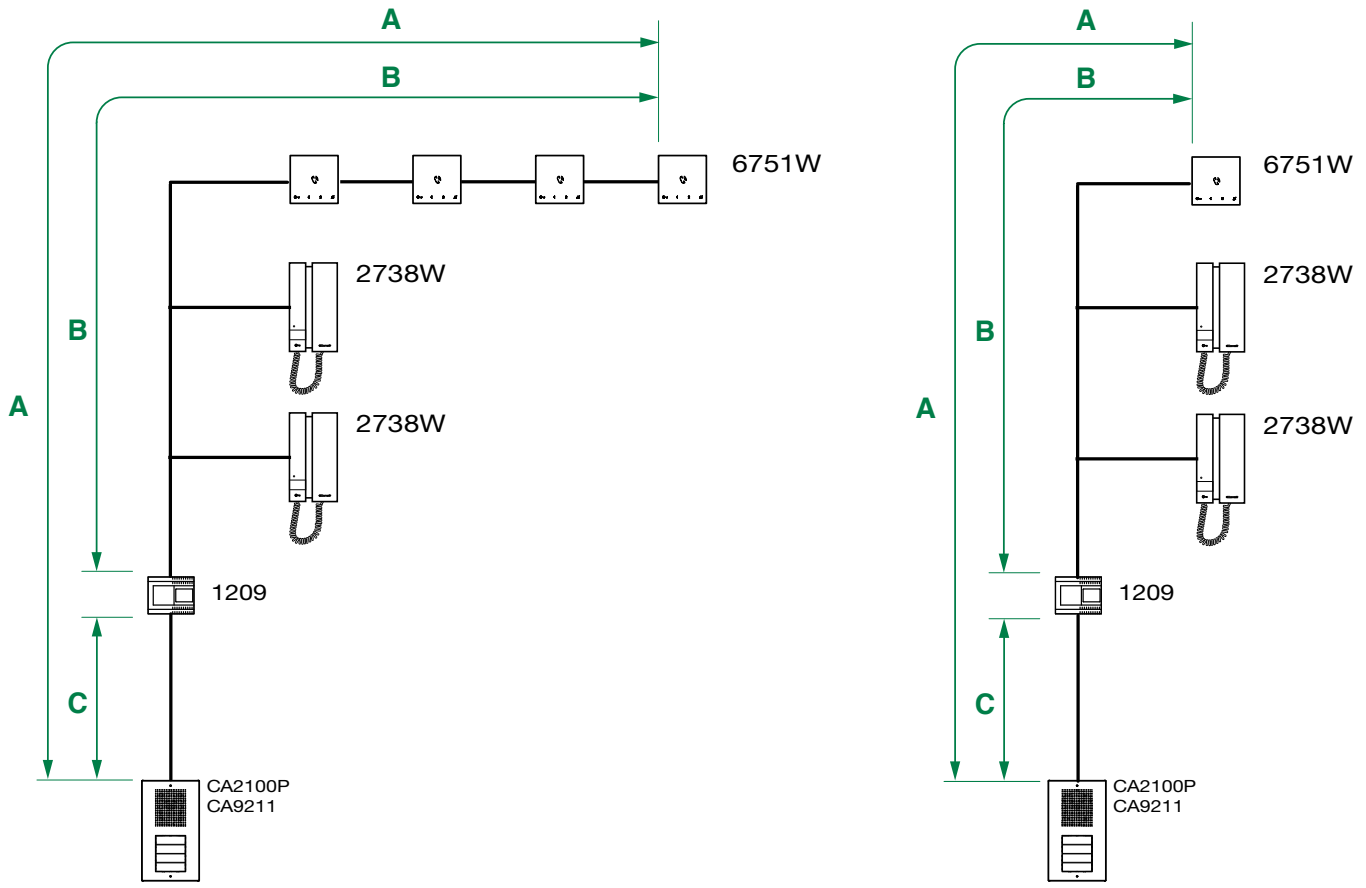

Operating distances

	A MAX	B MAX	C MAX
Comelit Art. 4577/4579 1 mm² (Ø 1,2 mm AWG 17)	**260 m** (850 feet)	**130 m** (425 feet)	**130 m** (425 feet)
UTP5 cat. 5 0,2 mm² (Ø 0,5 mm AWG 24)	**80 m** (260 feet)	**40 m** (130 feet)	**40 m** (130 feet)
0,28 mm² (Ø 0,6 mm AWG 23)	**100 m** (328 feet)	**50 m** (164 feet)	**50 m** (164 feet)
0,5 mm² (Ø 0,8 mm AWG 20)	**140 m** (460 feet)	**70 m** (230 feet)	**70 m** (230 feet)
1 mm² (Ø 1,2 mm AWG 17)	**200 m** (656 feet)	**100 m** (328 feet)	**100 m** (328 feet)
1,5 mm² (Ø 1,4 mm AWG 15)	**80 m** (260 feet)	**40 m** (130 feet)	**40 m** (130 feet)
UTP5 cat. 5 0,2 mm² (Ø 0,5 mm AWG 24) MULTI PAIR CABLE ⁜ 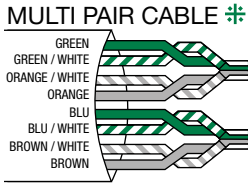	**260 m** (850 feet)	**130 m** (425 feet)	**130 m** (425 feet)

⁜ UTP cable with multi-cable connection: FOLLOW THE COLOURS SHOWN IN THE DIAGRAM!

Maximum system expansion

Devices	6751W	2738W
Maximum number of internal units that can be powered from art. 1209	20	20
Call repetition devices that can be used	1229A	1229A

Maximum expansion per apartment

Devices	6751W	2738W
Maximum number of internal units (including call repetition devices) with the same user code	4	4

Example of maximum expansion per apartment

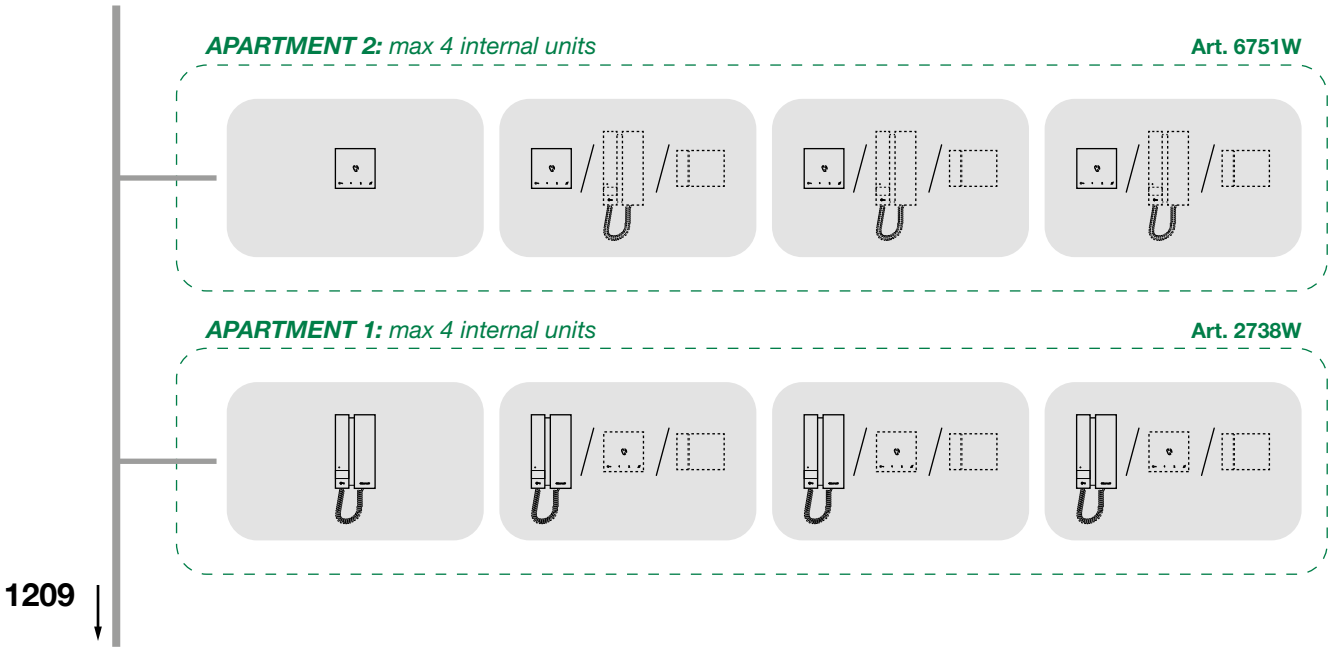

Wiring diagrams

Single-family Door-entry phone System

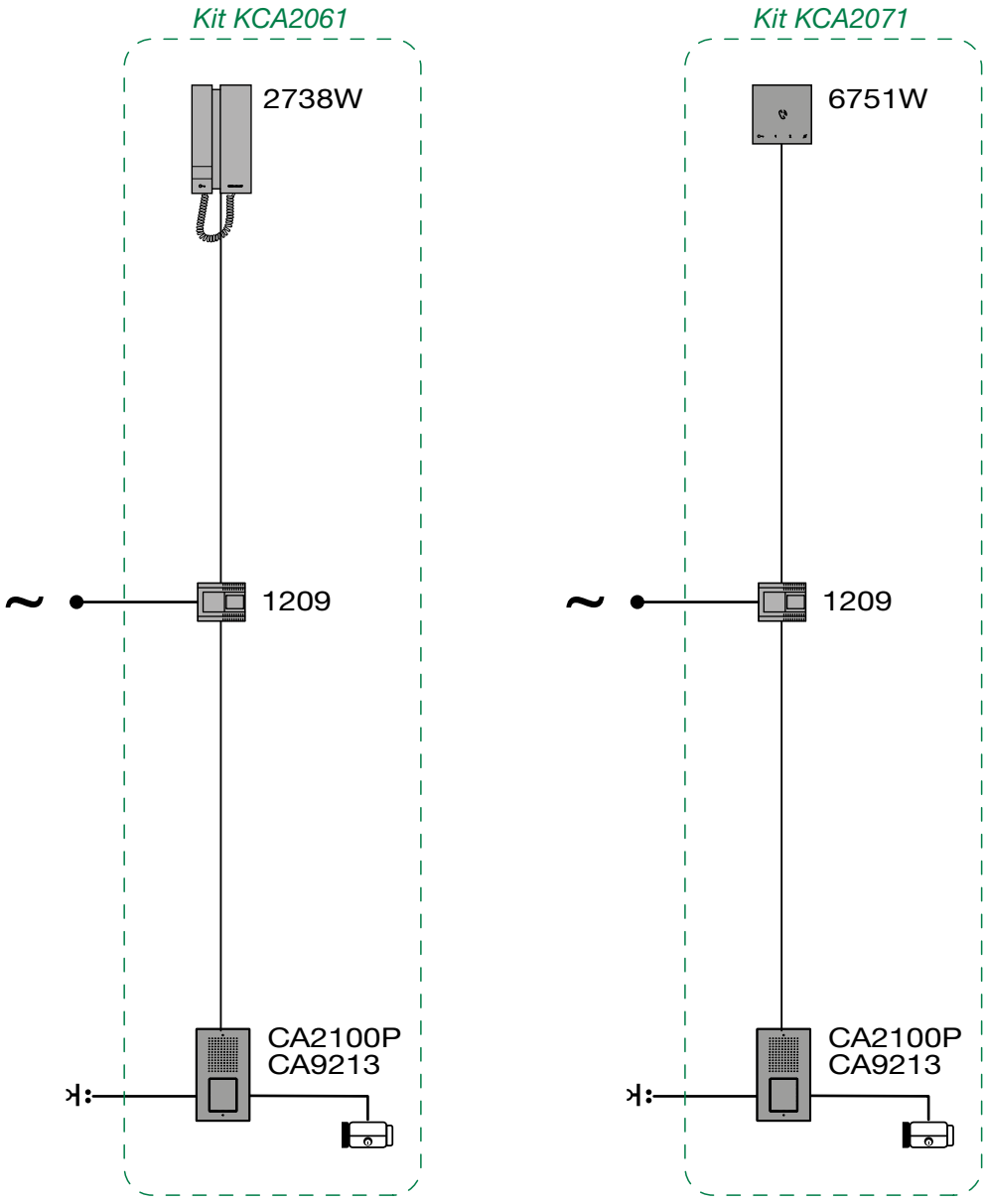

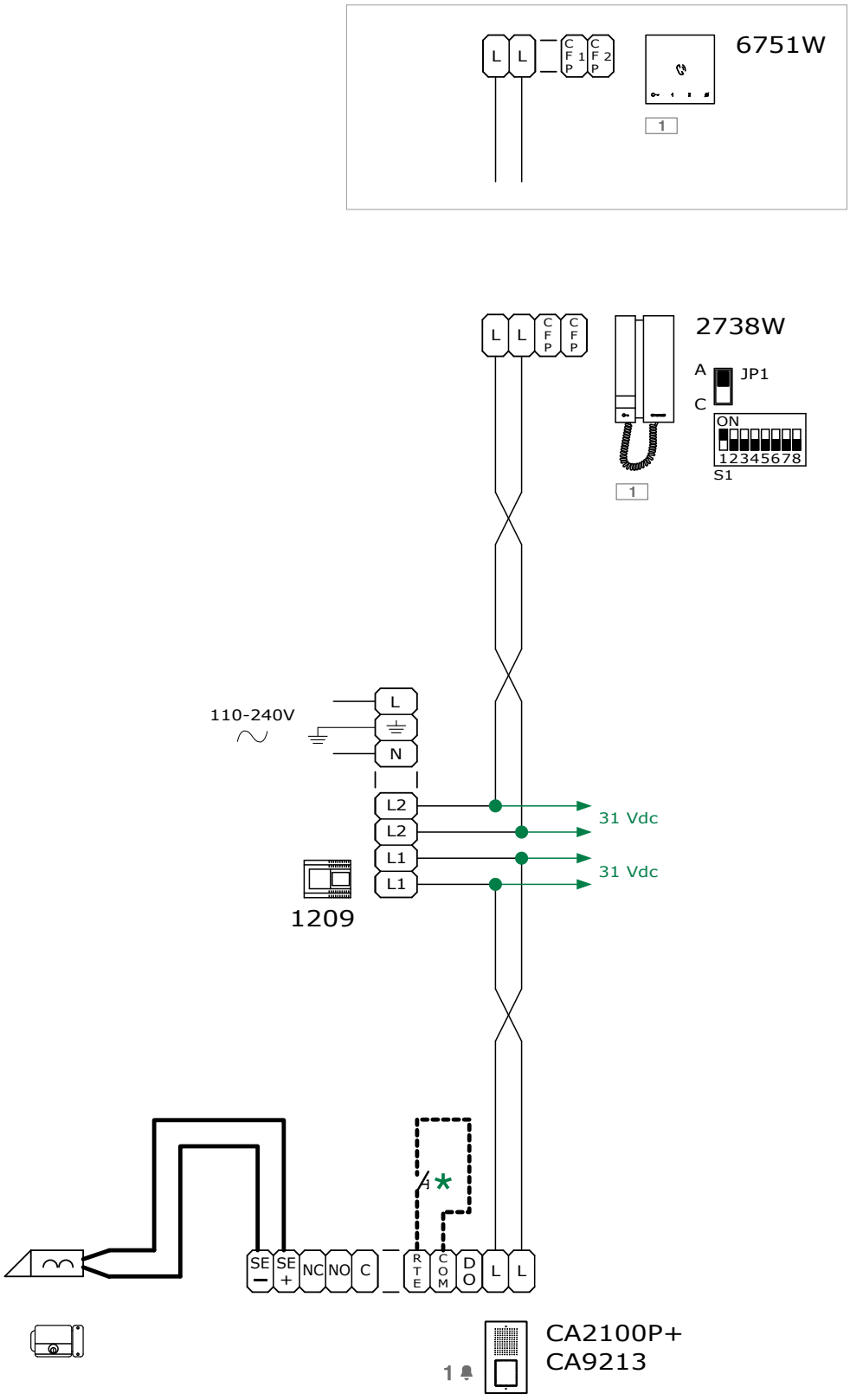

* **Max 20m.** Local lock-release button.

Two-family Door-entry phone System

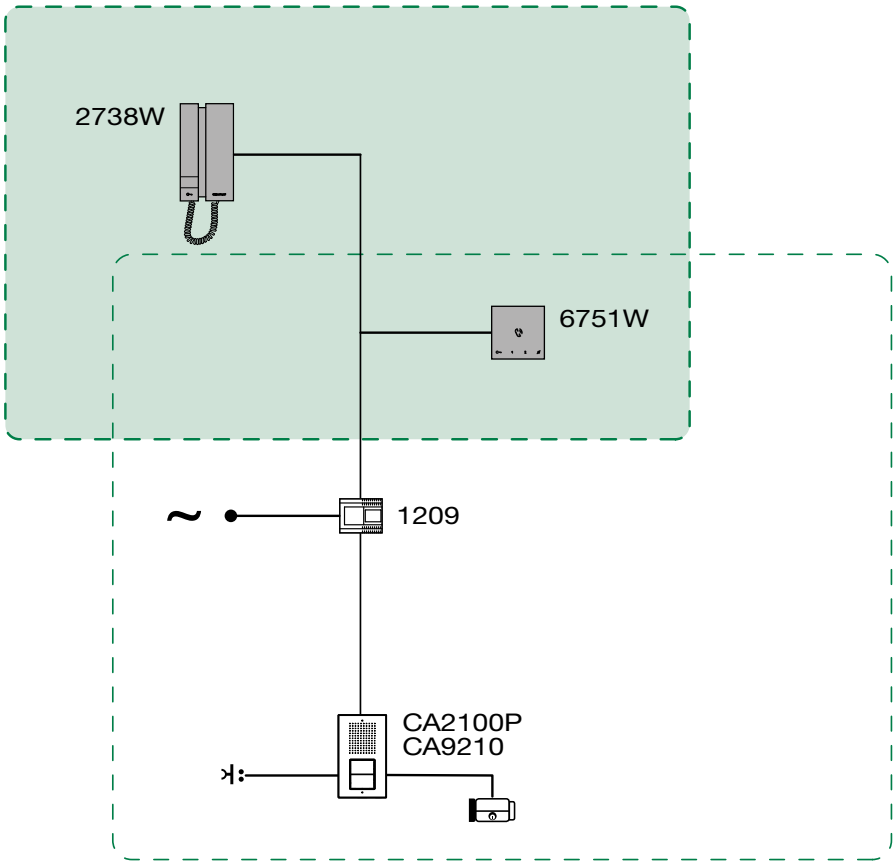

Kit KCA2071

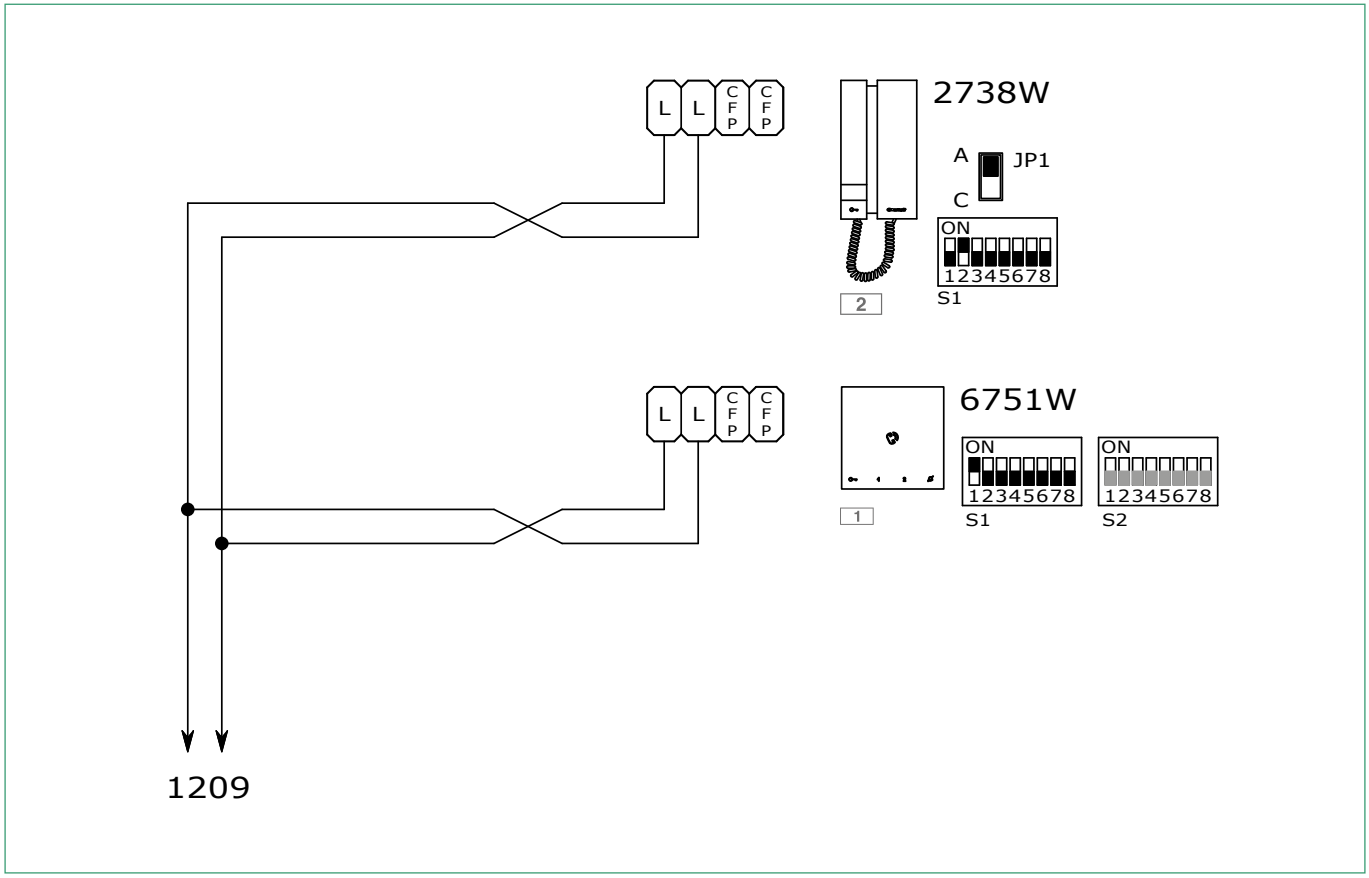

Four-family Door-entry phone System

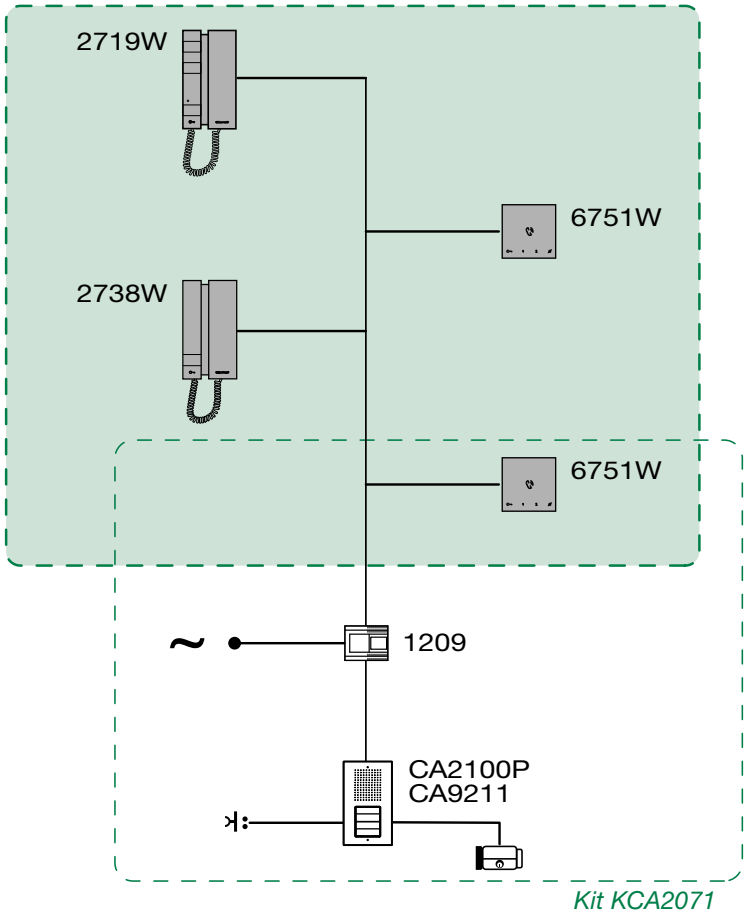

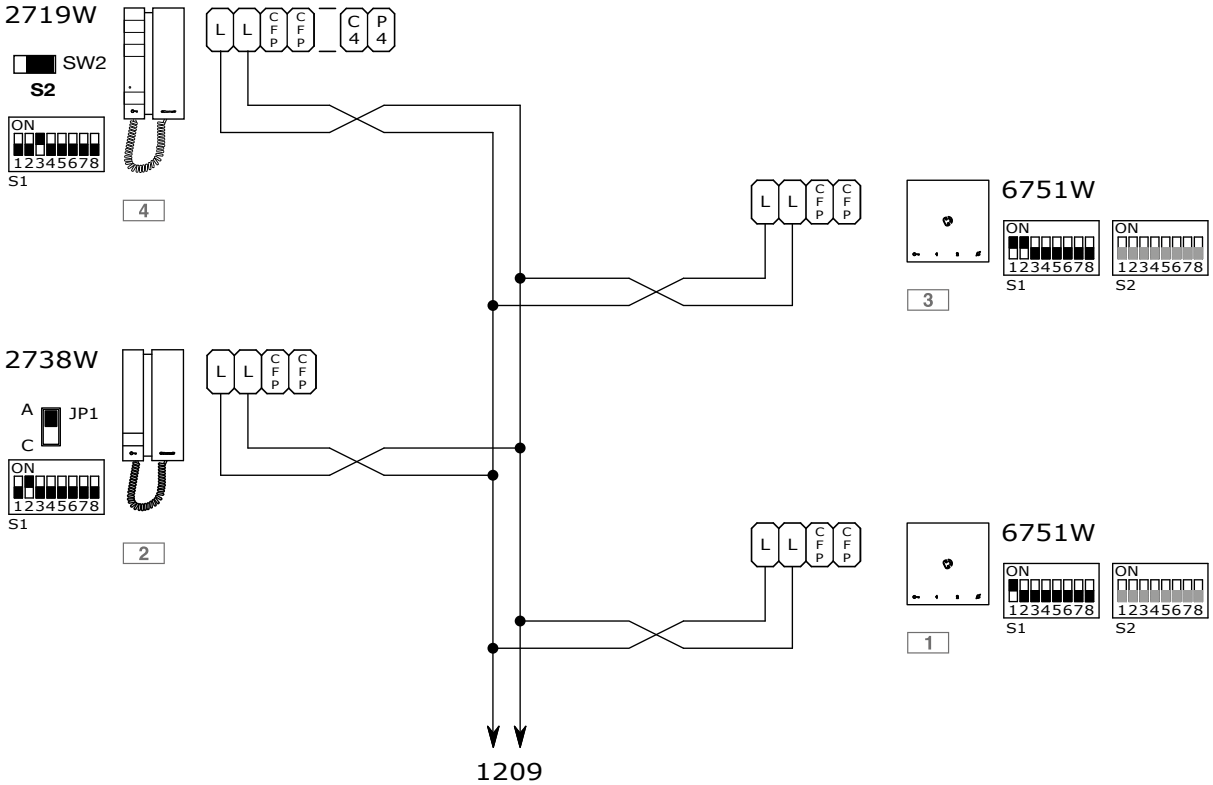

Single-family Door-entry phone System with Second External Unit

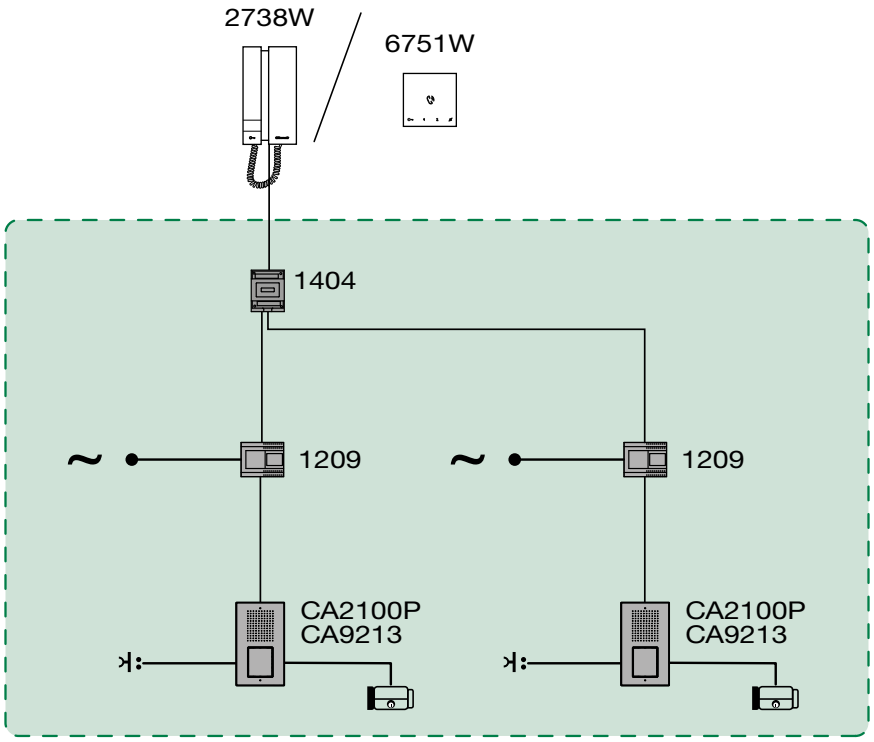

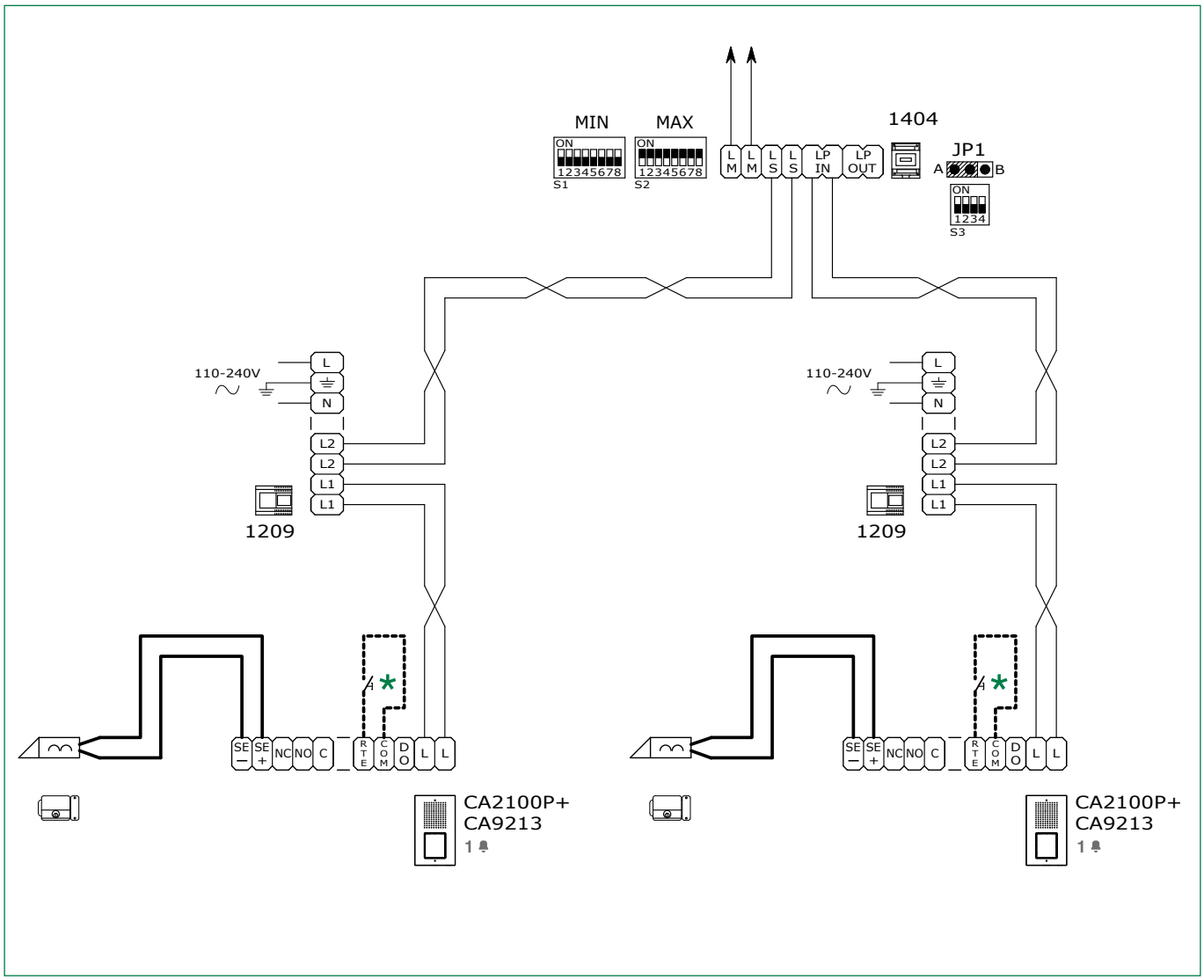

* **Max 20m.** Local lock-release button.

Single-family Door-entry phone System with Three External Units

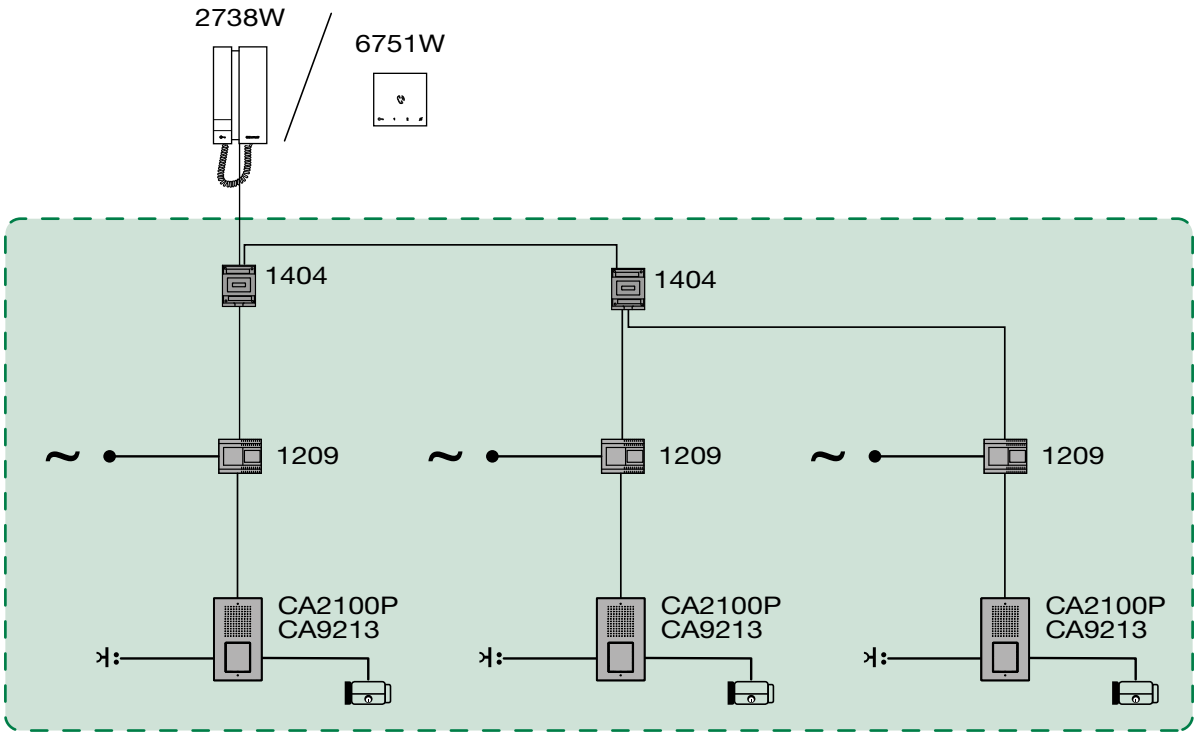

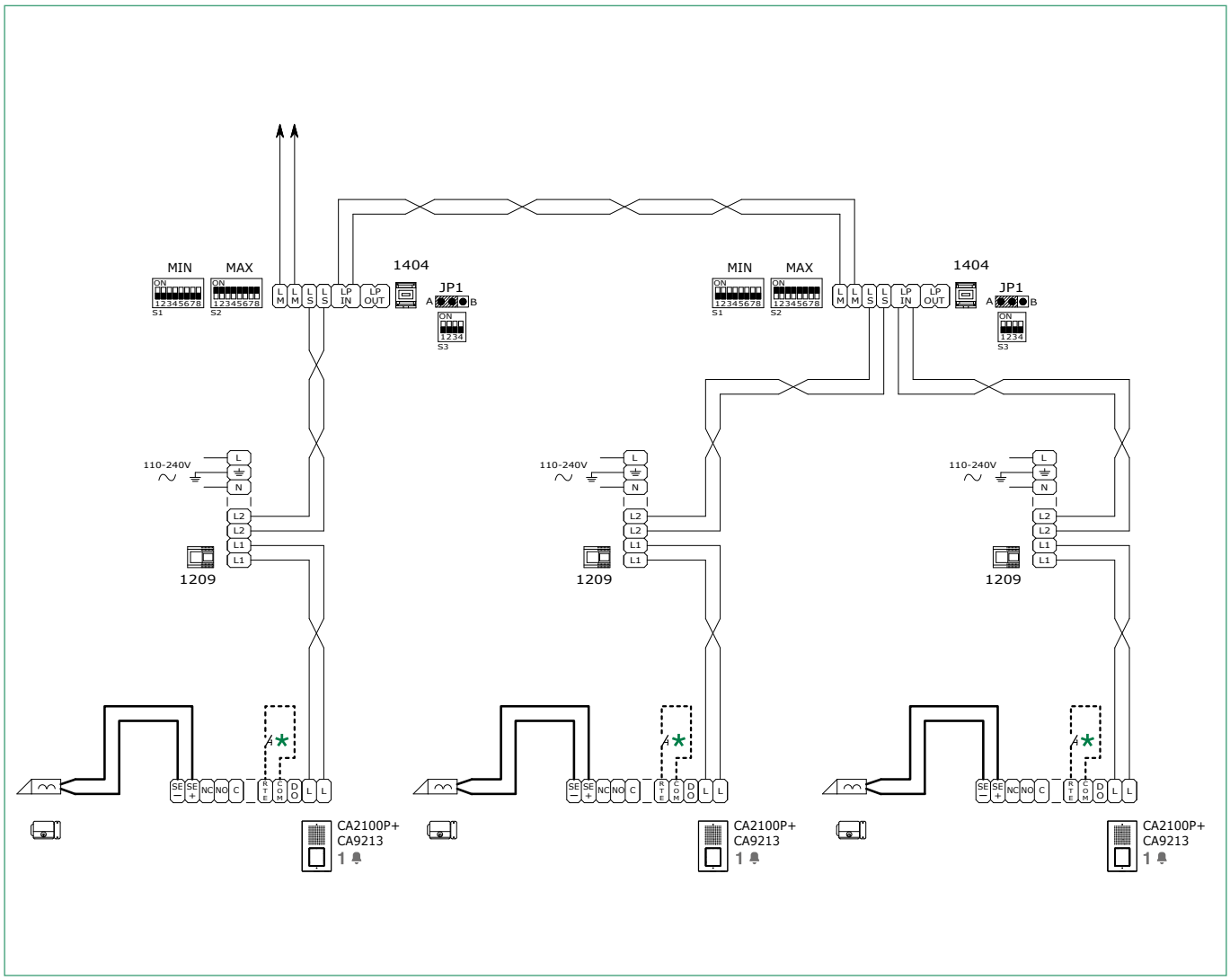

* **Max 20m.** Local lock-release button.

Door-entry phone system with two Single-family units and Main External Unit

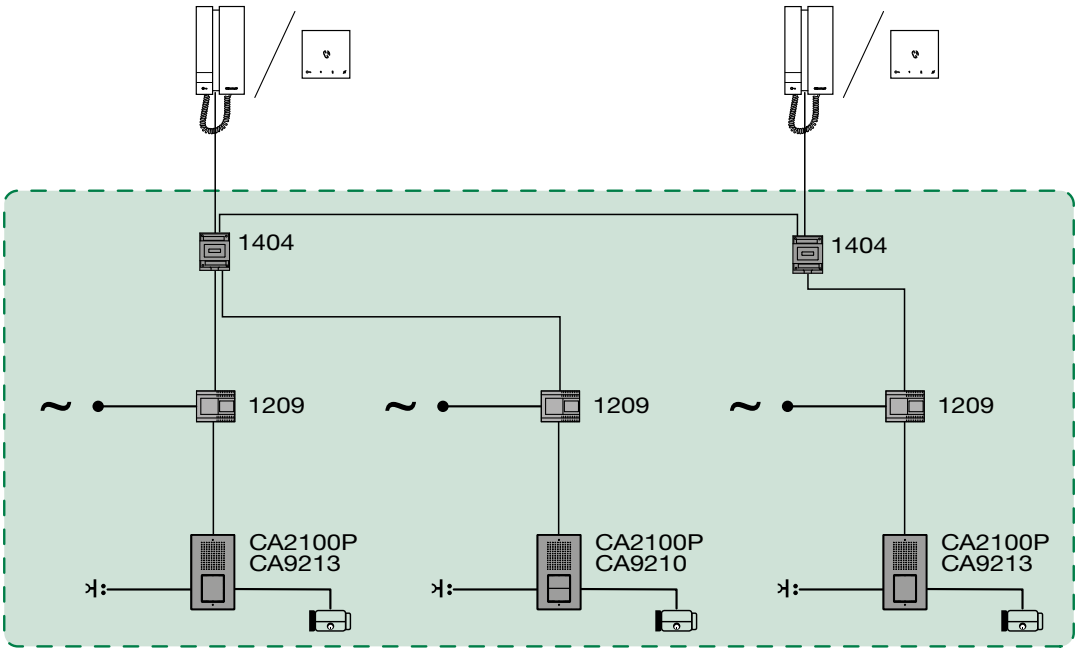

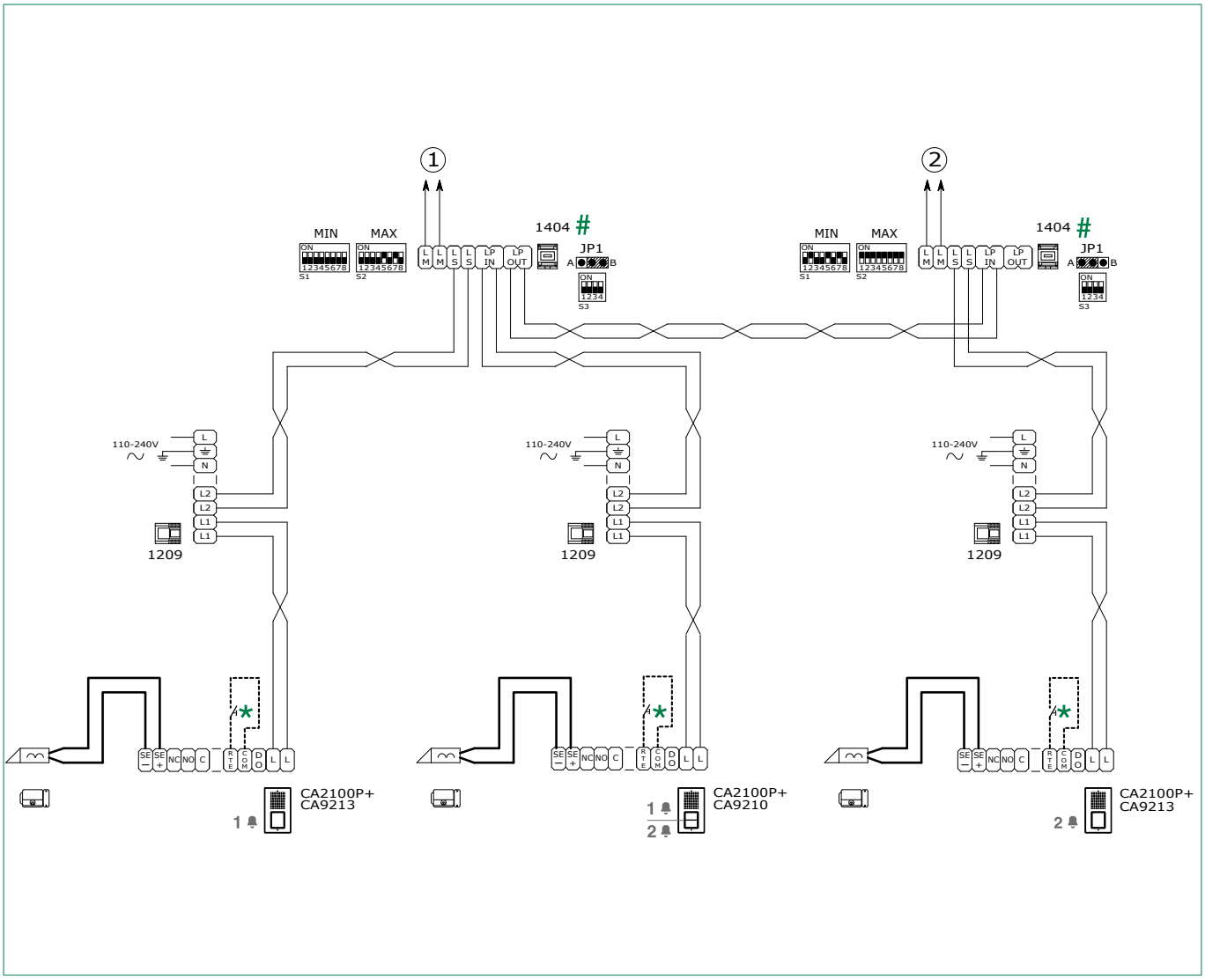

CAUTION! The code ranges managed by separate switching devices must not overlap.

* **Max 20m.** Local lock-release button.

Variant: adding door-entry phones in cascade

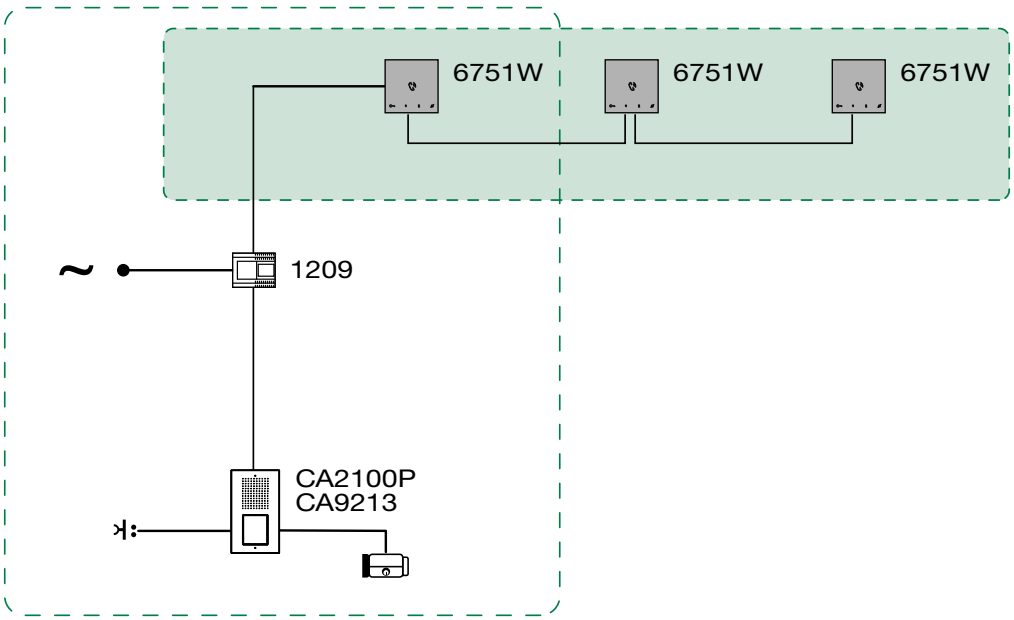

Kit KCA2071

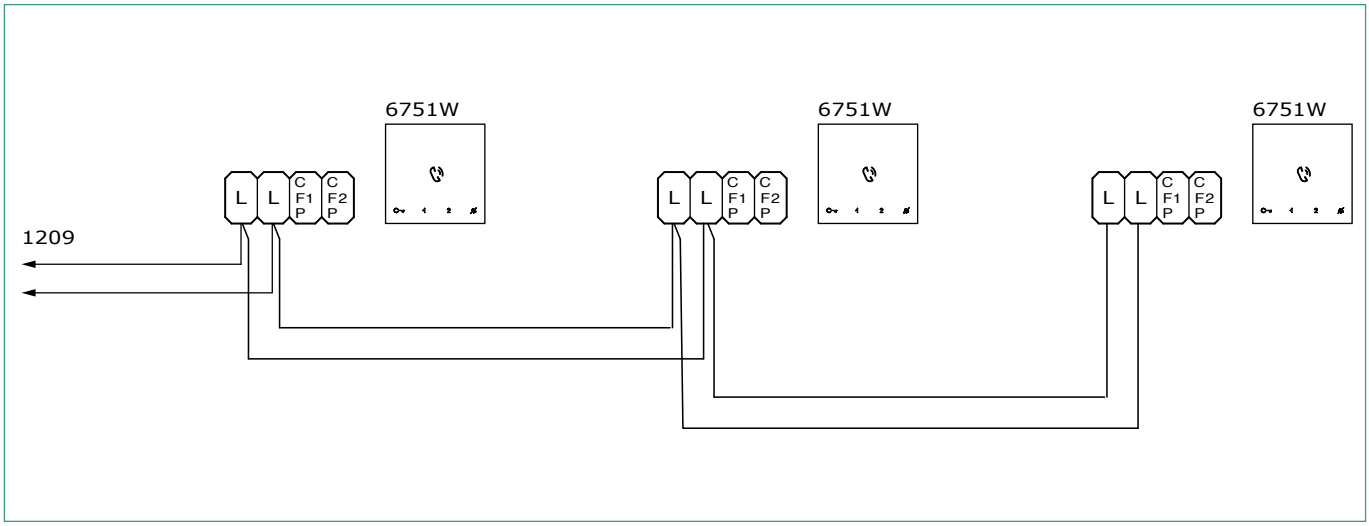

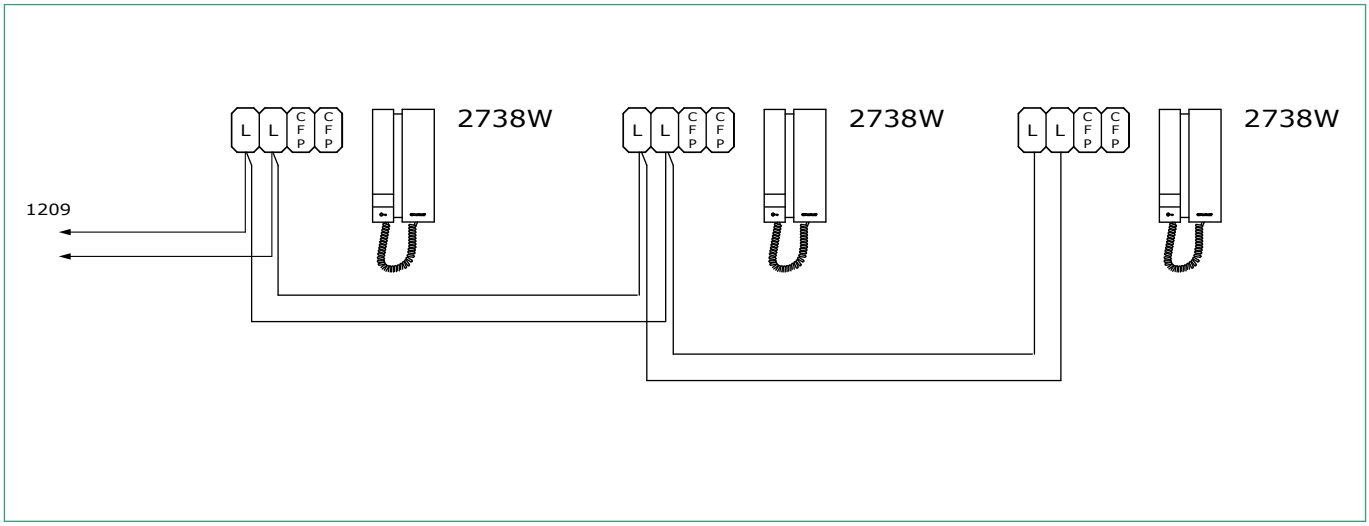

Use of actuator relay Art. 1256

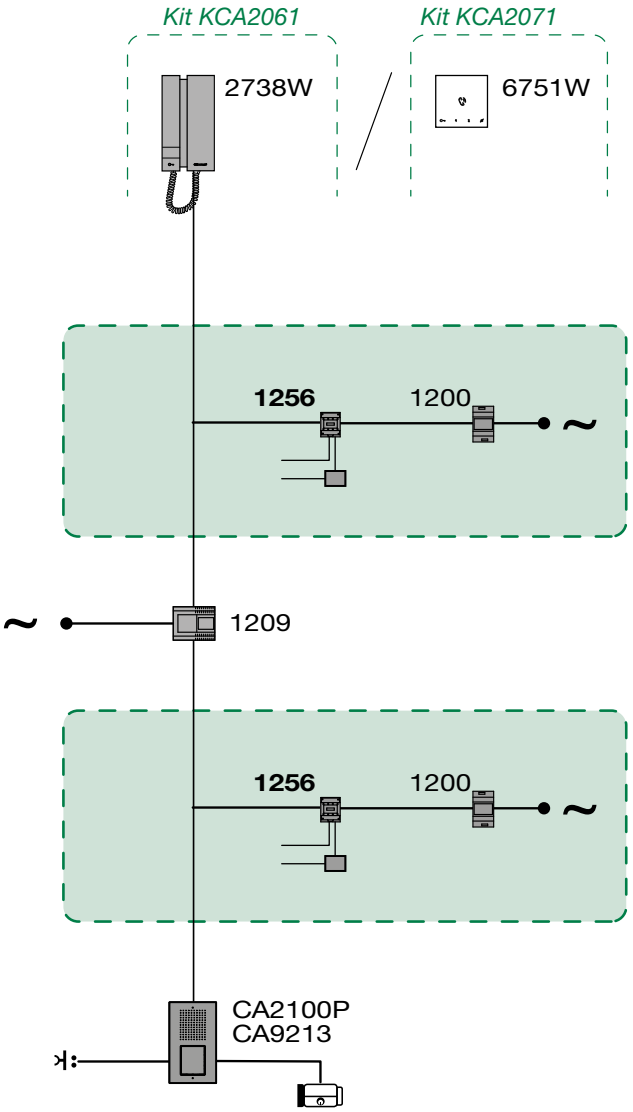

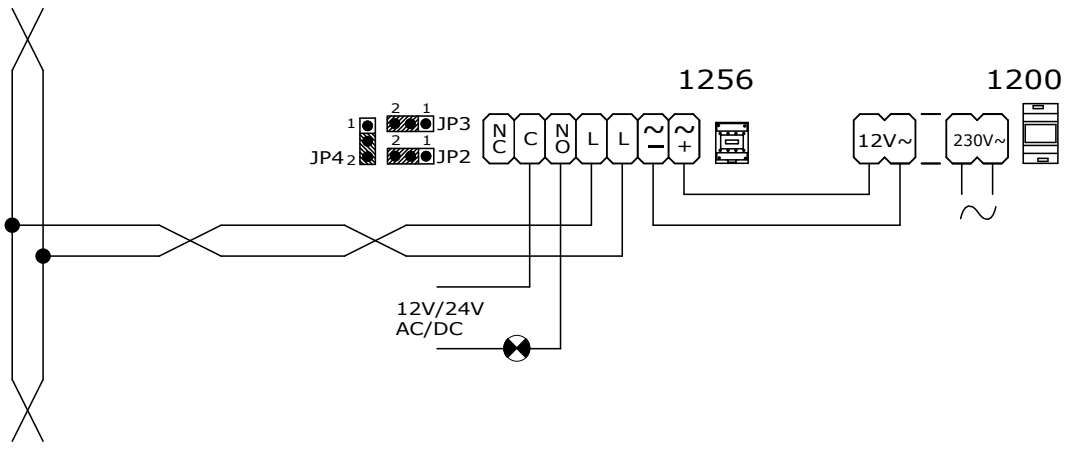

Use of remote camera module Art. 1409

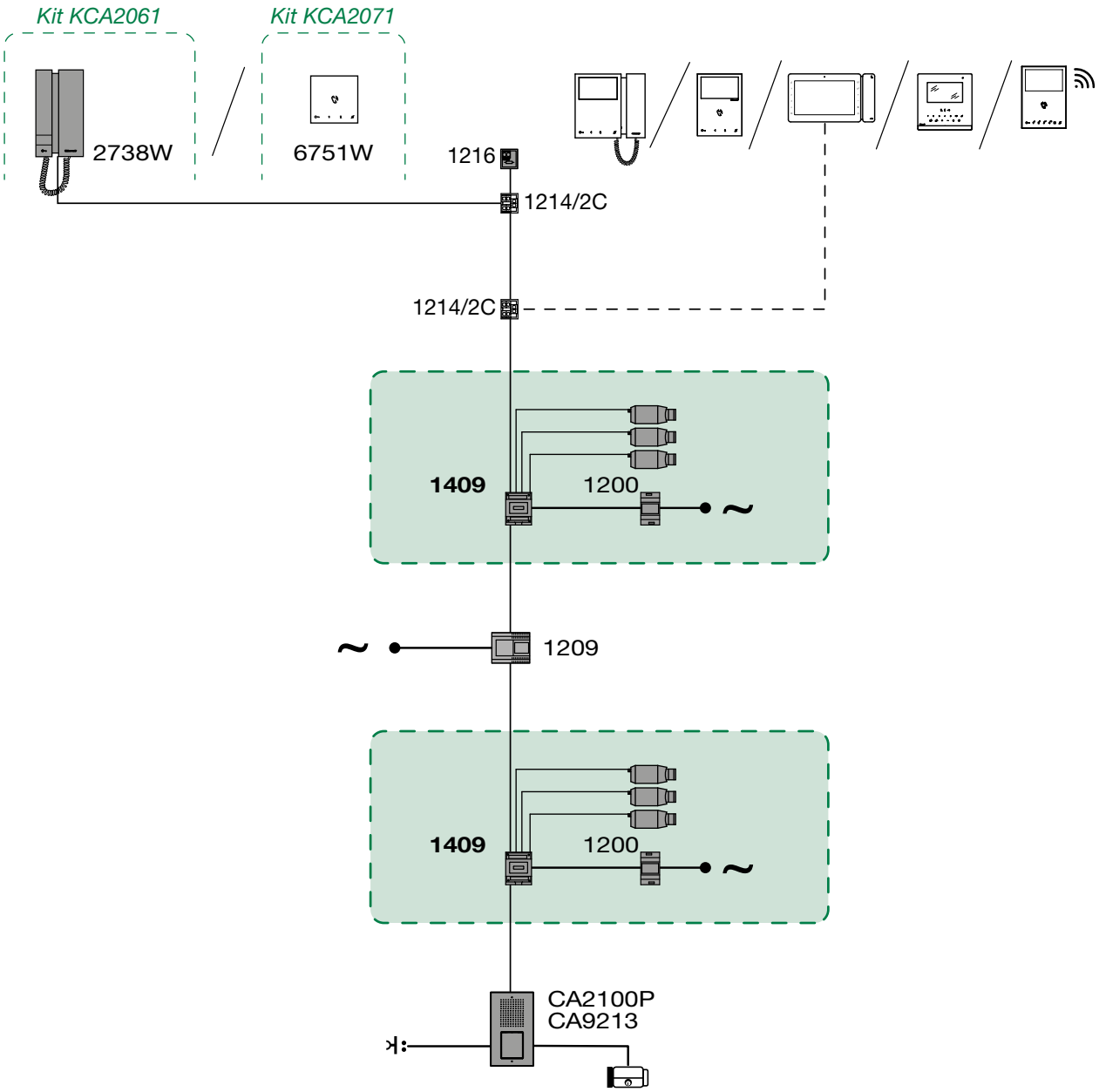

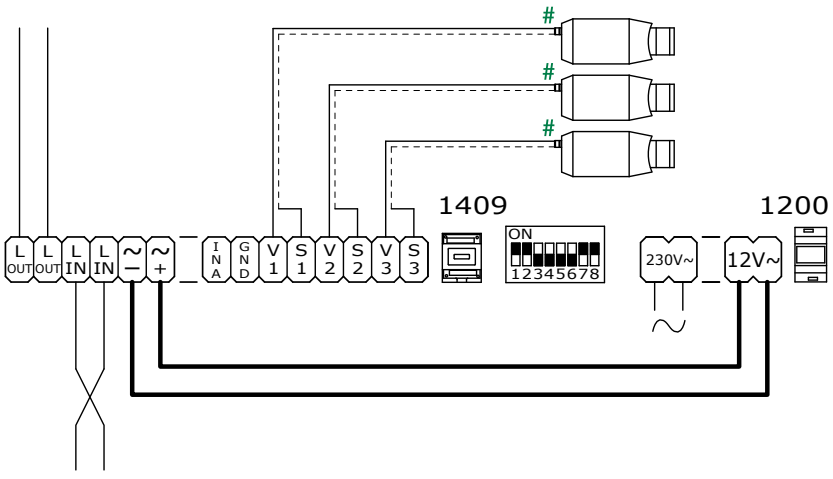

To be powered separately.

Use of additional bell Art. 1229A

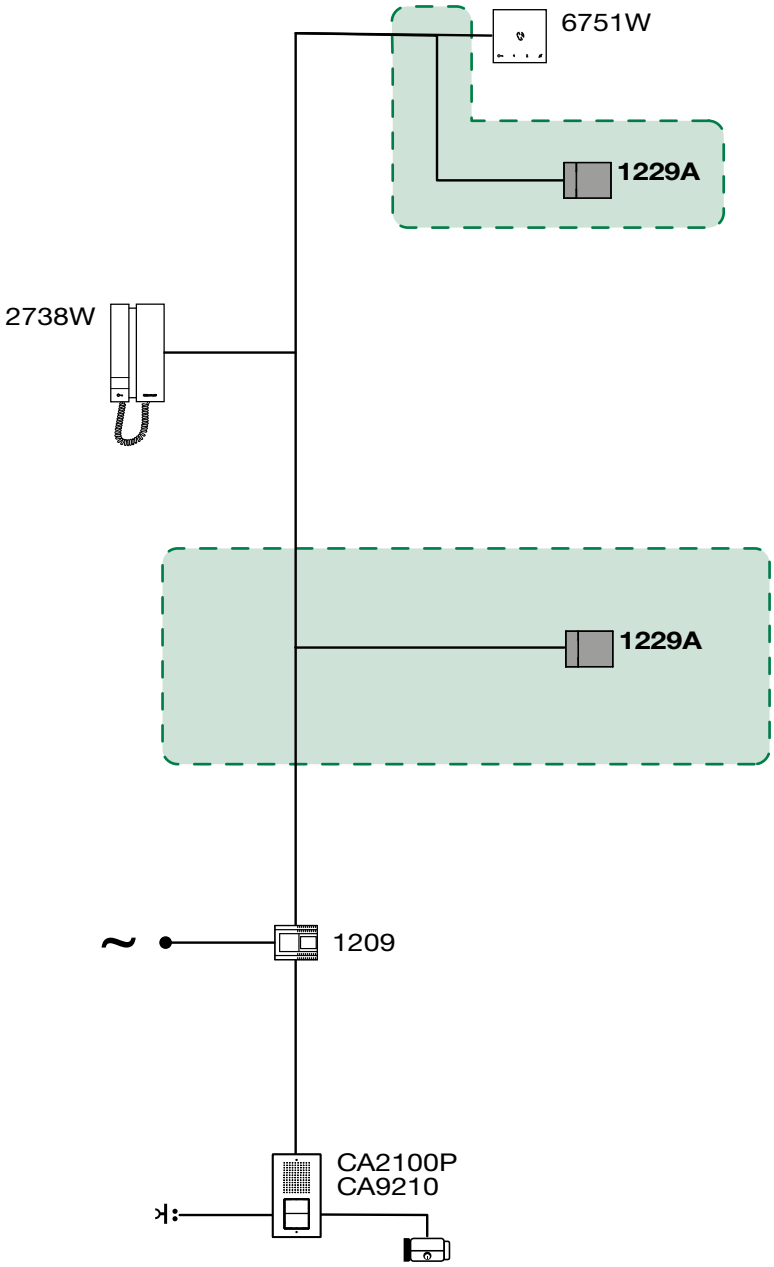

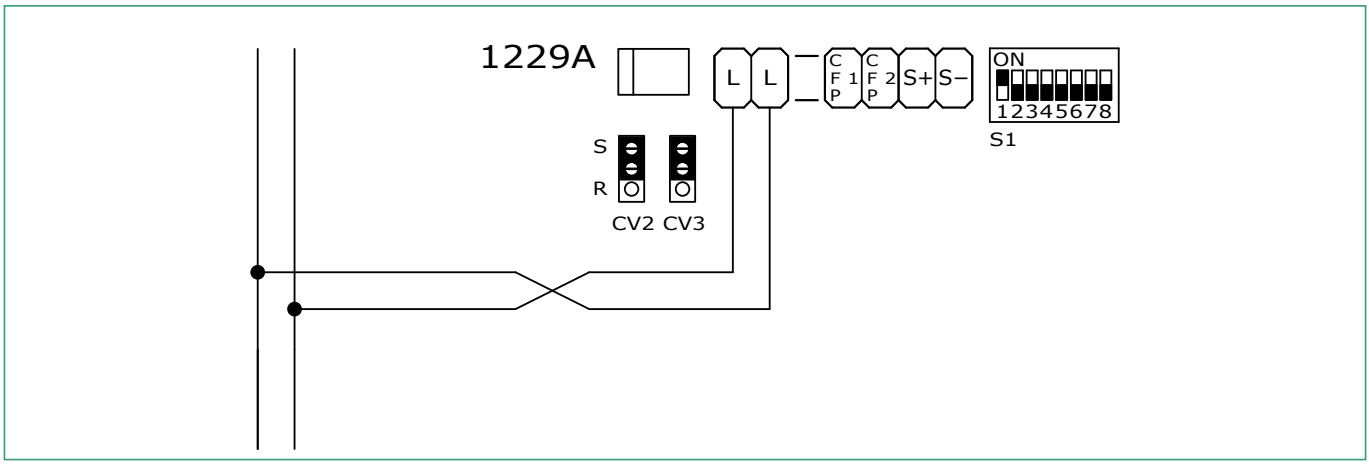

Table of contents

Warning

System performance **137**
- **Operating distances** **137**
- **Maximum system expansion** **138**
- **Maximum expansion per apartment** **138**
  - Example of maximum expansion per apartment 138

Wiring diagrams **139**
- **Audio entry phone system for condominiums** **139**
- **Variant with Ciao entrance panel** **140**
- **System with a 2 risers, one main entrance and n secondary entrances** .. **141**

System performance

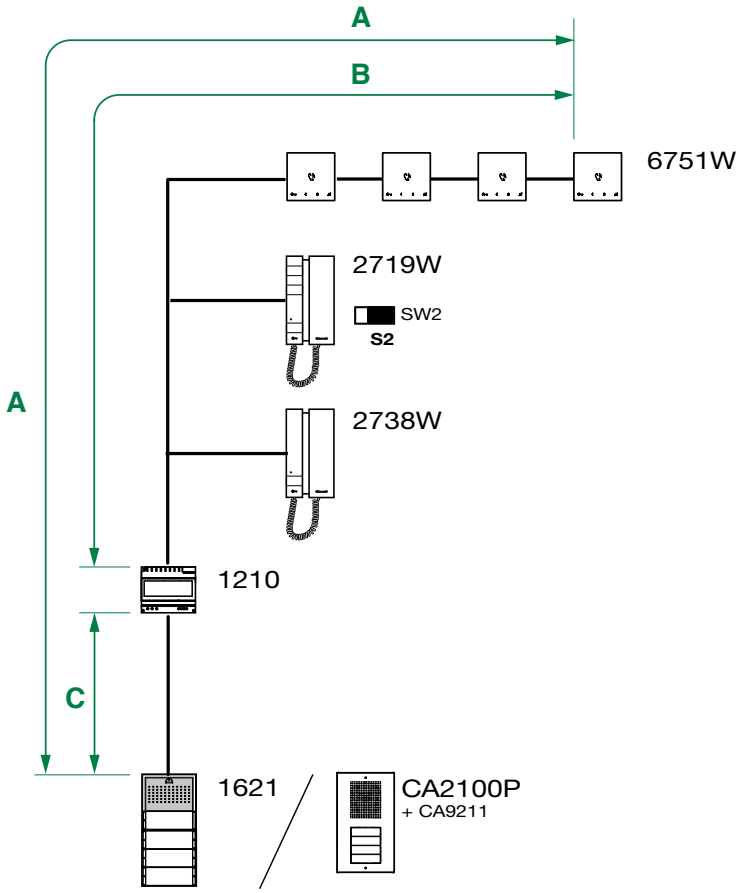

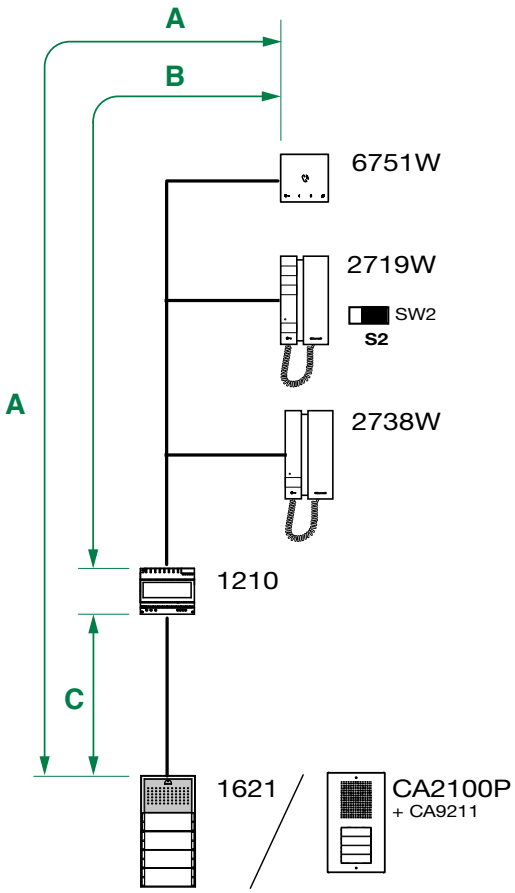

Operating distances

	A MAX	B MAX	C MAX
Comelit Art. 4577/4579 1 mm² (Ø 1,2 mm AWG 17)	**260 m** (850 feet)	**130 m** (425 feet)	**130 m** (425 feet)
UTP5 cat. 5 0,2 mm² (Ø 0,5 mm AWG 24)	**80 m** (260 feet)	**40 m** (130 feet)	**40 m** (130 feet)
0,28 mm² (Ø 0,6 mm AWG 23)	**100 m** (328 feet)	**50 m** (164 feet)	**50 m** (164 feet)
0,5 mm² (Ø 0,8 mm AWG 20)	**140 m** (460 feet)	**70 m** (230 feet)	**70 m** (230 feet)
1 mm² (Ø 1,2 mm AWG 17)	**200 m** (656 feet)	**100 m** (328 feet)	**100 m** (328 feet)
1,5 mm² (Ø 1,4 mm AWG 15)	**80 m** (260 feet)	**40 m** (130 feet)	**40 m** (130 feet)
UTP5 cat. 5 0,2 mm² (Ø 0,5 mm AWG 24) MULTI PAIR CABLE ⁜ 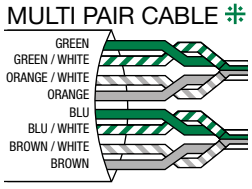	**260 m** (850 feet)	**130 m** (425 feet)	**130 m** (425 feet)

⁜ UTP cable with multi-cable connection: FOLLOW THE COLOURS SHOWN IN THE DIAGRAM!

Maximum system expansion

Devices	6751W	2738W	2719W
Maximum number of internal units that can be powered from art. 1210	100 *	100 *	100 *
Call repetition devices that can be used	1229A	1229A	1229A

* With Ciao entrance panel: the system can manage up to 72 users, connecting MAX 100 internal units for each riser

Maximum expansion per apartment

Devices	6751W	2738W	2719W
Maximum number of internal units (including call repetition devices) with the same user code	4	4	4

Example of maximum expansion per apartment

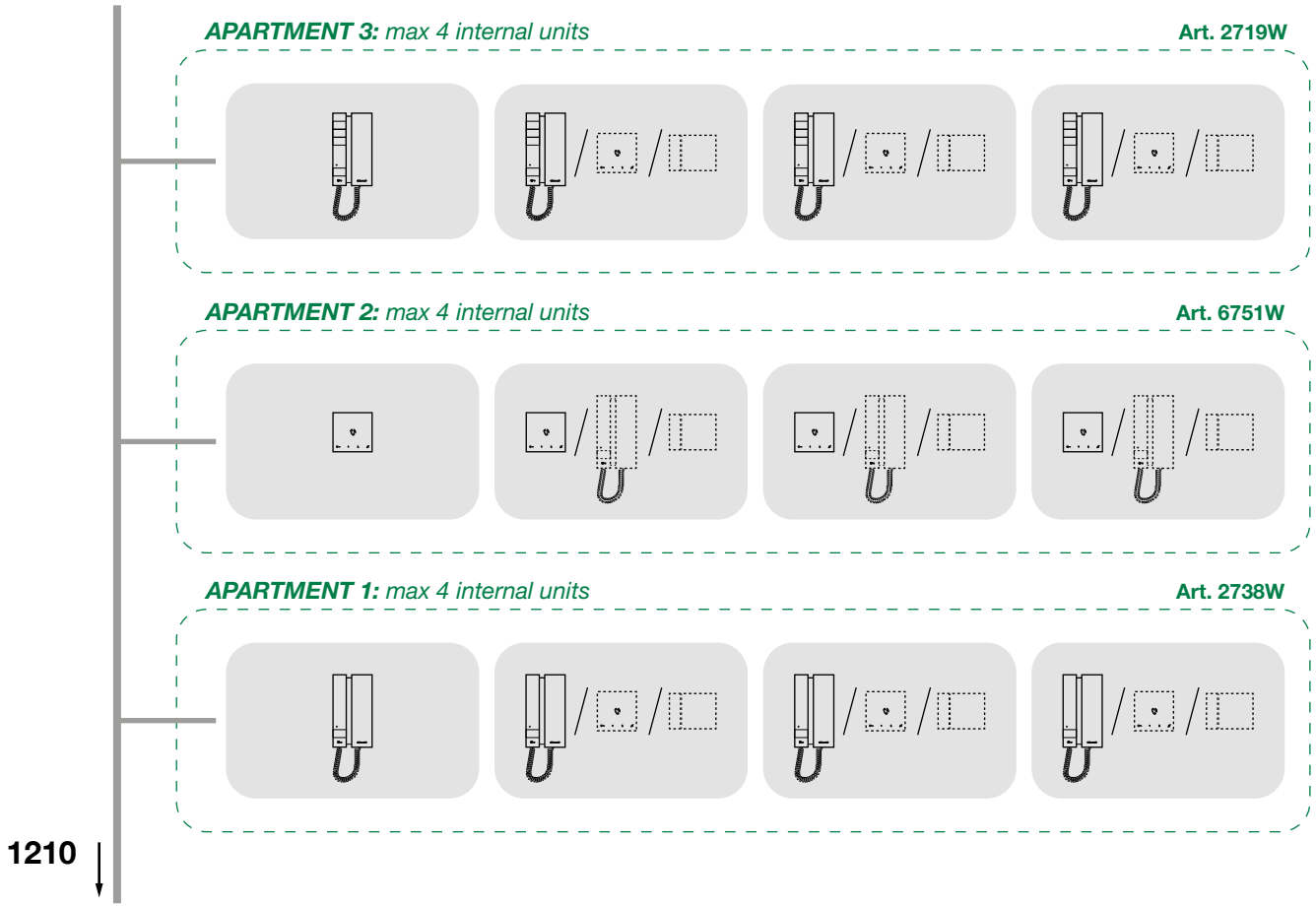

Wiring diagrams

Audio entry phone system for condominiums

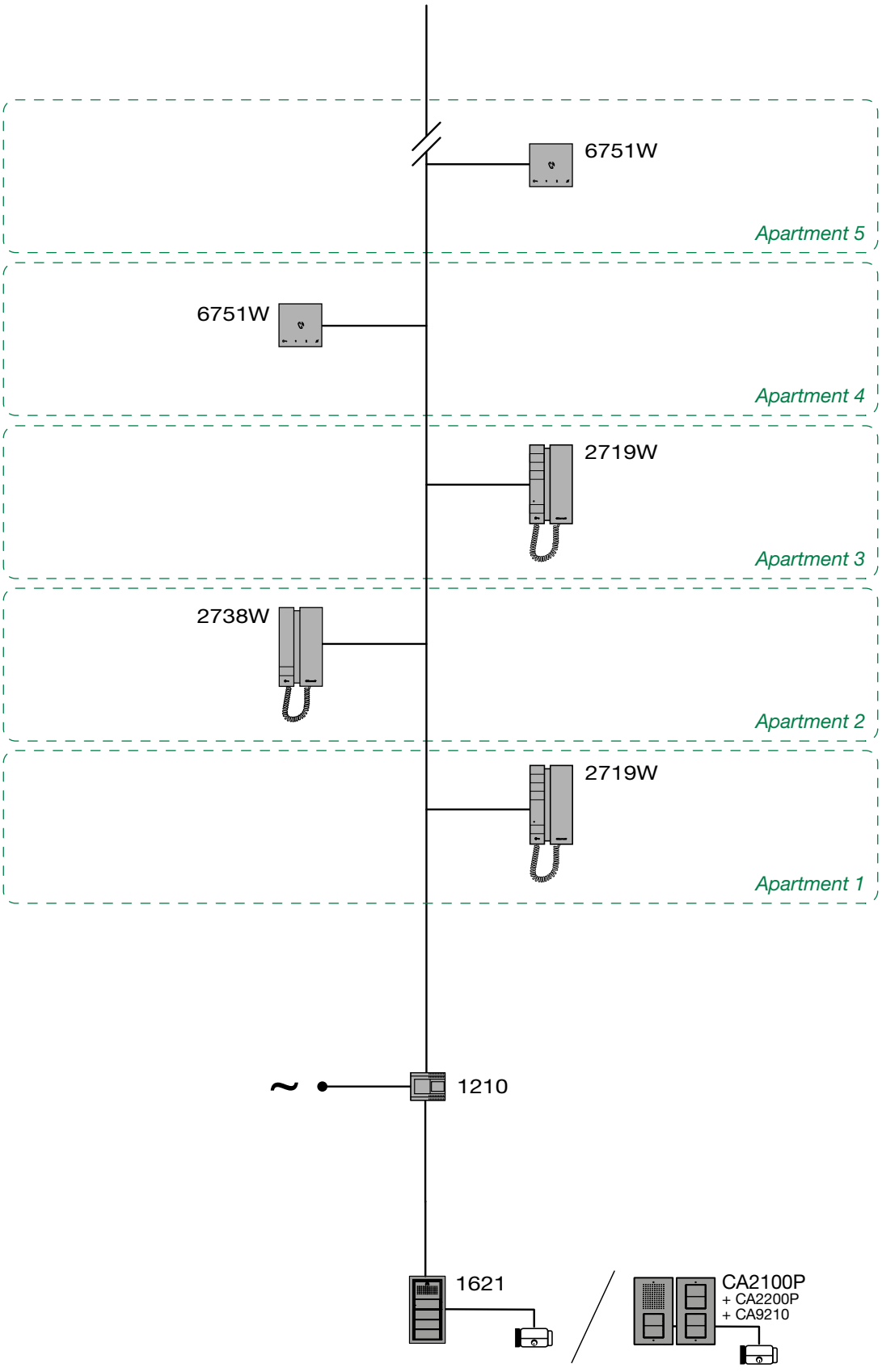

AUDIO ENTRY SYSTEM RISER

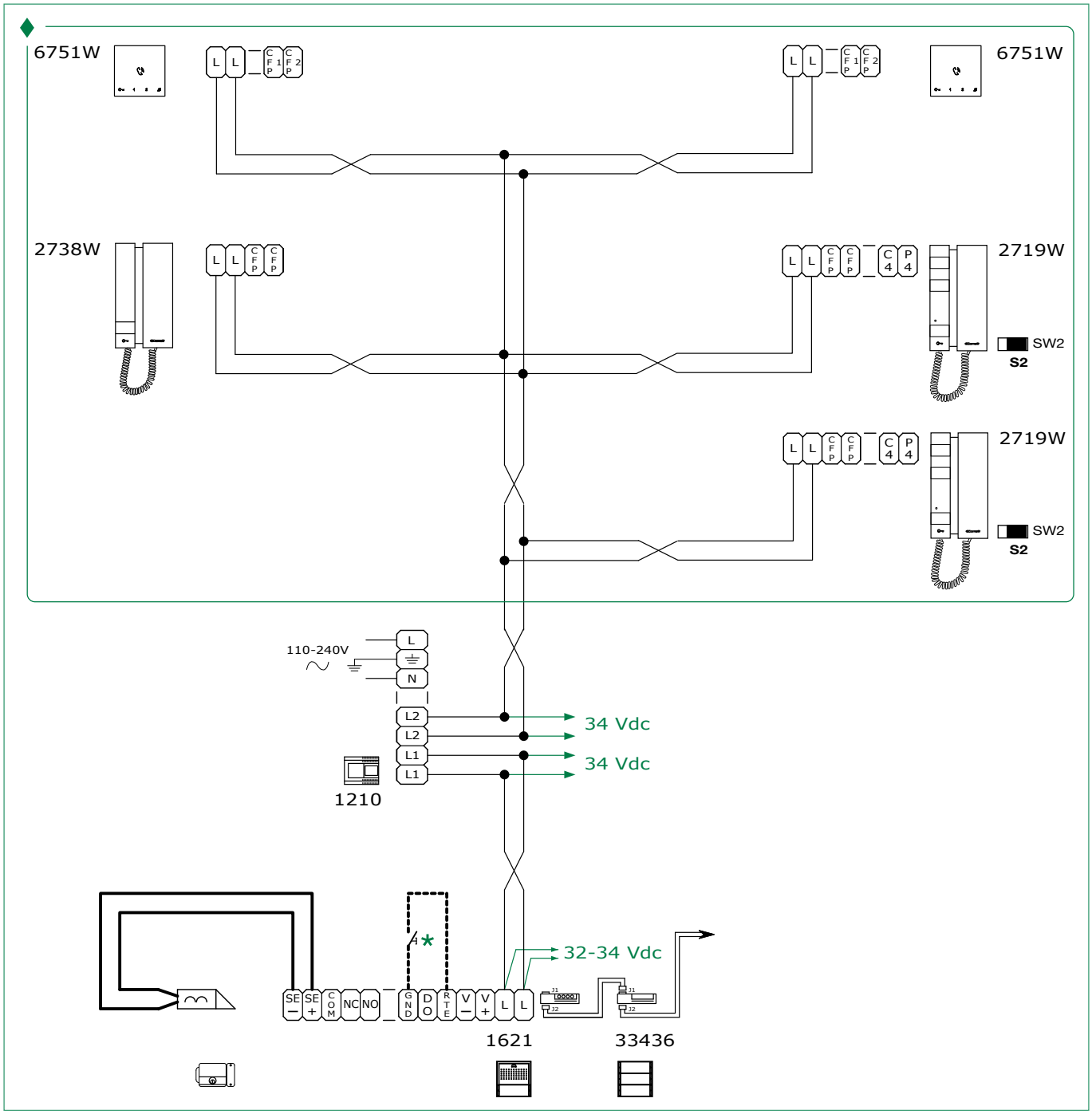

* **20 m Max.** Local lock-release button.

Variant with Ciao entrance panel

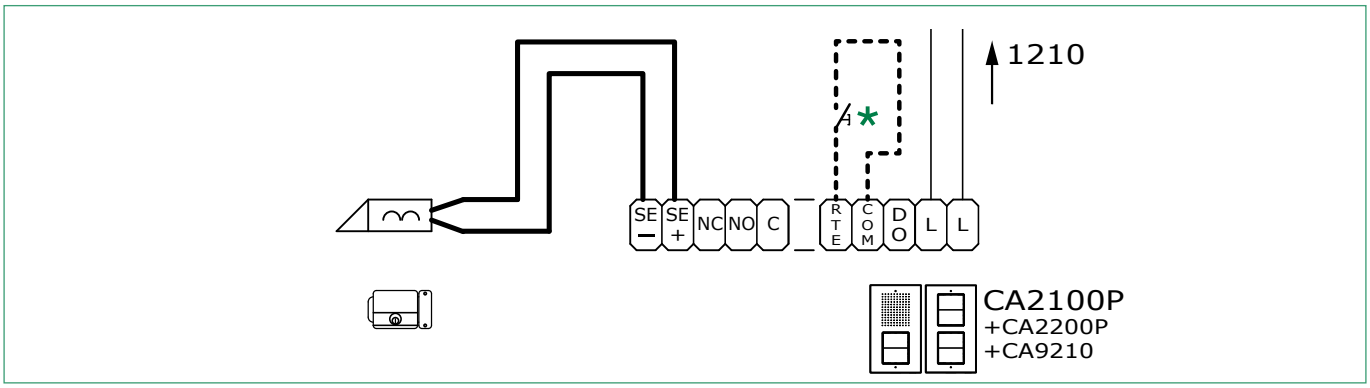

* **20 m Max.** Local lock-release button.

System with a 2 risers, one main entrance and n secondary entrances

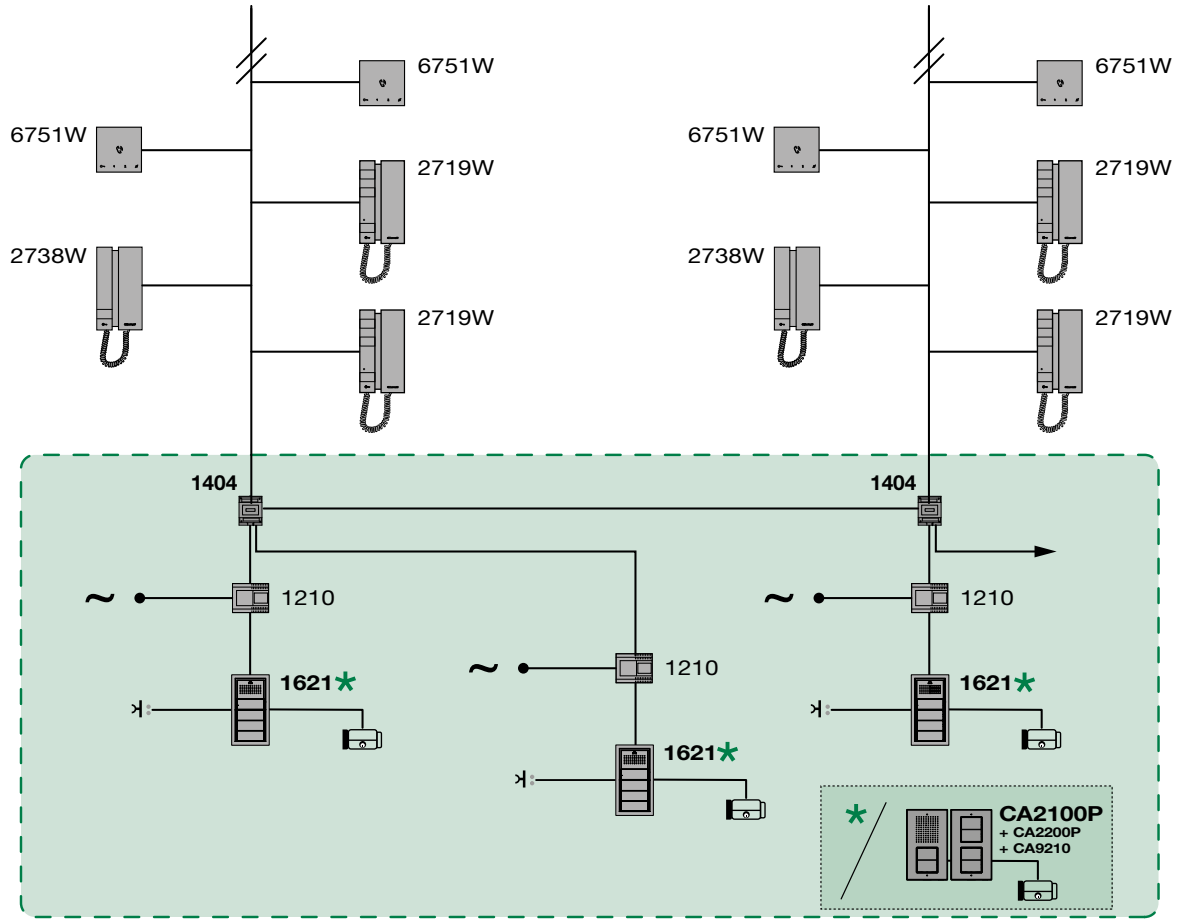

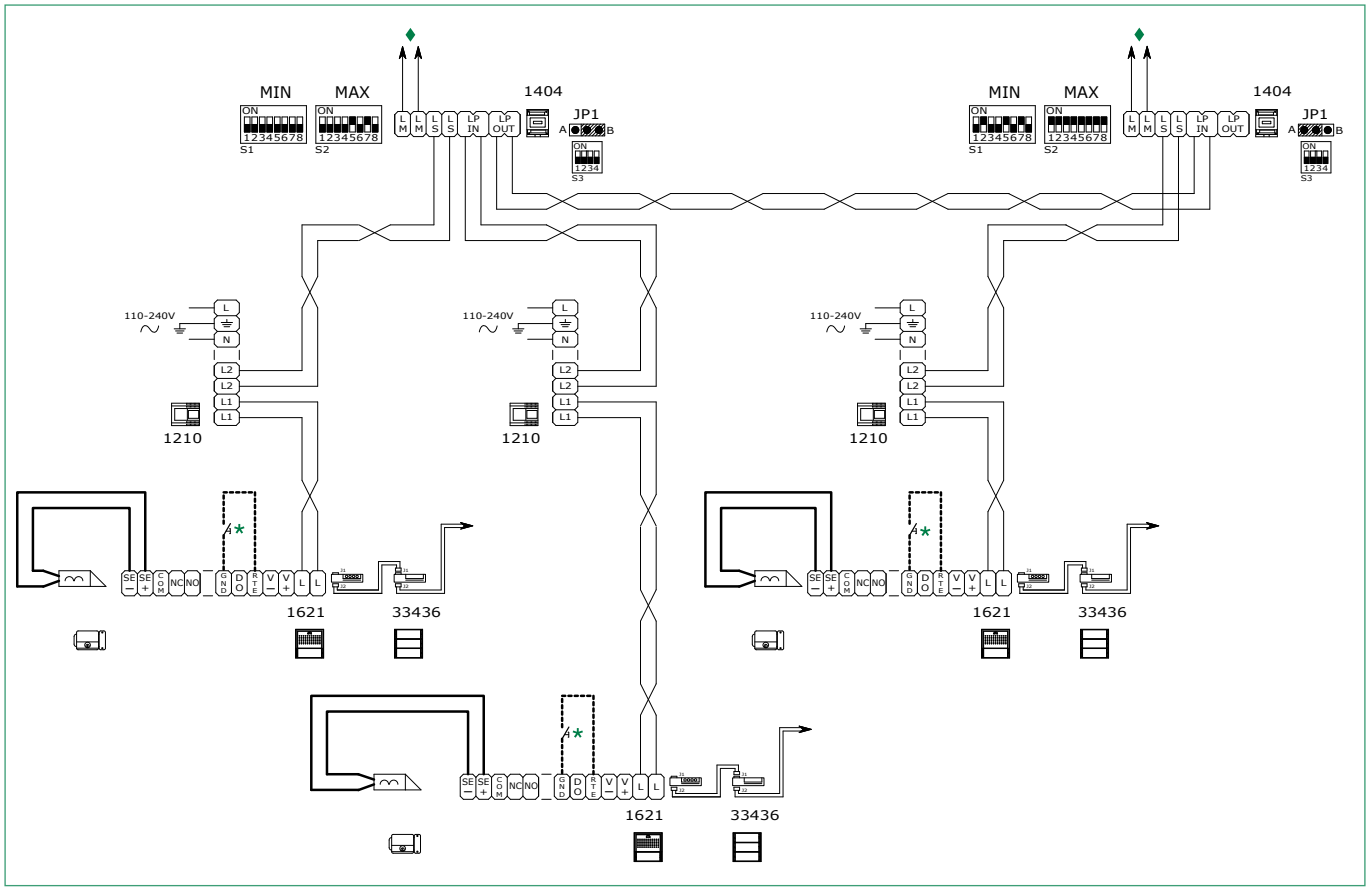

♦ Audio entry system riser (see: **"AUDIO ENTRY SYSTEM RISER"**)

* **20 m Max.** Local lock-release button.

Table of contents

Warning

System performance **143**

Operating distances **143**

Maximum system expansion **144**

Maximum expansion per apartment **144**

Example of maximum expansion per apartment 144

Wiring diagrams **145**

Audio entry phone system for condominiums **145**

Audio entry phone system for condominiums with 2 external units 147

System performance

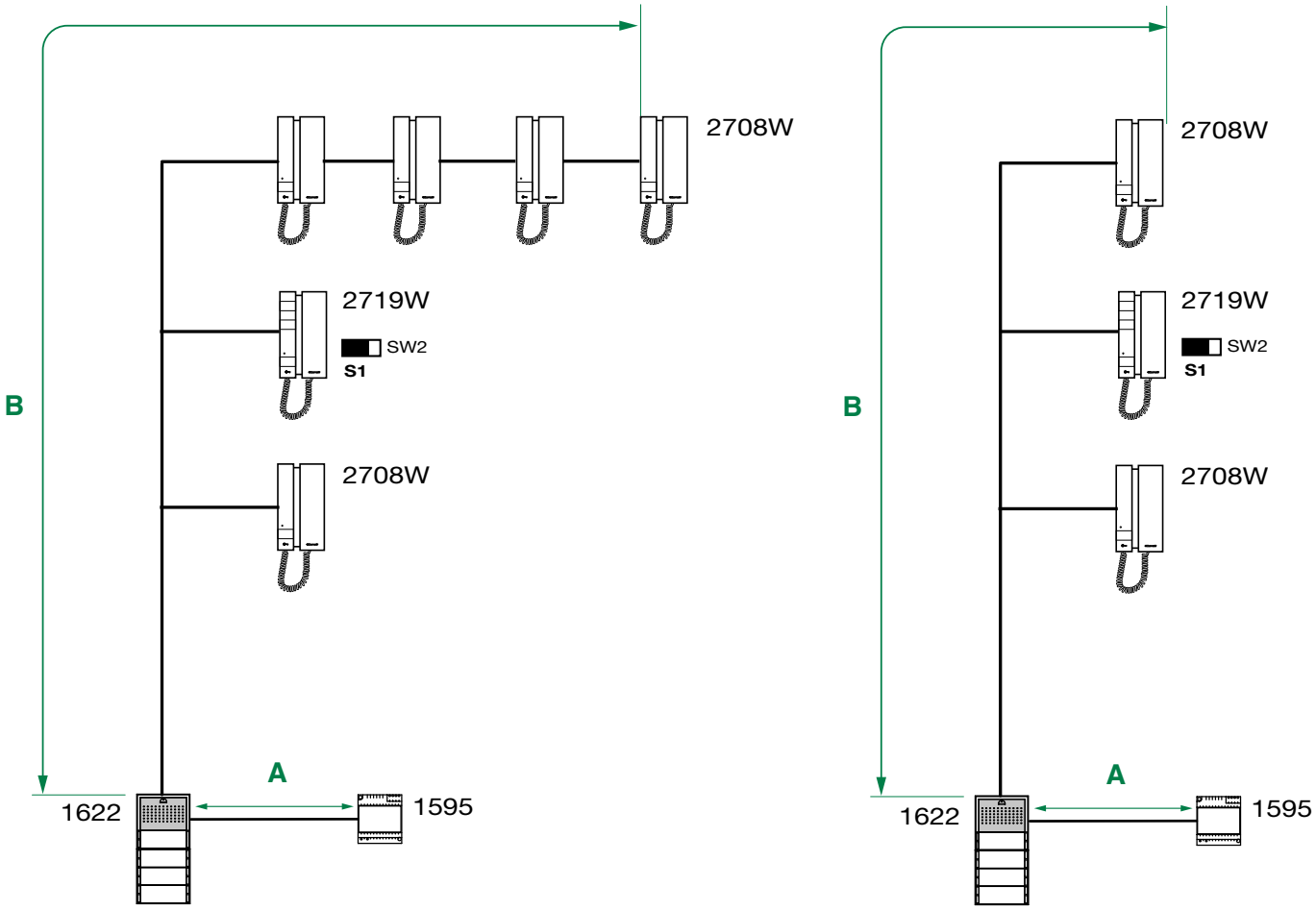

Operating distances

	A MAX	B MAX
1 mm² (Ø 1,2 mm AWG 17)	**50 m** (165 feet)	**500 m** (1625 feet)
0,28 mm² (Ø 0,6 mm AWG 23)	**5 m** (15 feet)	**300 m** (990 feet)
0,5 mm² (Ø 0,8 mm AWG 20)	**25 m** (85 feet)	**400 m** (1315 feet)
1,5 mm² (Ø 1,4 mm AWG 15)	**75 m** (245 feet)	**600 m** (1980 feet)
2,5 mm² (Ø 1,8 mm AWG 13)	**100 m** (330 feet)	**800 m** (2600 feet)

Maximum system expansion

Devices	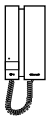 2708W	 2719W
Maximum number of internal units that can be powered from art. 1595	**100** *	**100**

* with 100 internal units the audio sound level is 74 dB(A), with 75 internal units the audio sound level is greater, at 77 dB(A)

Maximum expansion per apartment

Devices	 2708W	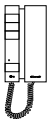 2719W
Max. number of internal units with the same user code	**4**	**4**

Example of maximum expansion per apartment

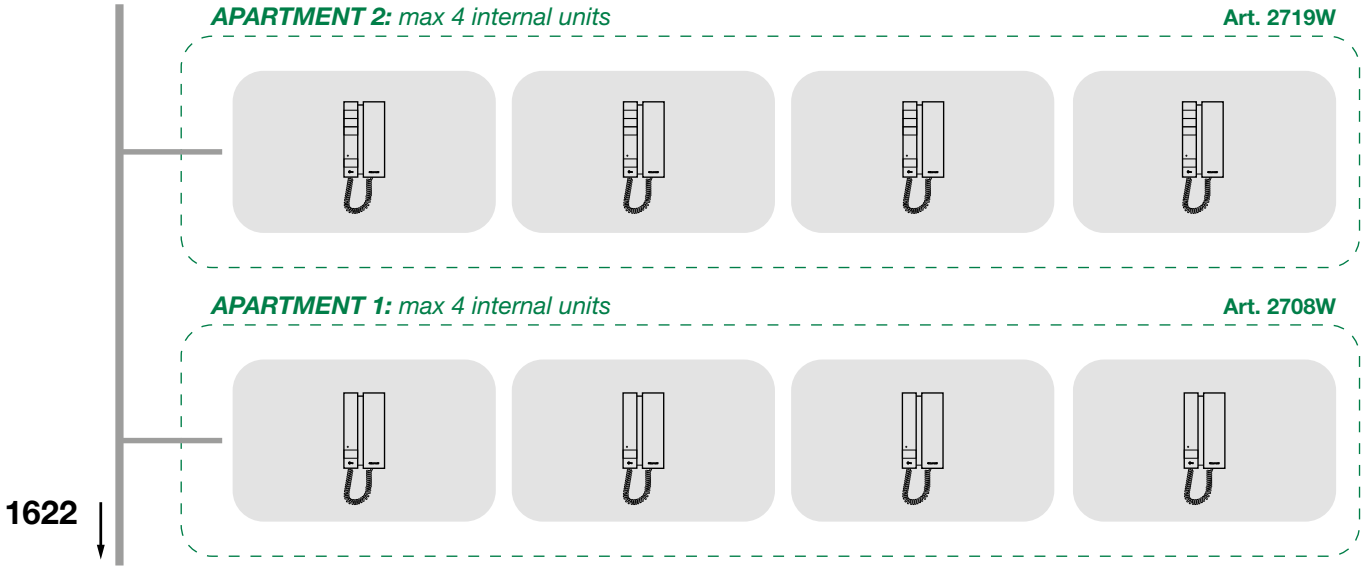

Wiring diagrams

Audio entry phone system for condominiums

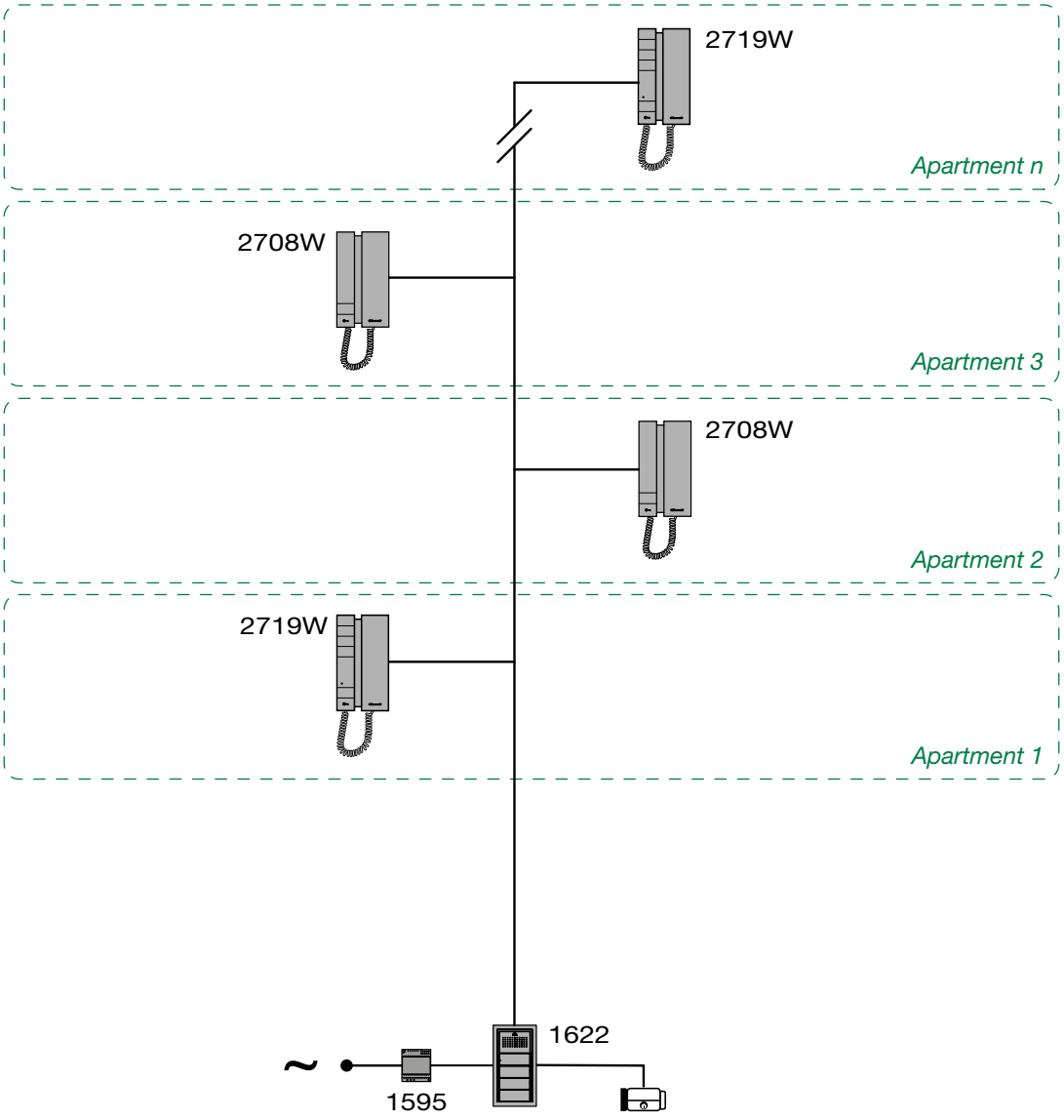

AUDIO ENTRY SYSTEM RISER

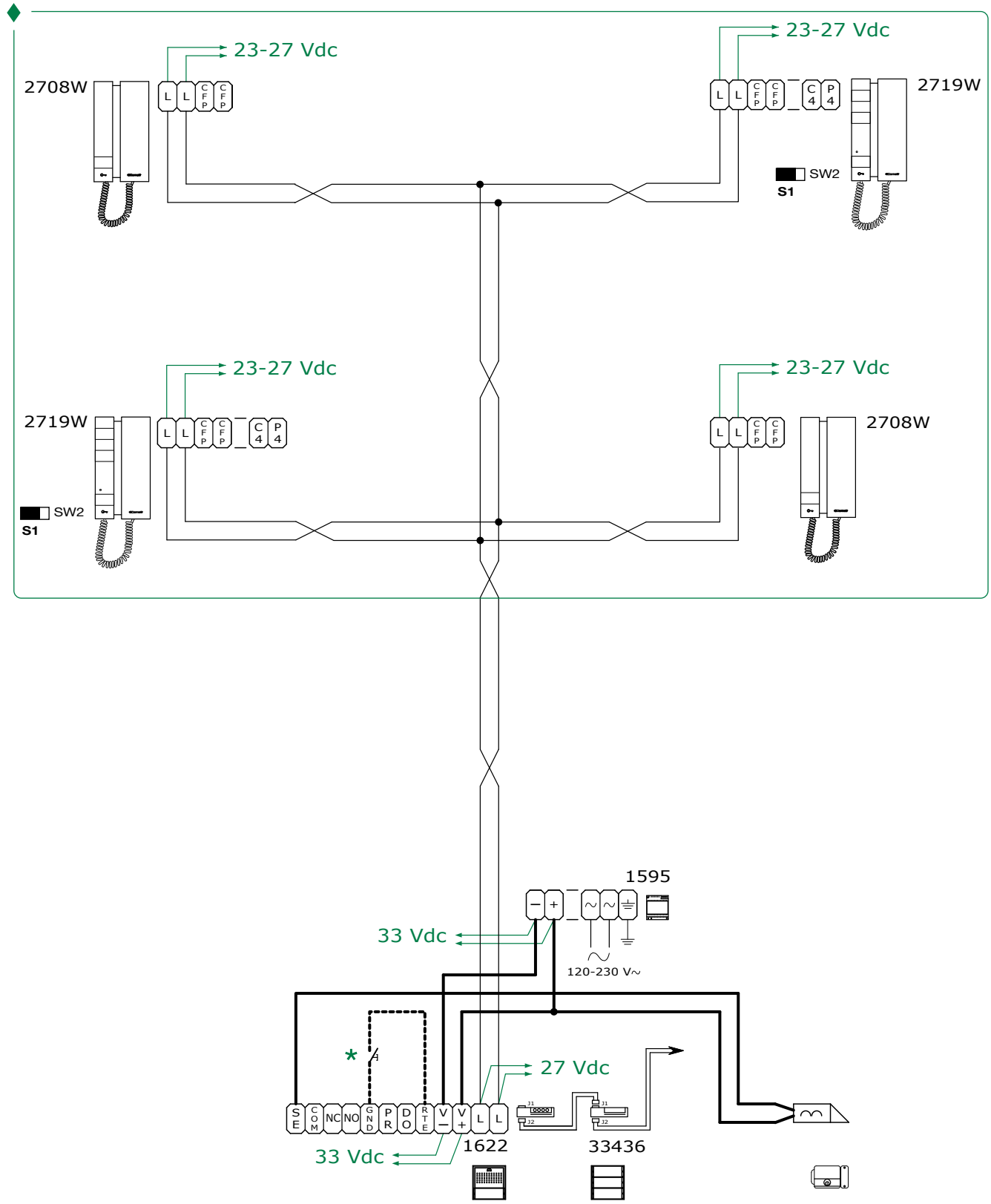

* **20 m MAX.** Local lock-release button.

Audio entry phone system for condominiums with 2 external units

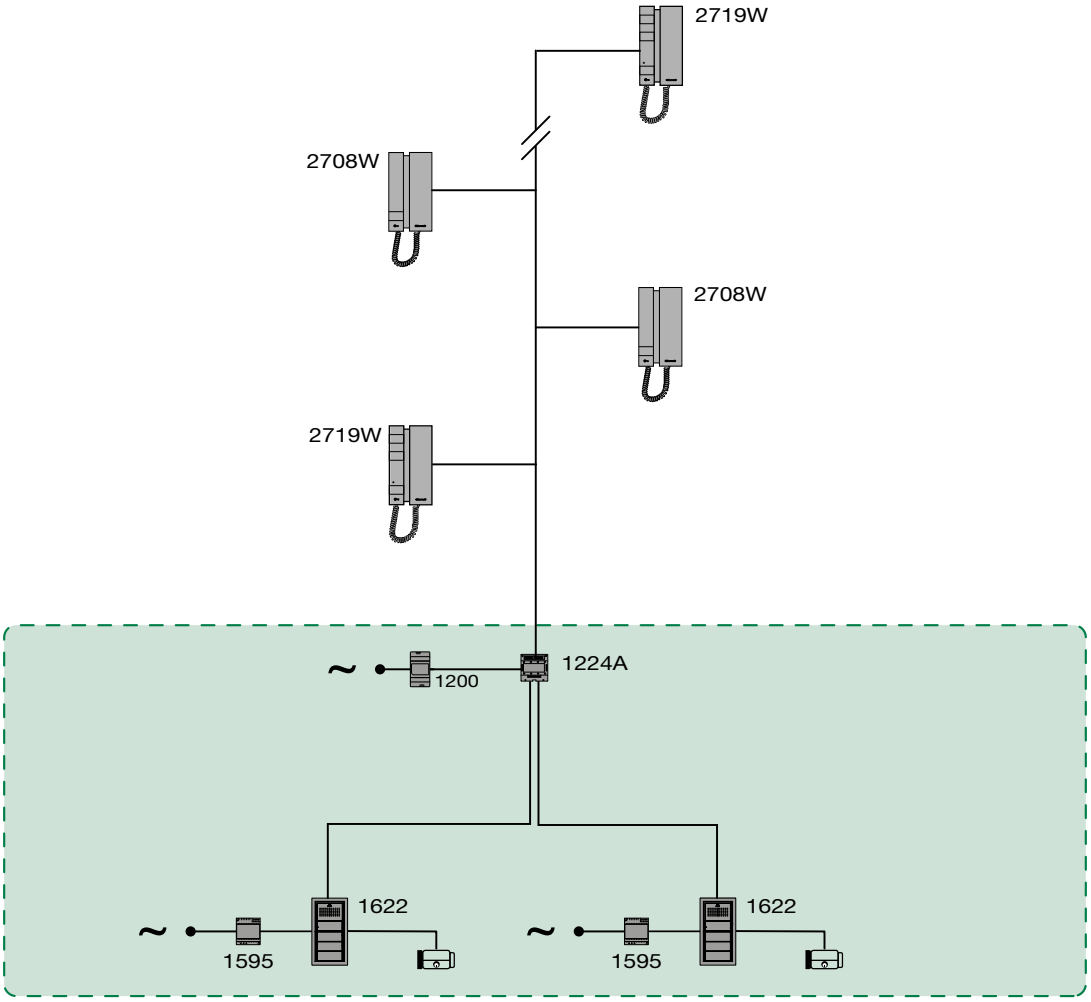

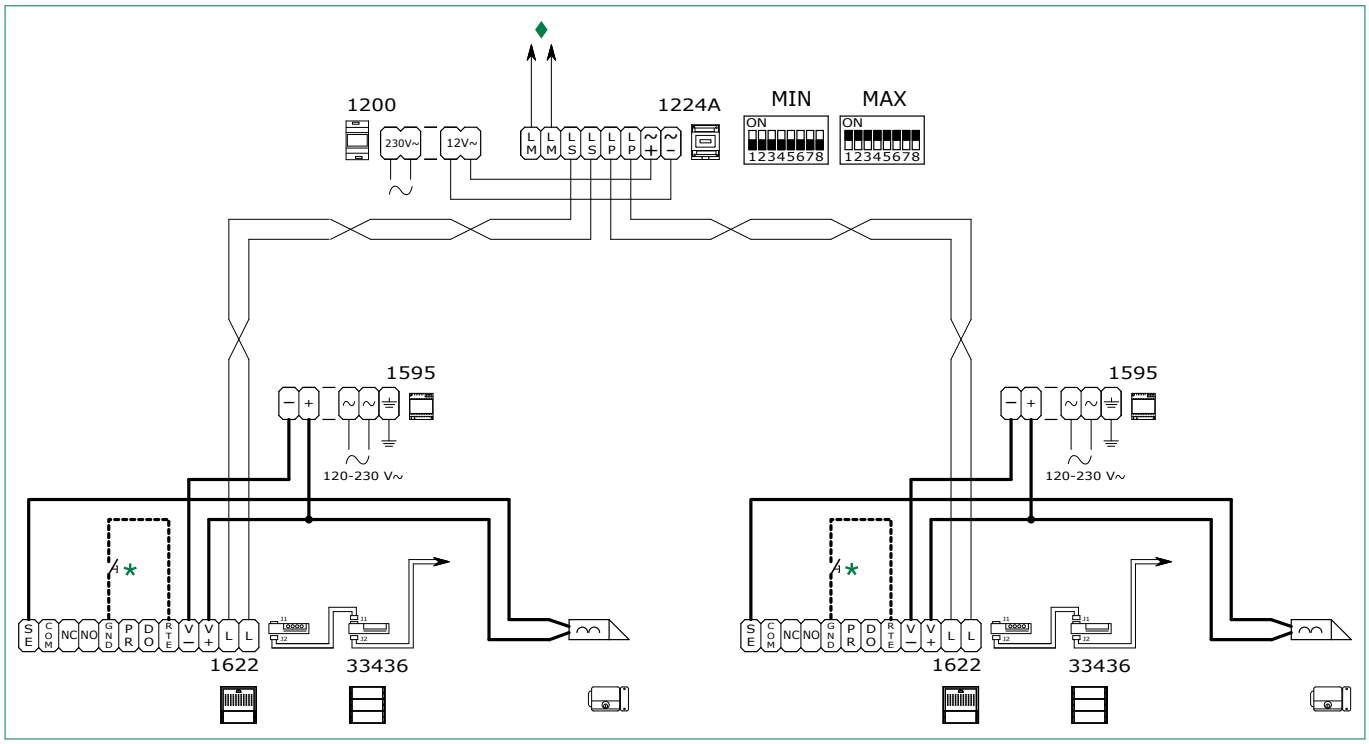

♦ Audio entry system riser (see: **"AUDIO ENTRY SYSTEM RISER "**)

✱ **20 m MAX.** Local lock-release button.

Table of contents

Warning

Description 149
- Art. 4681 - Compatibility table 149
- Art. 1621VC - Compatibility table 149

Cables for remote camera connection (Art. 1621VC only) 150

Technical specifications 151
- **Art. 4681 ..... 151**
- **Art. 1621VC 151**

External unit installation 152

Connections 154
- **4681, 1621VC connections 154**
- **4681, 1621VC connections with separate power supply 154**
- **Remote camera connection (Art. 1621VC only) 154**
- **Variants 155**

Module connection 156
- **External unit module consumption table 156**
- **Ikall / Ikall Metal modules 157**
  - Connection of button modules 33433, 33434, 33436, 33433M, 33434M, 33436M 157
  - Connection of Art. 3348B, 3348BM 157
  - Connection of Art. 3360B, 3360BM 157
- **Vandalcom modules 158**
  - Connection of Art. 3064S and Art. 1172B 158
  - Connection of Art. 3064S and Art. 1172B with additional power supply 158
  - Connection of Art. 3188A 159
  - Connection of Art. 3070S, 3072S 159
- **Modules for Single-plate external unit 160**
  - Connection of Art. 3063D 160
  - Connection of Art. 3063D with additional power supply 160
- **Simplekey modules 161**
  - Connection with Art. SK9015 for connection of readers Art. SK9000I and Art. SK9001I 161

Button programming 162

Special programmes 163
- **Installation information 165**

System performance and layouts 165

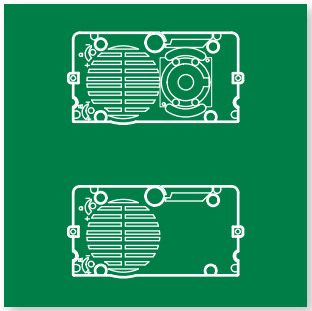

Audio/video module for 2-wire system
Art. 4681 / 1621VC

Description

*Article **4681** is a colour audio-video module which is compatible with Comelit "Building Kit" video entry systems (exclusively 2-wire), exclusively for use in conjunction with riser power supply unit Art. 1210.*

It can be installed in Ikall, Ikall Metal, Vandalcom, Roma and "N" Series external units and can be finished with additional modules to meet all system requirements.

Art. 4681 - Compatibility table

Ikall		*Ikall Metal*	*Vandalcom*	*Roma*	*"N" Series*
 33410		 33410M	 3268S/0	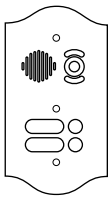 32xx/RI	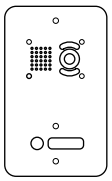 30xxNV
 33411	 33411A	 33411M	 3268S/1		
 33412	 33412A	 33412M	 3268S/2		

*Item **1621VC** is an audio module allowing connection of a remote colour PAL camera. It is compatible with Comelit "Building Kit" video entry systems (2 pure wires), exclusively for use in conjunction with riser power supply unit Art. 1210.*

It can be installed in Ikall, Ikall Metal, Vandalcom, Roma and "N" Series external units and can be finished with additional modules capable of fulfilling all system requirements.

Art. 1621VC - Compatibility table

Ikall		*Ikall Metal*	*Vandalcom*	*Roma*	*"N" Series*
 33400		 33400M	 3262S/0	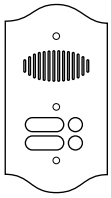 30xx/RI	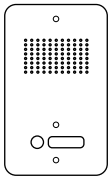 30xxNA
 33401	 33401A	 33401M	 3262S/1		
 33402	 33402A	 33402M	 3262S/2		

To make use of the indicator LEDs (busy, call sent, door opened, communication active) **faceplates from kit 33400K are available to purchase separately for the IKALL series.**

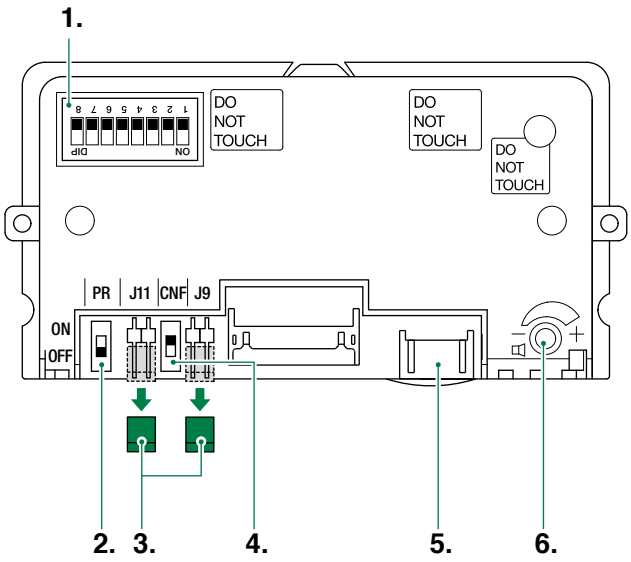

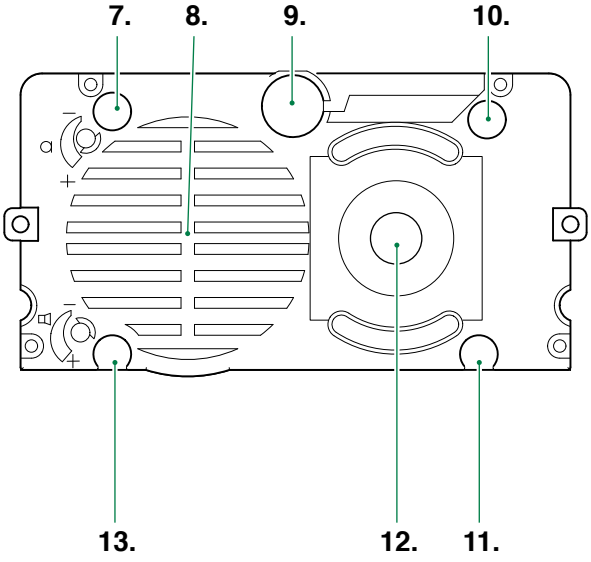

1. **S1** DIP switches for function programming and setting the user code.
2. **PR** switch for input/output programming.
3. **J11 and J9** jumper for power supply management. Remove both in the case of a separate power supply.
4. **CNF** switch for confirming special programmes.
5. The connector is reserved for module 1621VC, for the connection of the remote camera.
6. Loudspeaker volume control.

7. Indicator LED: call sent.
8. Speaker.
9. Microphone.
10. Indicator LED: system busy.
11. Indicator LED: sound activated.
12. Colour camera (with Art. 4681 only).
13. Indicator LED: lock-release activated.

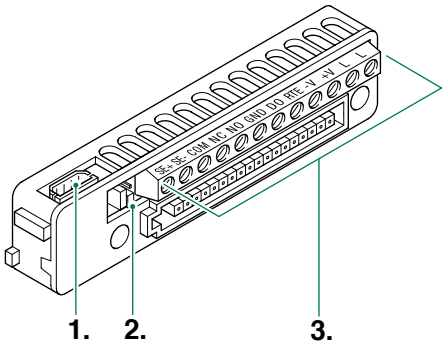

1. 8-pole cable connector.
2. **JP1** RC network management for door lock filter on relay contacts (see **"Variant for using the external unit relay/ Variant for using a safety lock"**).
3. Terminal block for connection:

SE+ SE-	electric lock connection
COM	common relay contact
NC	normally closed relay contact
NO	normally open relay contact
GND	input reference negative for DO-RTE
DO	door opened signal input
RTE	local lock-release input
V-	power supply negative
V+	power supply positive
LL	bus line connection

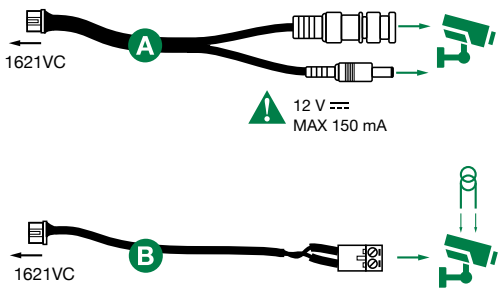

Cables for remote camera connection (Art. 1621VC only)

Use cable **A** to power the camera from the external unit (12V- 150 mA MAX).

Use cable **B** if the camera is powered separately.

Technical specifications

Art. 4681

MAIN SPECIFICATIONS	
Simplebus Top system	No
Compatible with the Building Kit System	Yes
Vip system	No
Audio system	No
Audio/video system	Yes
Camera	Colors
Video encoding	Mpeg
Type of sensor	1/3'' CCD
Horizontal resolution (TVL)	540TVL
Minimum illumination	0,35lux
Lens size	3,6mm
Camera orientation	Yes
Clamps	L L V+ V- RTE DO GND SE- SE+ COM NC NO
Microphone	Yes
Microphone volume control	No
Loudspeaker	Yes
Loudspeaker volume control	Yes
Relative humidity for operation	25 % - 75 %

Art. 1621VC

MAIN SPECIFICATIONS	
Simplebus Top system	No
Compatible with the Building Kit System	Yes
Vip system	No
Audio system	No
Audio/video system	Yes
Clamps	L L V+ V- RTE DO GND SE- SE+ COM NC NO
Microphone	Yes
Microphone volume control	No
Loudspeaker	Yes
Loudspeaker volume control	Yes
Relative humidity for operation	25 % - 75 %

External unit installation

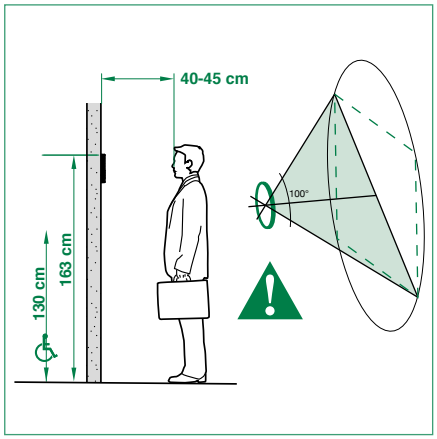

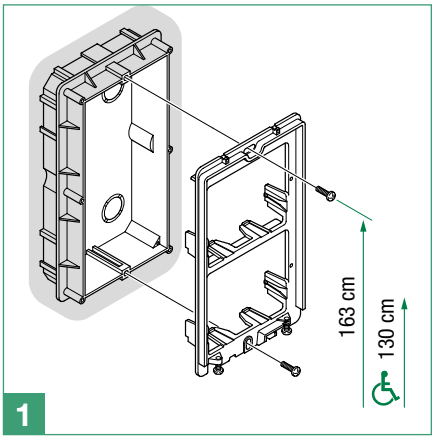

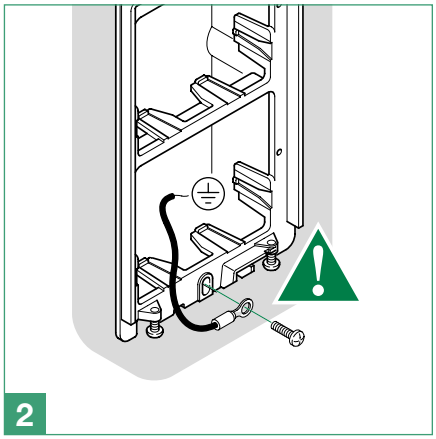

The camera must not be installed opposite bright light sources, or in places where the filmed subject is against the light.
In dim environments, we recommend additional lighting is provided.

Connect the module support frame to earth.

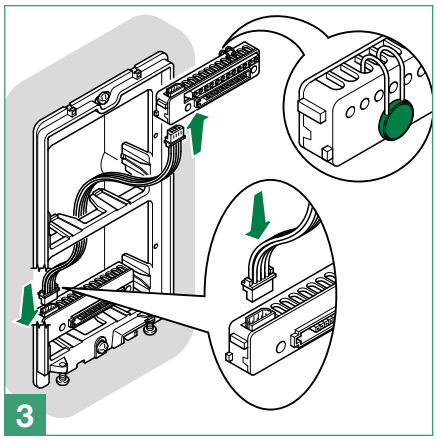

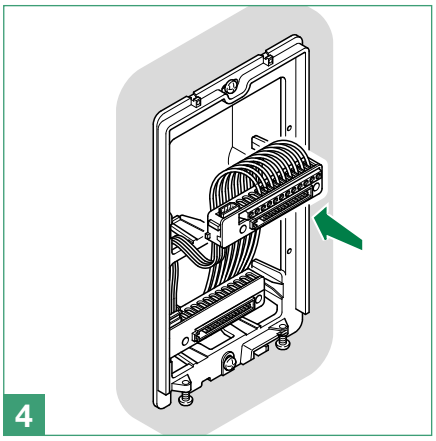

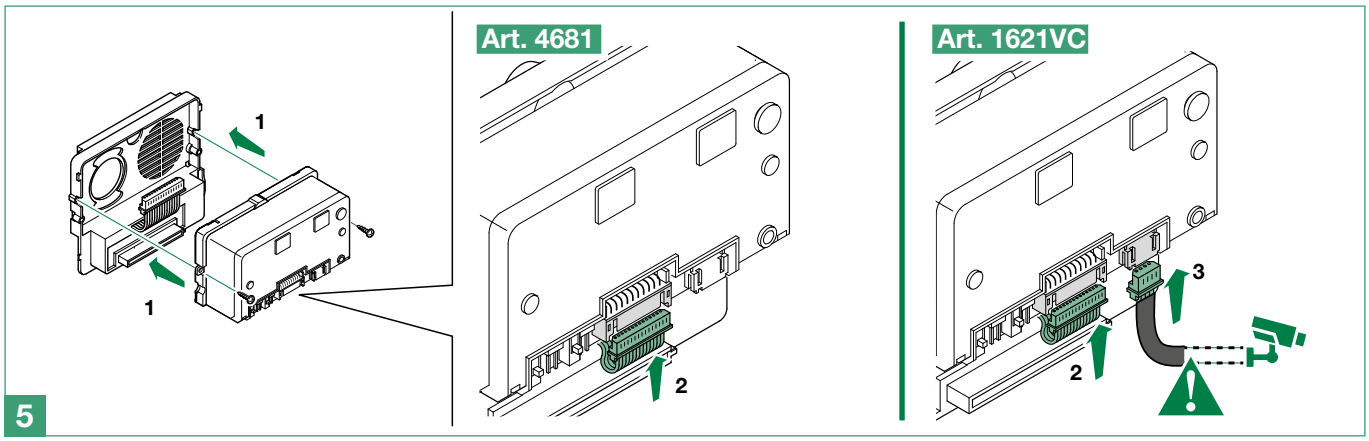

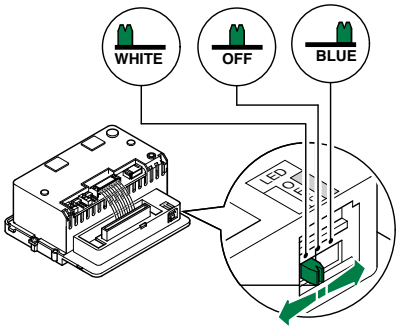

Nameplate LED lighting selection.

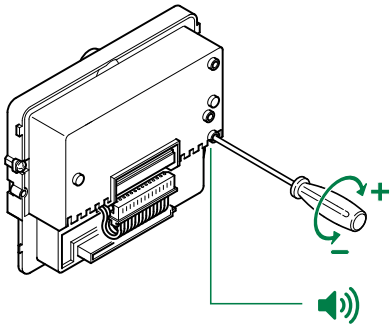

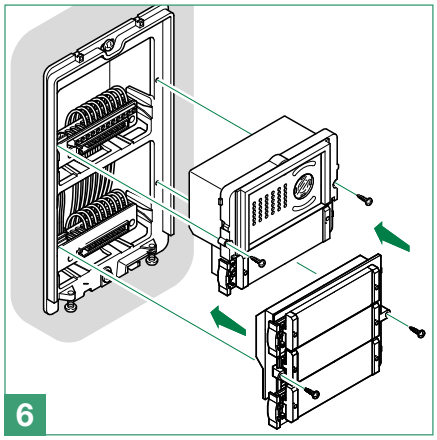

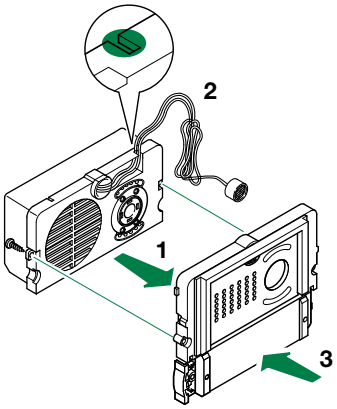

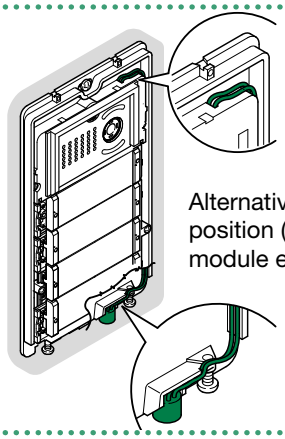

Alternative microphone position (excluding 4 module entrance panel)

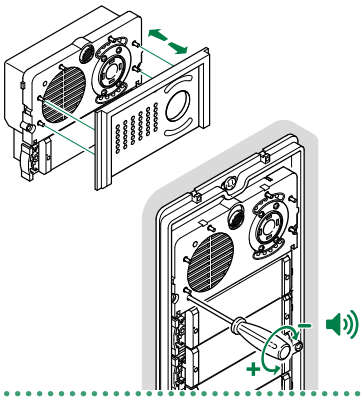

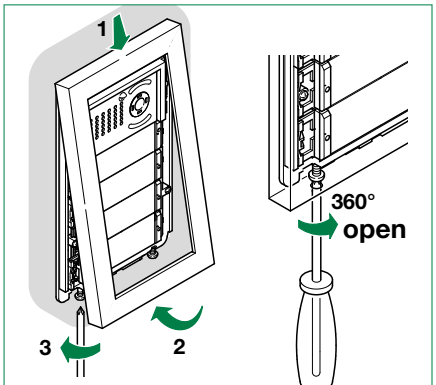

Connections

4681, 1621VC connections

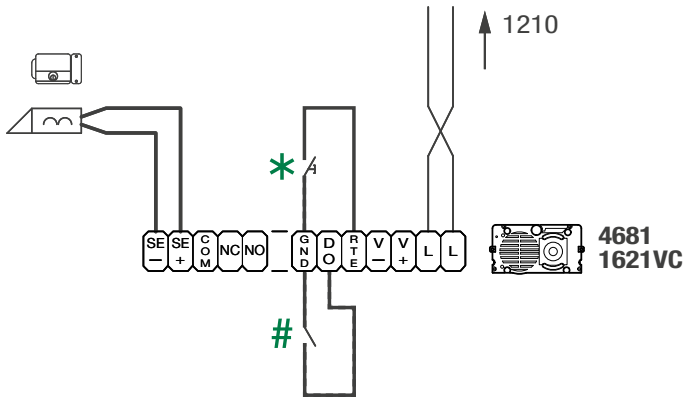

∗ Local lock-release button.

Active input closed for DOOR OPEN signal

4681, 1621VC connections with separate power supply

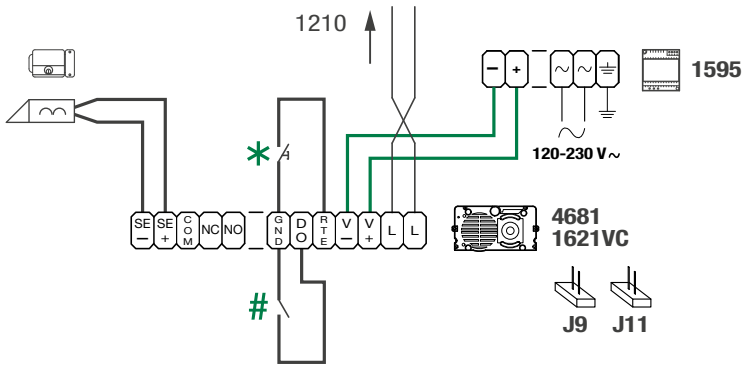

∗ Local lock-release button.

Active input closed for DOOR OPEN signal

Remote camera connection (Art. 1621VC only)

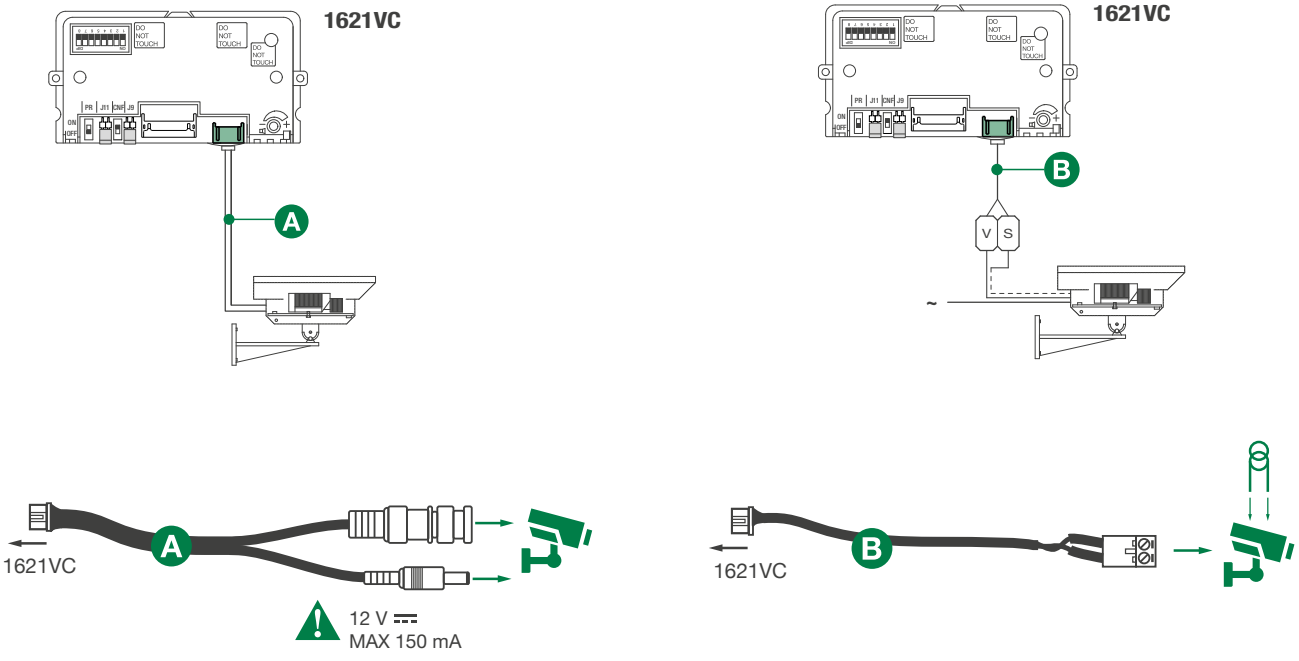

Variants

Variant for using the external unit relay

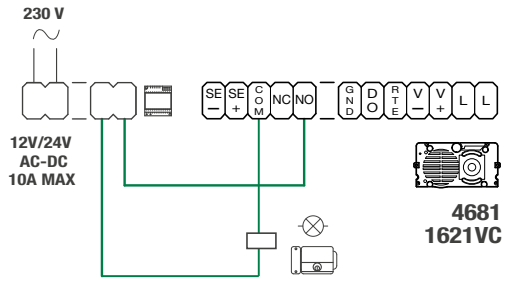

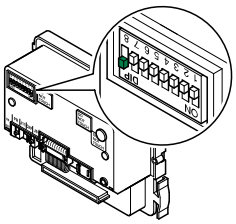

“C.NC.NO relay activation on actuator command: 2 sec”

Set dip switches in permanent mode as shown in figure (Dip switch 8 ON, Dip switches 1,2,3,4,5,6,7 OFF)

Variant for using a safety lock

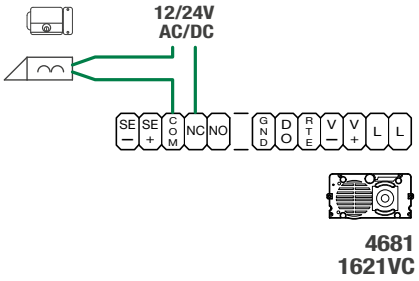

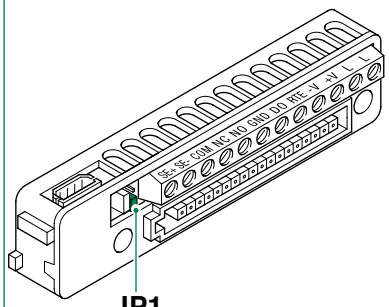

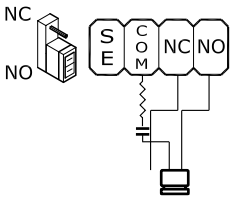

On C. NO contacts.

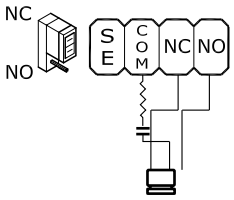

On C. NC contacts.

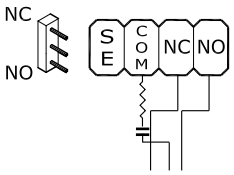

Excluded: voltage-free contact

Module connection

On systems with Art. 4681/1621VC and power supply unit Art. 1210, the maximum current available for the external unit modules is 100 mA.

Calculate the total power consumption of the modules in your system configuration using the Consumption table.

If the total power consumption exceeds 100 mA, connect a supplementary power supply unit (Art. 1595) to the V+ and V- contacts of the external unit, as shown in the figure below (see "4681, 1621VC connections with separate power supply"). In any case, the total absorption must be lower than 500 mA.

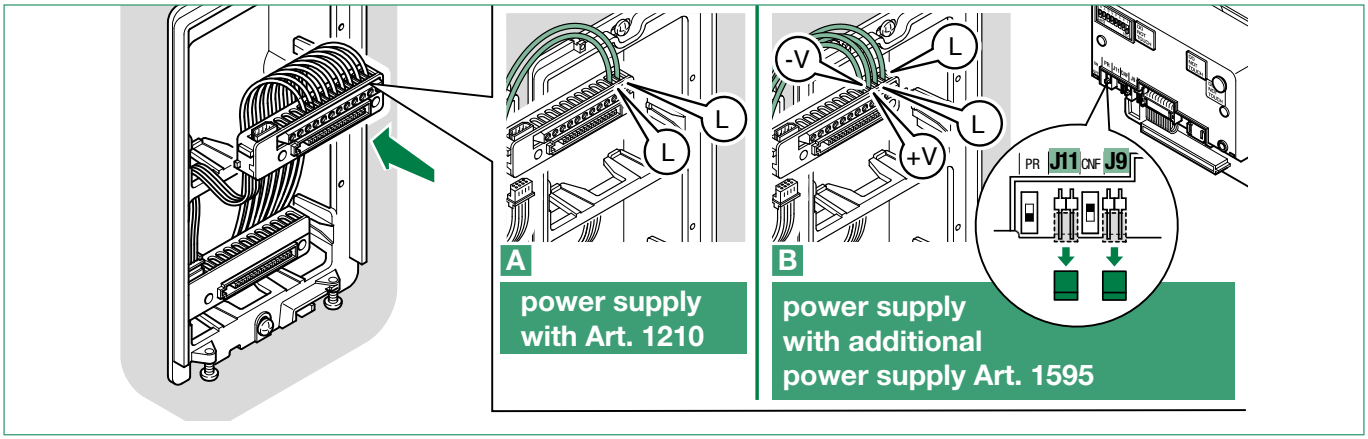

External unit module consumption table

Code		Consumption
Ikall and Ikall Metal modules		
33433 / 33434 / 33436 **33433M / 33434M / 33436M**		20mA
3336 / 3336M		20mA
3339M		20mA
3348B **3348BM**		30mA
	with 1 bistable relay active	60mA
	with 2 bistable relays active	80mA
3360B **3060BM**		45mA
3332 / 3332M		20mA
Vandalcom modules		
3262S/1/2 / 3268S/1/2 (con Art. 1172B)		8 mA
3064S (con Art. 1172B)		16 mA
3070S		only with 1595
3072S		only with 1595
Modules for Single-plate external unit		
3063D		8mA
1172B LED bulb		8mA
Simplekey modules		
SK9000I		50mA
SK9001I		50mA
ACM/R		60mA
ACM/500-2		60mA

Ikall / Ikall Metal modules

Connection of button modules 33433, 33434, 33436, 33433M, 33434M, 33436M

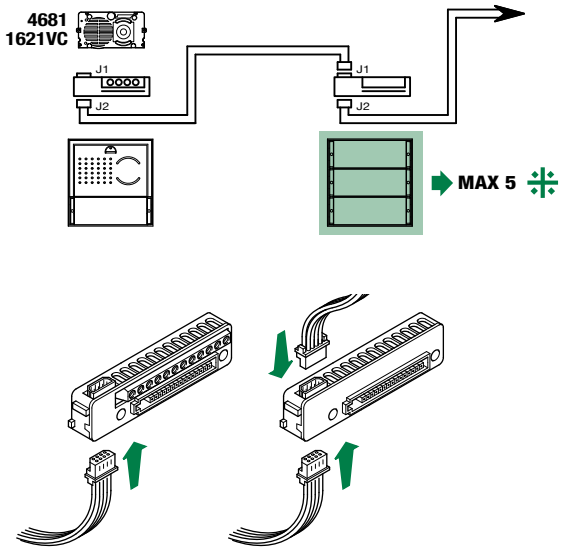

⁜ MAX 5 modules (MAX 17 modules with additional power supply)

Connection of Art. 3348B, 3348BM

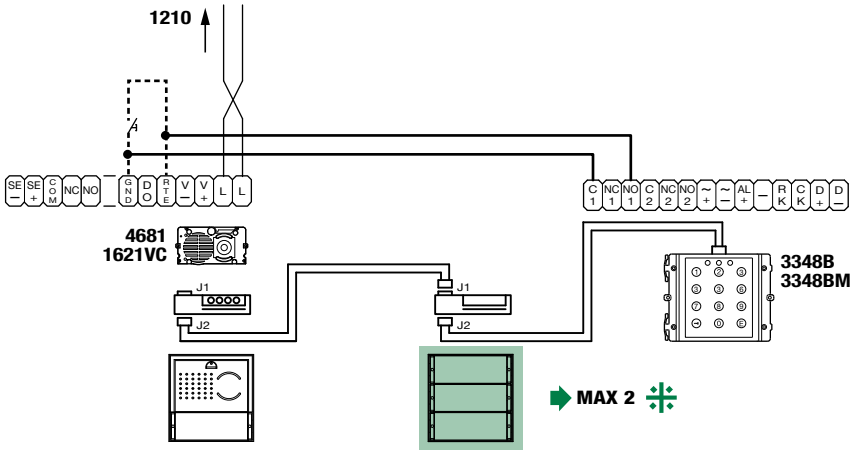

⁜ MAX 2 modules (MAX 17 modules with additional power supply)

Connection of Art. 3360B, 3360BM

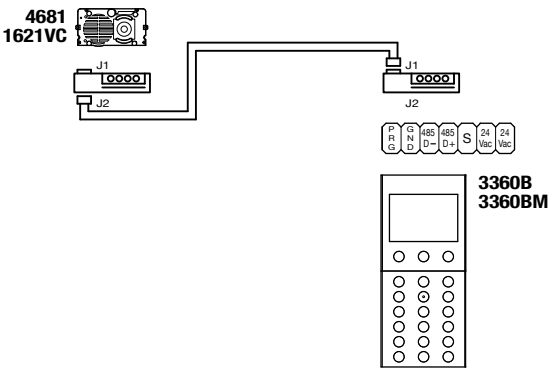

Vandalcom modules

Connection of Art. 3064S and Art. 1172B

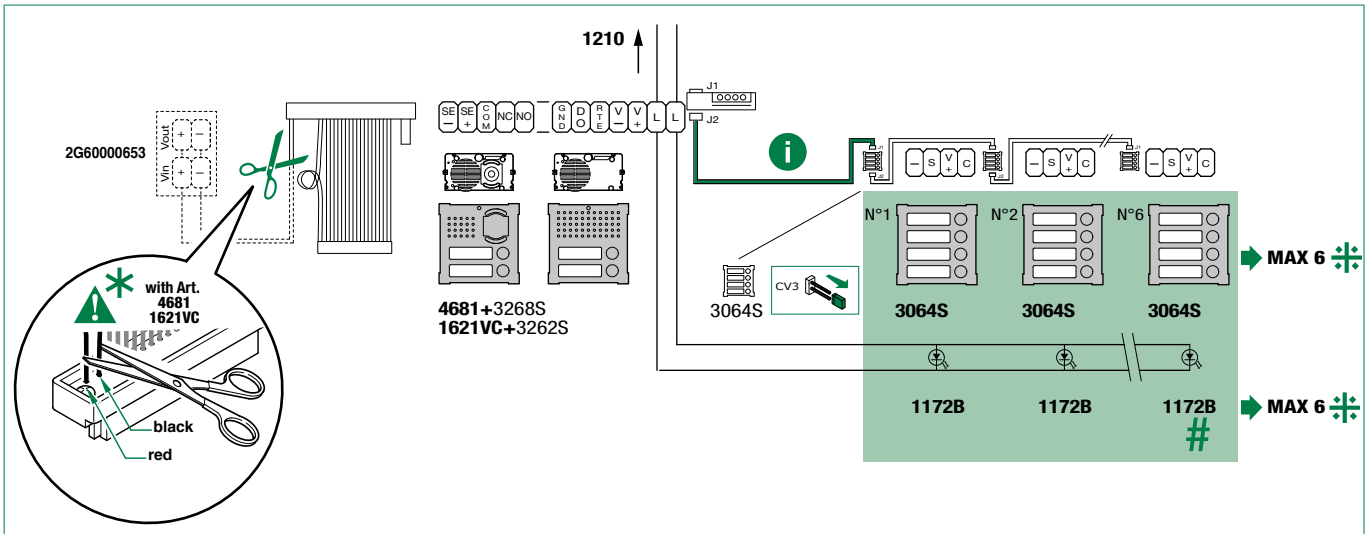

Use the cable supplied with Art. 3262S, 3268S

* Insulate the cables after cutting them

⁜ MAX 6 Art. 3064S plus up to 6 Art. 1172B

\# Use bulb Art. 1172B for nameplate lighting. The bulb is polarised.

Connection of Art. 3064S and Art. 1172B with additional power supply

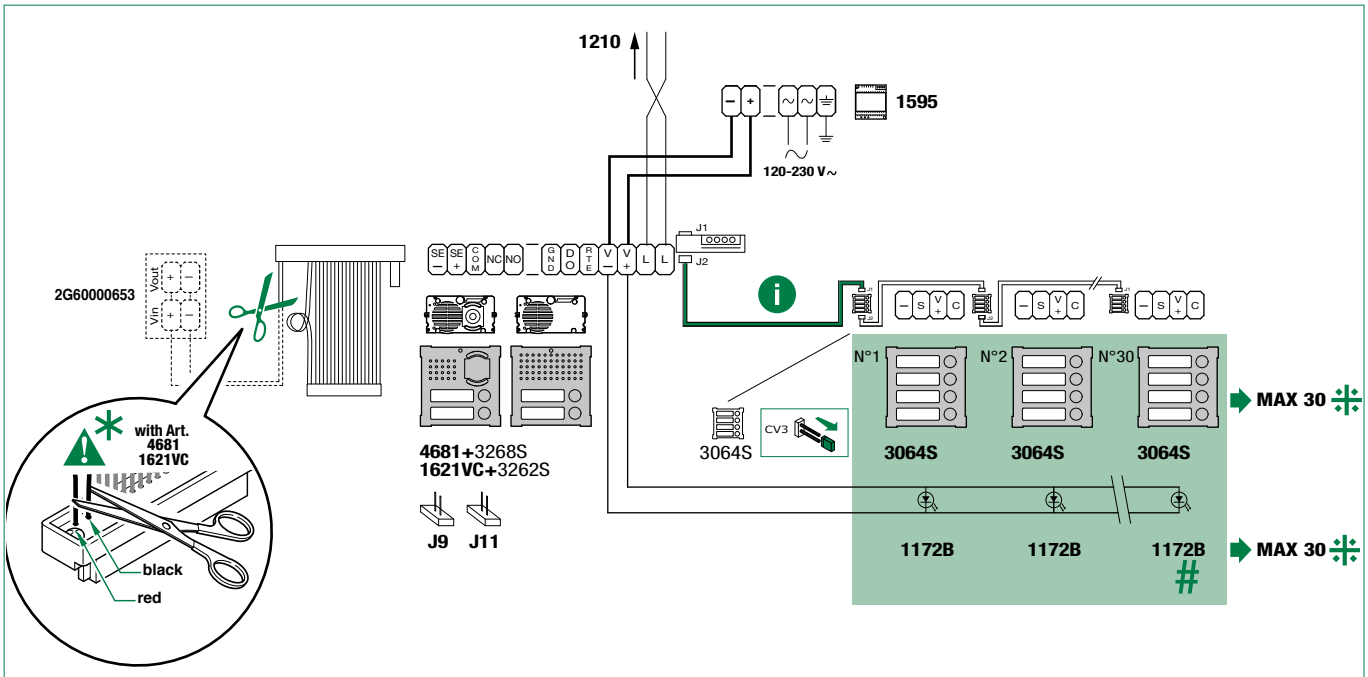

Use the cable supplied with Art. 3262S, 3268S

* Insulate the cables after cutting them

⁜ MAX 30 Art. 3064S plus up to 30 Art. 1172B

\# Use bulb Art. 1172B for nameplate lighting. The bulb is polarised.

Connection of Art. 3188A

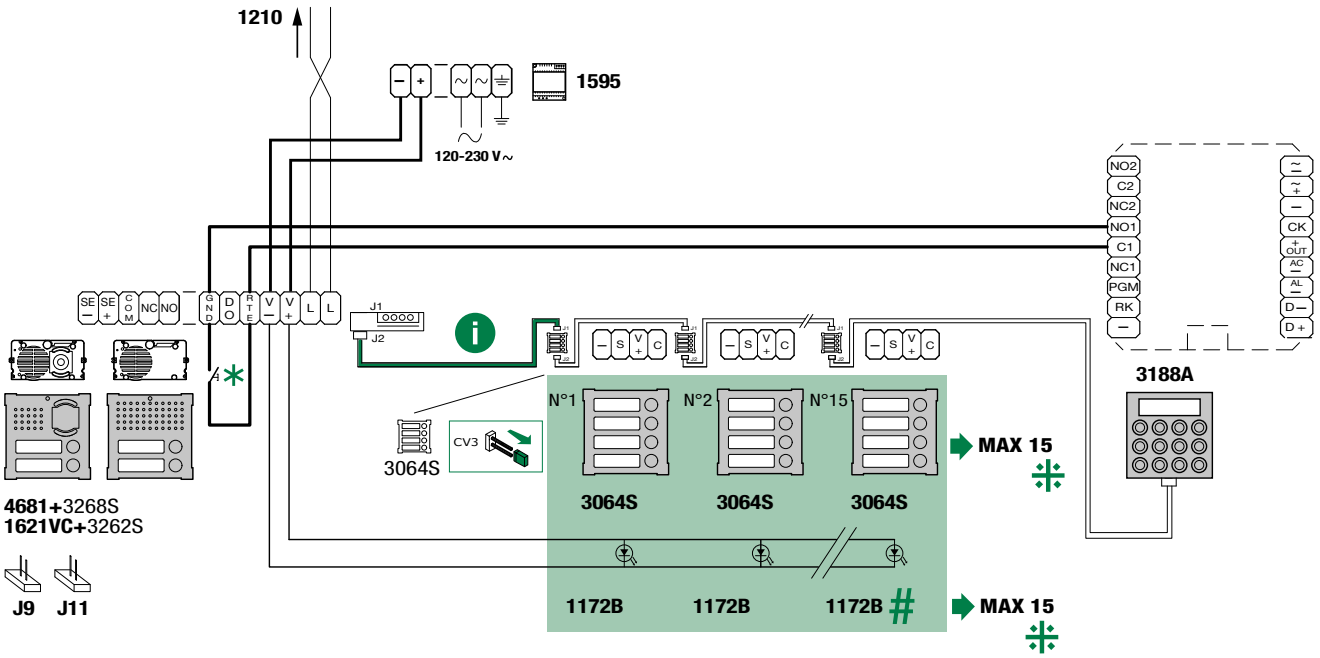

Use the cable supplied with Art. 3262S, Art. 3268S

Local lock-release button.

MAX 15.

Connection of Art. 3070S, 3072S

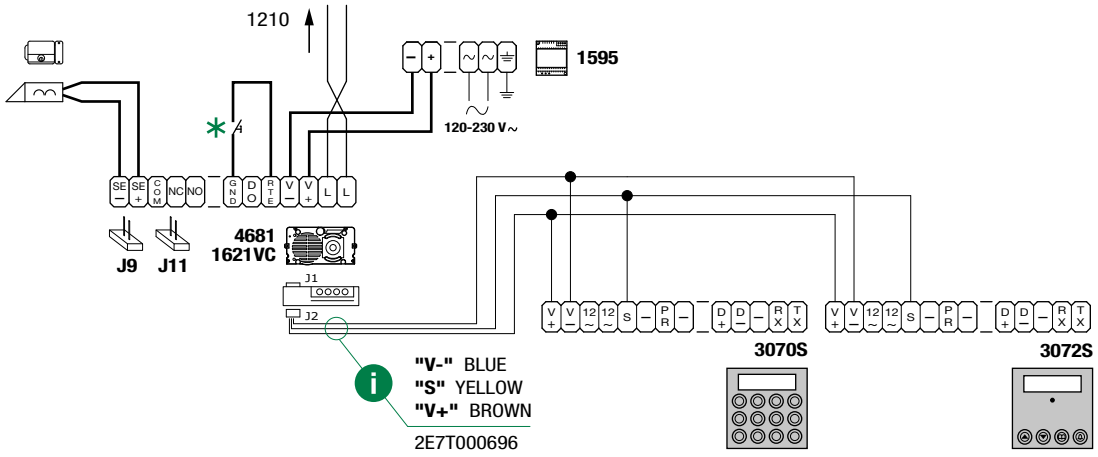

Use the cable 2E7T000696 supplied with Art. 3070S and Art. 3072S

Local lock-release button.

Modules for Single-plate external unit

Connection of Art. 3063D

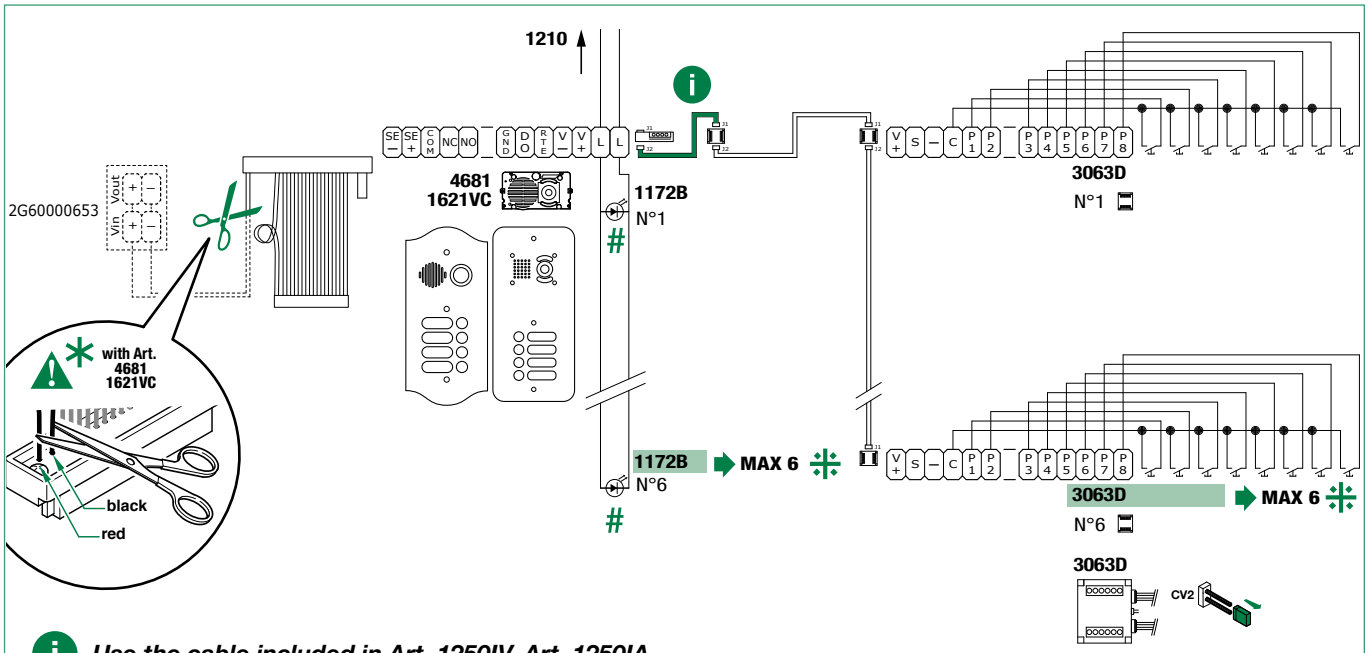

Use the cable included in Art. 1250IV, Art. 1250IA

- Insulate the cables after cutting them
- MAX 6 Art. 3063D plus up to 6 Art. 1172B
- Use bulb Art. 1172B for nameplate lighting. The bulb is polarised

Connection of Art. 3063D with additional power supply

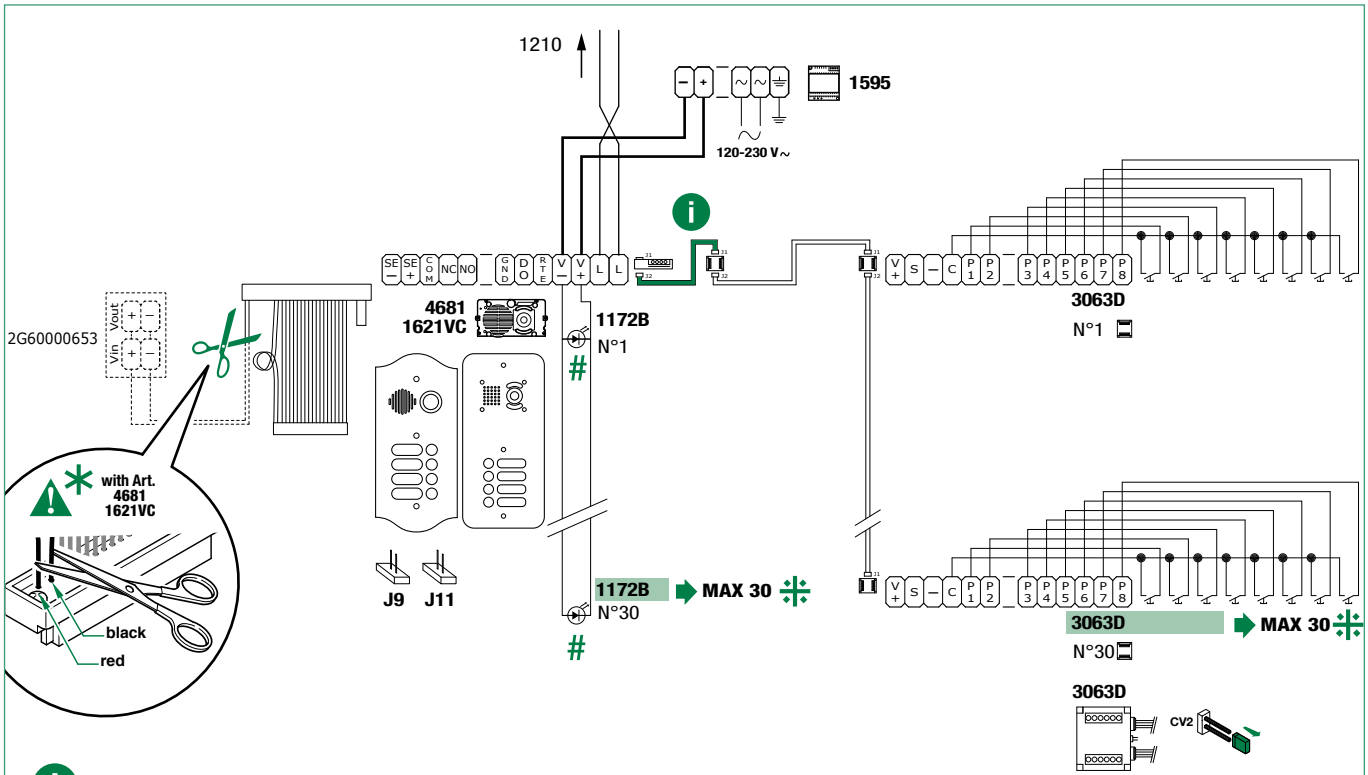

Use the cable included in Art. 1250IV, Art. 1250IA

- Insulate the cables after cutting them
- MAX 30 Art. 3063D plus up to 30 Art. 1172B.
- Use bulb Art. 1172B for nameplate lighting. The bulb is polarised.

Simplekey modules

Connection with Art. SK9015 for connection of readers Art. SK9000I and Art. SK9001I

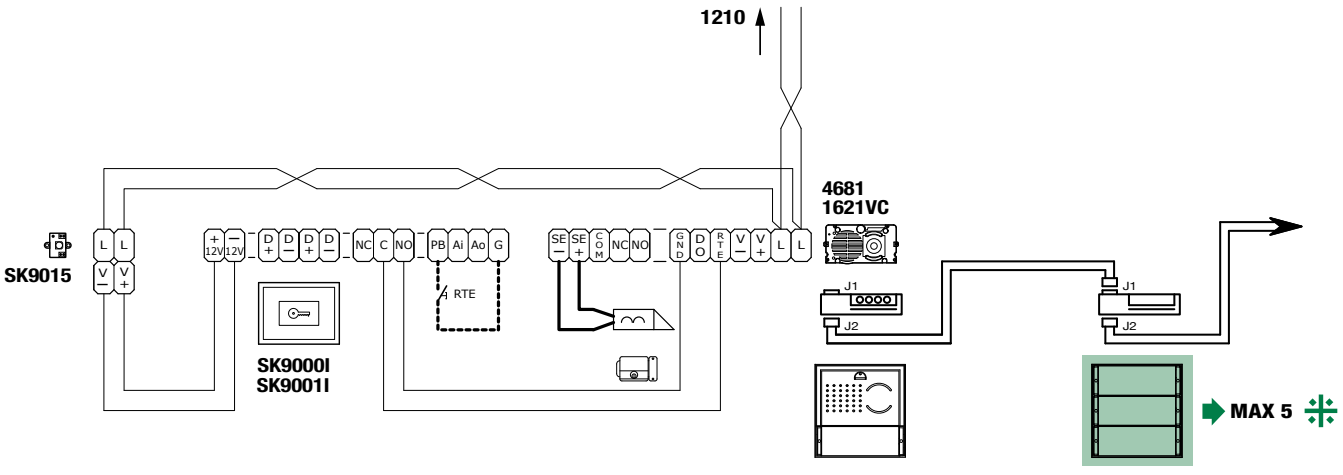

❊ MAX 5 modules

Button programming

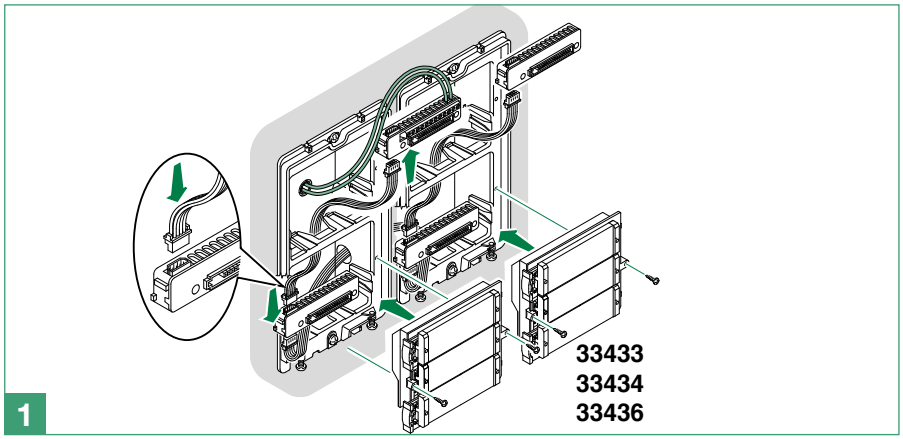

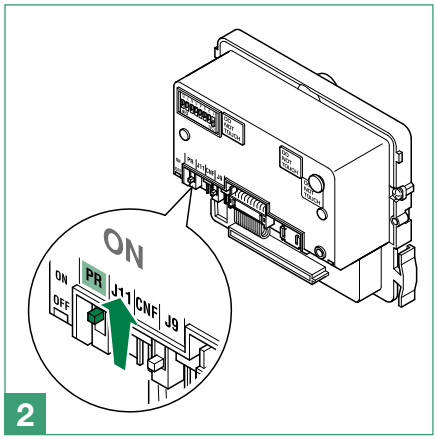

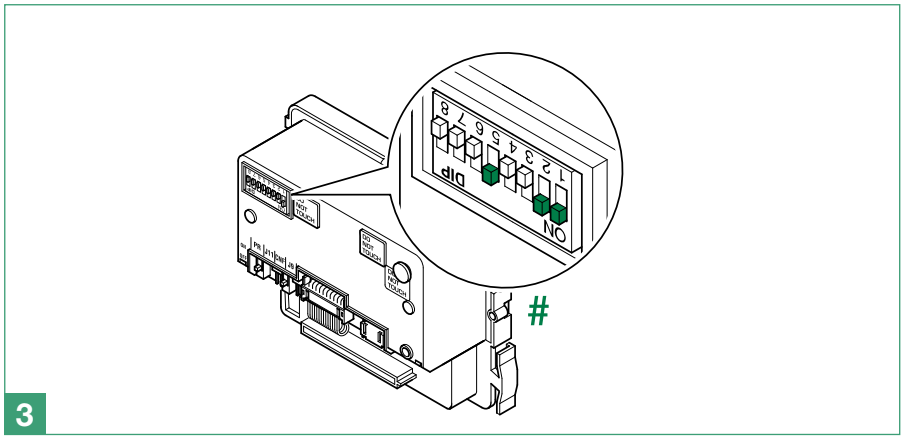

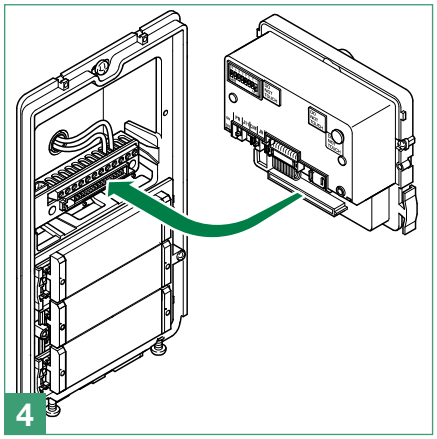

Set the user code using the dip switches; see “addressing table”.

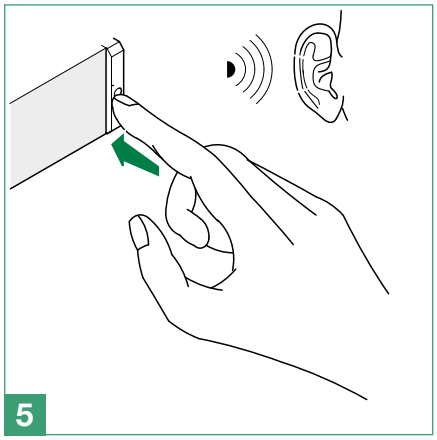

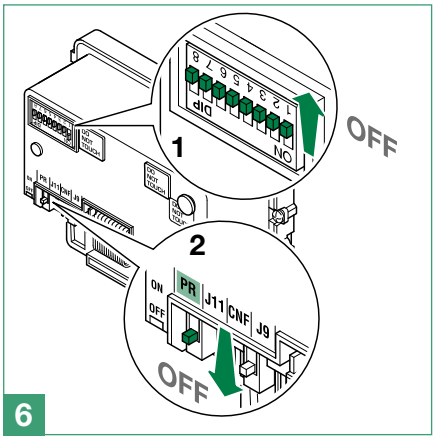

Special programmes

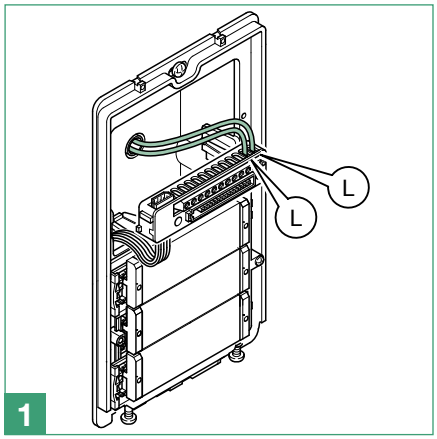

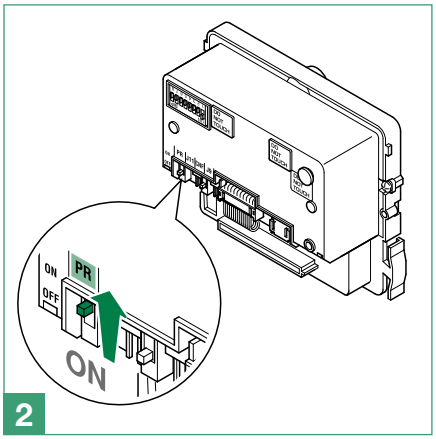

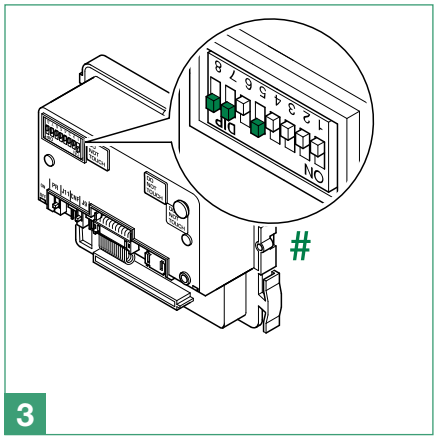

Set the dip switches for the function you wish to program, see the table

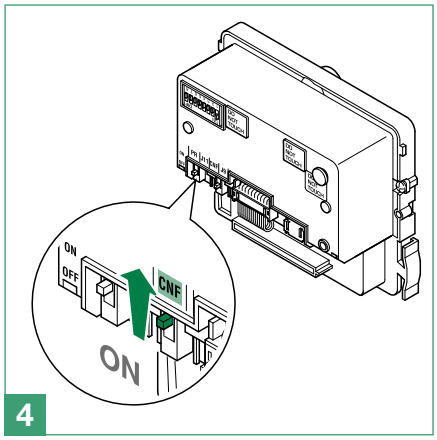

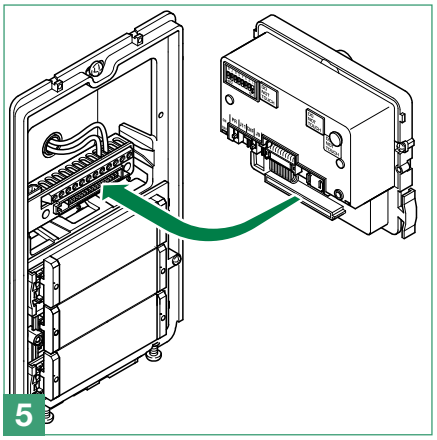

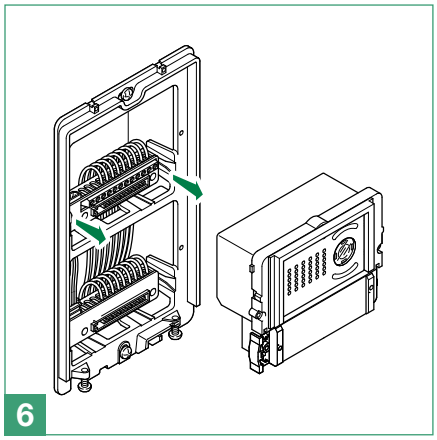

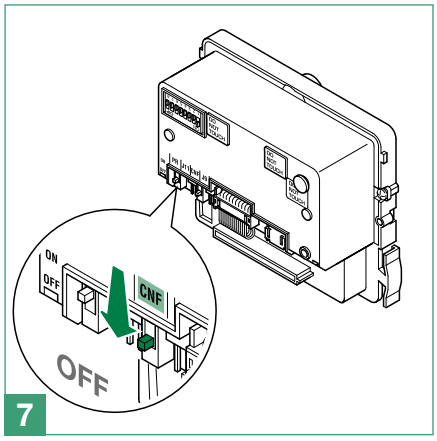

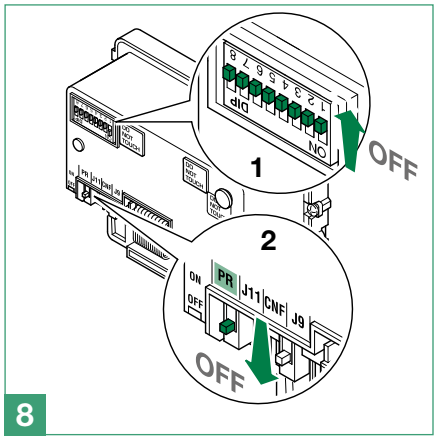

CODE	DIP SWITCHES ON	FUNCTIONS
		De-misting heating element
213	1,3,5,7,8	OFF (default)
212	3,5,7,8	ON
		Audio-visual messages
195	1,2,7,8	Hebrew
196	3,7,8	Polish
197	1,3,7,8	Catalan
198	2,3,7,8	Galician
199	1,2,3,7,8	Basque
206	2,3,4,7,8	Danish
207	1,2,3,4,7.8	Norwegian
211	1,2,5,7,8	Swedish
215	1,2,3,5,7.8	Italian
216	4,5,7,8	French
217	1,4,5,7,8	Spanish
218	2,4,5,7,8	Dutch
219	1,2,4,5,7.8	Greek
220	3,4,5,7,8	English
221	1,3,4,5,7.8	German
222	2,3,4,5,7.8	Portuguese
202	2,4,7,8	Enables voice message (door opened warning) when the RTE contact is closed
203	1,2,4,7,8	Disables voice message (door opened warning) when the RTE contact is closed (default setting)
208	5,7,8	Enables “awaiting reset time" on lock-release command
209	1,5,7,8	Disables “awaiting reset time" on lock-release command (awaiting response time or talk time will be activated)
210	2,5,7,8	Visual messages only
214	2,3,5,7,8	OFF (default)
		Actuator command management **N.B. Art. 1256 in generic actuator mode must not be present in the system.**
227	1,2,6,7,8	Actuator function on S serial line = enabled
228	3,6,7,8	Actuator function on S serial line = disabled (default)
229	1,3,6,7,8	C.NC.NO relay activation on actuator command: 2 sec
230	2,3,6,7,8	C.NC.NO relay activation on actuator command: 4 sec
231	1,2,3,6,7.8	C.NC.NO relay activation on actuator command: 8 sec
		Door lock
245	1,3,5,6,7.8	Door lock time: 2 sec + disabling tone (default)
246	2,3,5,6,7.8	Door lock time: 4 sec
247	1,2,3,5,6,7,8	Door lock time: 8 sec
248	4,5,6,7,8	Door lock confirmation tone: enabled
251	1,2,4,5,6,7,8	Relay C.NC.NO in parallel to SE (default)
252	3,4,5,6,7.8	Lock-release always enabled (default)
253	1,3,4,5,6,7,8	Lock-release only enabled for user called
		System functions
232	4,6,7,8	Awaiting response time: 60 sec (default)
233	1,4,6,7,8	Awaiting response time: 120 sec

234	2,4,6,7,8	Awaiting response time: 30 sec
235	1,2,4,6,7.8	Talk time: 90 sec. (default)
236	3,4,6,7,8	Talk time: 180 sec
237	1,3,4,6,7.8	Self-ignition: enabled (default)
238	2,3,4,6,7.8	Self-ignition: disabled
239	1,2,3,4,6,7,8	Confirmation tone on user call = enabled (default)
240	5,6,7,8	Confirmation tone on user call = disabled
243	1,2,5,6,7.8	Awaiting reset time: 10 sec (default)
244	3,5,6,7,8	Awaiting reset time: 1 sec
208	5,7,8	Reset after lock-release in audio: enabled (default)
209	1,5,7,8	Reset after lock-release in audio: disabled
249	1,4,5,6,7.8	Call transmission: single (default)
250	2,4,5,6,7.8	Call transmission: triple
		System mode
0		Simplebus (default)
255	1,2,3,4,5,6,7.8	Simplebus Top (NO Art. 4681/4)
254	2,3,4,5,6,7,8	**Restore default**

Installation information

- The module Art. 4681 / Art. 1621VC operates by default as a main external unit (timed busy signal). To set it as a secondary external unit (busy signal active for the whole time the riser is in use), set all the selector DIP switches to ON.
- When a call is transmitted from the external unit, if a busy tone is heard instead of the ringtone, this means communication with another external unit is in progress.

System performance and layouts

For further information of system performance and to view installation layouts, click on the type of system that best meets your needs:

- **Building Kit audio/video system** for the creation of audio-video systems for *small apartment blocks*

Table of contents

Warning

Description **167**
Art. 1621 - Compatibility table 167

Technical specifications **169**

External unit installation **170**

Connections **171**
Connections 1621 ..... **171**
1621 connections with separate power supply **171**
Variants **171**

Module connection **172**
External unit module consumption table **172**
Ikall / Ikall Metal modules **173**
Connection of button modules 33433, 33434, 33436, 33433M, 33434M, 33436M 173
Connection of Art. 3348B, 3348BM 173
Connection of Art. 3360B, 3360BM 173
Vandalcom modules **174**
Connection of Art. 3064S and Art. 1172B 174
Connection of Art. 3064S and Art. 1172B with additional power supply 174
Connection of Art. 3188A 175
Connection of Art. 3070S, 3072S 175
Modules for Single-plate external unit **176**
Connection of Art. 3063D 176
Connection of Art. 3063D with additional power supply 176
Simplekey modules **177**
Connection with Art. SK9015 for connection of readers Art. SK9000I and Art. SK9001I 177

Button programming **178**

Special programmes **179**
Installation information **181**

System performance and layouts **181**

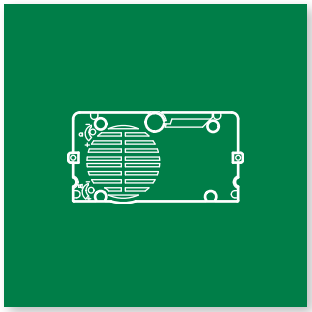

Audio module for 2-wire system
Art. 1621

Description

*Article **1621** is an audio module which is compatible with Comelit "Building Kit" (exclusively 2-wire) entry phone systems, exclusively for use in conjunction with riser power supply unit Art. 1210.*

It can be installed in Ikall, Ikall Metal, Vandalcom, Roma and "N" Series external units and can be finished with additional modules to meet all system requirements.

Art. 1621 - Compatibility table					
Ikall		***Ikall Metal***	***Vandalcom***	***Roma***	***Serie "N"***
 33400		 33400M	 3262S/0	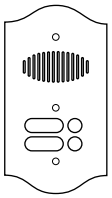 30xx/RI	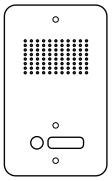 30xxNA
 33401	 33401A	 33401M	 3262S/1		
 33402	 33402A	 33402M	 3262S/2		

To make use of the indicator LEDs (busy, call sent, door opened, communication active), **faceplates from kit 33400K are available to purchase separately for the IKALL series.**

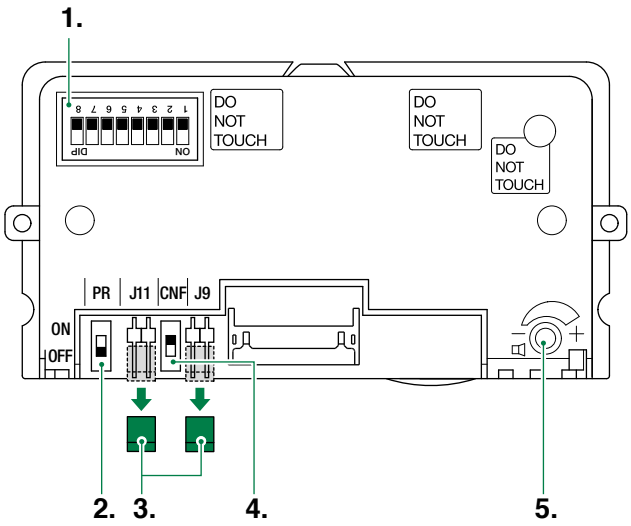

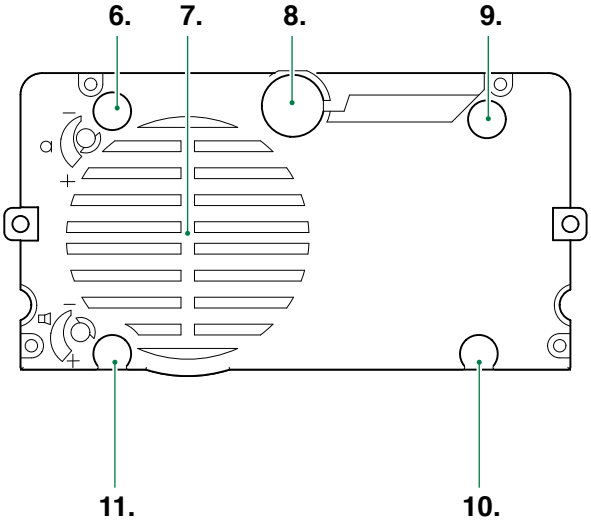

1. **S1** DIP switches for function programming and setting the user code.
2. **PR** switch for input/output programming.
3. **J11 and J9** jumper for power supply management. Remove both in the case of a separate power supply.
4. **CNF** switch for confirming special programmes.
5. Loudspeaker volume control.
6. Indicator LED: call sent.
7. Speaker.
8. Microphone.
9. Indicator LED: system busy.
10. Indicator LED: sound activated.
11. Indicator LED: lock-release activated.

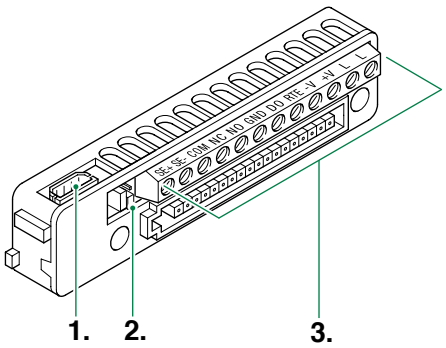

1. 8-pole cable connector.

2. **JP1** RC network management for door lock filter on relay contacts (see **“Variant for using the external unit relay / Variant for using a safety lock“**).

3. Terminal block for connection:

SE+ SE-	electric lock connection
COM	common relay contact
NC	normally closed relay contact
NO	normally open relay contact
GND	input reference negative for DO-RTE
DO	door opened signal input
RTE	local lock-release input
V-	power supply negative
V+	power supply positive
LL	bus line connection

Technical specifications

MAIN SPECIFICATIONS	
Simplebus Top system	No
Compatible with the Building Kit System	Yes
Vip system	No
Audio system	Yes
Audio/video system	Yes
Power supply voltage	33 - 35 Vdc
Absorption in standby (mA)	50 - 53 mA
Absorption during call (mA)	60 -68 mA
Absorption during communication (mA)	85 -90 mA
Clamps	L L V+ V- RTE DO GND SE- SE+ COM NC NO
Microphone	Yes
Microphone volume control	No
Loudspeaker	Yes
Loudspeaker volume control	Yes
Relative humidity for operation	25 % - 75 %

External unit installation

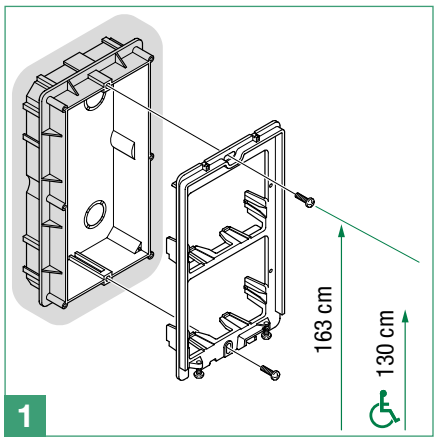

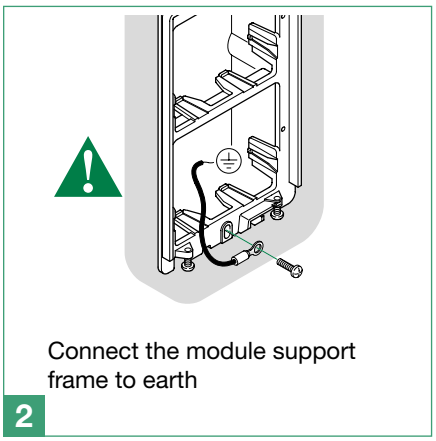

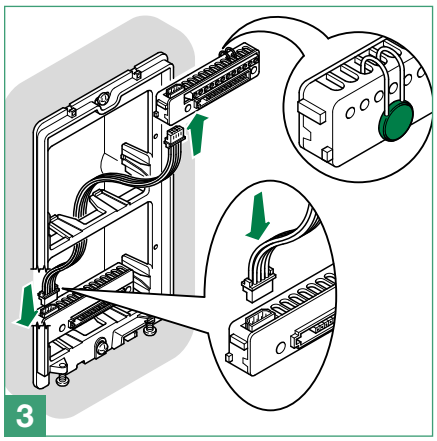

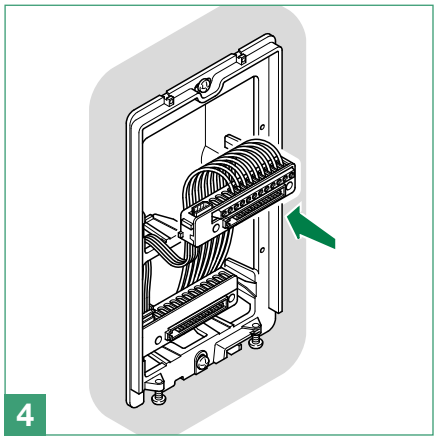

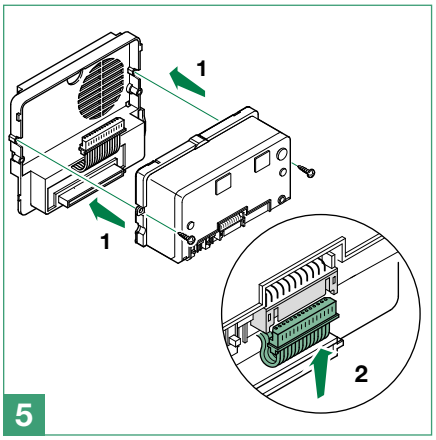

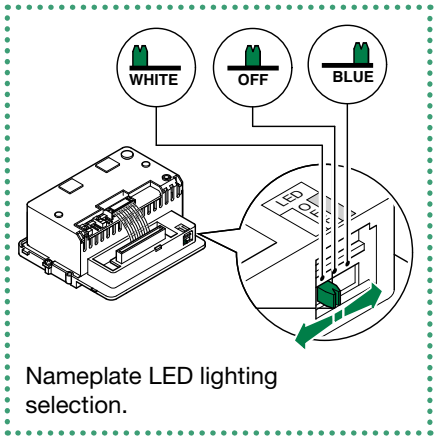

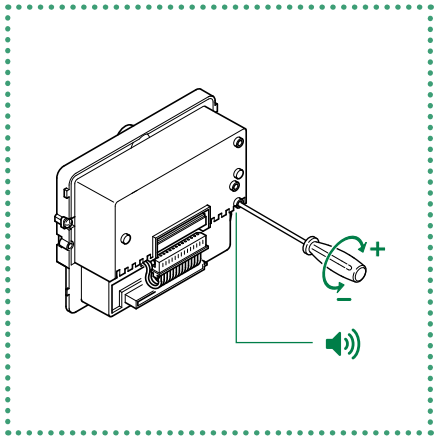

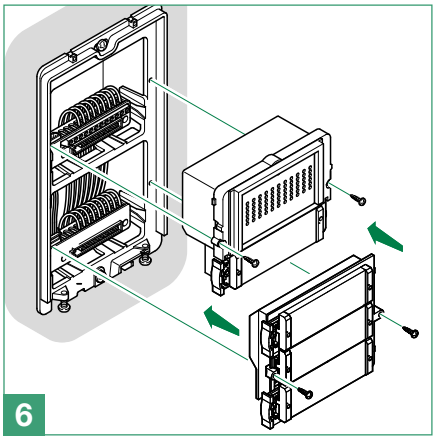

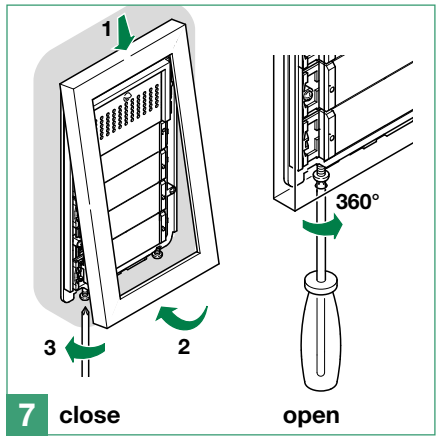

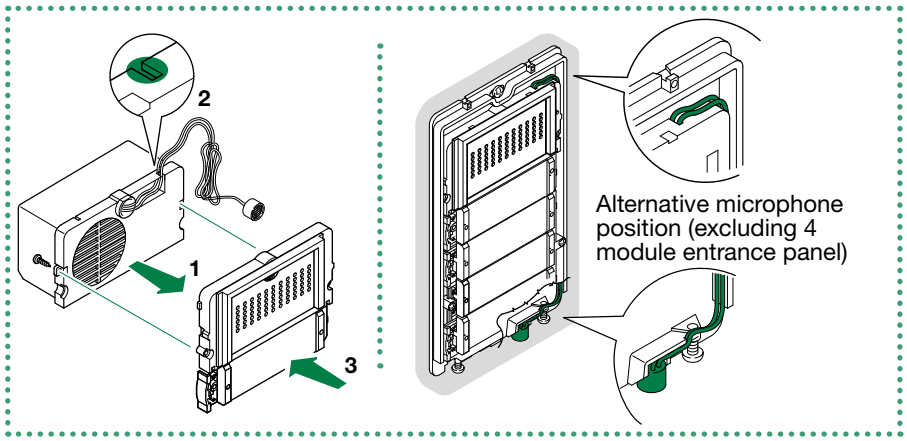

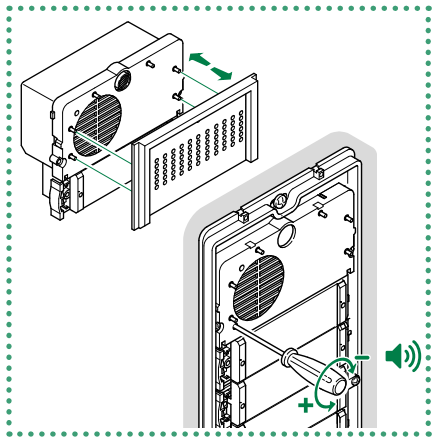

Connections

Connections 1621

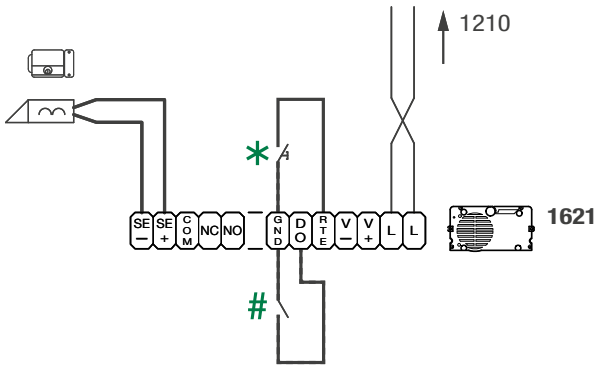

* Local lock-release button.
# Active input closed for DOOR OPEN signal

1621 connections with separate power supply

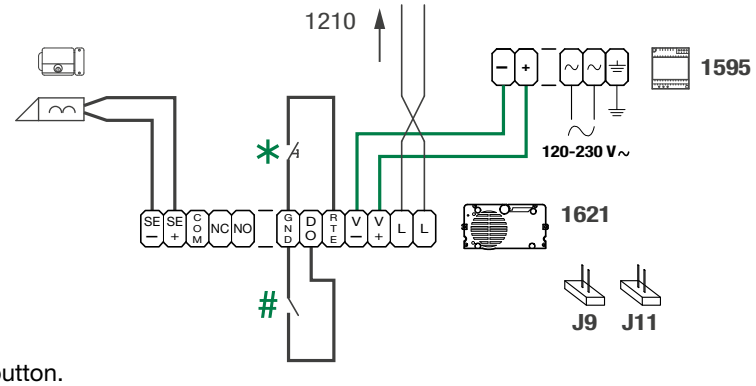

* Local lock-release button.
# Active input closed for DOOR OPEN signal

Variants

Variant for using the external unit relay

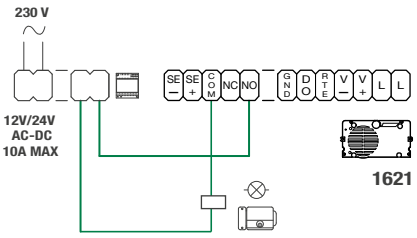

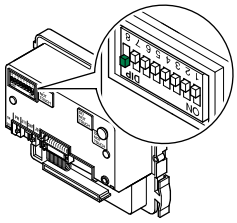

"C.NC.NO relay activation on actuator command: 2 sec"
Set dip switches in permanent mode as shown in figure

Variant for using a safety lock

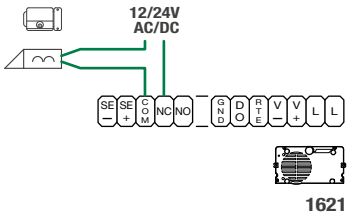

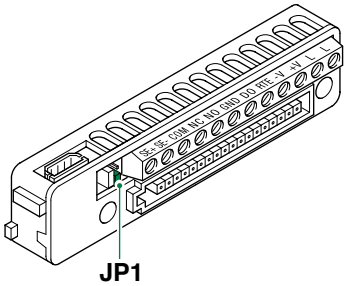

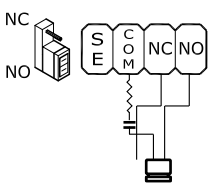

On C. NO contacts.

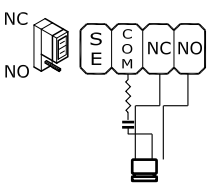

On C. NC contacts.

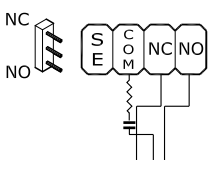

Excluded: voltage-free contact

Module connection

On systems with Art. 1621 and power supply unit Art. 1210, the maximum current available for the external unit modules is 100 mA.
Calculate the total power consumption of the modules in your system configuration using the Consumption table.
If the total power consumption exceeds 100 mA, connect a supplementary power supply unit (Art. 1595) to the V+ and V- contacts of the external unit, as shown in the figure below (see "1621 connections with separate power supply"). In any case, the total absorption must be lower than 500 mA.

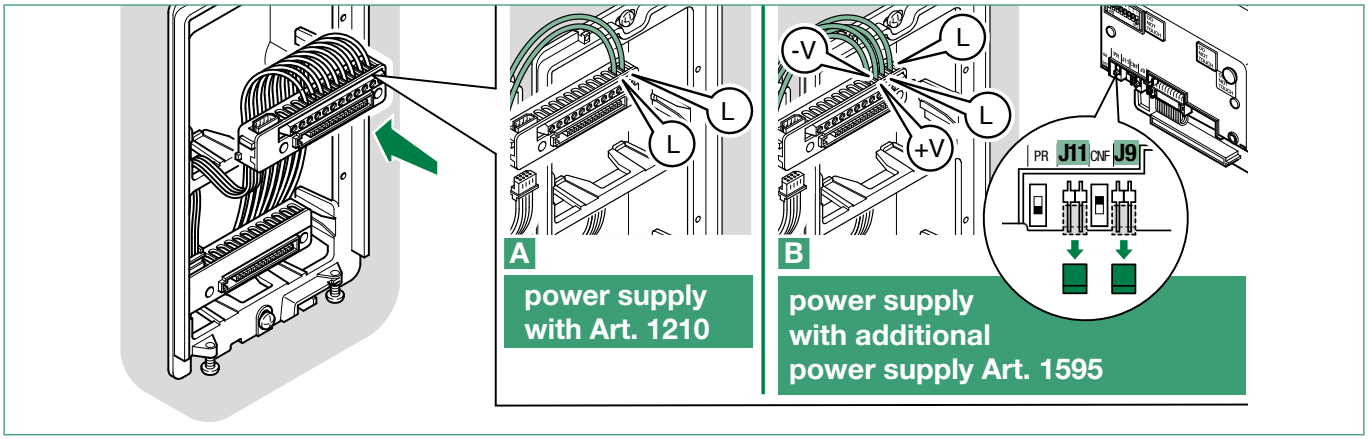

External unit module consumption table

Code		Consumption
Ikall and Ikall Metal modules		
33433 / 33434 / 33436 **33433M / 33434M / 33436M**		20mA
3336 / 3336M		20mA
3339M		20mA
3348B **3348BM**		30mA
	with 1 bistable relay active	60mA
	with 2 bistable relays active	80mA
3360B **3060BM**		45mA
3332 / 3332M		20mA
Vandalcom modules		
3262S/1/2 (with Art.1172B)		8 mA
3064S (with Art.1172B)		16 mA
3070S		only with 1595
3072S		only with 1595
Modules for Single-plate external unit		
3063D		8mA
1172B LED bulb		8mA
Simplekey modules		
SK9000I		50mA
SK9001I		50mA
ACM/R		60mA
ACM/500-2		60mA

Ikall / Ikall Metal modules

Connection of button modules 33433, 33434, 33436, 33433M, 33434M, 33436M

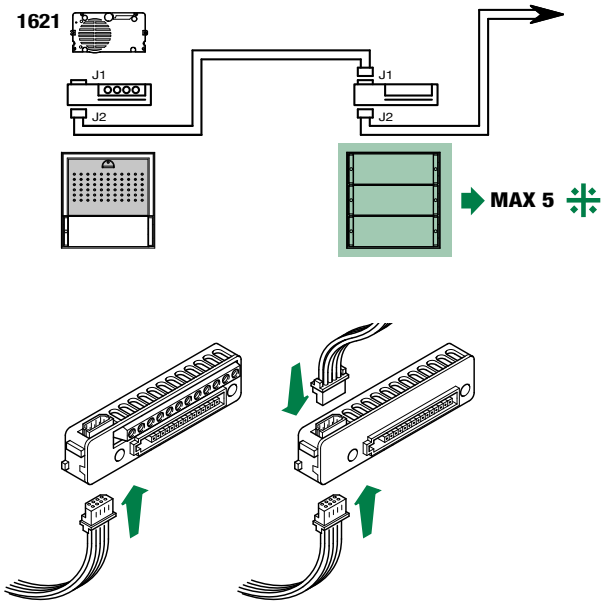

⁜ MAX 5 modules (MAX 17 modules with additional power supply).

Connection of Art. 3348B, 3348BM

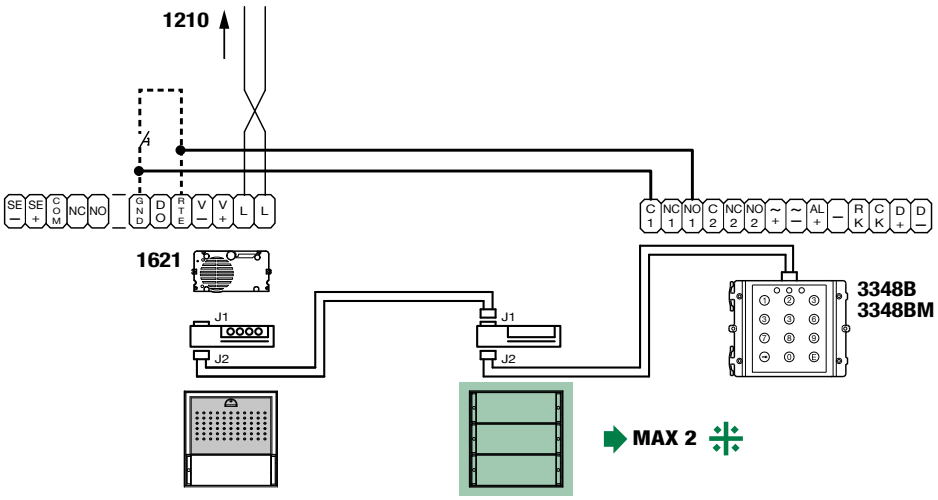

⁜ MAX 2 modules (MAX 17 modules with additional power supply)

Connection of Art. 3360B, 3360BM

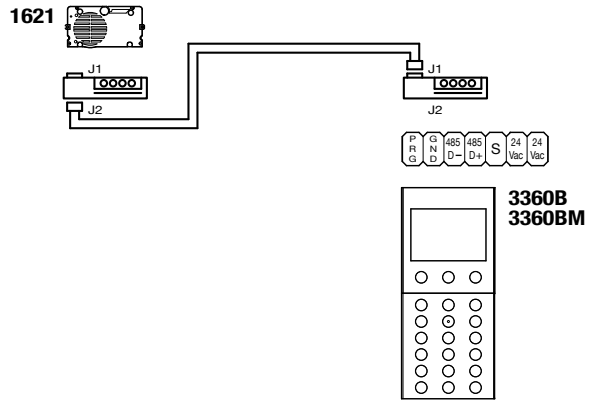

Vandalcom modules

Connection of Art. 3064S and Art. 1172B

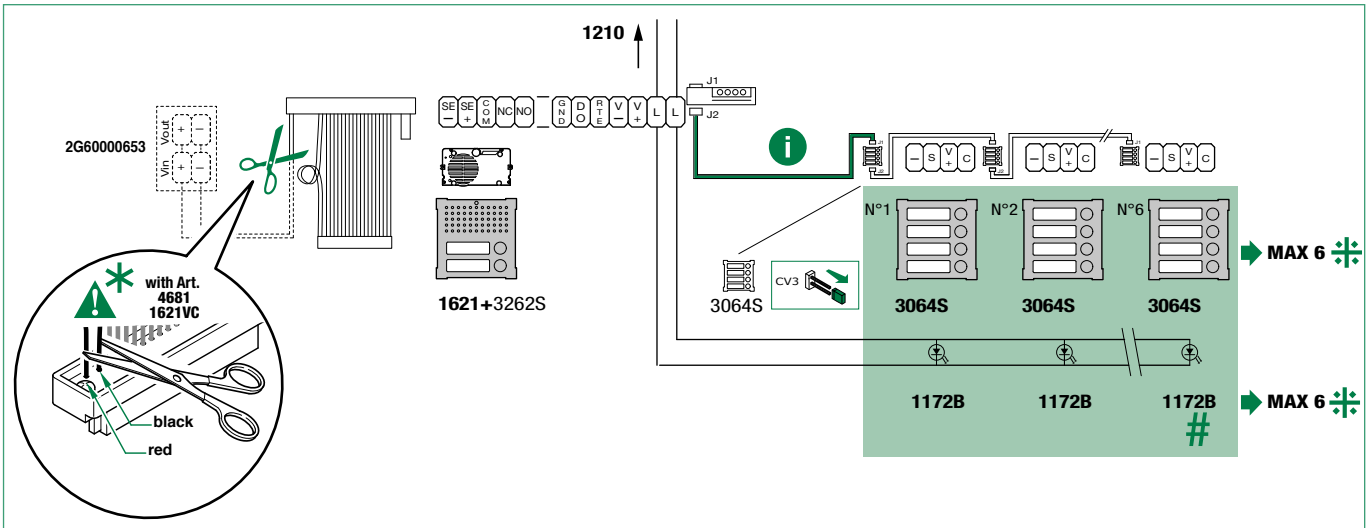

Use the cable supplied with Art. 3262S.

* Insulate the cables after cutting them

⁜ MAX 6 Art. 3064S plus up to 6 Art. 1172B

\# Use bulb Art. 1172B for nameplate lighting. The bulb is polarised.

Connection of Art. 3064S and Art. 1172B with additional power supply

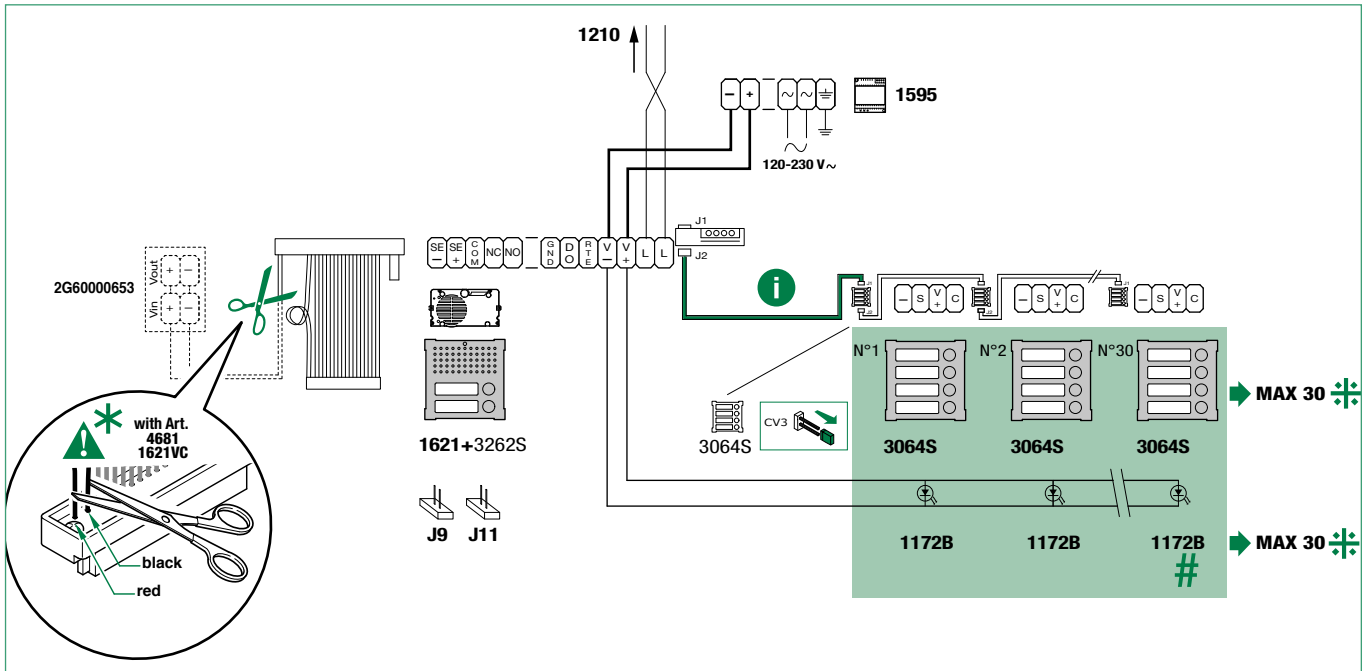

Use the cable supplied with Art. 3262S

* Insulate the cables after cutting them

⁜ MAX 30 Art. 3064S plus up to 30 Art. 1172B.

\# Use bulb Art. 1172B for nameplate lighting. The bulb is polarised.

Connection of Art. 3188A

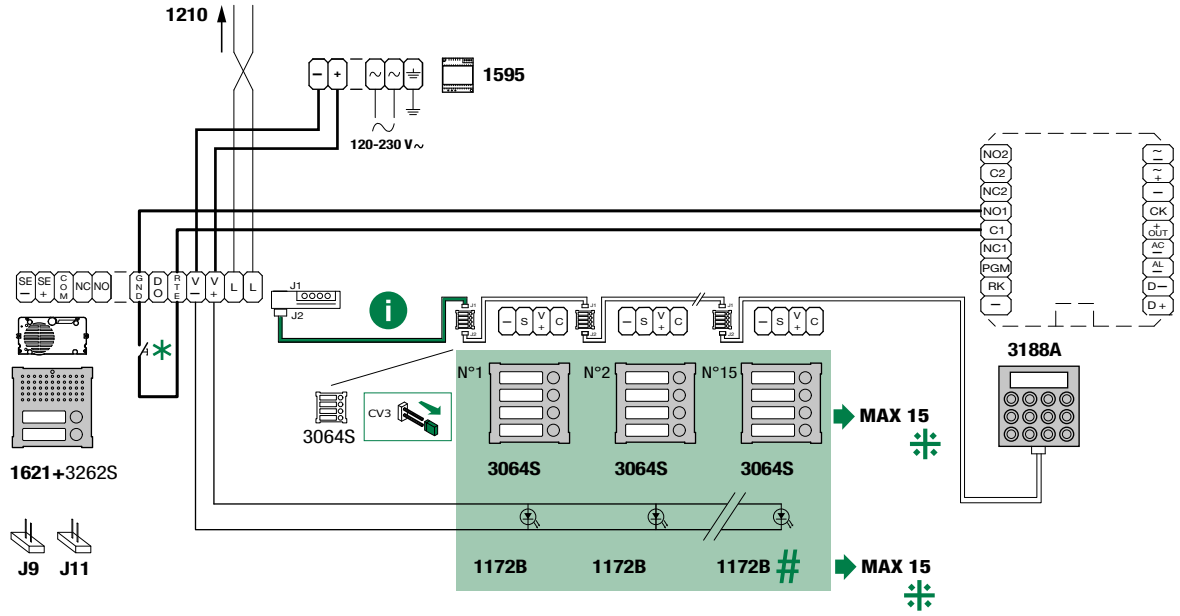

Use the cable supplied with Art. 3262S

✳ Local lock-release button.

⁜ MAX 15

Connection of Art. 3070S, 3072S

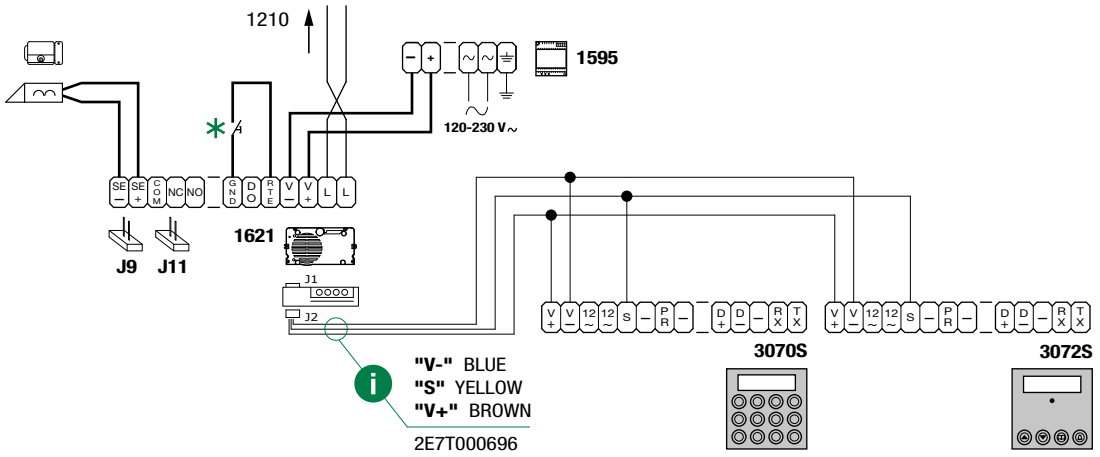

Use the cable 2E7T000696 supplied with Art. 3070S and Art. 3072S

✳ Local lock-release button.

Modules for Single-plate external unit

Connection of Art. 3063D

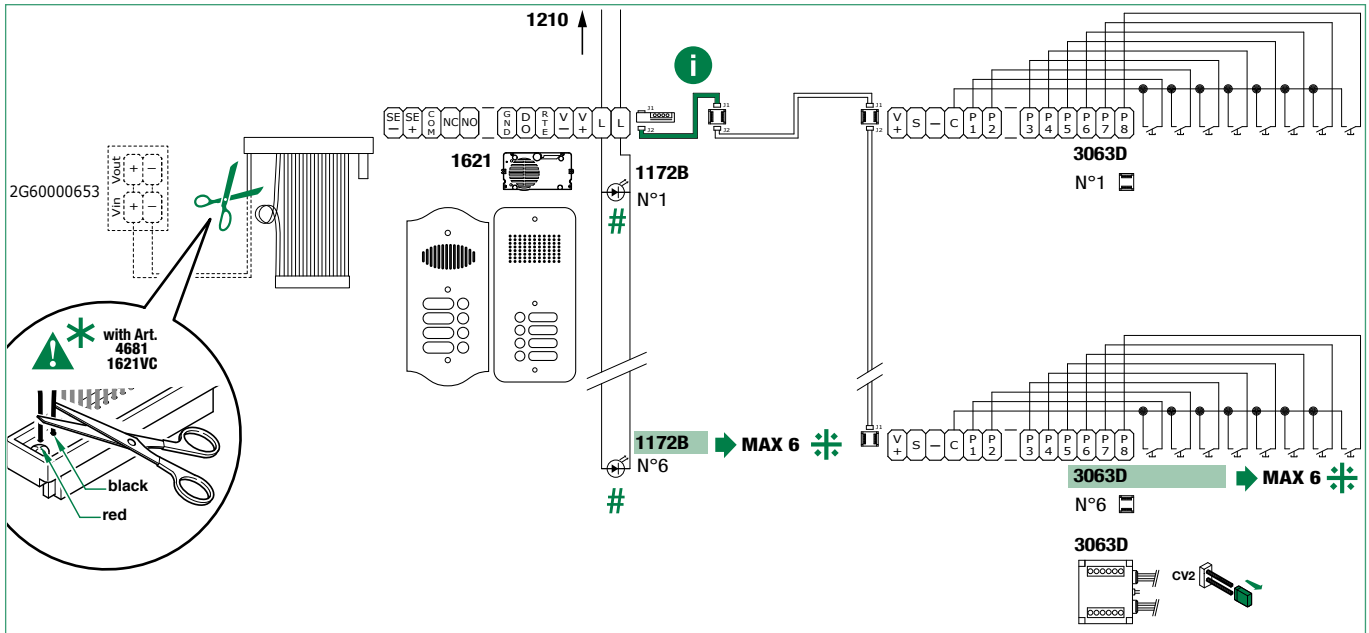

Use the cable included in Art. 1250IV, Art. 1250IA

∗ Insulate the cables after cutting them

⁜ MAX 6 Art. 3063D plus up to 6 Art. 1172B

\# Use bulb Art. 1172B for nameplate lighting. The bulb is polarised.

Connection of Art. 3063D with additional power supply

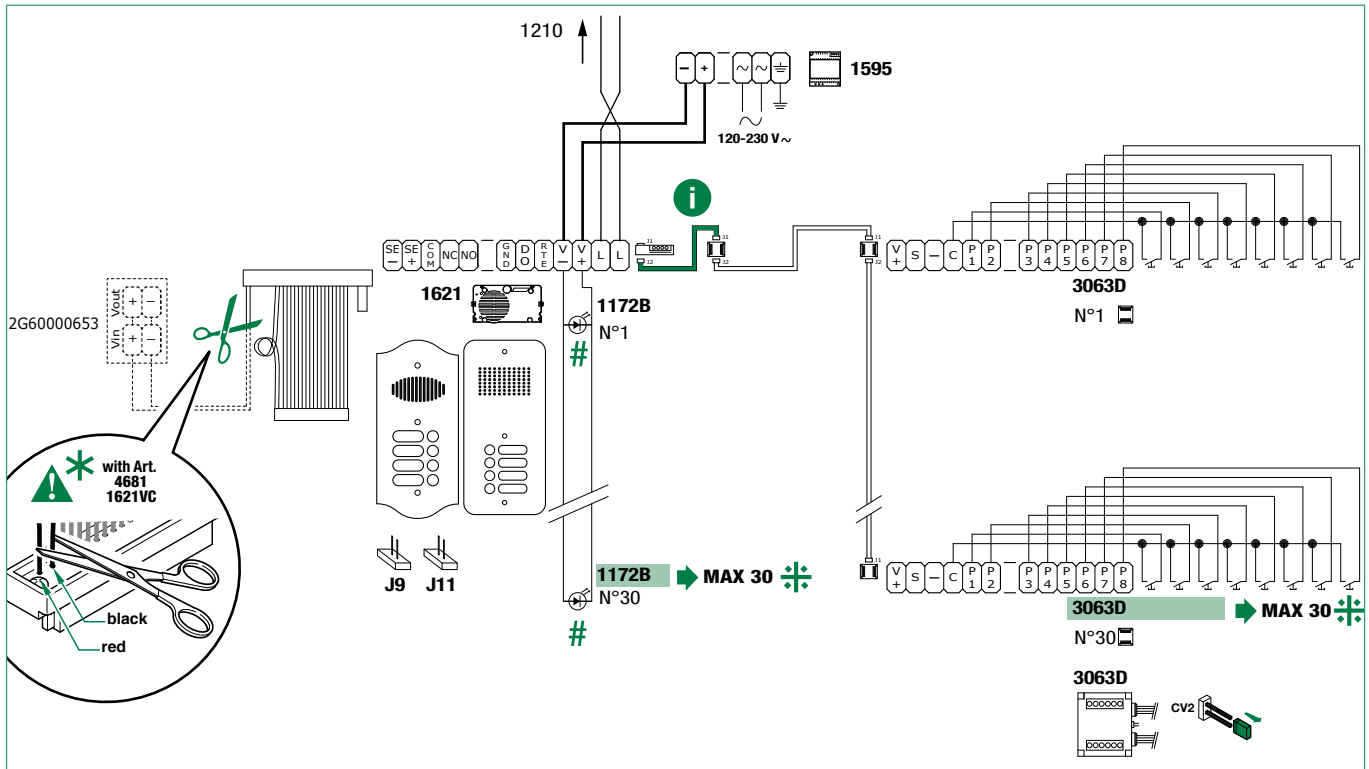

Use the cable included in Art. 1250IV, Art. 1250IA

∗ Insulate the cables after cutting them

⁜ MAX 30 Art. 3063D plus up to 30 Art. 1172B.

\# Use bulb Art. 1172B for nameplate lighting. The bulb is polarised.

Simplekey modules

Connection with Art. SK9015 for connection of readers Art. SK9000I and Art. SK9001I

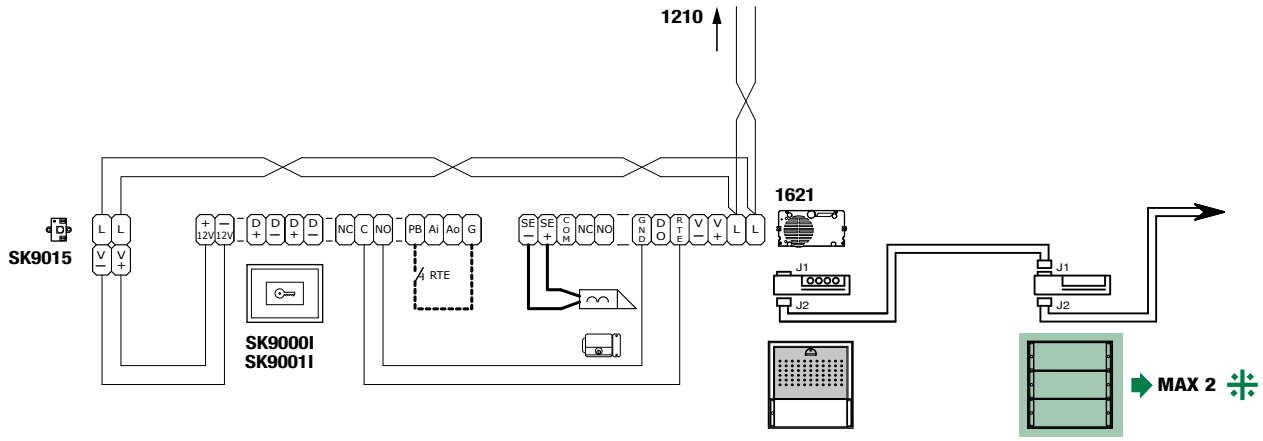

MAX 2 modules

Button programming

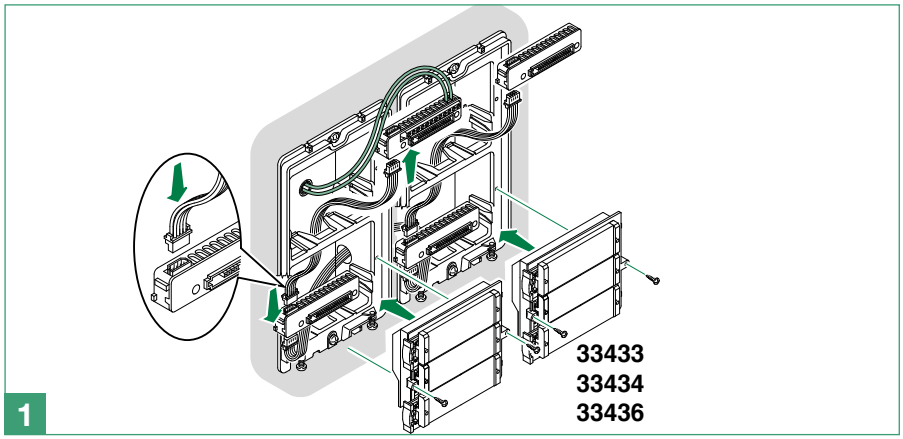

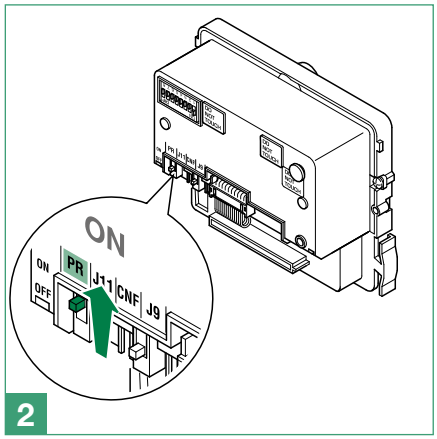

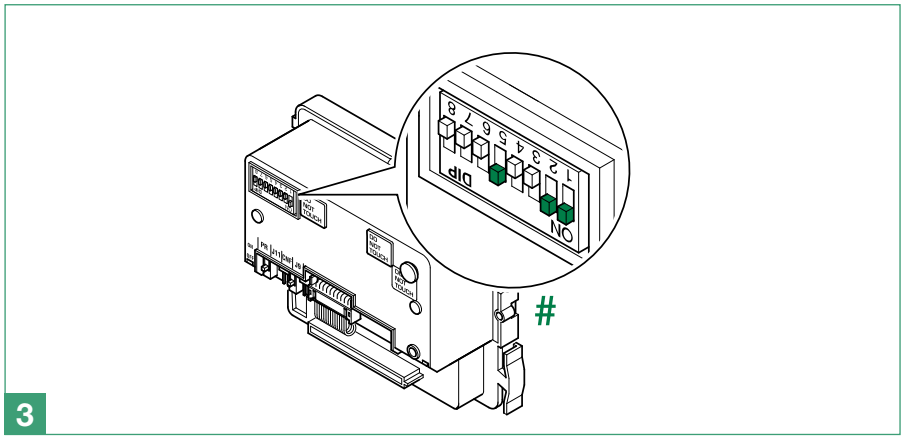

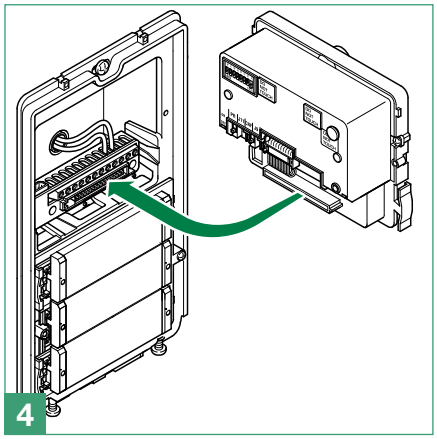

Set the user code using the dip switches; see “addressing table”.

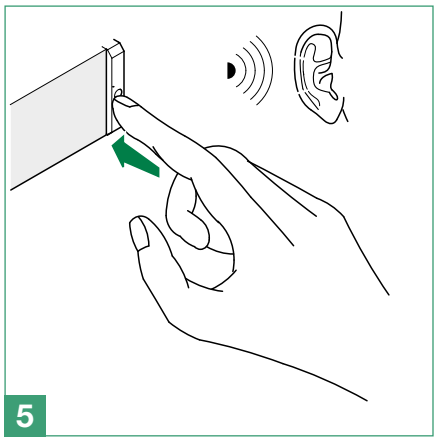

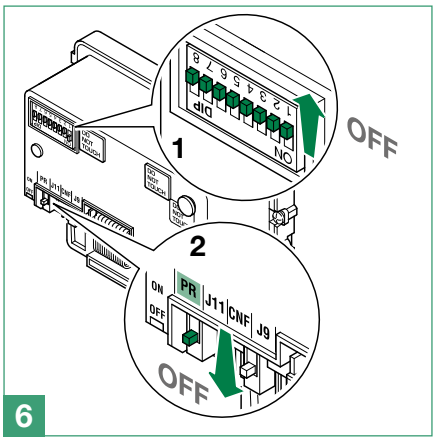

Special programmes

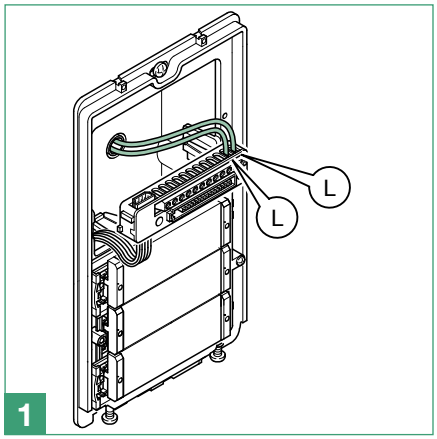

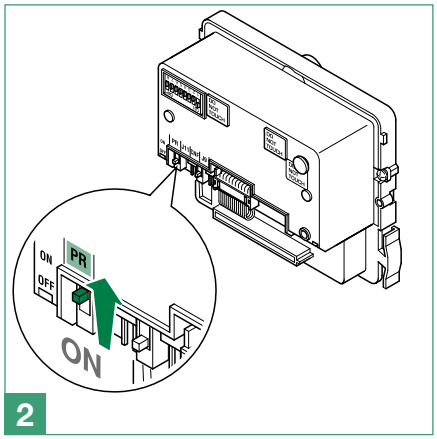

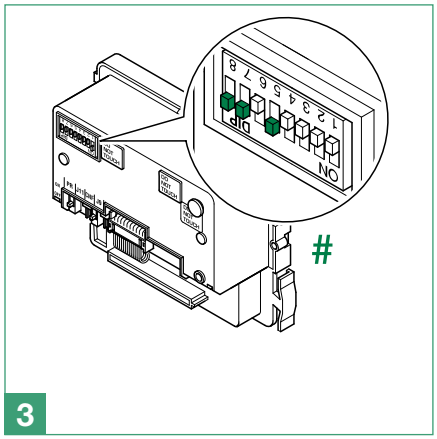

Set the dip switches for the function you wish to program, see the table.

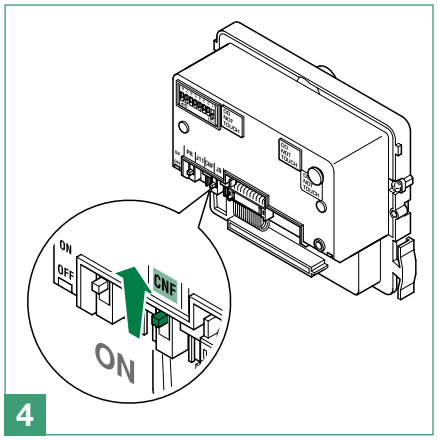

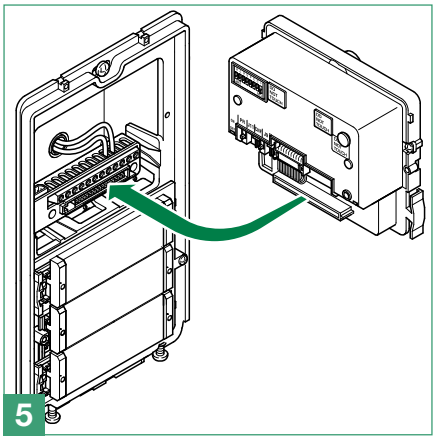

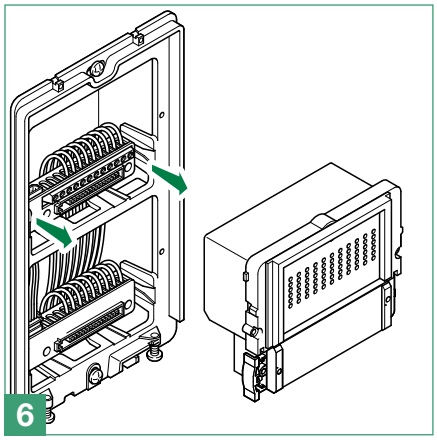

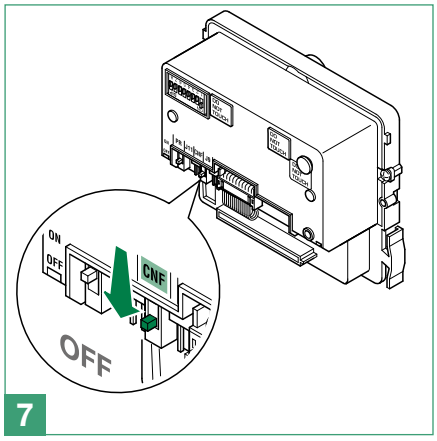

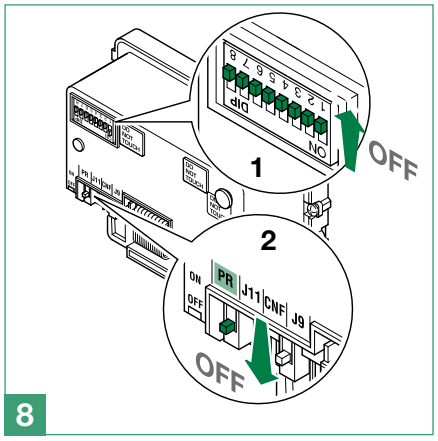

CODE	DIP SWITCHES ON	FUNCTIONS
		Audio-visual messages
195	1,2,7,8	Hebrew
196	3,7,8	Polish
197	1,3,7,8	Catalan
198	2,3,7,8	Galician
199	1,2,3,7,8	Basque
206	2,3,4,7,8	Danish
207	1,2,3,4,7.8	Norwegian
211	1,2,5,7,8	Swedish
215	1,2,3,5,7.8	Italian
216	4,5,7,8	French
217	1,4,5,7,8	Spanish
218	2,4,5,7,8	Dutch
219	1,2,4,5,7.8	Greek
220	3,4,5,7,8	English
221	1,3,4,5,7.8	German
222	2,3,4,5,7.8	Portuguese
202	2,4,7,8	Enables voice message (door opened warning) when the RTE contact is closed
203	1,2,4,7,8	Disables voice message (door opened warning) when the RTE contact is closed (default setting)
210	2,5,7,8	Visual messages only
214	2,3,5,7,8	OFF (default)
		Actuator command management **N.B. Art. 1256 in generic actuator mode must not be present in the system.**
227	1,2,6,7,8	Actuator function on S serial line = enabled
228	3,6,7,8	Actuator function on S serial line = disabled (default)
229	1,3,6,7,8	C.NC.NO relay activation on actuator command: 2 sec
230	2,3,6,7,8	C.NC.NO relay activation on actuator command: 4 sec
231	1,2,3,6,7.8	C.NC.NO relay activation on actuator command: 8 sec
		Door lock
245	1,3,5,6,7.8	Door lock time: 2 sec + disabling tone (default)
246	2,3,5,6,7.8	Door lock time: 4 sec
247	1,2,3,5,6,7,8	Door lock time: 8 sec
248	4,5,6,7,8	Door lock confirmation tone: enabled
251	1,2,4,5,6,7,8	Relay C.NC.NO in parallel to SE (default)
252	3,4,5,6,7.8	Lock-release always enabled (default)
253	1,3,4,5,6,7,8	Lock-release only enabled for user called
		System functions
232	4,6,7,8	Awaiting response time: 60 sec (default)
233	1,4,6,7,8	Awaiting response time: 120 sec
234	2,4,6,7,8	Awaiting response time: 30 sec
235	1,2,4,6,7,8	Talk time: 90 sec. (default)

236	3,4,6,7,8	Talk time: 180 sec
237	1,3,4,6,7.8	Self-ignition: enabled (default)
238	2,3,4,6,7.8	Self-ignition: disabled
239	1,2,3,4,6,7,8	Confirmation tone on user call = enabled (default)
240	5,6,7,8	Confirmation tone on user call = disabled
243	1,2,5,6,7.8	Awaiting reset time: 10 sec (default)
244	3,5,6,7,8	Awaiting reset time: 1 sec
208	5,7,8	Reset after lock-release in audio: enabled (default)
209	1,5,7,8	Disables “awaiting reset time” on lock-release command (awaiting response time or talk time will be activated).
249	1,4,5,6,7.8	Call transmission: single (default)
250	2,4,5,6,7.8	Call transmission: triple
		System mode
0		Simplebus (default)
255	1,2,3,4,5,6,7.8	Simplebus Top
254	2,3,4,5,6,7,8	**Restore default**

Installation information

- The module Art. 1621 operates by default as a main external unit (timed busy signal). To set it as a secondary external unit (busy signal active for the whole time the riser is in use), set all the selector DIP switches to ON.
- When a call is transmitted from the external unit, if a busy tone is heard instead of the ringtone, this means communication with another external unit is in progress.

System performance and layouts

For further information of system performance and to view installation layouts, click on the type of system that best meets your needs:

- **SB2 audio system** for the creation of audio systems for *residential complexes.*

Table of contents

Warning

Description **183**
- Art. 4680C - Compatibility table 183
- Art. 1622VC/1622VCF - Compatibility table 183
- **Connecting the remote camera** **184**

Technical characteristics **185**

External unit installation **187**

Connections **189**
- **4680C/1622VC/1622VCF connections** **189**
- **Remote camera connection (Art. 1622VC / 1622VCF only)** **189**
- **Variants** **190**

Module connection **191**
- **Ikall / Ikall Metal modules** **191**
  - Connection of button modules 33433, 33434, 33436, 33433M, 33434M, 33436M 191
  - Connection of Art. 3348B, 3348BM 191
  - Connection of Art. 3360B, 3360BM 191
- **Vandalcom modules** **192**
  - Connection of Art. 3064S 192
  - Connection of Art. 3188SB 192
  - Connection of Art. 3070S, 3072S 193
- **Modules for Single-plate external unit** **193**
  - Connection of Art. 3063D 193

Button programming **194**

Special programmes **195**
- **Installation information** **197**

System performance and layouts **197**

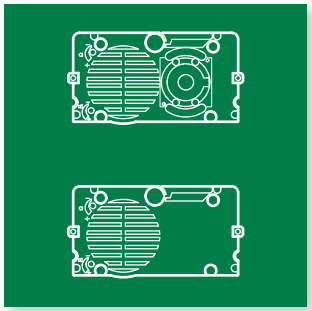

Audio/video module for SBTOP system
Art. 4680C, 1622VC, 1622VCF

Description

*Article **4680C** is a colour audio-video module which is compatible with Comelit "SBTOP" video entry systems, exclusively for use in conjunction with riser power supply unit Art. 4888C.*

It can be installed in Ikall, Ikall Metal, Vandalcom, Roma external units and can be finished with additional modules to meet all system requirements.

Art. 4680C - Compatibility table				
Ikall		***Ikall Metal***	***Vandalcom***	***Roma***
 33410		 33410M	 3268S/0	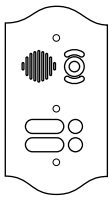 32xx/RI
 33411	 33411A	 33411M	 3268S/1	
 33412	 33412A	 33412M	 3268S/2	

*Item **1622VC/1622VCF** is an audio module allowing connection of a remote colour PAL camera. It is compatible with Comelit "SBTOP" video entry systems, exclusively for use in conjunction with riser power supply unit Art. 4888C.*

It can be installed in Ikall, Ikall Metal, Vandalcom, Roma external units and can be finished with additional modules capable of fulfilling all system requirements.

Art. 1622VC/1622VCF - Compatibility table				
Ikall		***Ikall Metal***	***Vandalcom***	***Roma***
 33400		 33400M	 3262S/0	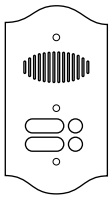 30xx/RI
 33401	 33401A	 33401M	 3262S/1	
 33402	 33402A	 33402M	 3262S/2	

To make use of the indicator LEDs (busy, call sent, door opened, communication active)**, faceplates from kit 33400K are available to purchase separately for the IKALL series.**

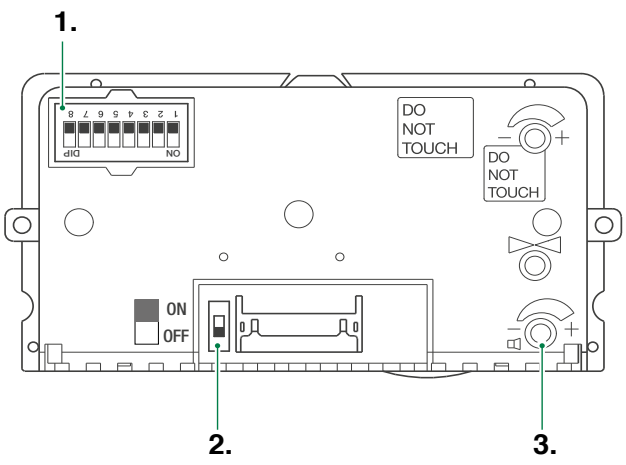

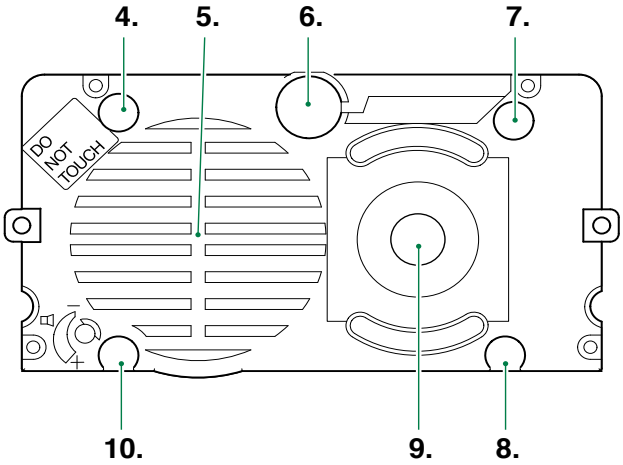

1. DIP switches for function programming and setting the user code.
2. Switch for confirming special programmes.
3. Loudspeaker volume control.
4. Indicator LED: call sent.
5. Loudspeaker.
6. Microphone.
7. Indicator LED: system busy.
8. Indicator LED: sound activated.
9. Colour camera (with Art. 4680C only).
10. Indicator LED: lock-release activated.

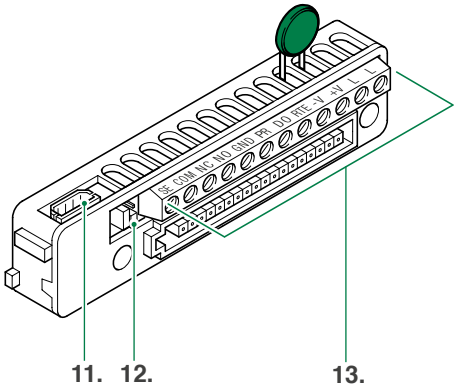

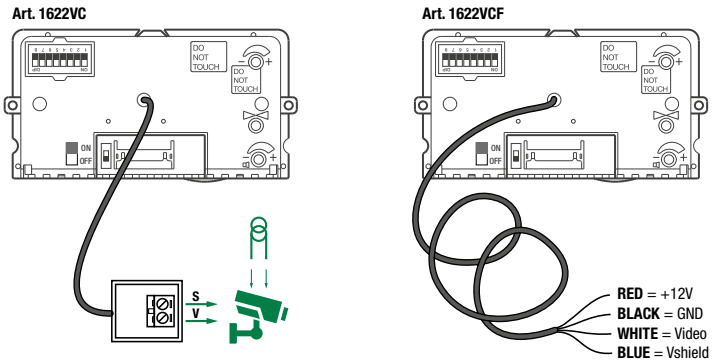

11. 8-pole cable connector.
12. RC network control for door lock filter on relay contacts (see **"Variants"**).
13. Terminal block for connection:
    SE electric lock connection
    COM common relay contact
    NC normally closed relay contact
    NO normally open relay contact
    GND input reference negative for DO-RTE
    PR programming input
    DO door opened signal input
    RTE local lock release input
    V- power supply negative
    V+ power supply positive
    LL bus line connection

Connecting the remote camera

Art. **1622VC** is supplied with a cable for the connection of a separately powered remote camera.

Art. **1622VCF** is supplied with a cable for the connection of a camera powered by the external unit (12 V-150 mA MAX).

Technical characteristics

	Art. 4680C
MAIN FEATURES	
Audio/video system	Yes
Horizontal resolution (TVL)	540
Minimum illumination (lux)	0.35
Lens size (mm)	3.60
Camera orientation	Yes
Clamps	L L V+V- RTE DO PR GND SE COM NC NO
Microphone volume control	Yes
Loudspeaker volume control	Yes
Operating temperature (°C)	-25 ÷ 55
S/N ratio (dB)	48
FUNCTIONS	
Key button function	Yes
HARDWARE SPECIFICATIONS	
Visual signalling	Yes
Acoustic signalling	Yes
Speech synthesis	Yes
SETTINGS	
Loudspeaker volume control	Yes
Microphone volume control	Yes
GENERAL DATA	
Product height (mm)	55
Product width (mm)	102
Product depth (mm)	38
COMPATIBILITY	
Simplebus Top audio/video system	Yes
ELECTRICAL SPECIFICATIONS	
Door release (dry contact bridge)	Yes
Door release (direct current output)	Yes

	Art. 1622VC	Art. 1622 VCF
MAIN FEATURES		
Audio/video system	Yes	Yes
Clamps	L L V+V- RTE DO PR GND SE COM NC NO	L L V+V- RTE DO PR GND SE COM NC NO
Microphone volume control	Yes	Yes
Loudspeaker volume control	Yes	Yes
Operating temperature (°C)	-25 ÷ 55	-25 ÷ 55
FUNCTIONS		
Key button function	Yes	Yes
HARDWARE SPECIFICATIONS		
Visual signalling	Yes	Yes
Acoustic signalling	Yes	Yes
Speech synthesis	Yes	Yes
SETTINGS		
Loudspeaker volume control	Yes	Yes
Microphone volume control	Yes	Yes
GENERAL DATA		
Product height (mm)	55	55
Product width (mm)	102	102
Product depth (mm)	38	38
COMPATIBILITY		
Simplebus Top audio/video system	Yes	Yes
ELECTRICAL SPECIFICATIONS		
Door release (dry contact bridge)	Yes	Yes
Door release (direct current output)	Yes	Yes

External unit installation

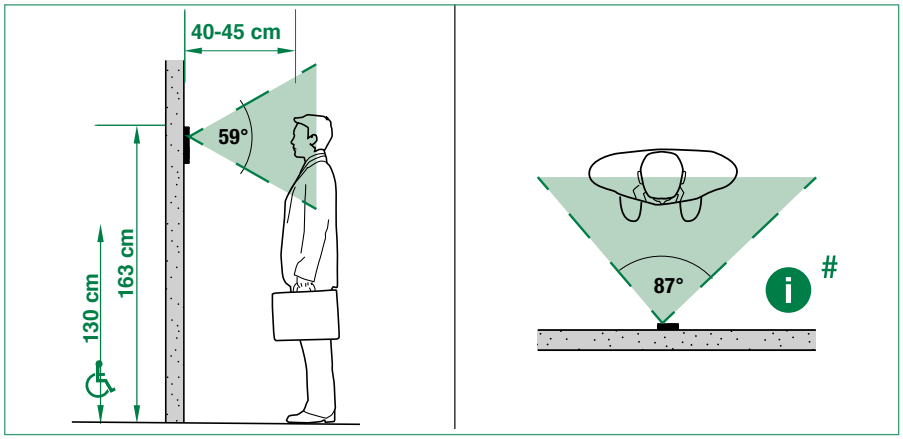

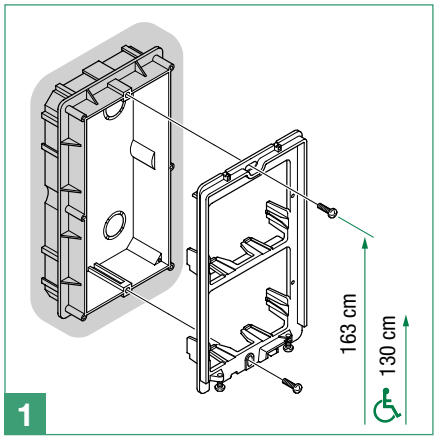

The camera must not be installed in front of light sources, or in places where the filmed subject is against the light.
In dim environments, we recommend additional lighting is provided.

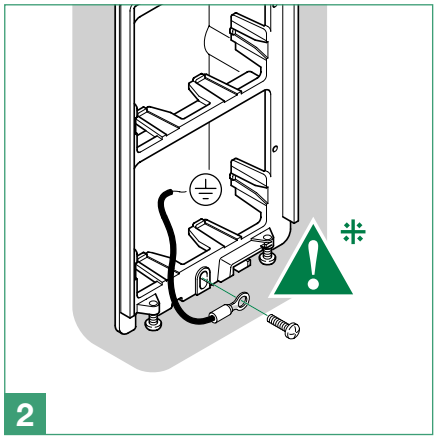

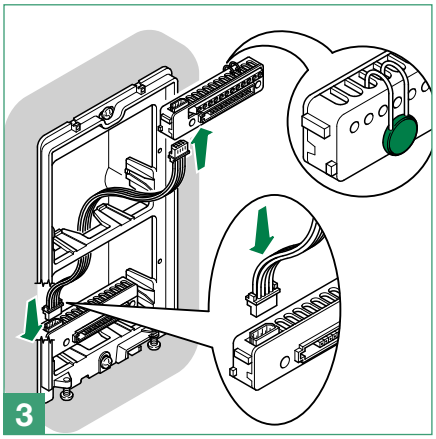

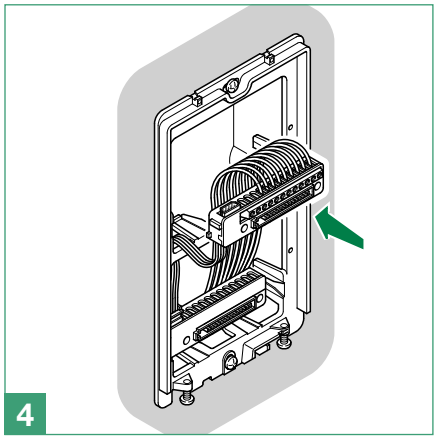

Connect the module support frame to earth.

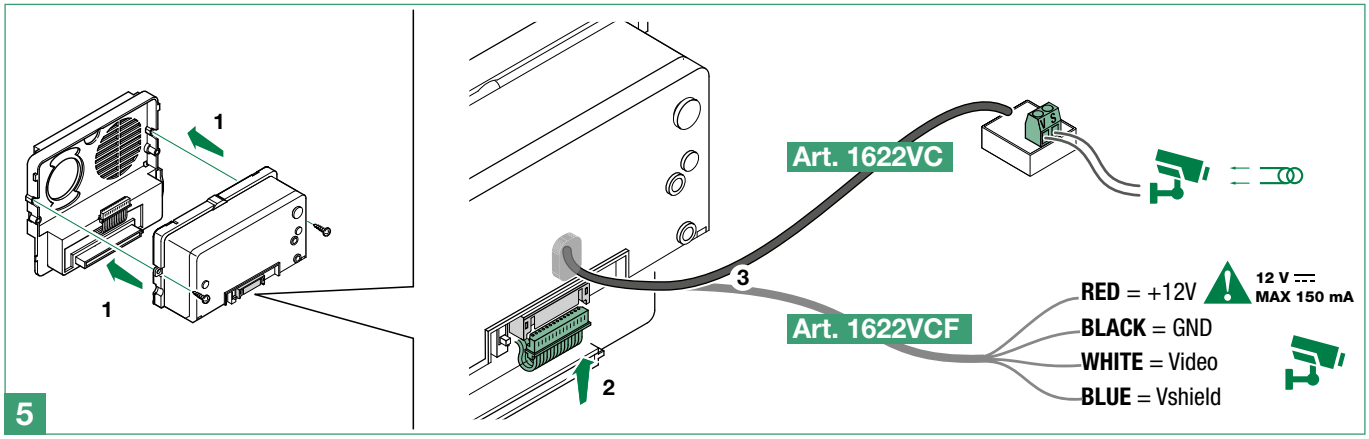

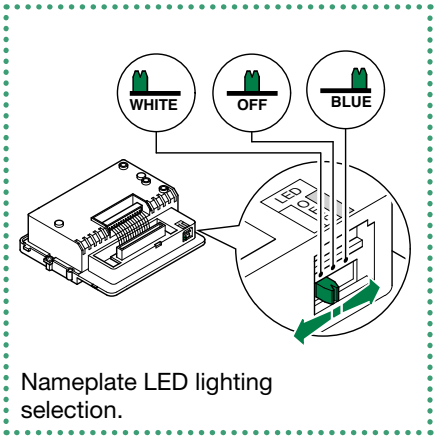

Nameplate LED lighting selection.

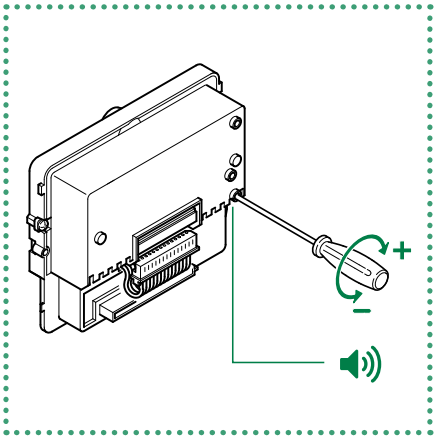

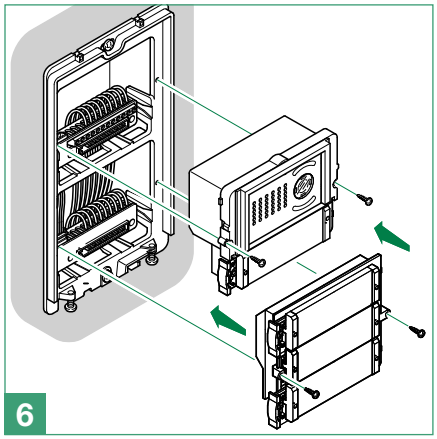

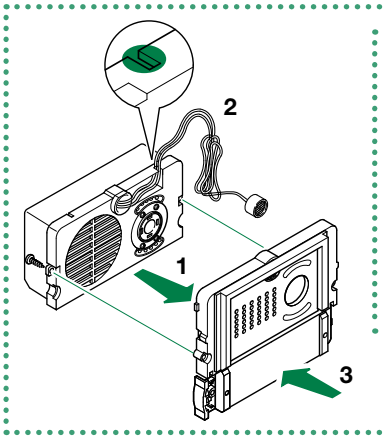

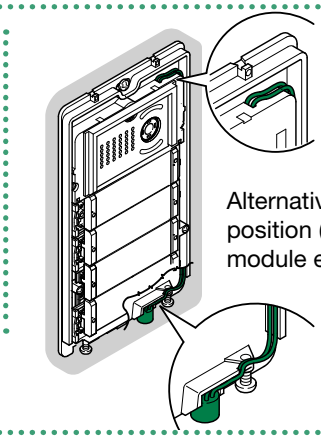

Alternative microphone position (excluding 4 module entrance panel).

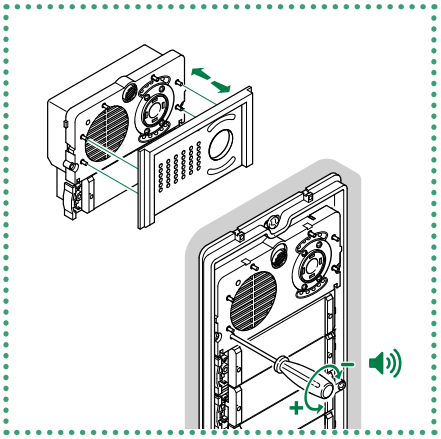

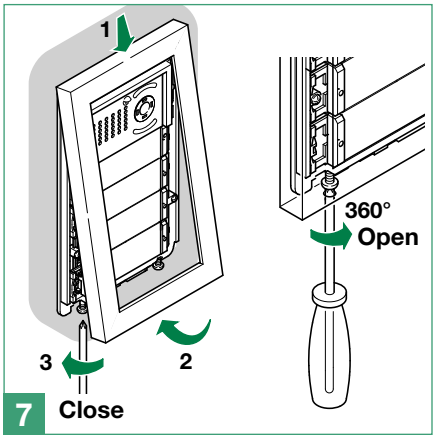

Connections

4680C/1622VC/1622VCF connections

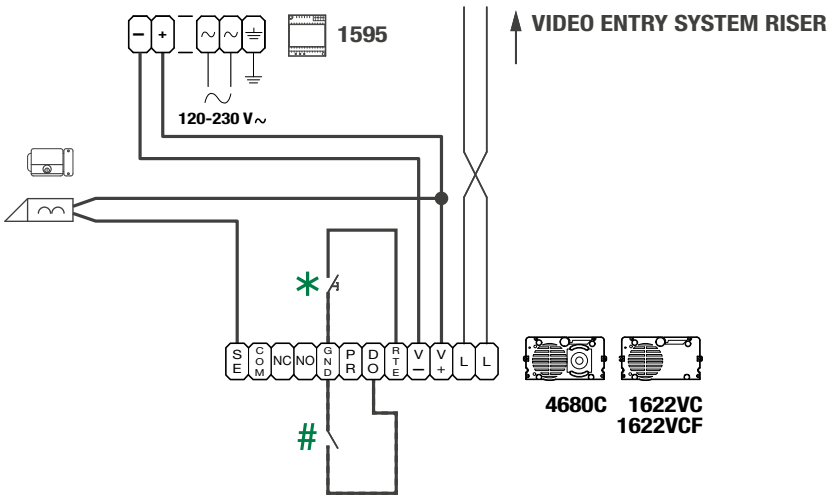

* **20 m max.** Local lock-release button.

Active input closed for DOOR OPEN signal.

Remote camera connection (Art. 1622VC / 1622VCF only)

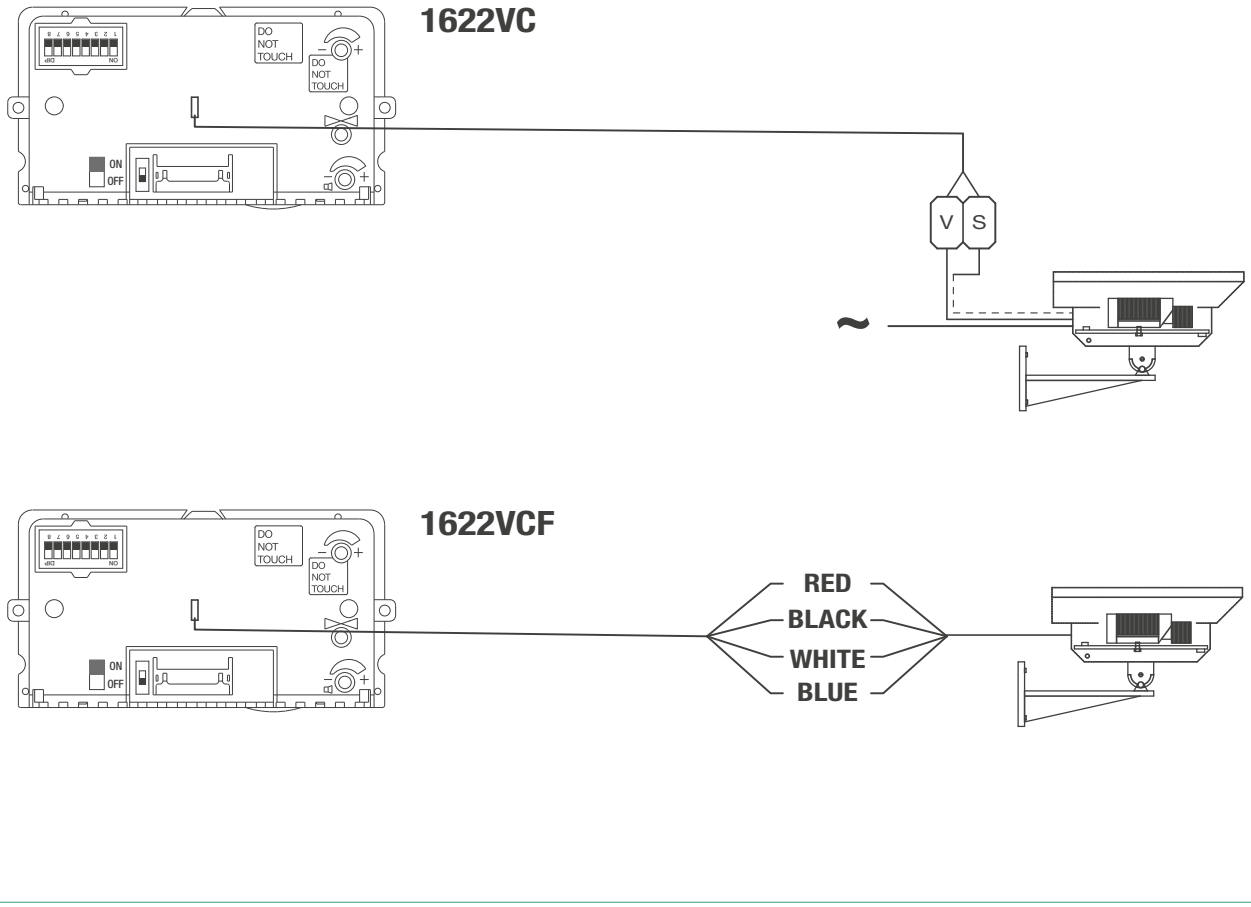

Variants

Variant for using the external unit relay

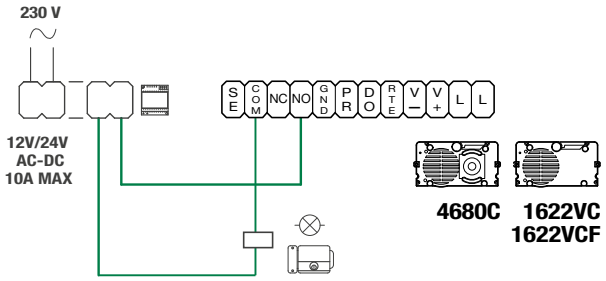

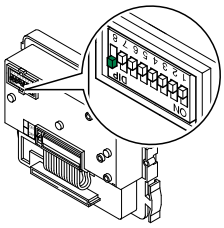

“C.NC.NO relay activation on actuator command: 2 sec”

Set dip switches in permanent mode as shown in figure (Dip switch 8 ON, Dip switches 1,2,3,4,5,6,7 OFF)

(Applies to Art. 4680C with R.I. 041 or greater)

Variant for using a safety lock

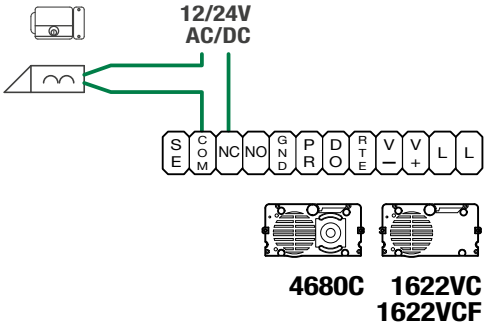

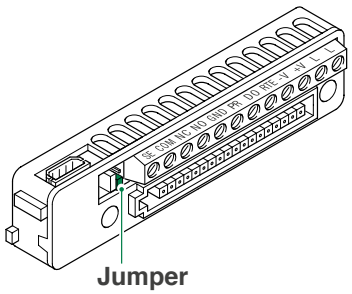

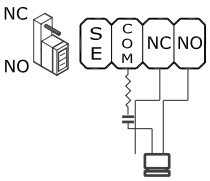

On C. NO. contacts

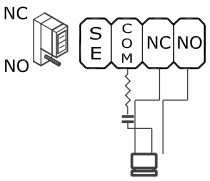

On C. NC. contacts

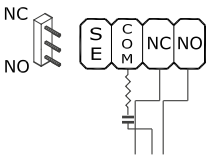

Excluded: voltage-free contact

Module connection

Ikall / Ikall Metal modules

Connection of button modules 33433, 33434, 33436, 33433M, 33434M, 33436M

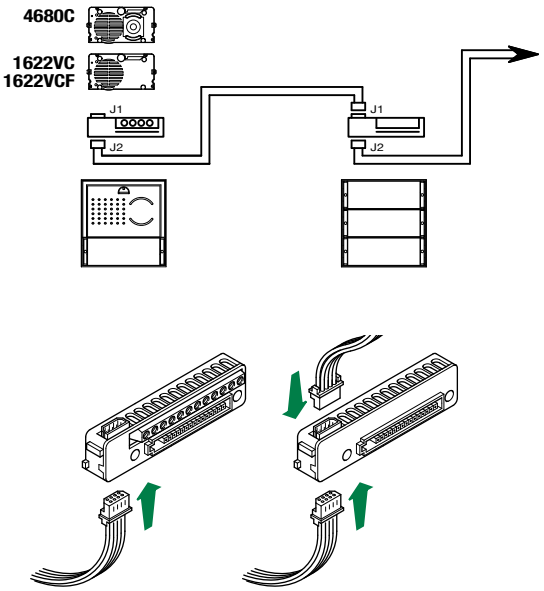

Connection of Art. 3348B, 3348BM

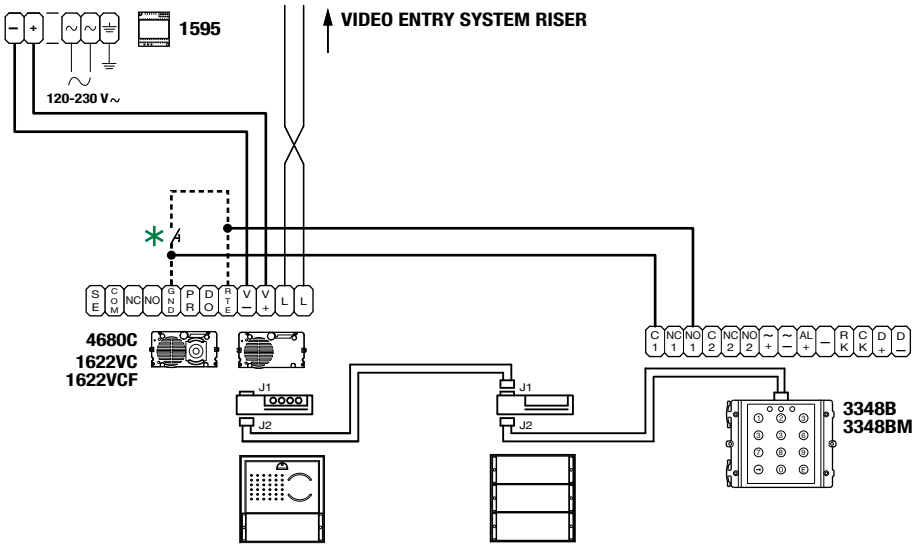

Connection of Art. 3360B, 3360BM

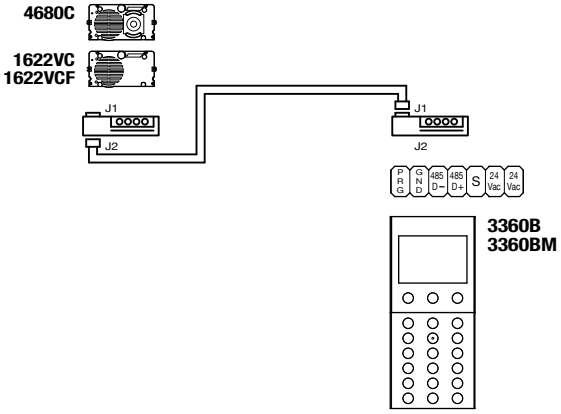

Vandalcom modules

Connection of Art. 3064S

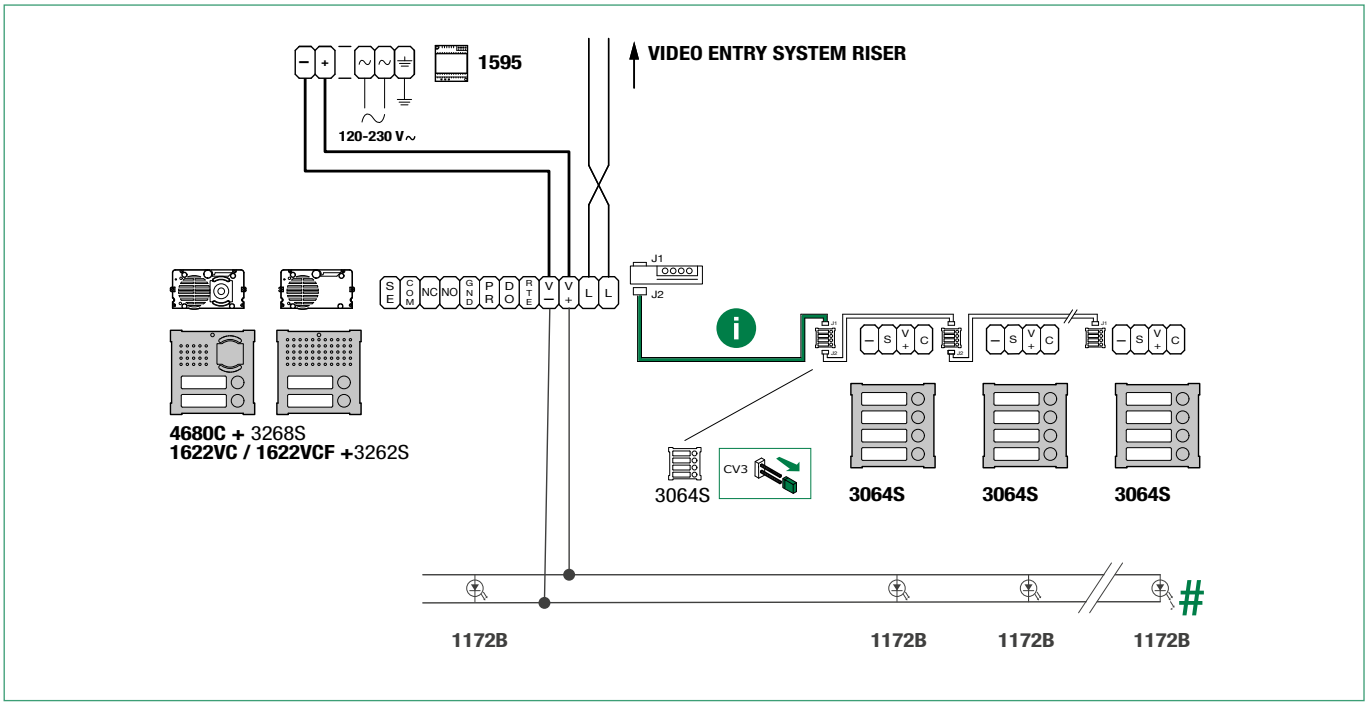

Use the cable supplied with Art. 3262S, 3268S

\# Use bulb Art. 1172B for nameplate lighting. The bulb is polarised.

Connection of Art. 3188SB

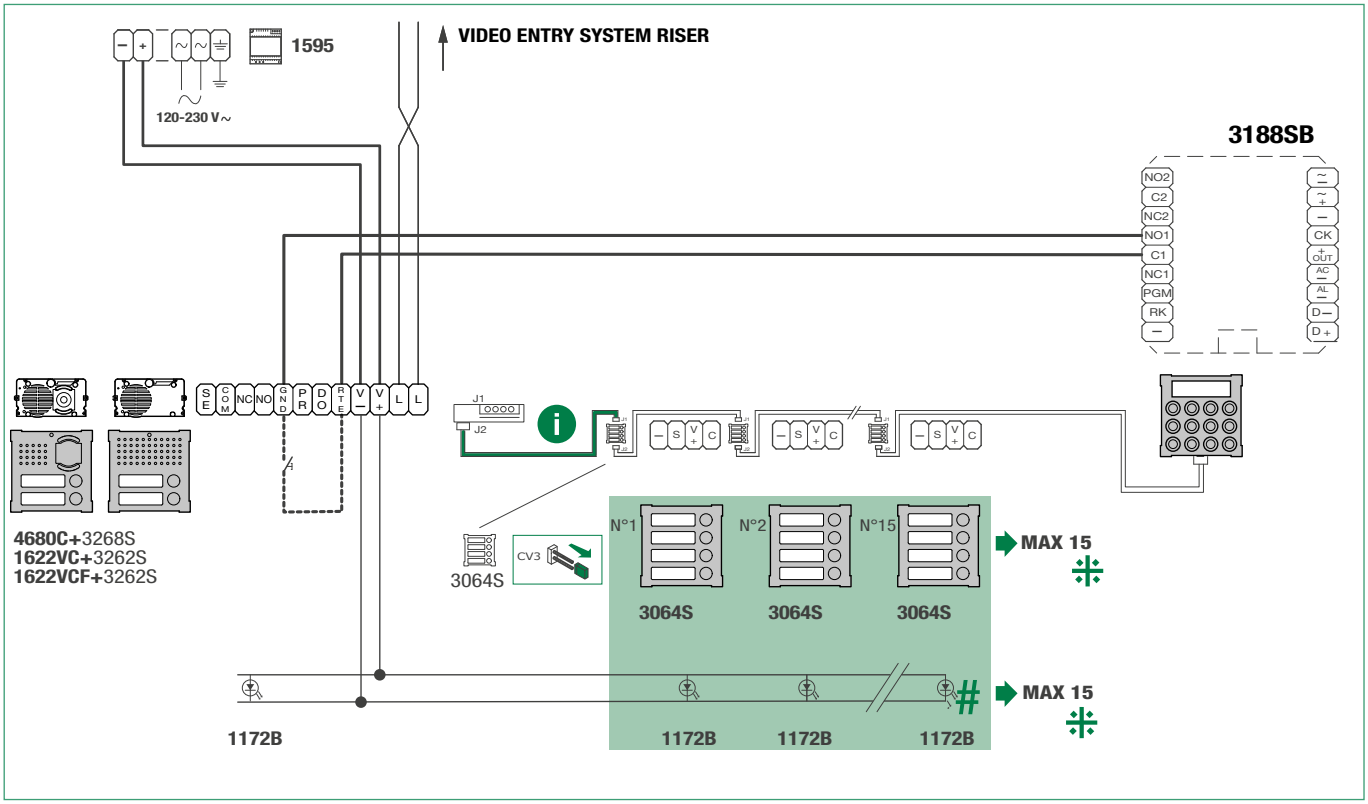

Use the cable supplied with Art. 3262S, Art. 3268S

⁜ MAX 15 modules.

\# Use bulb Art. 1172B for nameplate lighting. The bulb is polarised

Connection of Art. 3070S, 3072S

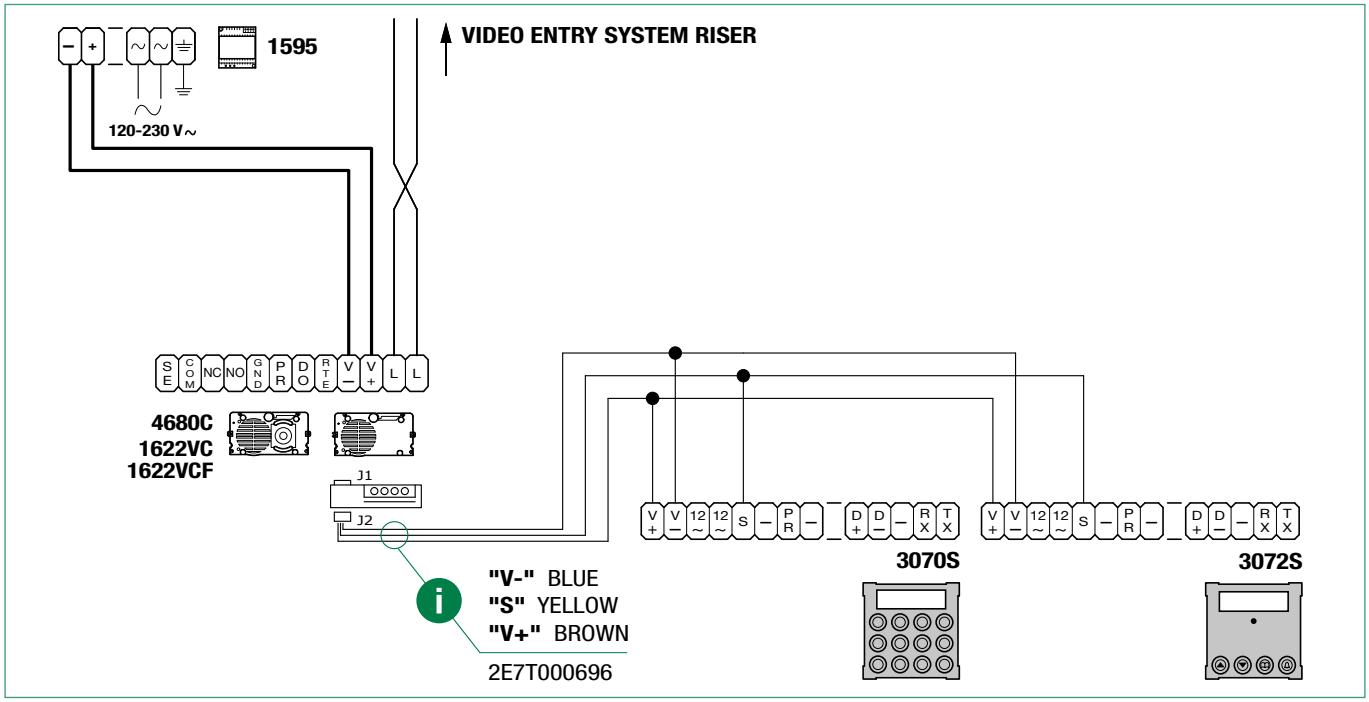

Use the cable 2E7T000696 supplied with Art. 3070S, Art. 3072S

Modules for Single-plate external unit

Connection of Art. 3063D

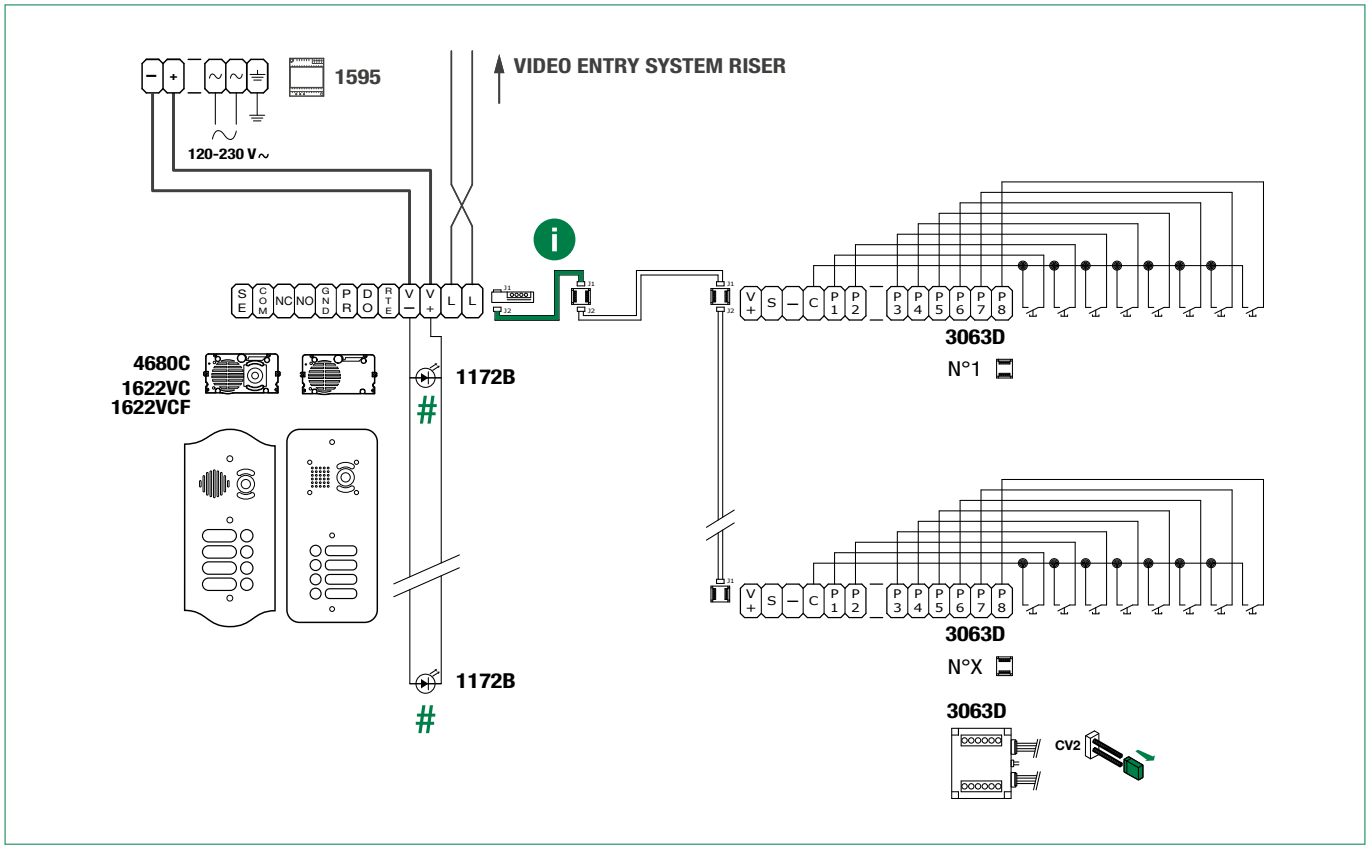

Use the cable included in Art. 1250IV, Art. 1250IA

\# **Use bulb Art. 1172B for nameplate lighting. The bulb is polarised**

Button programming

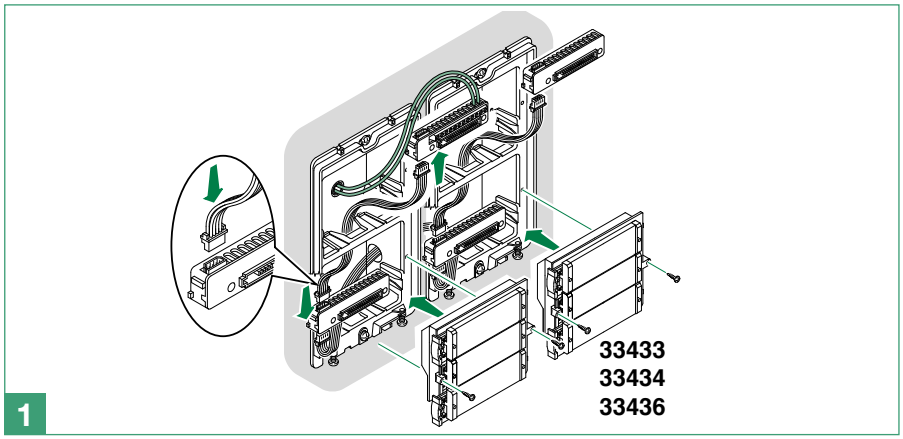

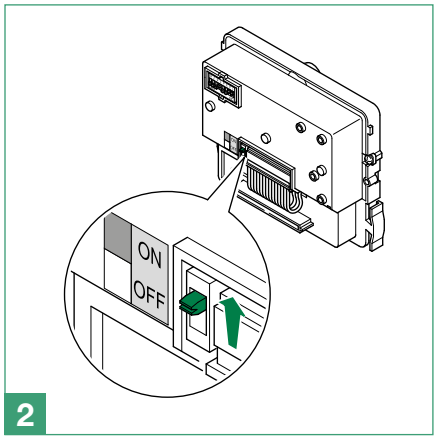

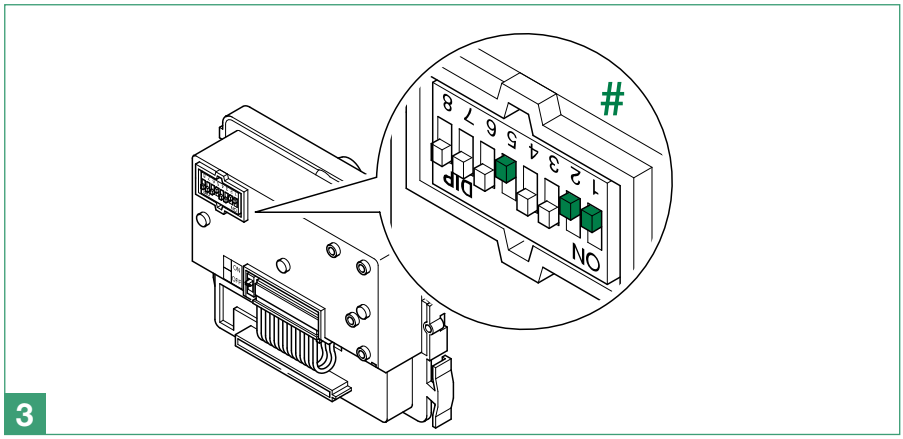

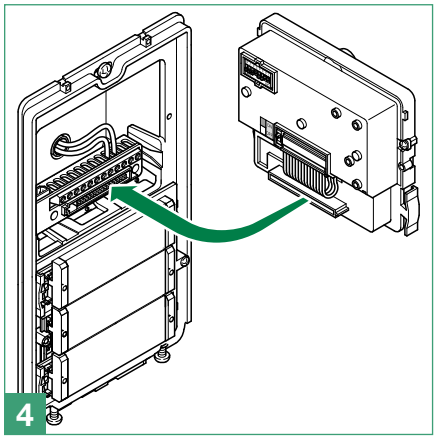

Set the user code using the dip switches; see “addressing table”.

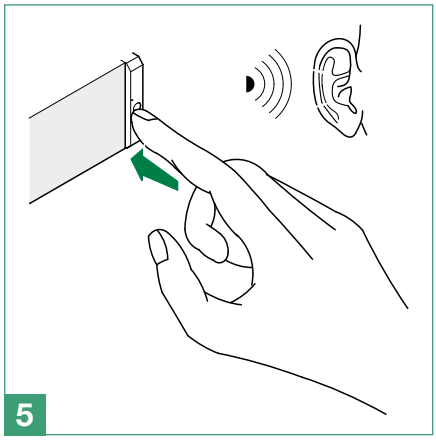

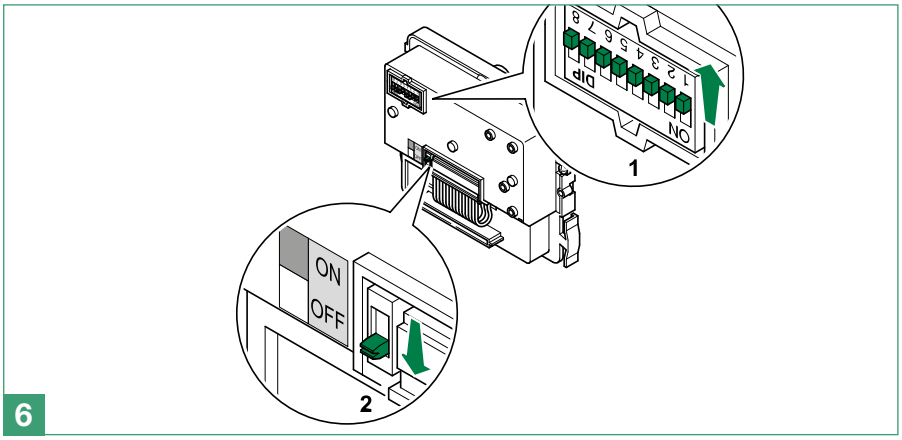

Special programmes

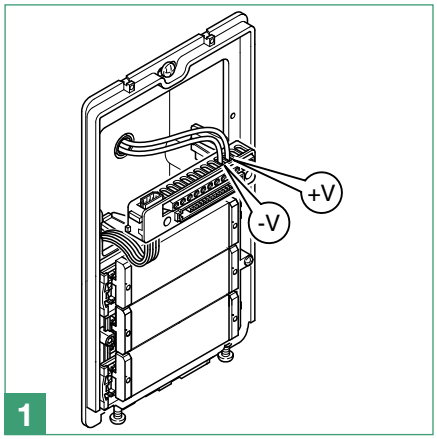

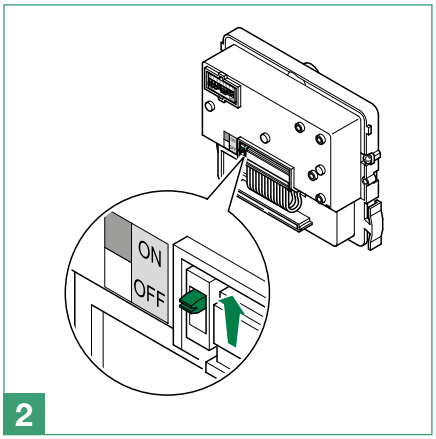

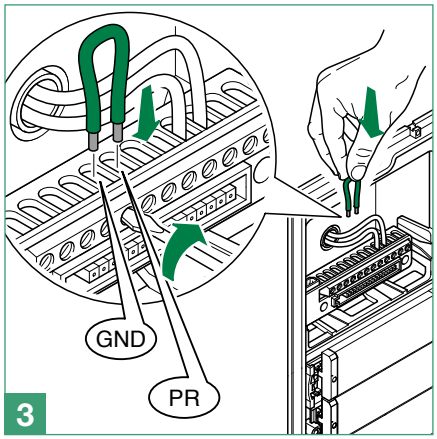

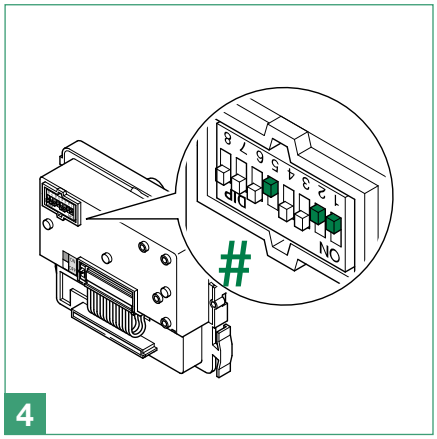

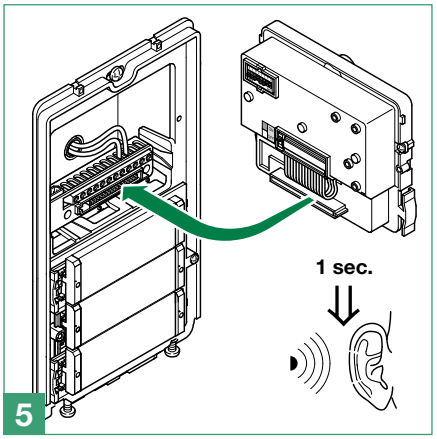

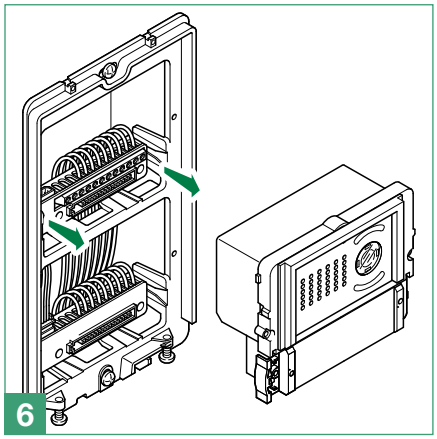

**Set the dip switches for the function you wish to program, see table below**

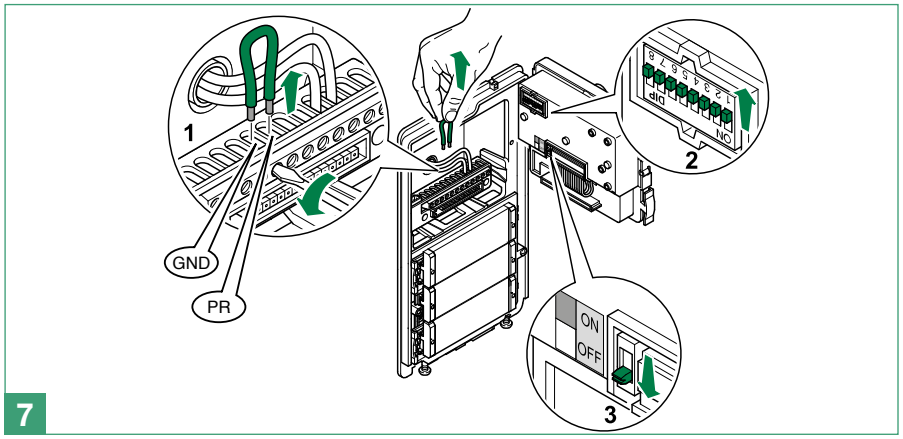

CODE	DIP SWITCH ON	FUCNTION
		De-misting heating element
213	1,3,5,7,8	OFF (default)
212	3,5,7,8	ON
		Audio-visual messages
210	2,5,7,8	visual messages only
211	1,2,5,7,8	Swedish
214	2,3,5,7,8	OFF (default)
215	1,2,3,5,7,8	Italian
216	4,5,7,8	French
217	1,4,5,7,8	Spanish
218	2,4,5,7,8	Dutch
219	1,2,4,5,7,8	Greek
220	3,4,5,7,8	English
221	1,3,4,5,7,8	German
222	2,3,4,5,7,8	Portuguese
202	2,4,7,8	Enables voice message (door opened warning) when the RTE contact is closed
203	1,2,4,7,8	Disables voice message (door opened warning) when the RTE contact is closed (default setting)
		Door lock
223	1,2,3,4,5,7,8	Door lock command on SE in AC (default)
224	6,7,8	Door lock command on SE in enhanced AC
225	1,6,7,8	Door lock command on SE in DC
245	1,3,5,6,7,8	Door lock time: 2 sec + deactivation tone (default)
246	2,3,5,6,7,8	Door lock time: 4 sec
247	1,2,3,5,6,7,8	Door lock time: 8 sec
248	4,5,6,7,8	Door lock confirmation tone: enabled
251	1,2,4,5,6,7,8	C.NC.NO relay in parallel with SE (default)
252	3,4,5,6,7,8	Lock-release always enabled (default)
253	1,3,4,5,6,7,8	Lock-release only enabled for user called
		Actuator control management **N.B. the system should not include Art. 1256 in generic actuator mode.**
229	1,3,6,7,8	Enabling C.NC.NO relay on actuator control: 2 sec
230	2,3,6,7,8	Enabling C.NC.NO relay on actuator control: 4 sec
231	1,2,3,6,7,8	Enabling C.NC.NO relay on actuator control: 8 sec
228	3,6,7,8	Actuator control on serial line S: disabled (default)
227	1,2,6,7,8	Actuator control on serial line S: enabled
		System functions
232	4,6,7,8	Awaiting response time: 60 sec (default)
233	1,4,6,7,8	Awaiting response time: 120 sec

234	2,4,6,7,8	Awaiting response time: 30 sec
235	1,2,4,6,7,8	Talk time: 90 sec (default)
236	3,4,6,7,8	Talk time: 180 sec
237	1,3,4,6,7,8	Self-ignition: enabled (default)
238	2,3,4,6,7,8	Self-ignition: disabled
239	1,2,3,4,6,7,8	Confirmation tone on user call: enabled (default)
240	5,6,7,8	Confirmation tone on user call: disabled
243	1,2,5,6,7,8	Reset wait time: 10 sec (default)
244	3,5,6,7,8	Reset wait time: 1 sec
208	5,7,8	Reset after lock-release in audio: enabled (default)
209	1,5,7,8	Reset after lock-release in audio: disabled
249	1,4,5,6,7,8	Call transmission: single (default)
250	2,4,5,6,7,8	Call transmission: triple
241	1,5,6,7,8	Control of internal units connected to Art. 4680C: up to 70 (default)
242	2,5,6,7,8	Control of internal units connected to Art. 4680C: from 71 to 100
		System mode
000		Simplebus (default)
255	1,2,3,4,5,6,7,8	Simplebus Top
254	**2,3,4,5,6,7,8**	**Restore default**

Installation information

- The module Art. 4680C / 1622VC / 1622VCF operates by default as a main external unit (timed busy signal).
  To set it as a secondary external unit (busy signal active for the whole time the riser is in use), set all the selector DIP switches to ON.
- When a call is transmitted from the external unit, if a busy tone is heard instead of the ringtone, this means communication with another external unit is in progress.

System performance and layouts

For further information of system performance and to view installation layouts, click on the type of system that best meets your needs:

- **SBTOP audio/video system** for the creation of audio-video systems for *residential complexes*

Table of contents

Warning

Description 199
Art. 1622 - Compatibility table 199
Technical characteristics 200
External unit installation 201
Connections 202
Variants 202
Module connection 203
Ikall / Ikall Metal modules 203
Connection of button modules 33433, 33434, 33436, 33433M, 33434M, 33436M 203
Connection Art. 3348B, 3348BM 203
Connection Art. 3360B, 3360BM 203
Vandalcom modules 204
Connection Art. 3064S 204
Connection Art. 3188SB 204
Connection Art. 3070S, 3072S 205
Modules for Single-plate external unit 205
Connection Art. 3063D 205
Button programming 206
Special programmes 207
Installation information 209
System performance and layouts 209

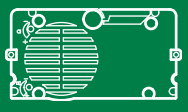

Audio module for SB1 system
Art. 1622

Description

*Art. **1622** is an audio module which is compatible with Comelit "SB1" entry phone systems, exclusively for use in conjunction with power supply unit Art. 1595.*

It can be installed in Ikall, Ikall Metal, Vandalcom and Roma series external units and can be finished with additional modules to meet all system requirements.

Art. 1622 - Compatibility table				
Ikall		***Ikall Metal***	***Vandalcom***	***Roma***
 33400		 33400M	 3262S/0	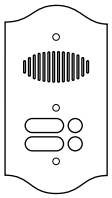 30xx/RI
 33401	 33401A	 33401M	 3262S/1	
 33402	 33402A	 33402M	 3262S/2	

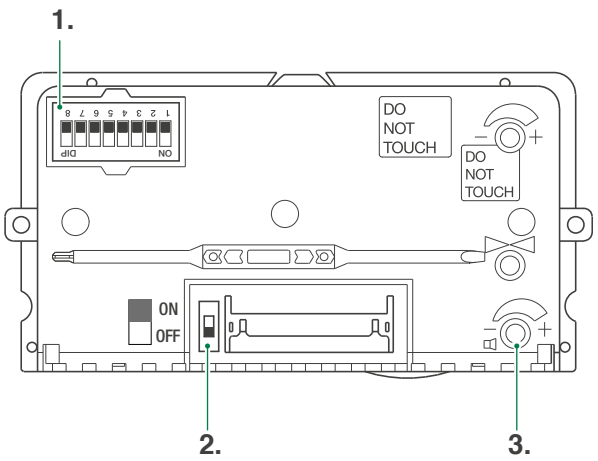

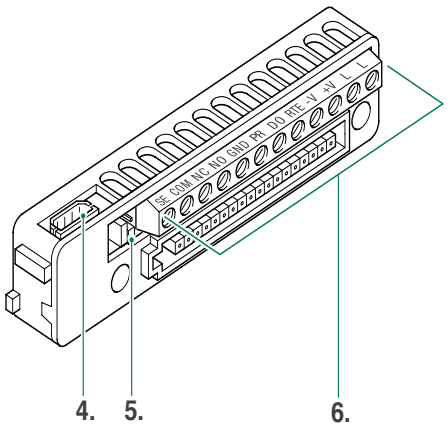

1. DIP switches for function programming and setting the user code.

2. Switch for input/output programming.

3. Loudspeaker volume control.

4. Connector for additional module connection.

5. Jumper for managing the RC network for door lock filter on relay contacts. (vedi **variants**).

6. Terminal block for connection:
- **SE** connection for electric door lock
- **COM** common relay contact
- **NC** relay normally closed contact
- **NO** relay normally open contact
- **GND** input reference negative for DO-RTE
- **PR** programming input
- **DO** door open indication input
- **RTE** local request to exit input
- **V-** power supply negative
- **V+** power supply positive
- **LL** bus line connection

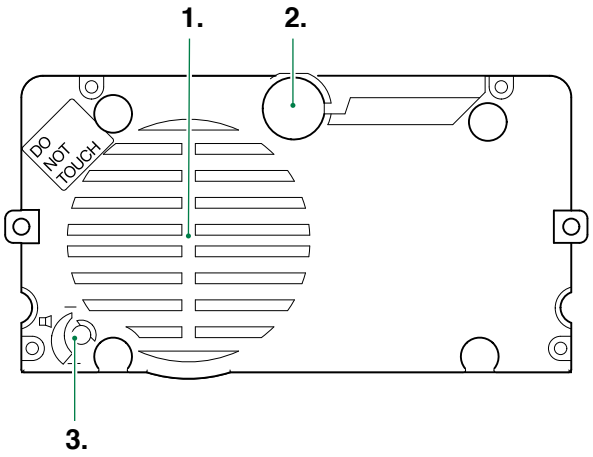

1. Loudspeaker.

2. Microphone.

3. Loudspeaker volume control.

Technical characteristics

	Art. 1622
MAIN FEATURES	
Audio system	Yes
Audio/video system	Yes
Clamps	L L V+V- RTE DO PR GND SE COM NC NO
Microphone volume control	Yes
Loudspeaker volume control	Yes
Operating temperature (°C)	-25 ÷ 55
FUNCTIONS	
Key button function	Yes
SETTINGS	
Loudspeaker volume control	Yes
Microphone volume control	Yes
GENERAL DATA	
Product height (mm)	55
Product width (mm)	102
Product depth (mm)	38
COMPATIBILITY	
Simplebus 1 audio system	Yes
ELECTRICAL SPECIFICATIONS	
Door release (dry contact bridge)	Yes
Door release (direct current output)	Yes

External unit installation

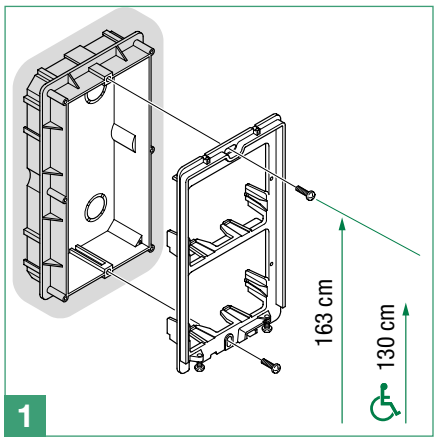

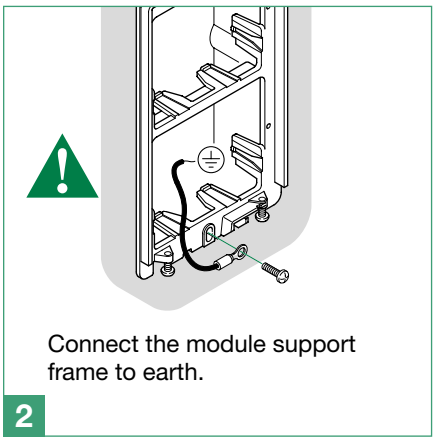

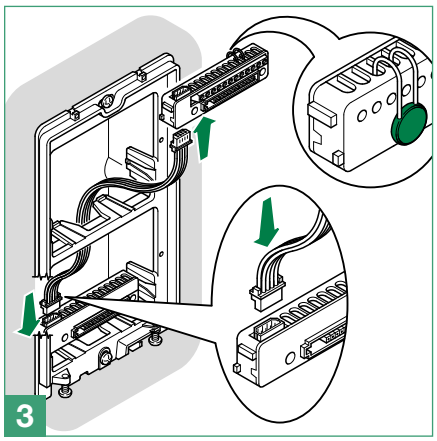

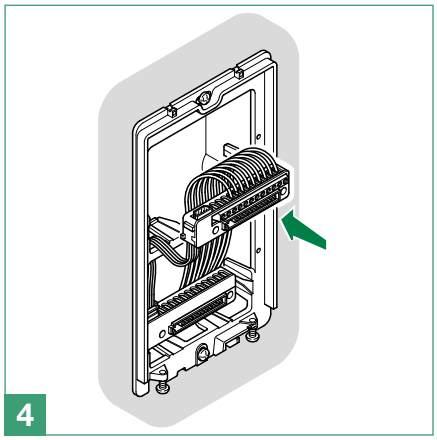

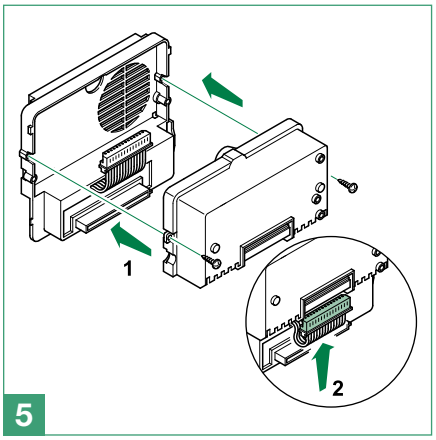

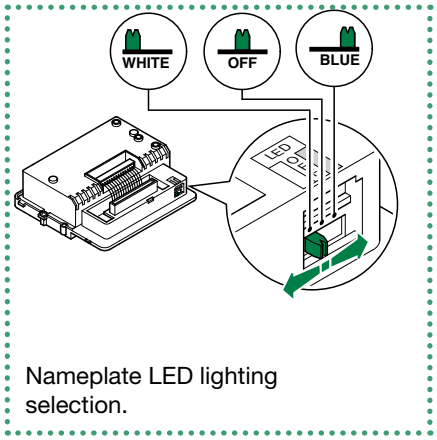

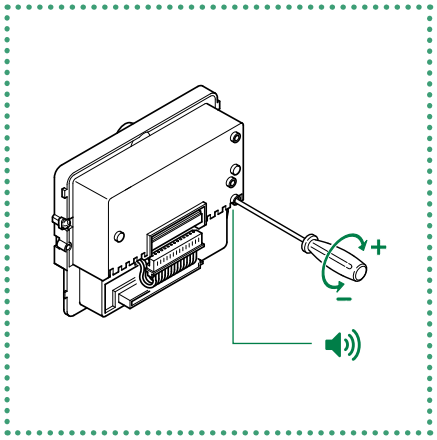

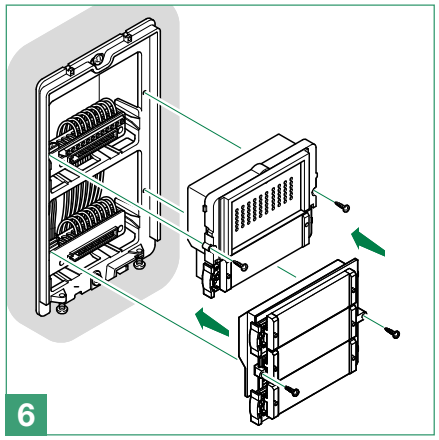

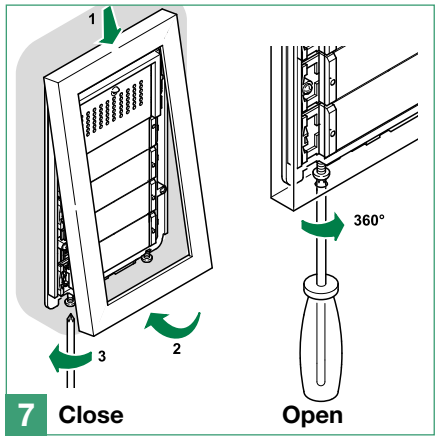

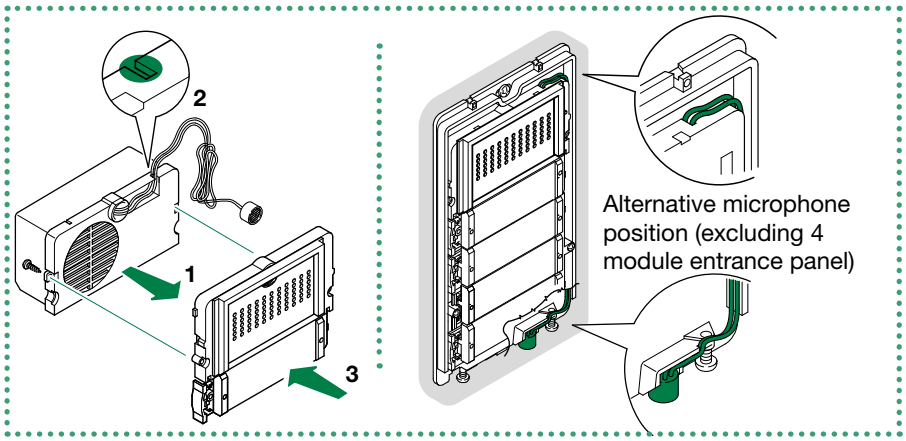

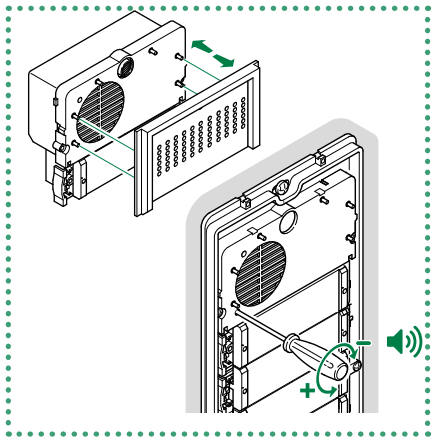

Connections

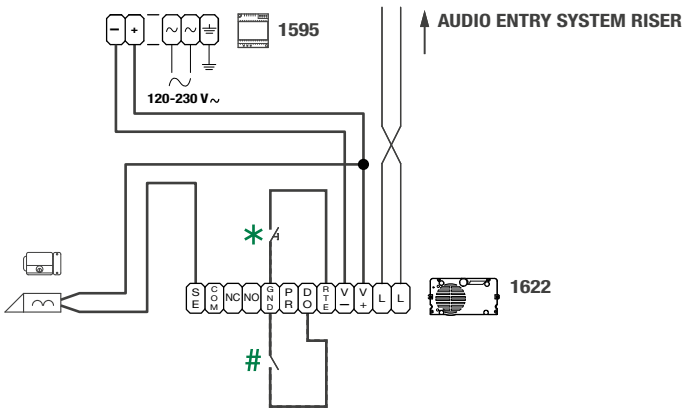

* **20m max.** Local lock-release button.

Active input closed for DOOR OPEN signal.

Variants

Variant for using the external unit relay

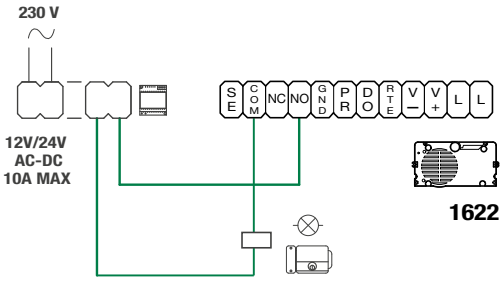

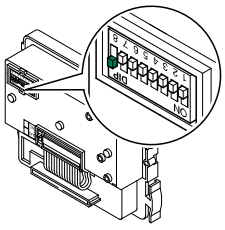

“C.NC.NO relay activation on actuator command: 2 sec”

Set dip switches in permanent mode as shown in figure (Dip switch 8 ON, Dip switches 1,2,3,4,5,6,7 OFF)

Applies to Art. 1622 with R.I. 038 or greater

Variant for using a safety lock

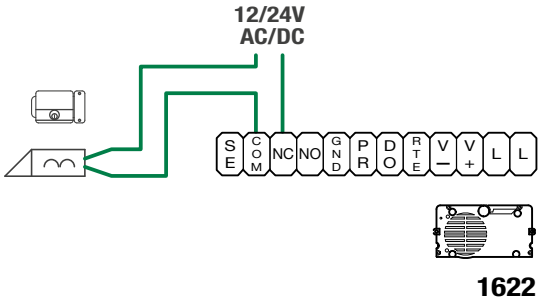

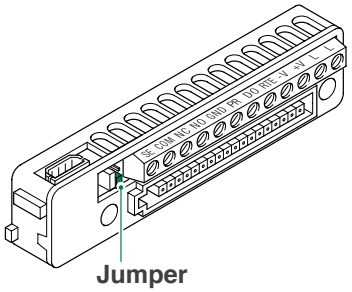

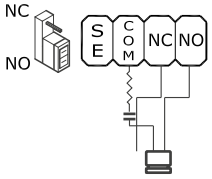

On C. NO. contacts.

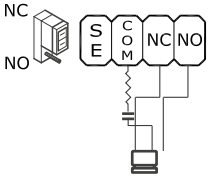

On C. NC contacts

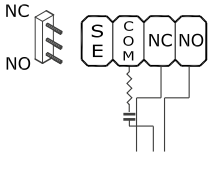

Excluded: voltage-free contact

Module connection

Ikall / Ikall Metal modules

Connection of button modules 33433, 33434, 33436, 33433M, 33434M, 33436M

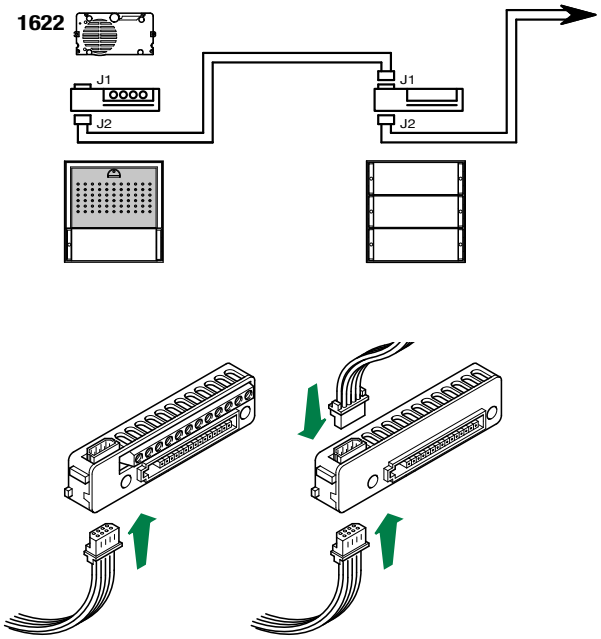

Connection Art. 3348B, 3348BM

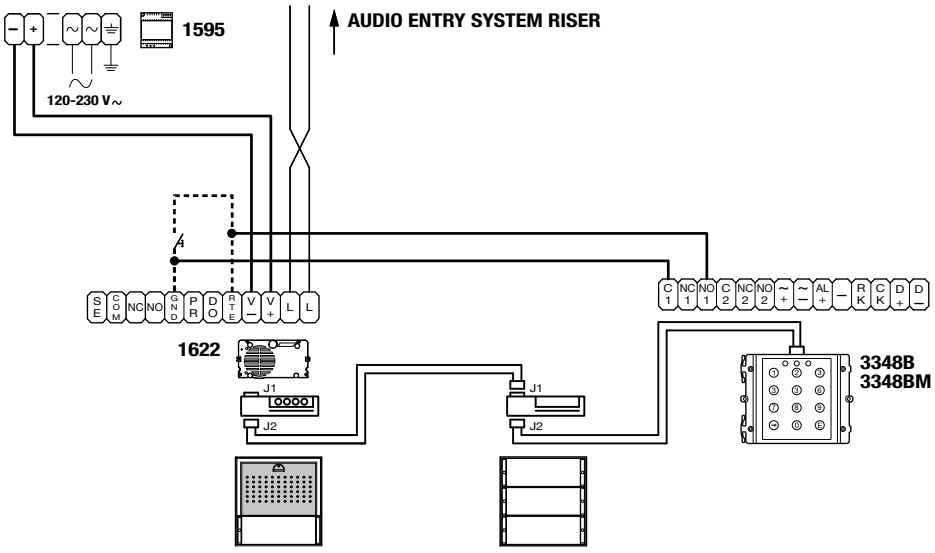

Connection Art. 3360B, 3360BM

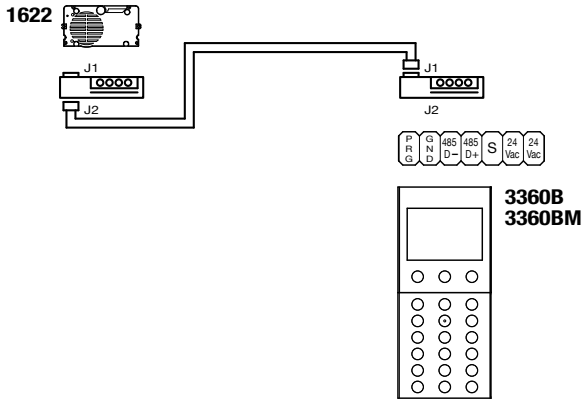

Vandalcom modules

Connection Art. 3064S

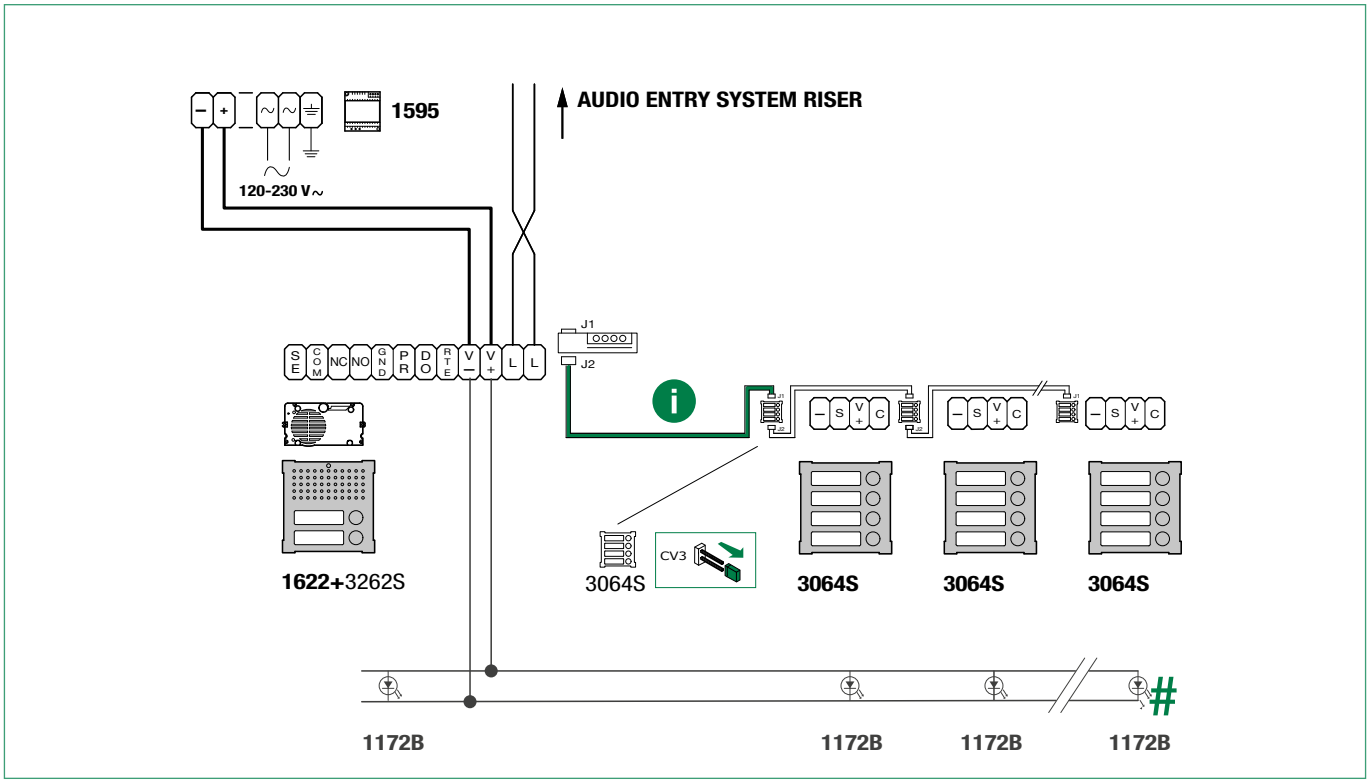

Use the cable supplied with Art. 3262S.

Use bulb Art. 1172B for nameplate lighting. The bulb is polarised.

Connection Art. 3188SB

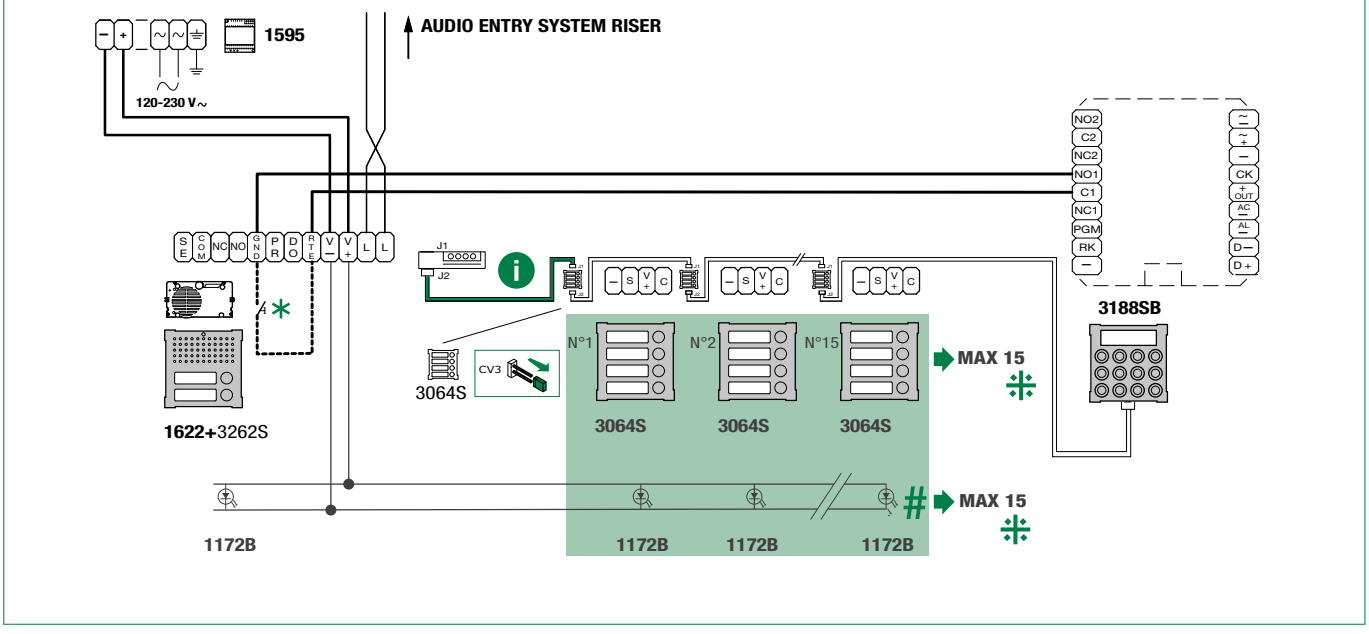

Use the cable supplied with Art. 3262S

Use bulb Art. 1172B for nameplate lighting. The bulb is polarised.

⁜ MAX 15 modules.

∗ 20m max. Local lock-release button.

Connection Art. 3070S, 3072S

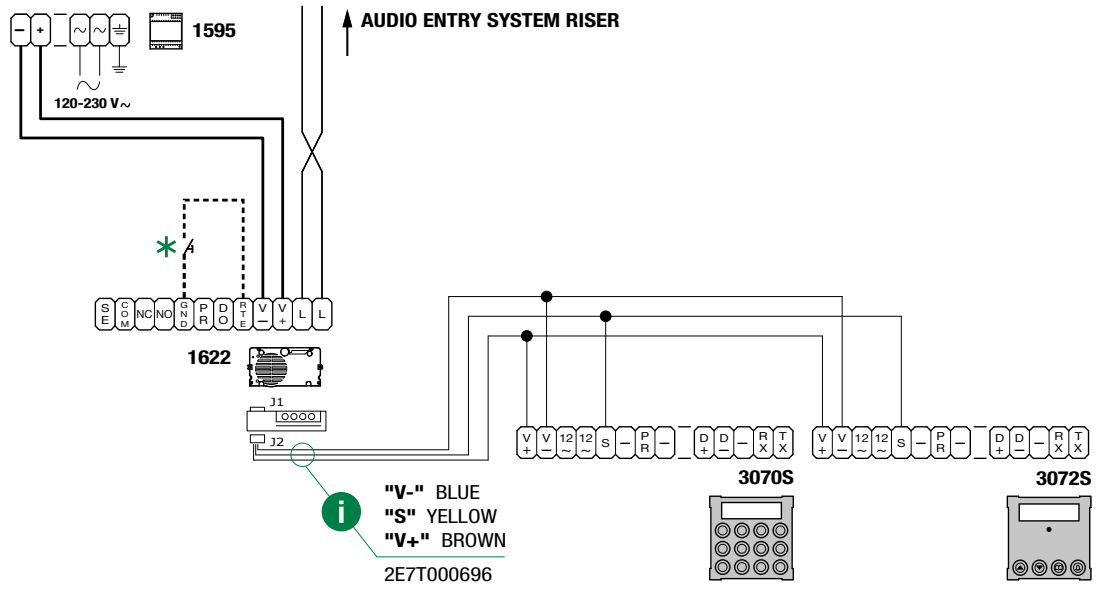

Use the cable 2E7T000696 supplied with Art. 3070S and Art. 3072S.

* 20m max. Local lock-release button.

Modules for Single-plate external unit

Connection Art. 3063D

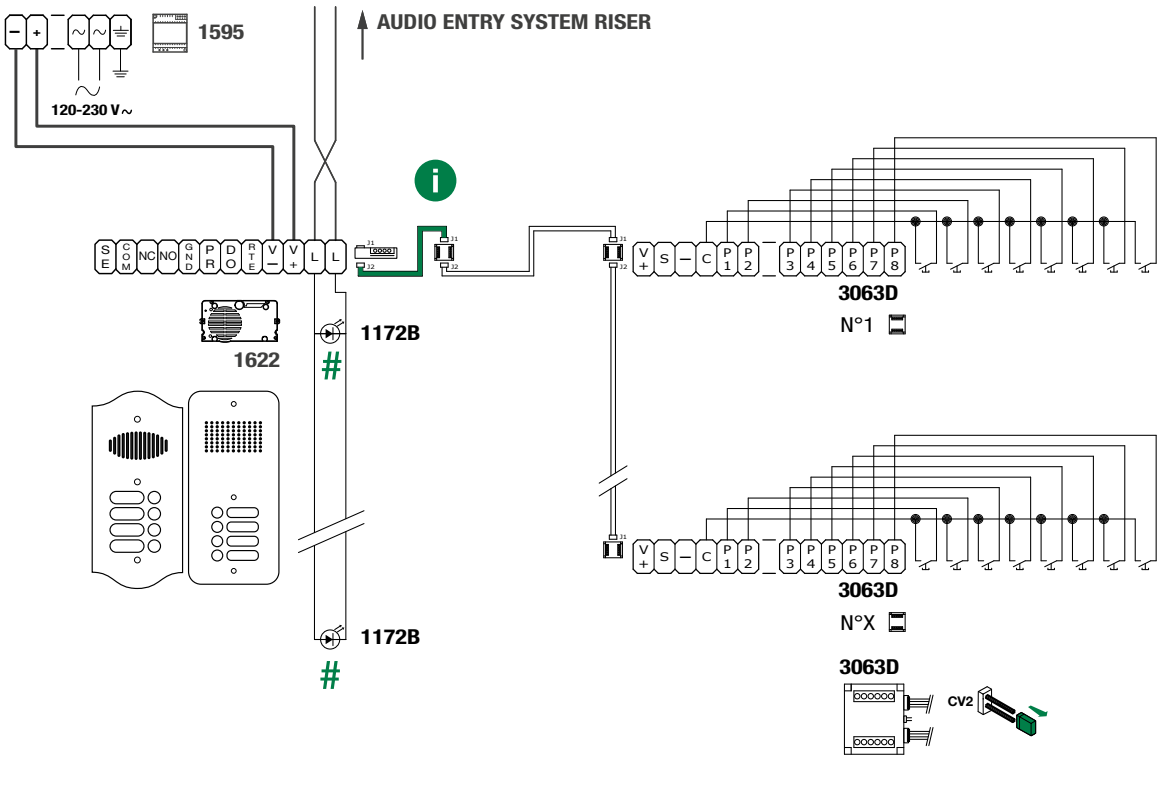

Use the cable included in Art. 1250IV, Art. 1250IA

\# Use bulb Art. 1172B for nameplate lighting. The bulb is polarised.

Button programming

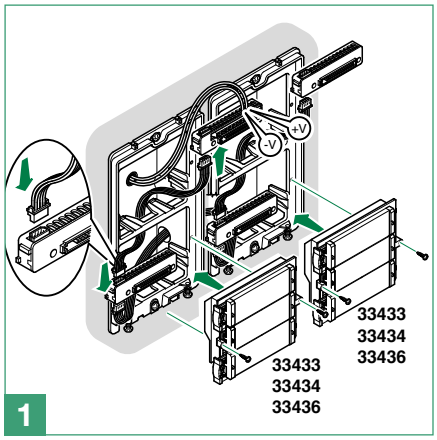

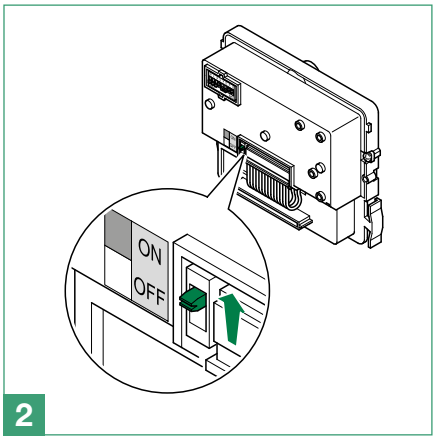

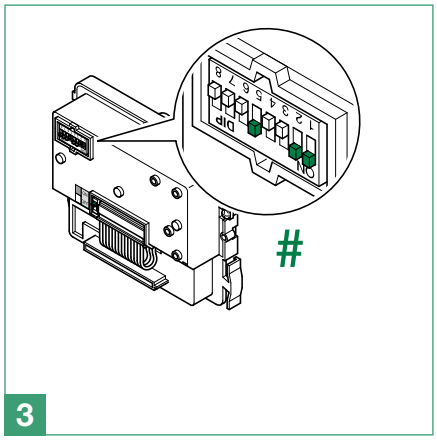

Set the user code using the dip switches; see “addressing table”.

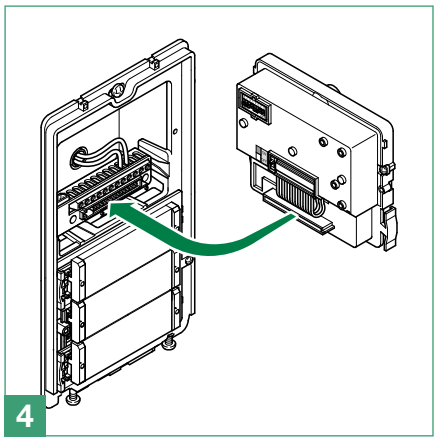

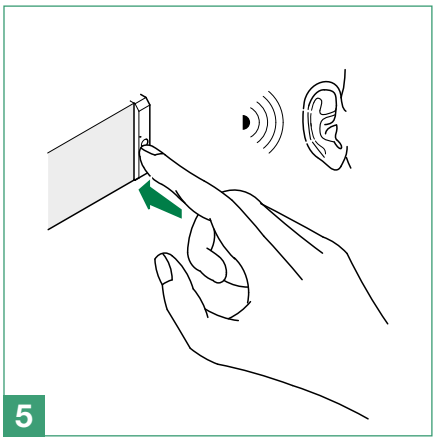

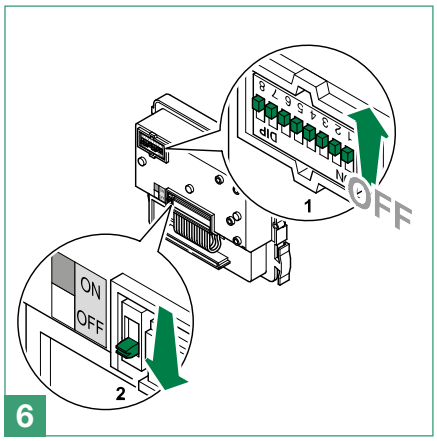

Special programmes

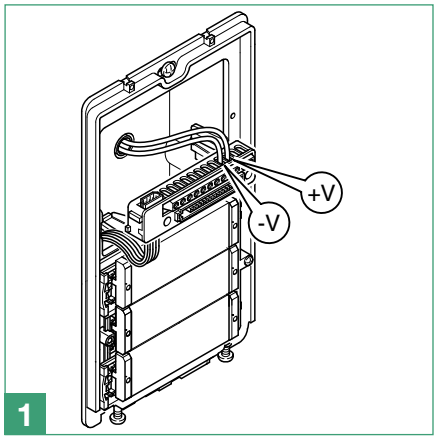

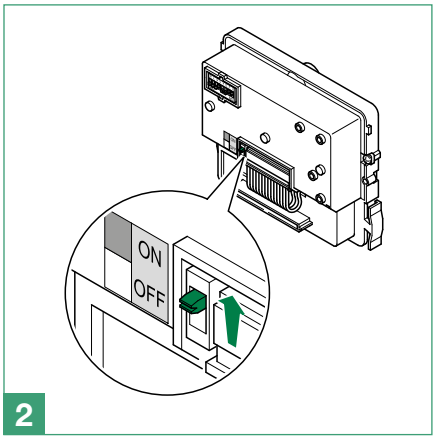

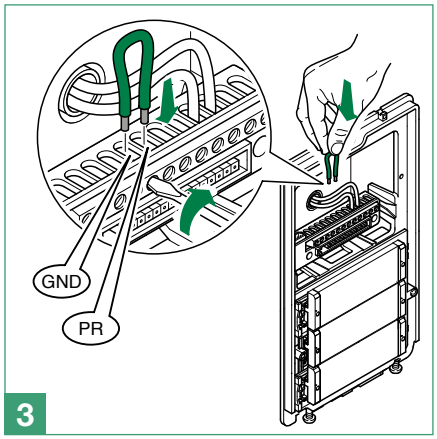

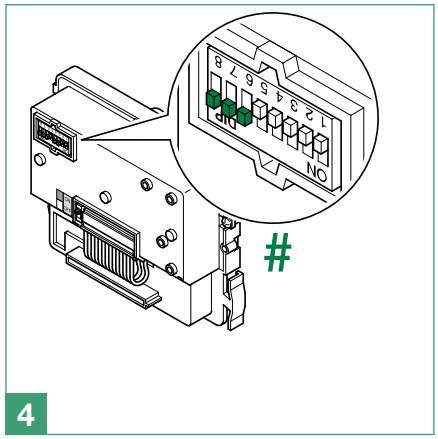

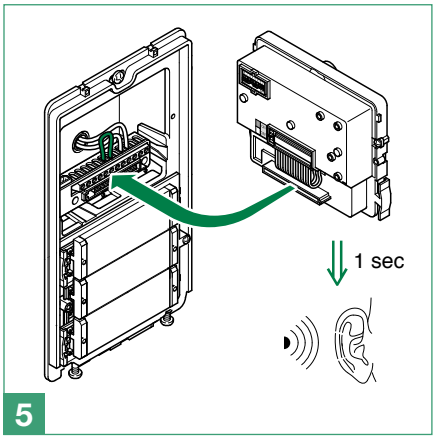

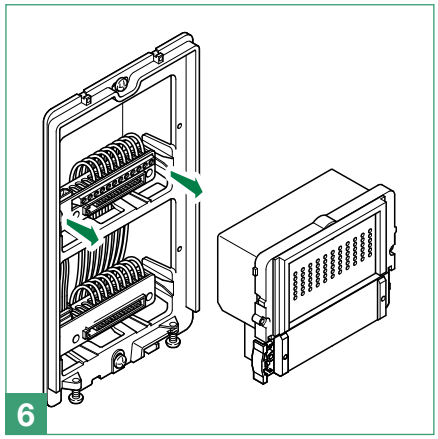

 # Set the dip switches for the function you wish to program, see the table below.

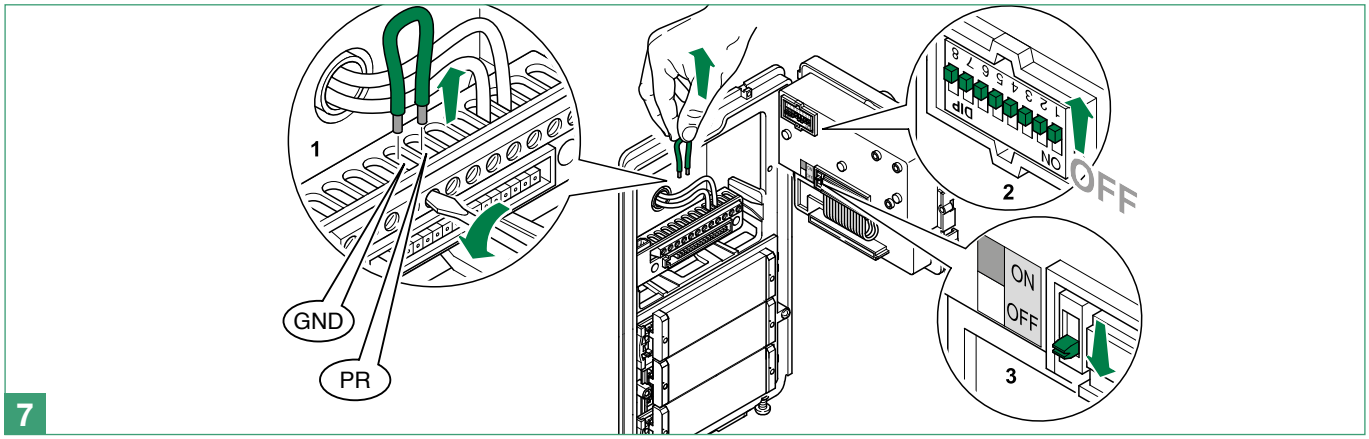

CODE	DIP SWITCH ON	FUNCTIONS
		Door lock
223	1,2,3,4,5,7,8	Door lock command on SE in AC (default)
224	6,7,8	Door lock command on SE in enhanced AC
225	1,6,7,8	Door lock command on SE in DC
245	1,3,5,6,7,8	Door lock time: 2 sec + deactivation tone (default)
246	2,3,5,6,7,8	Door lock time: 4 sec
247	1,2,3,5,6,7,8	Door lock time: 8 sec
248	4,5,6,7,8	Door lock confirmation tone: enabled
251	1,2,4,5,6,7,8	C.NC.NO relay in parallel with SE (default)
252	3,4,5,6,7,8	Lock-release always enabled (default)
253	1,3,4,5,6,7,8	Lock-release only enabled for user called
		Actuator control management **N.B. the system should not include Art. 1256 in generic actuator mode.**
229	1,3,6,7,8	Enabling C.NC.NO relay on actuator control: 2 sec
230	2,3,6,7,8	Enabling C.NC.NO relay on actuator control: 4 sec
231	1,2,3,6,7,8	Enabling C.NC.NO relay on actuator control: 8 sec
228	3,6,7,8	Actuator control on serial line S: disabled (default)
227	1,2,6,7,8	Actuator control on serial line S: enabled
		System functions
232	4,6,7,8	Awaiting response time: 60 sec (default)
233	1,4,6,7,8	Awaiting response time: 120 sec
234	2,4,6,7,8	Awaiting response time: 30 sec
235	1,2,4,6,7,8	Talk time: 90 sec (default)
236	3,4,6,7,8	Talk time: 180 sec
237	1,3,4,6,7,8	Self-ignition: enabled (default)
238	2,3,4,6,7,8	Self-ignition: disabled
239	1,2,3,4,6,7,8	Confirmation tone on user call: enabled (default)
240	5,6,7,8	Confirmation tone on user call: disabled
243	1,2,5,6,7,8	Reset wait time: 10 sec (default)
244	3,5,6,7,8	Reset wait time: 1 sec
208	5,7,8	Reset after lock-release in audio: enabled (default)
209	1,5,7,8	Reset after lock-release in audio: disabled
249	1,4,5,6,7,8	Call transmission: single (default)
250	2,4,5,6,7,8	Call transmission: triple
241	1,5,6,7,8	Control of internal units connected to Art. 1622: up to 70 (default)
242	2,5,6,7,8	Control of internal units connected to Art. 1622: from 71 to 100

		System mode
0		Simplebus (default)
255	1,2,3,4,5,6,7,8	Simplebus Top
254	2,3,4,5,6,7,8	**Restore default**

Installation information

- Module Art. 1622 normally function as a main external unit (timed busy signal). To set it as a secondary external unit (busy signal active for the whole time the riser is in use), set all the selector DIP switches to ON.
- When a call is transmitted from the external unit, if a busy tone is heard instead of the ringtone, this means communication with another external unit is in progress.

System performance and layouts

For further information of system performance and to view installation layouts, click on the system type that best meets your requirements:

- **SB1 audio system** for the creation of audio systems for *residential complexes*

Table of contents

Warning

Description 211

Technical characteristics 212

Installation 213
- Removing the monitor 214
- Removing/Fitting the terminal 214

Connections 215

Operation 215
- Answering an incoming call 215
- Activation/deactivation of *Hands-free* function 215

Touch buttons 216
- Description 216
- Indicator LED 216

Configuration 217
- Building mode, Kit mode 217
- Power management 217
- N.B. 217

Addressing table 218

Programmable buttons 219
- Legend 219
- Basic configuration 219
- Advanced configuration 220
  - Intercom calls: introduction 220
    - Selective intercom address: programming/cancellation 220
    - Button programming 221
    - Direct programming 222
  - Generic actuator, Addressable actuator: button programming 223
  - Remote camera module: button programming 224
  - Other functions 225
- Programming range 226
- Changing monitor ringtones 226
- Programming reset 227

Compatible secondary monitors 228

Art. 6741W (/BM) in systems powered by 4888C (/CU) 228
- Installation rules 228
- New coding from rev. 053 228
- Operating distances 229

Art. 6741W (/BM) in systems powered by 1210 230
- Operating distances 230

Art. 6741W (/BM) in kit systems 8451V 231
- Operating distances 231

Wiring diagrams 232
- System powered by art. 4888C / 4888CU 232
- System powered by art. 1210 233
- Kit 8451V: basic single-family system powered by art. 1209 233
- Art. 6741W (/BM) and a secondary monitor in branch connection 234
- Art. 6741W (/BM) and a 6721W (/BM) secondary monitor in cascade connection 234

System performance and layouts 235

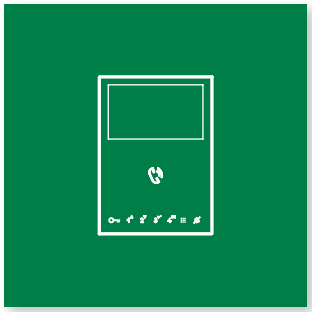

Mini Hands-free door entry monitor
Art. 6741W - Art. 6741W/BM

Description

Monitors 6741W and 6741W/BM are hands-free colour video internal units, for installation in 2-wire video entry phone systems and compatible only with power supply units 1209, 1210, 4888C and 4888CU.

The monitor, used in conjunction with the COMELIT app, makes it possible to answer calls directly from your smartphone/ tablet, whether you are at home or away.

The 6741W/BM monitor includes a magnetic induction amplification system as standard. Backplate art. 6710 is *not supplied*, and is available to purchase separately.

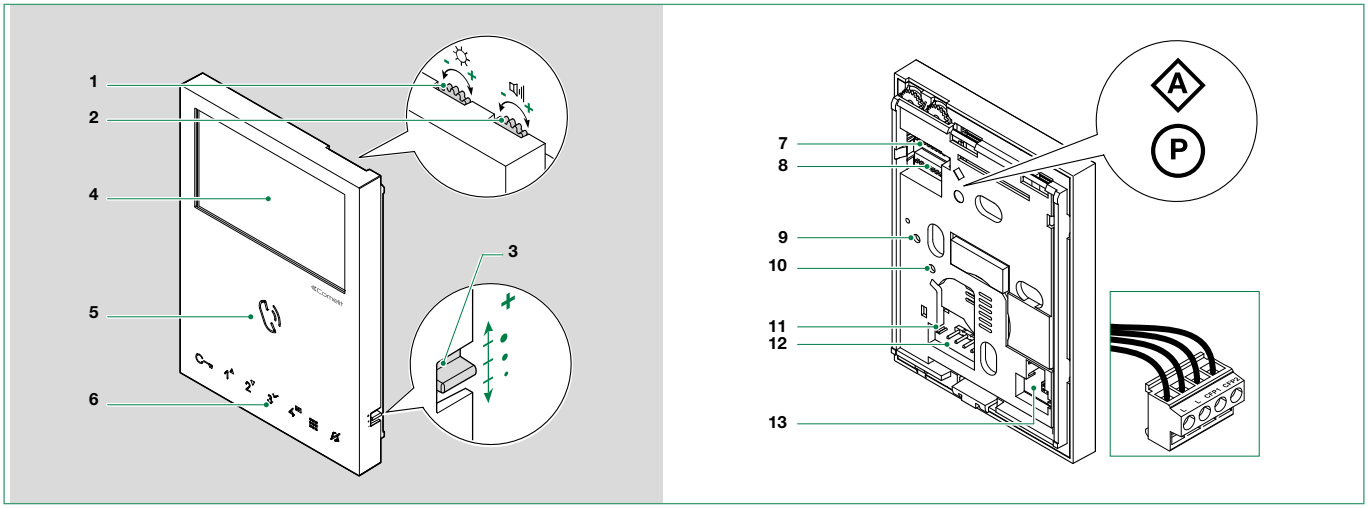

1. Brightness control

- ▶ To increase the value, turn clockwise

2. Loudspeaker volume control

- ▶ To increase the value, turn clockwise

3. Call volume adjustment (high - medium - low)

4. 4.3” LCD colour screen

5. Speaker and audio activation button

6. Touch-sensitive buttons

7. **S1** Ⓐ Microswitches for setting the user code (see **“addressing table”**)

8. **S2** Ⓟ Microswitches for programming buttons and functions

DIP 1-2-3-4 for button function programming

DIP 5-6 access to programming

DIP 7 for power supply voltage management (Paragraph **“Power management”**) default = OFF

DIP 8 *(not used)*

9.10. Factory setting - DO NOT CHANGE!

11. CV 5 Jumper for video closure

12. Pin for securing terminal block

13. S3 Microswitches:

DIP 1 to set the correct operating mode (Paragraph **“Building mode, Kit mode”)**

DIP 2 *(not used)*

Terminal block for system connection:

LL BUS line connection terminals

CFP1 CFP2 Outside door call input

Technical characteristics

MAIN FEATURES	6741W	6741W/BM
Building Kit audio/video system	Yes	Yes
SimpleBus Top audio/video system	Yes	Yes
Audio/Video Kit	Yes	Yes
Surface-mounted	Yes	Yes
Backplate supplied	Yes	No
Desk base-mounted	Yes	Yes
Hands-free	Yes	Yes
Induction loop	No	Yes
Display	LCD	LCD
Display size (inches)	4.3'' 16:9	4.3'' 16:9
OSD display	Yes	Yes
Display resolution (H x V)	480 x 272 pixel	480 x 272 pixel
B/W or colour display	Colour	Colour
Product colour	White	White
Sensitive Touch technology	Yes	Yes
Number of buttons as standard	8	8
LED indication (n)	4	4
Backlighting colour	White	White
Wi-Fi	Yes	Yes
Compatible with *Comelit* app	Yes	Yes
HARDWARE CHARACTERISTICS		
Removable terminals	Yes	Yes
ADJUSTMENTS		
Loudspeaker volume	Yes	Yes
Brightness	Yes	Yes
GENERAL DATA		
Product height (mm)	160	160
Product width (mm)	115	115
Product depth (mm)	22	22
TECHNICAL CHARACTERISTICS		
Power supply voltage	22-34 Vdc	22-34 Vdc
Absorption in standby (mA)	3–3,5 (Building mode) 45-70 (Kit mode)	3–3,5 (Building mode) 45-70 (Kit mode)
Absorption during call (mA)	150-180	150-180
Absorption during communication (mA)	250-300	250-300
IP rating	30	30
Operating temperature (°C)	+ 5/+40	+ 5/+40
Video encoding	PAL/NTSC	PAL/NTSC
Terminals	L L CFP1 CFP2	L L CFP1 CFP2
Network connection	WLan	WLan
Video resolution (H x V)	480 x 272	480 x 272

Installation



Before definitive installation of the monitors, make sure the device has good Wi-Fi signal reception; the distance between the router and monitors, and the construction materials used in the walls are factors that can affect signal quality.

The Wi-Fi signal is not strong enough to guarantee correct operation. A Wi-Fi repeater must be installed between the router and monitor in order to boost the Wi-Fi signal received by the monitor.

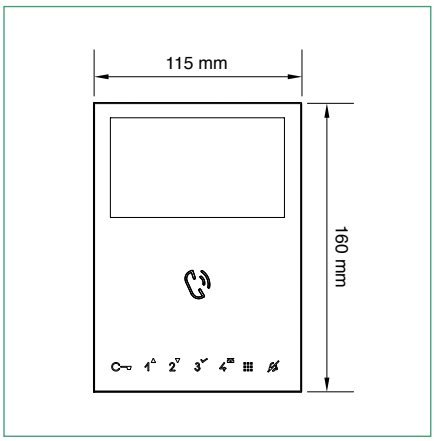

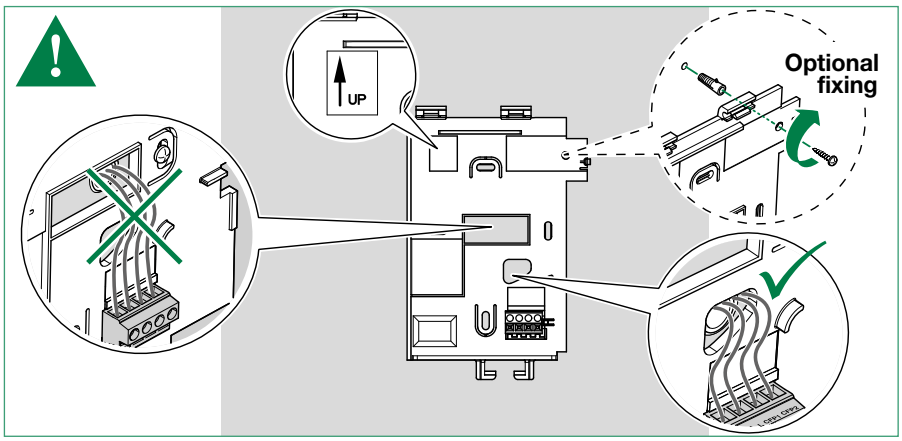

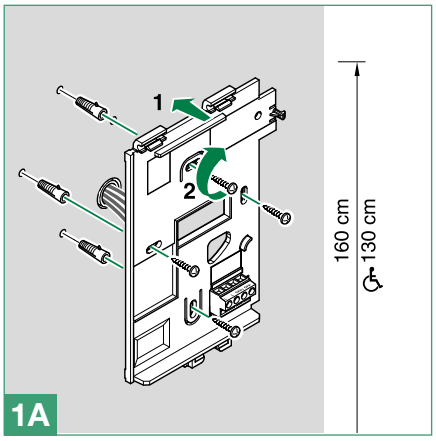

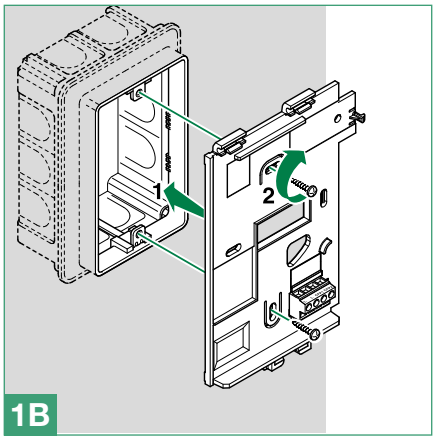

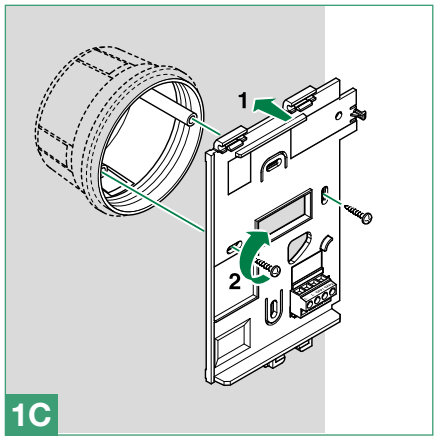

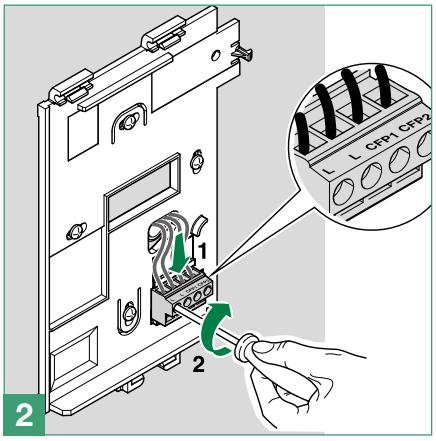

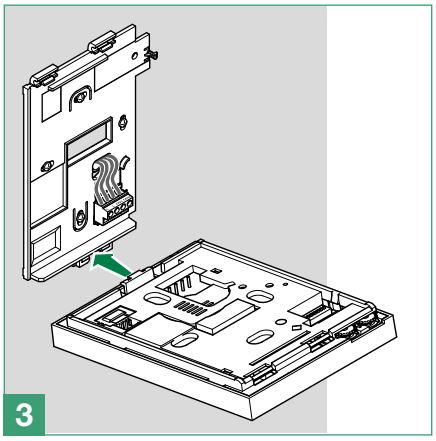

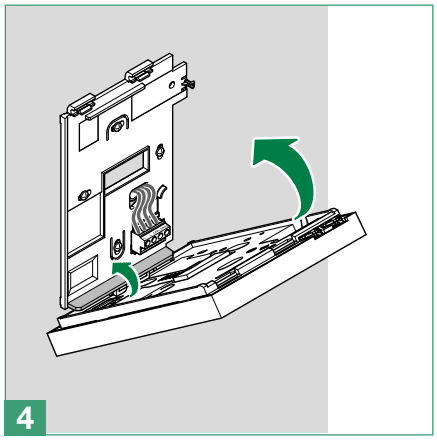

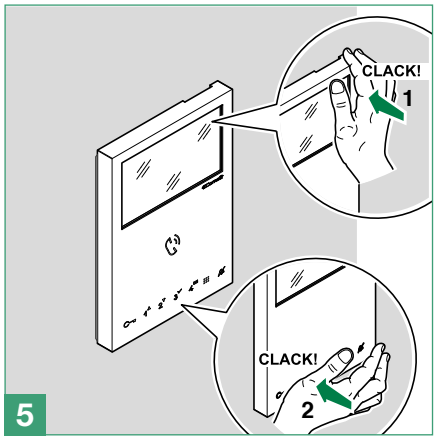

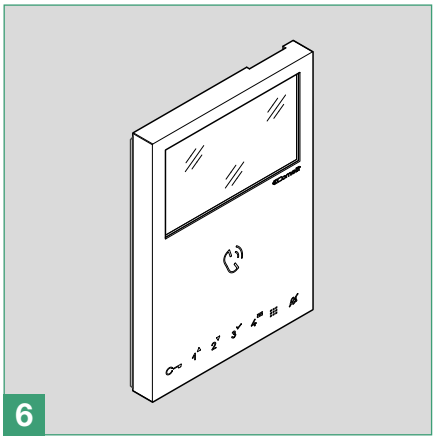

Removing the monitor

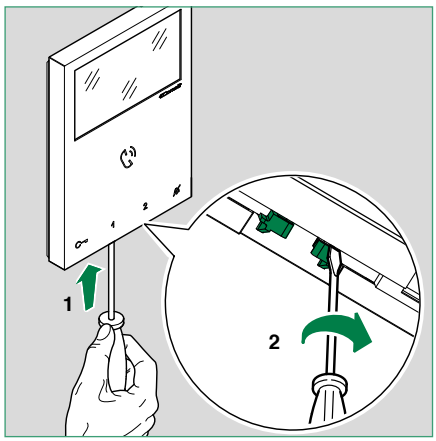

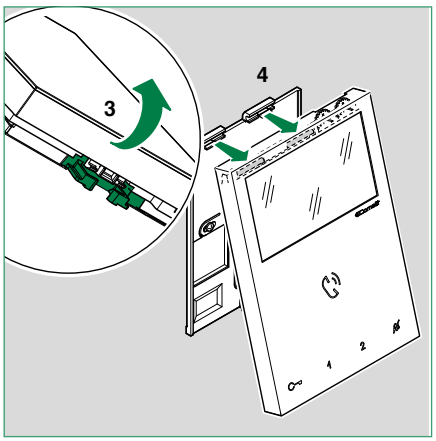

Removing/Fitting the terminal

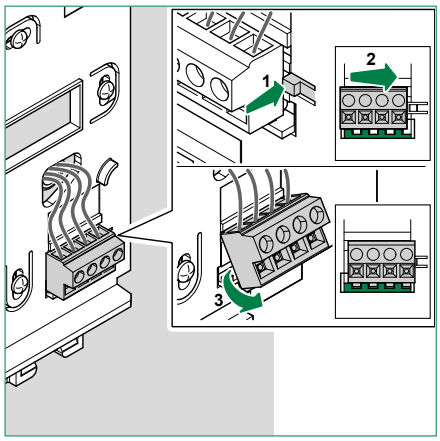

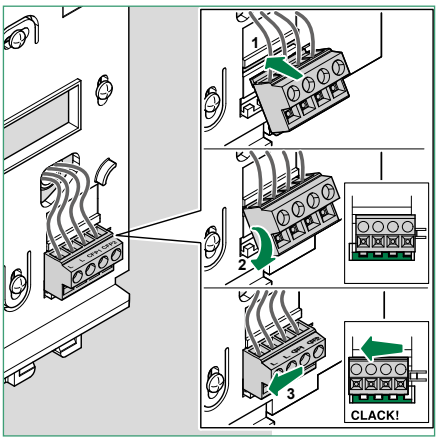

Connections

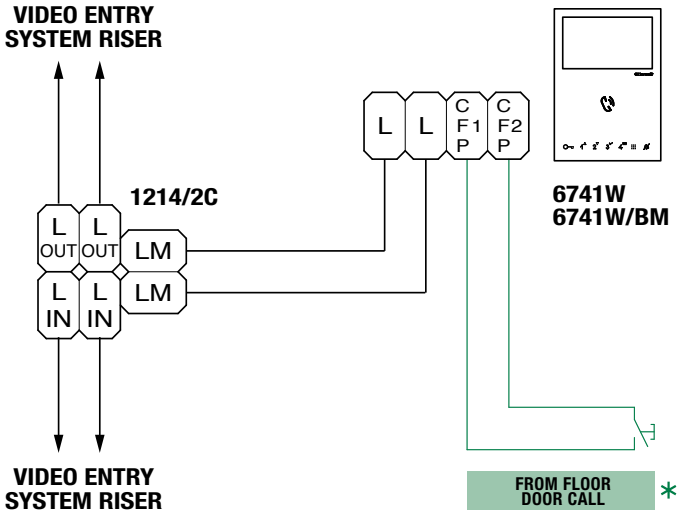

* **20 m MAX** - Use shielded cable for the connection and do not route the cables in the vicinity of heavy inductive loads or power supply cables (230V/400V).

Where multiple door-entry phones or monitor backplates have the same user code, connect the CFP button on one only; all the devices will ring simultaneously.

Operation

Once connected to the power supply, the LEDs for monitor 6741W (/BM) will flash: wait for them to turn off (approx. 40 seconds) before starting to use the device.

Answering an incoming call

Press the touch-sensitive audio activation button to answer the incoming call.

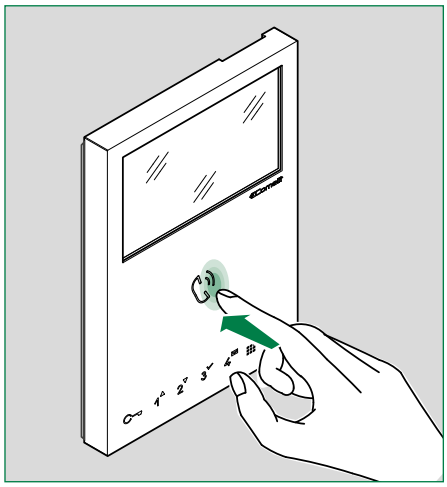

Activation/deactivation of *Hands-free* function

- ▶ Long press (5 sec) the button
  - » ACTIVATION: + LED STEADY ON
  - » DEACTIVATION: + LED OFF

Touch buttons

Description

▶ Press the desired button once to activate the function associated with it.

Wait for approx. 1 sec. before pressing the same button again; rapidly pressing the same button repeatedly will cancel the command which has just been sent.

	Audio activation	
	Door opener control	[programmable]
1	**Actuator**	[programmable]
2	**** Self-ignition**	[programmable]
3	**Secondary Switchboard**	[programmable]
4	**** Doctor mode** *Automatic door opening on receipt of call from external unit.*	[programmable]
	Menu	[not programmable]
	Privacy mode. *The ringtone will be silenced on receipt of a call from the external unit and from the switchboard..*	[not programmable]
▲▼	**Arrow keys**	
	Confirm selection	
	Message menu	

*** Long press on key to enable / disable the function.*

Indicator LED

	Audio	FLASHING LED	*Incoming call*
		STEADY LED in call	*In communication*
		STEADY LED in standby	*Hands-free function enabled*
	Lock-release	FLASHING LED	*Incoming call*
		FLASHING LED (slow)	*Door open indication*
		1 FLASH	*Door opening confirmation*
	Privacy mode	STEADY LED	*Privacy mode active*
		STEADY AND FLASHING LED (3 every 5 sec)	*Doctor and Privacy mode active*
		OFF AND FLASHING LED (3 every 5 sec)	*Doctor mode active*
		4 FLASHES	*The called device is busy*
	Menu	FLASHING LED	*User notification present*

Configuration

Building mode, Kit mode

For correct configuration, set DIP 1 of **S3** (on/off) as follows:

- **BUILDING Mode:** (S3) DIP 1= ***OFF***

✓ BUILDING mode must be set in systems powered by 4888C / 4888CU, while for systems powered by 1210, set BUILDING mode when the number of 6741W (/BM) monitors is greater than 10.

In this mode you can answer video entry phone calls at home and away from your smartphone/tablet.

- **Kit Mode**: (S3) DIP 1= ***ON***

✓ KIT mode is permitted in systems powered by 1210 with 10 ***or fewer*** internal units, and in systems powered by 1209 with 4 ***or fewer*** 6741W (/BM) units.

In this mode you can answer video entry phone calls at home and away from your smartphone/tablet, but also implement self-ignition and control actuators.

QTY	art. 4888C / 4888CU	art. 1210	art. 1209
art. 6741W (/BM) **< 10**	S3  ***OFF***	S3  ***ON***	S3  ***ON*** (art. 6741W (/BM) **MAX 4**)
art. 6741W (/BM) **> 10**	S3  ***OFF***	S3  ***OFF***	-

Power management

For correct power supply management, main monitor Ⓟ and secondary monitor Ⓢ **DIP 7** of **S2** should be set in accordance with the table (see below) and in accordance with the type of system and its configuration:

art. 4888C / 4888CU	art. 1210	art. 1209
S2 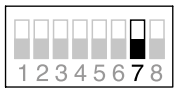 ***OFF***	S2 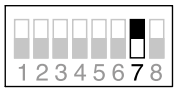 ***ON***	S2  ***ON***

N.B.

A single 6741W monitor can be installed for each user code; this will also be the only main monitor.

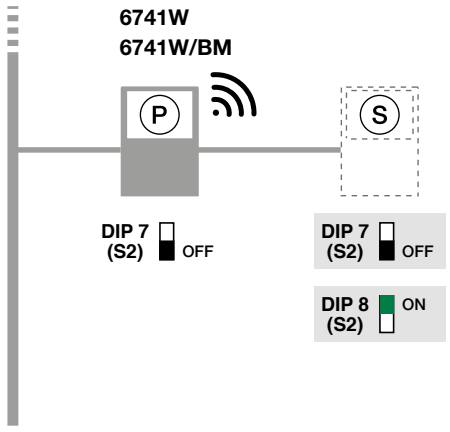

4888C / 4888CU

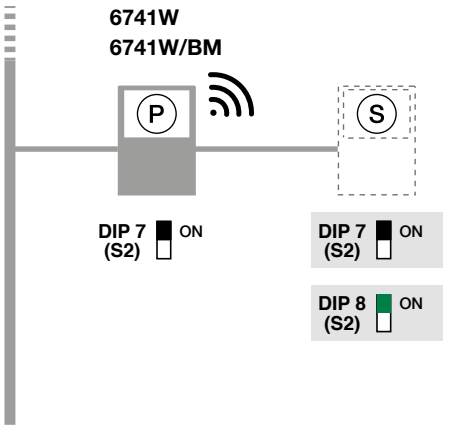

1210 / 1209

Addressing table

See **“addressing table”**

NOTES

- In BUILDING mode we recommend choosing user codes with free lower values.
- Code *240 is reserved for the porter switchboard.

Programmable buttons

	Legend
	Audio
C	Lock-release
ACT	Actuator
AI	Self-ignition
CAMG	Remote camera module with generic address
CAM1	Remote camera module with address 220
CAM2	Remote camera module with address 221
CCP	Call to main switchboard
CCS	Call to secondary switchboard
INT	General or selective programmable intercom. *Default: single-family call*
INTb	General or selective programmable intercom. *Default: two-family call*
K	Caretaker door-entry phone call
D	Doctor
PAN	Panic
NULL	No function
PROG.	**Programmed functions, see "Advanced configuration".** **In this DIP-switch setting, the buttons control the programmed functions; the NON-programmed buttons control the functions referred to on line 0000 (default).**

Basic configuration

S2				▶	BUTTON PROGRAMMING					
DIP 1	DIP 2	DIP 3	DIP 4			C	1	2	3	4
0	0	0	0		Audio	Lock-release	ACT	AI	CCS	D
1	0	0	0				CCS	AI	INT	INTb
0	1	0	0				INT	AI	INTb	ACT
1	1	0	0				ACT	CCS	CCP	PAN
0	0	1	0			ACT	ACT	ACT	ACT	ACT
1	0	1	0			Lock-release	INT	ACT	CCS	CCP
0	1	1	0				AI	D	K	CCS
1	1	1	0				INTb	INT	AI	INT
0	0	0	1				CCS	PAN	D	AI
1	0	0	1				K	CCS	PAN	CCP
0	1	0	1				CCP	K	PAN	ACT
1	1	0	1				AI	CAMG	CAM1	CAM2
0	0	1	1				INTb	AI	INT	ACT
1	0	1	1				INT	INT	INT	INT
0	1	1	1		NULL					
1	1	1	1		PROG.					

** Default*

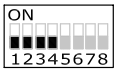

Advanced configuration

If the default settings (table **"Basic configuration"**) do not reflect requirements, the buttons can be programmed differently by carrying out the steps below.

After programming, set S2 DIP switches 1-2-3-4 to the combination 1111 (PROG setting). With these DIP-switch settings, the buttons control the programmed functions.

The NON-programmed buttons control the basic configuration functions 0000 (see "Basic configuration").

To restore the user code setting on S1, see "addressing table"

Intercom calls: introduction

General intercom: call from one *internal unit* to one or more *internal units* identified by the call address used by the external unit.

Selective intercom: call from an *internal unit* to one or more *internal units* identified by a dedicated address *(see* **table B***)* which is different from the call addressed used by the external unit.

General and selective intercoms CANNOT be used together on the same riser.

Selective intercom address: programming/cancellation

Take note of the S2, S1 settings and restore on completion of programming

1)	2)	3)	
Programming; set code, TABLE B **S1** 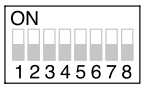	**S2 DIP** 1 2 3 4 5 6 0 0 0 1 1 1 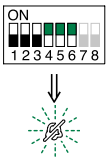	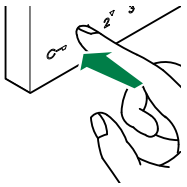	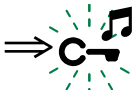
Cancellation **DIP ON** **S1** 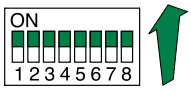	**S2 DIP** 1 2 3 4 5 6 1 1 1 1 1 1 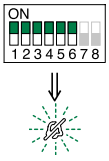	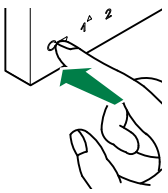	

Selective intercom addresses

You must set the intercom address on all the riser's internal units.
You can assign the same intercom address to a maximum of 3 internal units.
For group calls, select the desired intercom codes simultaneously (max. 3).

TABLE B

Code	DIP switch ON	S1	Code	DIP switch ON	S1
1	1		5	5	
2	2		6	6	
3	3		7	7	
4	4		8	8	

Button programming

1. To enter programming mode, set S2 **DIP switch 6** to combination 1

» *the Privacy LED flashes*

S2 DIP						S2	ON 1 2 3 4 5 6 7 8	⇒	
1	2	3	4	5	6				
0	0	0	0	0	1				

2. Refer to the table **"Basic configuration"** and select a combination in which the intercom function is listed for the buttons you wish to program.

Example

S2				▶	BUTTON PROGRAMMING			
DIP 1	**DIP 2**	**DIP 3**	**DIP 4**		1	2	3	4
1	0	1	1		**INT**	**INT**	**INT**	**INT**

General intercom

Example programming of button **1** *single-family general intercom,* and button **2** *general intercom to address 9*, of a device with user code **5**.
(Button 1 = INT) Set S2 DIP switches 1-2-3-4 to the combination ***1 0 1 1***, set S1 with address 5 in accordance with the **"addressing table"**. Proceed with programming from point 3.
(Button 2 = INT) Set S2 DIP switches 1-2-3-4 to the combination ***1 0 1 1,*** set S1 with *address 9* in accordance with the **"addressing table" .** Proceed with programming from point 3.

Selective intercom

Example programming of button **1** *selective intercom* to address 2 and button **2** *selective intercom* to address 3, of a device with user code 1 and intercom address 1.
(Button 1 = INT) Set S2 DIP switches 1-2-3-4 to the combination ***1 0 1 1***, set S1 with address 2 in accordance with **"TABLE B".** Proceed with programming from point 3.
(Button 2 = INT) Set S2 DIP switches 1-2-3-4 to the combination ***1 0 1 1***, set S1 with *address 3* in accordance with **"TABLE B".** Proceed with programming from point 3.

The NON-programmed buttons control the basic configuration functions 0000.

3. Press and release the button to be associated with the function

» *Correct procedure indication*: the *Lock release* LED flashes for a few seconds and a confirmation tone sounds

» *Procedure error indication:* the *Audio* LED flashes for few seconds and an error tone sounds

4. To exit programming mode, set S2 **DIP switch 6** to the combination 0

» *the Privacy LED switches off*

5. After programming, set S2 DIP switches 1-2-3-4 to the combination 1111. Restore the user code setting on S1, see the "addressing table".

Direct programming

Allows direct programming of intercom call via the internal units.

✓ Requires 2 operators

Step 1: enter programming mode

Operator 1 and Operator 2 carry out the following procedures on 2 internal units:

1. Set S2 DIP switches 1-2-3-4 to the combination 1111
2. Press and hold the Privacy and Lock-release buttons for 3 sec.
   - » The internal unit emits 1 tone
   - » The Privacy LED flashes
   - » The internal unit enters audio mode

At this point the 2 operators are in communication with each other.

Step 2: intercom call programming

Operator 1:

▶ Press the button you want to program to call operator 2 (e.g. 2).

» Wait for a few seconds, until you hear the programming confirmation tone.

Operator 2:

▶ Press the button you want to program to call operator 1 (e.g. 1).

» Wait for a few seconds, until you hear the programming confirmation tone.

Operator 1/Operator 2:

▶ Press the Audio button

» The internal unit emits 1 tone

Programming of the 2 internal units is now complete.



If a call is received during programming, it must be answered and the programming procedure resumed afterwards.

Generic actuator, Addressable actuator: button programming

Take note of the DIP-switch settings.

1. To enter programming mode, set S2 **DIP switch 6** to combination 1

» *the Privacy LED flashes*

S2 DIP						S2	ON	⇒	
1	2	3	4	5	6		1 2 3 4 5 6 7 8		
0	0	0	0	0	1				

2. Refer to the table **"Basic configuration"** and select a combination in which the actuator function (ACT) is listed for the buttons you wish to program.

Example

S2				▶	BUTTON PROGRAMMING				
DIP 1	**DIP 2**	**DIP 3**	**DIP 4**		C⊸	1	2	3	4
0	0	1	0		**ACT**	**ACT**	**ACT**	**ACT**	**ACT**

Example programming of button **1** *generic actuator,* and button **2** *addressable actuator* to code 125
(Button 1 = ACT) Set S2 DIP switches 1-2-3-4 to the combination ***0 0 1 0,*** Set S1 DIP-switches to the combination 11111111.
(Button 2 = ACT) Set S2 DIP switches 1-2-3-4 to the combination ***0 0 1 0***, set S1 with address 125 in accordance with **"addressing table".**

The NON-programmed buttons control the functions "Basic configuration" 0000.

3. Press and release the button to be associated with the function

» *Correct procedure indication*: the *Lock release* LED flashes for a few seconds and a confirmation tone sounds

» *Procedure error indication:* the *Audio* LED flashes for few seconds and an error tone sounds

4. To exit programming mode, set S2 DIP switch 6 to the combination 0

» *the Privacy LED switches off*

5. After programming, set S2 DIP switches 1-2-3-4 to the combination 1111. Restore the user code setting on S1, see the "addressing table".

Remote camera module: button programming

Take note of the DIP-switch settings.

1. To enter programming mode, set S2 **DIP switch 6** to combination 1

» *the Privacy LED flashes*

S2 DIP						S2	ON								
1	2	3	4	5	6		1	2	3	4	5	6	7	8	⇒
0	0	0	0	0	1										

2. Refer to the table **"Basic configuration"** and select a combination in which the Camera function (CAM) is listed for the buttons you wish to program.

Example

S2				▶	BUTTON PROGRAMMING				
DIP 1	**DIP 2**	**DIP 3**	**DIP 4**		C⊸	1	2	3	4
1	1	0	1		**Lock-release**	**AI**	**CAMG**	**CAM1**	**CAM2**

Example programming of button **2** *Remote camera module with generic address,* and button **3** *Remote camera module with address* 220
(Button 2 **= CAMG)** Set S2 DIP switches 1-2-3-4 to the combination ***1 1 0 1,*** Set S1 DIP-switches to the combination 11111111.
(Button 3 **= CAM1)** Set S2 DIP switches 1-2-3-4 to the combination ***1 1 0 1***, set S1 with address 220 in accordance with the **"addressing table".**

The NON-programmed buttons control the functions "Basic configuration" 0000.

3. Press and release the button to be associated with the function

» *Correct procedure indication*: the *Lock release* LED flashes for a few seconds and a confirmation tone sounds

» *Procedure error indication:* the *Audio* LED flashes for few seconds and an error tone sounds

4. To exit programming mode, set S2 DIP switch 6 to the combination 0

» *the Privacy LED switches off*

5. After programming, set S2 DIP switches 1-2-3-4 to the combination 1111. Restore the user code setting on S1, see the "addressing table".

Other functions

1. To enter programming mode, set S2 **DIP switch 6** to combination 1

» *the Privacy LED flashes*

S2 DIP						
1	2	3	4	5	6	**S2**
0	0	0	0	0	1	

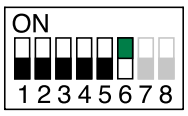

2. Refer to the table and select a combination in which the desired/necessary functions are listed for the buttons you wish to program.

S2				BUTTON PROGRAMMING			
DIP 1	**DIP 2**	**DIP 3**	**DIP 4**	1	2	3	4
0	0	0	0		**AI**	**CCS**	**D**
1	0	0	0	**CCS**	**AI**		
0	1	0	0		**AI**		
1	1	0	0		**CCS**	**CCP**	**PAN**
0	0	1	0				
1	0	1	0			**CCS**	**CCP**
0	1	1	0	**AI**	**D**	**K**	**CCS**
1	1	1	0			**AI**	
0	0	0	1	**CCS**	**PAN**	**D**	**AI**
1	0	0	1	**K**	**CCS**	**PAN**	**CCP**
0	1	0	1	**CCP**	**K**	**PAN**	
1	1	0	1	**AI**	**CAMG**	**CAM1**	**CAM2**
0	0	1	1		**AI**		
1	0	1	1				
0	1	1	1	**NULL**			

Example programming of button **1** *Call to secondary switchboard* and button **2** *Panic*.

(Button 1 = CCS, Button 2 = PAN) Set S2 DIP switches 1-2-3-4 to the combination ***0 0 0 1***.

The NON-programmed buttons control the functions "Basic configuration" 0000.

3. Press and release the buttons to which you wish to assign the functions

» *Correct procedure indication*: the *Lock release* LED flashes for a few seconds and a confirmation tone sounds

» *Procedure error indication:* the *Audio* LED flashes for few seconds and an error tone sounds

4. To exit programming mode, set S2 DIP switch 6 to the combination 0

» *the Privacy LED switches off*

5. After programming, set S2 DIP switches 1-2-3-4 to the combination 1111.

Programming range

Take note of the S2, S1 settings and restore on completion of programming

Carry out steps 1 to 4

	1)	2)	3)		4)
Range minimum address	S1 ON 1 2 3 4 5 6 7 8 Set code, "addressing table"	S2 DIP 1 2 3 4 5 6 / 0 0 0 0 1 0 S2 ON 1 2 3 4 5 6 7 8	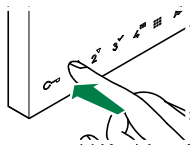		
Range maximum address			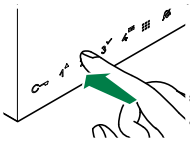		
Enable range			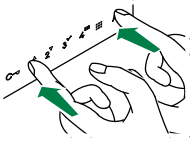		S2 ON 1 2 3 4 5 6 7 8
Disable range			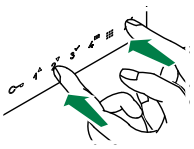		
Deleting the range	DIP ON S1 ON 1 2 3 4 5 6 7 8	S2 DIP 1 2 3 4 5 6 / 1 1 1 1 1 0 S2 ON 1 2 3 4 5 6 7 8	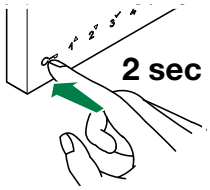		

Changing monitor ringtones

1. Press and hold C for 6 sec.
   - » a confirmation tone will sound
   - » the Privacy LED will flash to indicate "programming" mode.

✓ the procedure can only take place while the system is in standby; otherwise the Privacy LED will flash 4 times to inform the user that the system is engaged.

2. Press and release C

   Once (1 confirmation tone is emitted) to change the ringtone for calls from the external unit.

   Twice (2 confirmation tones emitted) to change the switchboard call tone

   3 times (3 confirmation tones are emitted) to change the ringtone for intercom calls made from the internal unit.

   4 times (4 confirmation tones are emitted) to change the floor door call ringtone.

   Any further presses of button C will repeat the sequence described above.

3. Press and release 1 to scroll through the various available ringtones in sequence.
4. Press 2 to confirm selection of the last ringtone heard and to exit change monitor ringtone mode.
   - » one confirmation tone is emitted
   - » the Privacy LED switches off

Repeat steps 1 to 4 to change the other ringtones.

Programming reset

Factory settings:

- Button functions for the S2 DIP switches 1-2-3-4 combination;
- Intercom address absent;
- Range function and min./max. addresses absent;
- Ringtone reset.

Take note of the S2, S1 settings and restore on completion of programming

1)	2)	3)
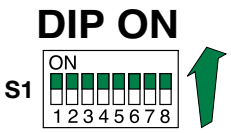	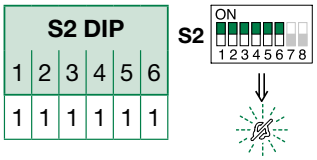	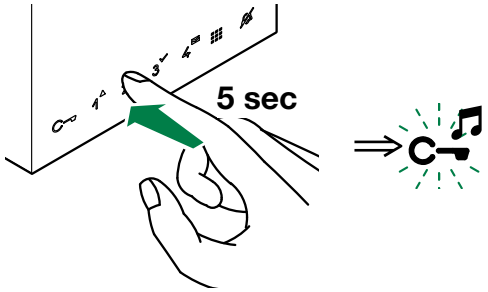

Compatible secondary monitors

	6601W **6601W/BM**	**6700W**	**6701W** **6701W/BM**	**6721W** **6721W/BM**	**6801W** **6801W/BM**

Art. 6741W (/BM) in systems powered by 4888C (/CU)

Maximum number of riser-powered main internal units with the same user code	**1**
Call repetition devices that can be used	**1229A**
Maximum number of internal units (including call repetition devices) with the same user code	**4**
Maximum number of internal units that can be powered from art. 4888C / 4888CU	**100**

Installation rules

- In systems powered by 4888C (4888CU) with a revision index greater than or equal to **053** (**014**)**,** up to 100 monitors can be installed.
- In systems powered by 4888C with a revision index between **052** and **021**, up to 50 monitors can be installed.
- Power supply units 4888C (4888CU) with a revision index prior to **021** (**014**) *are not compatible* for use with 6741W (/BM), and should therefore be replaced.



Serial number.

The first 3 digits correspond to the revision index.

New coding from rev. 053

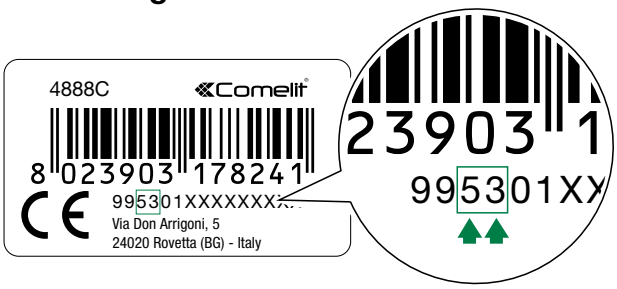

New coding.

The third and fourth digits correspond to the revision index.

Operating distances

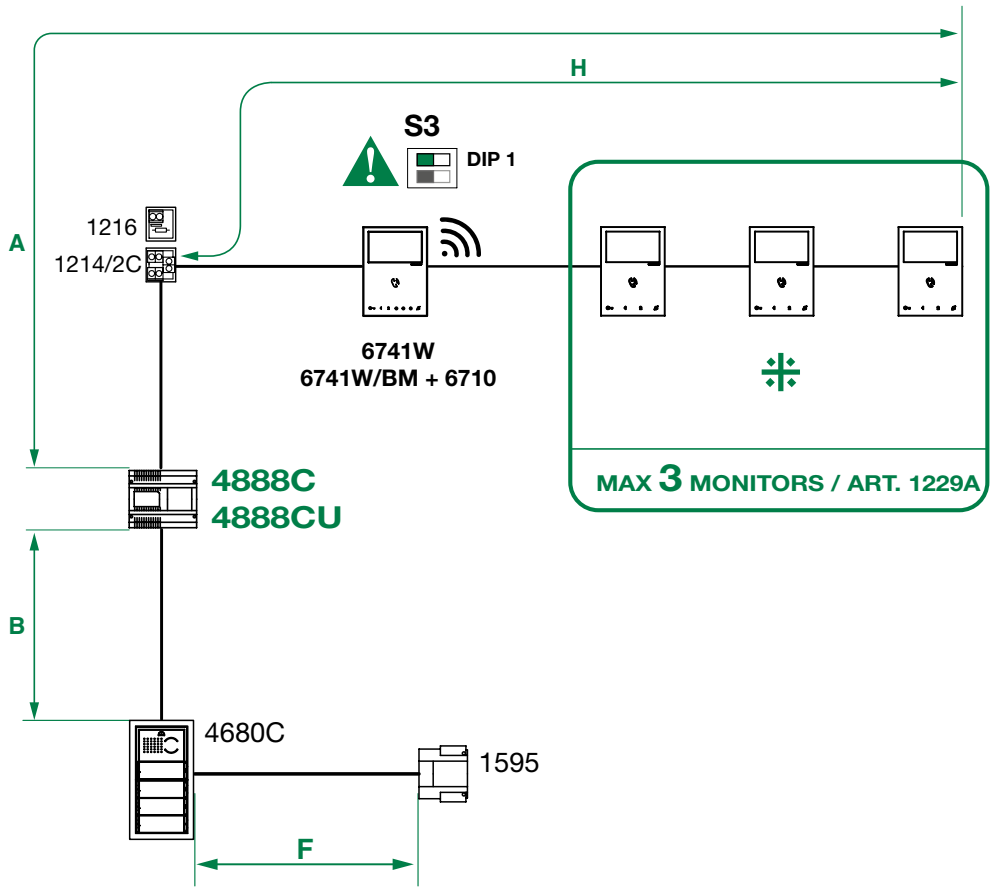

	A max	B max	F max	H max
Comelit art. 4577/4579 1 mm2 (Ø 1.2 mm AWG 17)	200 m (655 feet)	200 m (655 feet)	50 m (165 feet)	100 m (330 feet)
UTP5 cat. 5 0.2 mm2 (Ø 0.5 mm AWG 24)	80 m (260 feet)	150 m (490 feet)		60 m (195 feet)
0.28 mm2 (Ø 0.6 mm AWG 23)	100 m (330 feet)	150 m (490 feet)	5 m (15 feet)	60 m (195 feet)
0.5 mm2 (Ø 0.8 mm AWG 20)	120 m (395 feet)	100 m (330 feet)	25 m (85 feet)	60 m (195 feet)
1 mm2 (Ø 1.2 mm AWG 17)	120 m (395 feet)	150 m (490 feet)	50 m (165 feet)	60 m (195 feet)
1 mm2 (Ø 1,2 mm AWG 17)	120 m (395 feet)	80 m (260 feet)	50 m (165 feet)	40 m (130 feet)
1,5 mm2 (Ø 1,4 mm AWG 15)	150 m (490 feet)	100 m (330 feet)	75 m (245 feet)	60 m (195 feet)
2,5 mm2 (Ø 1,8 mm AWG 13)	150 m (490 feet)	100 m (330 feet)	100 m (330 feet)	60 m (195 feet)

Art. 6741W (/BM) in systems powered by 1210

Max. number of riser-powered main internal units with the same user code	**1**
Call repetition devices that can be used	**1229A**
Maximum number of internal units (including call repetition devices) with the same user code	**(2) 4**
Maximum number of internal units that can be powered from art. 1210	**100**

Operating distances

KIT MODE: MAX 10 MONITORS / ART. 1229A

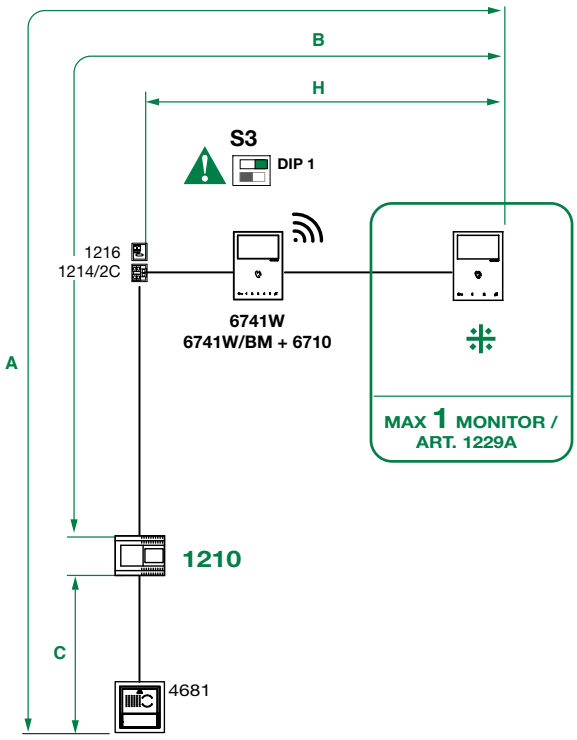

BUILDING MODE: MAX 100 MONITORS / ART. 1229A

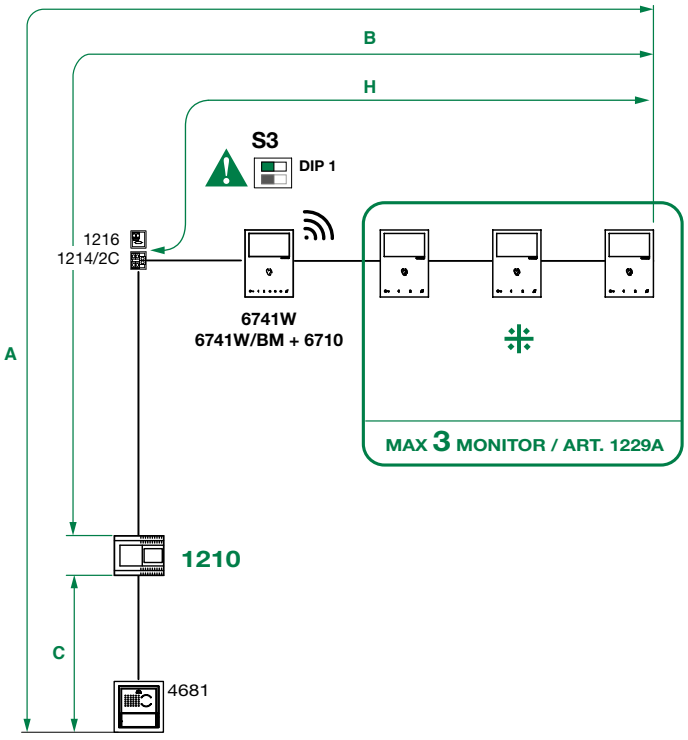

	A max	**B** max	**C** max	**H** max
Comelit art. 4577/4579 1 mm2 (Ø 1.2 mm AWG 17)	260 (850 feet)	130 (425 feet)	130 (425 feet)	50 (164 feet)
UTP5 cat. 5 0.2 mm2 (Ø 0.5 mm AWG 24)	80 (260 feet)	40 (130 feet)	40 (130 feet)	30 (98 feet)
0.28 mm2 (Ø 0.6 mm AWG 23)	100 (328 feet)	50 (164 feet)	50 (164 feet)	30 (98 feet)
0.5 mm2 (Ø 0.8 mm AWG 20)	140 (460 feet)	70 (230 feet)	70 (230 feet)	30 (98 feet)
1 mm2 (Ø 1.2 mm AWG 17)	200 (656 feet)	100 (328 feet)	100 (328 feet)	40 (130 feet)
1.5 mm2 (Ø 1.4 mm AWG 15)	80 (260 feet)	40 (130 feet)	40 (130 feet)	30 (98 feet)
*UTP5 cat. 5 0.2 mm2 (Ø 0.5 mm AWG 24) MULTI PAIR CABLE 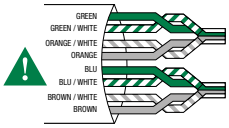	260 (850 feet)	130 (425 feet)	130 (425 feet)	50 (164 feet)

UTP cable with multi-cable connection: FOLLOW THE COLOURS SHOWN IN THE DIAGRAM!

Art. 6741W (/BM) in kit systems 8451V

Maximum number of riser-powered main internal units with the same user code	**1**
Call repetition devices that can be used	**1229A**
Maximum number of internal units (including call repetition devices) with the same user code	**4**
Maximum number of internal units that can be powered from art. 1209	**16**

Operating distances

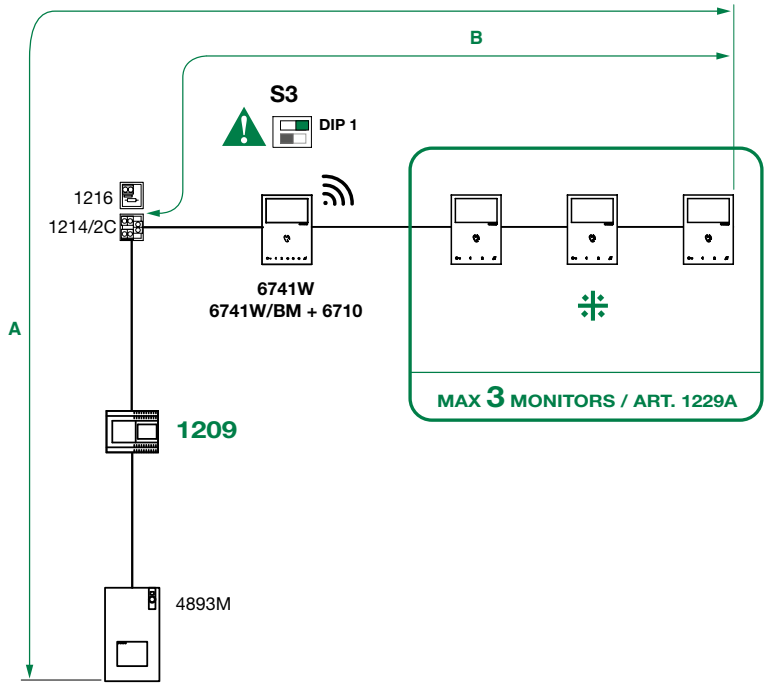

	A max	**B** max
Comelit Art. 4577/4579 1 mm2 (Ø 1.2 mm AWG 17)	200 m (655 feet)	100 m (330 feet)
UTP5 cat. 5 0.2 mm2 (Ø 0.5 mm AWG 24)	100 m (330 feet)	60 m (195 feet)
0.28 mm2 (Ø 0.6 mm AWG 23)	100 m (330 feet)	60 m (195 feet)
0.5 mm2 (Ø 0.8 mm AWG 20)	100 m (330 feet)	60 m (195 feet)
1 mm2 (Ø 1.2 mm AWG 17)	100 m (330 feet)	60 m (195 feet)
1 mm2 (Ø 1.2 mm AWG 17)	80 m (260 feet)	40 m (130 feet)
1.5 mm2 (Ø 1.4 mm AWG 15)	100 m (330 feet)	60 m (195 feet)
*UTP5 cat. 5 0.2 mm2 (Ø 0.5 mm AWG 24) MULTI PAIR CABLE	200 m (655 feet)	70 m (230 feet)

UTP cable with multi-cable connection: FOLLOW THE COLOURS SHOWN IN THE DIAGRAM!

Wiring diagrams

System powered by art. 4888C / 4888CU

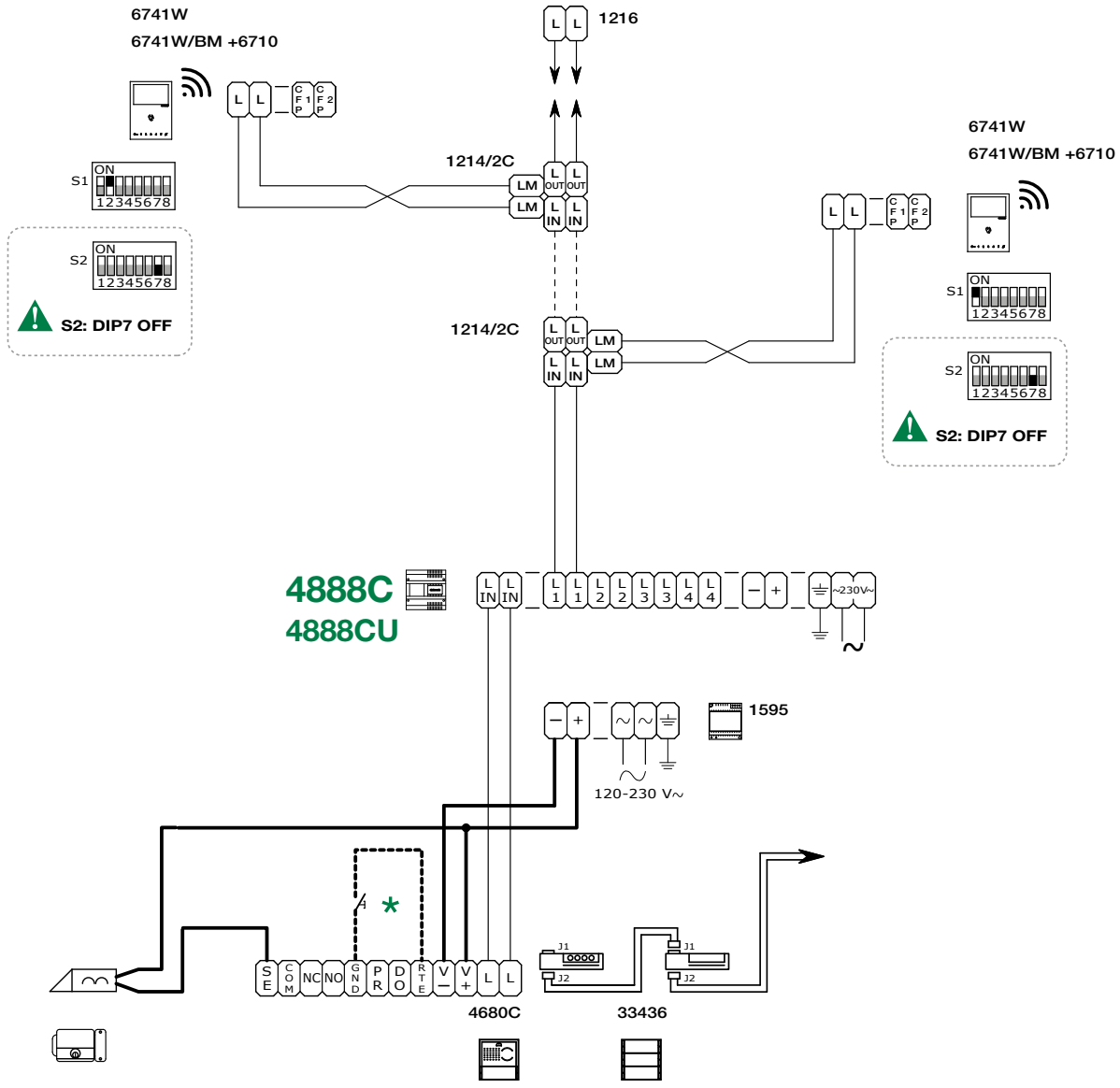

System powered by art. 1210

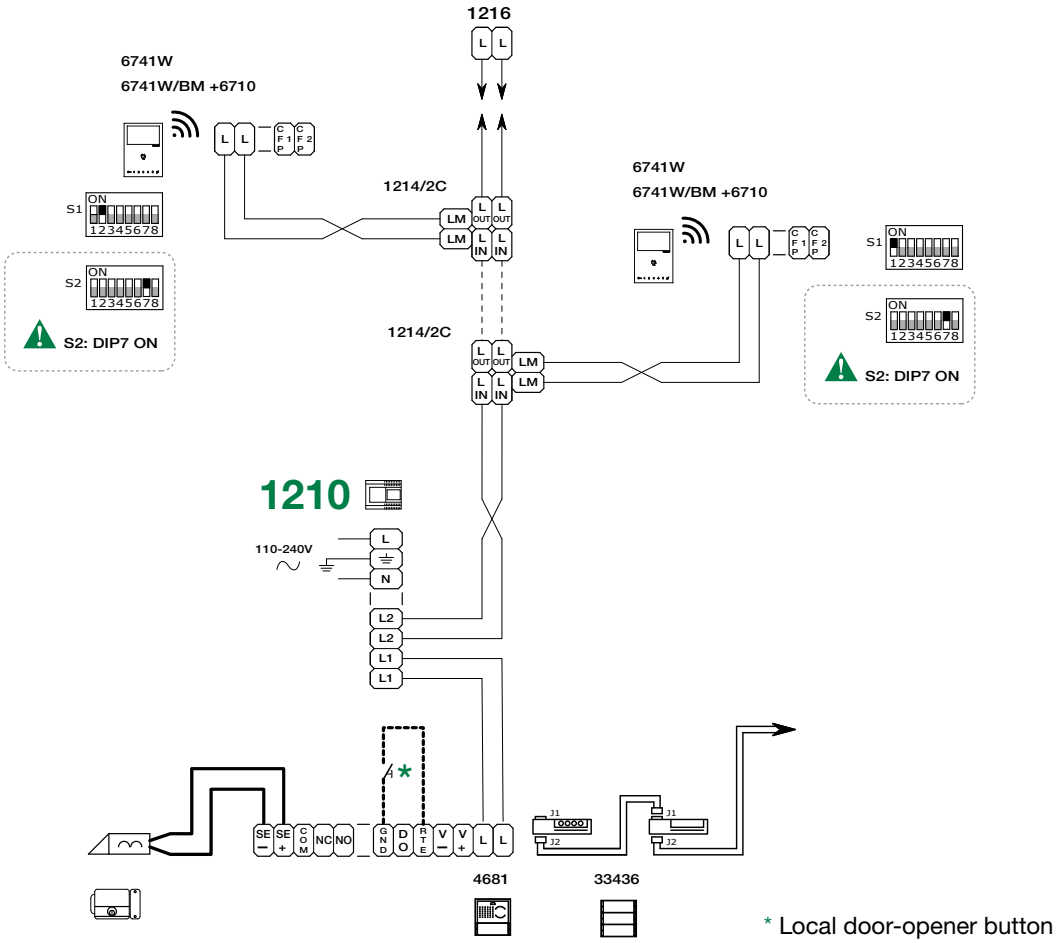

* Local door-opener button

Kit 8451V: basic single-family system powered by art. 1209

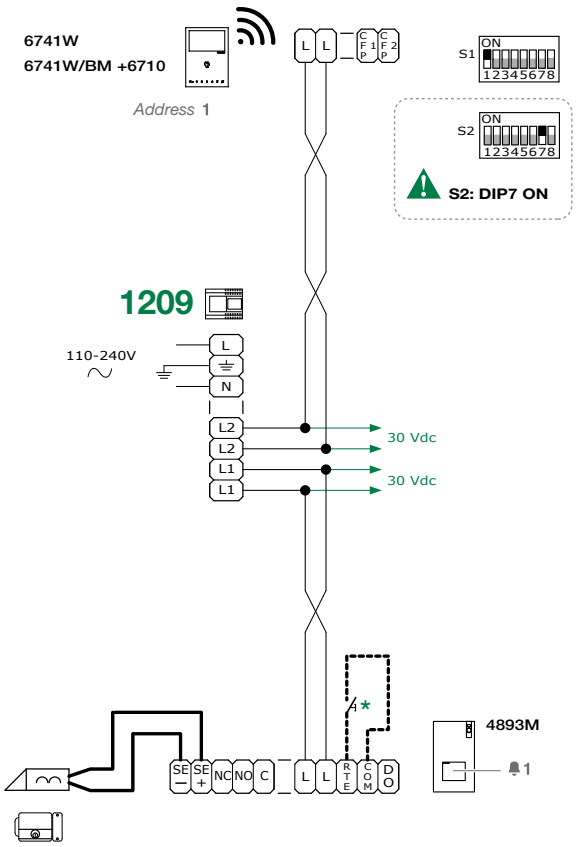

* Local door-opener button

Art. 6741W (/BM) and a secondary monitor in branch connection

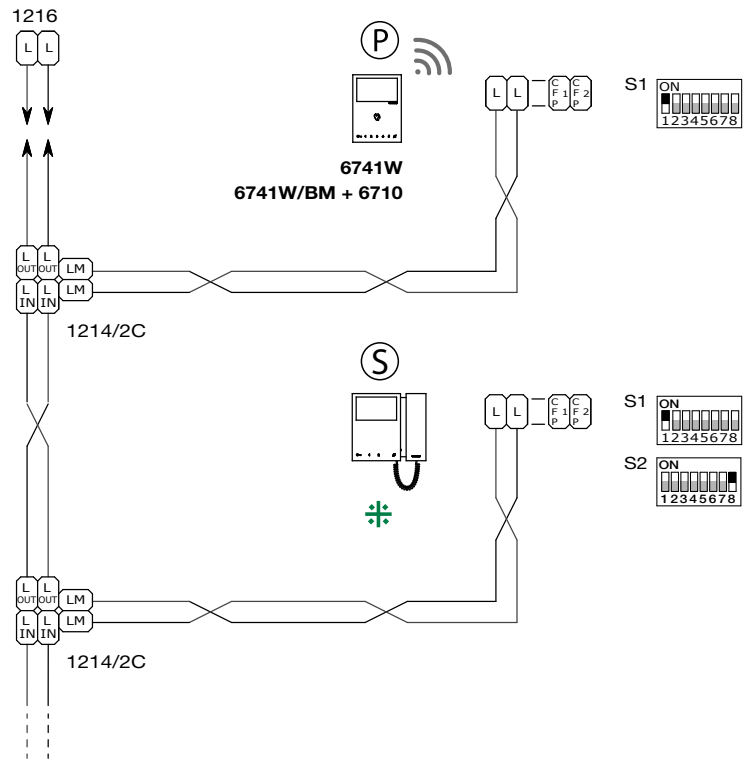

❉ Compatible secondary monitors

Art. 6741W (/BM) and a 6721W (/BM) secondary monitor in cascade connection

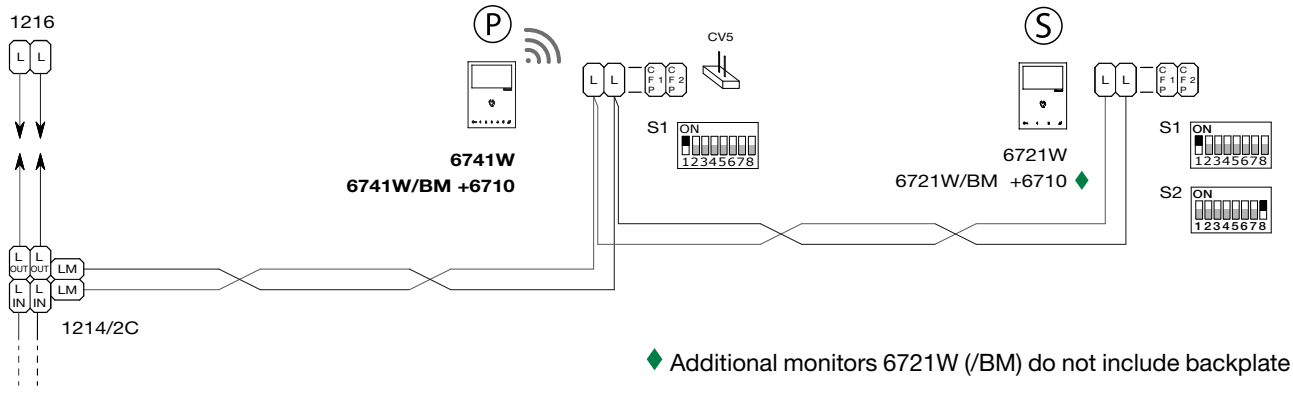

♦ Additional monitors 6721W (/BM) do not include backplate

System performance and layouts

For further information of system performance and to view installation layouts, click on the system type that best meets your requirements:

- **Audio/video kit** for the creation of audio-video systems for *individual residences*.
- **Building Kit audio/video system** for the creation of audio-video systems for *small apartment blocks.*
- **SBTOP audio/video system** for the creation of audio-video systems for *residential complexes.*

Table of contents

Warning

Monitor description 237
- **Description of buttons 238**
- **Indicator LED description 238**

Technical specifications 239

Installation 241
- **Removing / Fitting the terminal 242**

Connections 242

Monitor configuration 243
- **Configuration of main and secondary internal units 243**
- **Power supply configuration and management 243**

Keys configuration 244
- **Basic configuration 244**
  - Legend 244
- **Advanced configuration 245**
  - Intercom calls: introduction 245
    - Internal **general** intercom call and external general intercom call: button programming 245
    - Intercom call to selective address: button programming 246
    - Selective intercom address 246
    - Assigning a selective address to the monitor 246
    - Deleting the selective address of the monitor. 246
  - Generic actuator, Addressable actuator 247
    - Generic **actuator**: button programming 247
    - Addressable **actuator**: button programming 247
  - Other functions: button programming 248
  - Programming range 248
  - Changing monitor ringtones 249
  - Programming reset 249

System performance and layouts 249

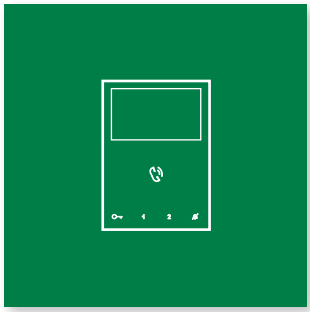

Mini Handsfree monitor Art. 6721W - Art. 6721W/BM

Monitor description

The Mini Handsfree series is comprised of hands-free monitors that can be used in “Building Kit” (exclusively 2 wire), Simplebus Top and Kit Video systems.

- *Article 6721W is a colour monitor equipped as standard with 5 buttons (3 additional buttons can be added with the accessory Art. 6734W)*
- *Article 6721W/BM is a colour monitor equipped as standard with 5 buttons (3 additional buttons can be added with the accessory Art. 6734W) and magnetic induction audio amplification. Not supplied with backplate 6710.*

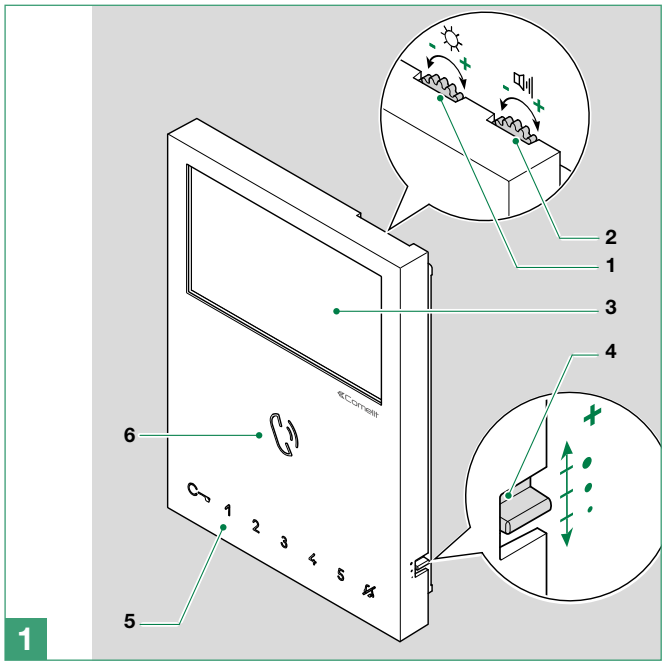

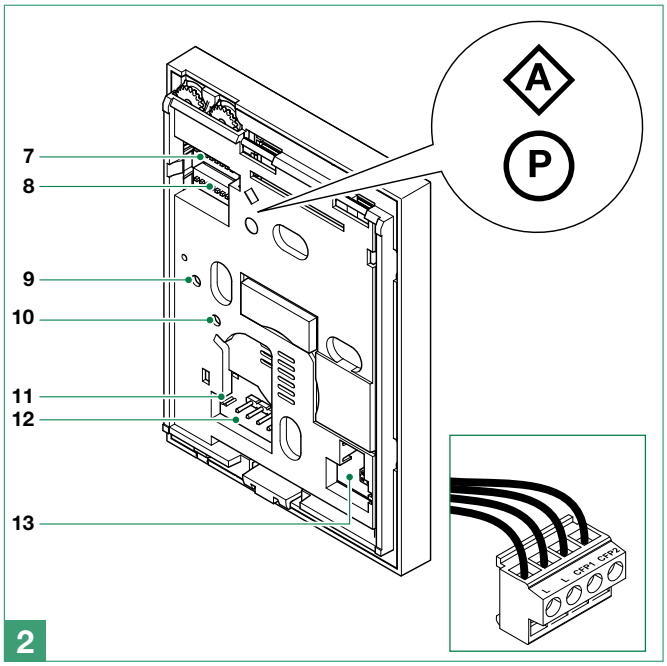

1. Brightness control
   - ▶ To increase the value, turn clockwise
2. Loudspeaker volume control
   - ▶ To increase the value, turn clockwise
3. 4.3’’LCD colour screen
4. Call volume adjustment (high - medium - low)
5. Soft-touch keys
6. Speaker and audio activation key
7. **S1** Ⓐ Micro-switches for user code setting. **“addressing table”**
8. **S2** Ⓟ Micro-switches for programming keys and functions

   DIP 1-2-3-4 for key function programming

   DIP 5-6 access to programming

   DIP 7 for management of power supply voltage, see **“Monitor configuration”**

   DIP 8 for main and secondary monitor setting, see **“Monitor configuration”**
9. Factory setting - **DO NOT CHANGE!**
10. Factory setting - **DO NOT CHANGE!**
11. **CV 5** Jumper for video closure. In systems with more than one monitor connected in cascade, only the monitor furthest away must have CV5 closed.
12. Pin for securing terminal block
13. Space for housing additional keys (Art. 6734W)

Terminal block for system connection

LL Bus line connection terminals

CFP1 CFP2 Outside door call input

Description of buttons

▶ Press the desired button once to activate the associated function.



Wait for approximately 1 sec. before pressing the same button again.



AUDIO ACTIVATION KEY

Press the button to answer an incoming call.

HANDS-FREE MODE ACTIVATION/DEACTIVATION

On receipt of a call, the audio will be activated automatically.

▶ *A long press enables/disables the Hands-Free mode (10 s.)*



LOCK RELEASE KEY

Use this key to open the corresponding door lock.



ACTUATOR KEY *(programmable*)*

Allows activation of the associated relay.



SELF-IGNITION KEY *(programmable*)*

Allows ignition of the external video unit, and therefore viewing of the external image.



PRIVACY KEY

The ringtone will be silenced on receipt of a call from the external unit and from the switchboard.



ADDITIONAL KEYS

Art. 6734W Additional buttons kit - can be purchased separately.

(*) Buttons may be programmed as:

- **DOCTOR MODE ACTIVATION KEY**
  Allows automatic operation of the associated lock-release on receipt of a call from an external unit.
  ▶ *To activate/deactivate the Doctor mode, press the button programmed for this function.*
- **INTERCOM CALL KEY**
  Allows a call from one internal unit to one or more internal units.
- **CALL TO A MAIN OR SECONDARY SWITCHBOARD KEY**
- **PRIORITY CALL TO SWITCHBOARD (“PAN”) KEY**
- **CALL TO CARETAKER DOOR-ENTRY PHONE KEY**

Indicator LED description



FLASHING LED: incoming call
STEADY LED (during call): audio activated
STEADY LED (when idle): Hands-Free mode activated



FLASHING LED: call in progress
1 flash after pressing button: confirms door opening
slow flashing: door open



FLASHING LED: device in programming mode
4 flashes: system engaged
STEADY LED: Privacy mode activated
3 flashes (every 5 sec): Doctor mode activated

Technical specifications

MAIN SPECIFICATIONS	6721W	6721W/BM
Audio/video system	Yes	Yes
Wall-mounted	Yes	Yes
Desk base-mounted	Yes	Yes
Hands-free function	Yes	Yes
Audio amplification	-	Yes
Type of display	LCD	LCD
Display size (inches)	4,3" 16/9	4,3" 16/9
Display resolution (H x V)	480x272pixel	480x272pixel
B/W or colour display	Color	Colors
Product colour	White	White
Sensitive Touch technology	Yes	Yes
Total buttons	5	5
Additional buttons	3	3
LED signaling	3	3
Backlighting color	White	White
FUNCTIONS		
Actuator control function	Yes	Yes
Self-ignition	Yes	Yes
Switchboard call function	Yes	Yes
Panic call	Yes	Yes
Intercom function	Yes	Yes
Selective intercom call	Yes	Yes
Call to multiple addresses	Yes	Yes
Privacy function	Yes	Yes
Doctor	Yes	Yes
Floor door call function	Yes	Yes
Electronic bell	Yes	Yes
Customisable ringtone	Yes	Yes
Receiving text messages	-	Yes
Images reception	-	Yes
HARDWARE SPECIFICATIONS		
Removable terminals	Yes	Yes
SETTINGS		
Loudspeaker volume control	Yes	Yes
Microphone volume control	Yes	Yes
Ringtone volume control	Yes	Yes
Display brightness control	Yes	Yes
Display contrast control	Yes	Yes
Display colour control	Yes	Yes
GENERAL INFO		
Product height (mm)	160	160
Product width (mm)	115	115
Product depth (mm)	22	22

TECHNICAL SPECIFICATIONS	6721W	6721W/BM
Power supply voltage	22÷28Vdc	22÷28Vdc
Absorption	2	2
Maximum current absorption (mA)	325	325
Microphone	6mm omni-direction	6mm omni-direction
Loudspeaker	36mm 40Ohm 1W	36mm 40Ohm 1W
IP Rating	30	30
Operating temperature (°C)	-5÷40	-5÷40
Relative humidity for operation	25 - 75 %	25 - 75 %
Video encoding	PAL / NTSC	PAL / NTSC
Product weight (g)	0,533	0,533
Clamps	L L CFP1 CFP2	L L CFP1 CFP2

Installation

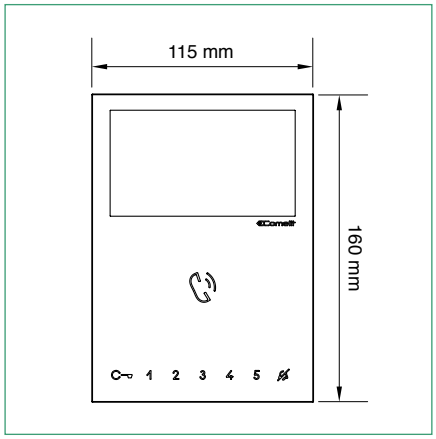

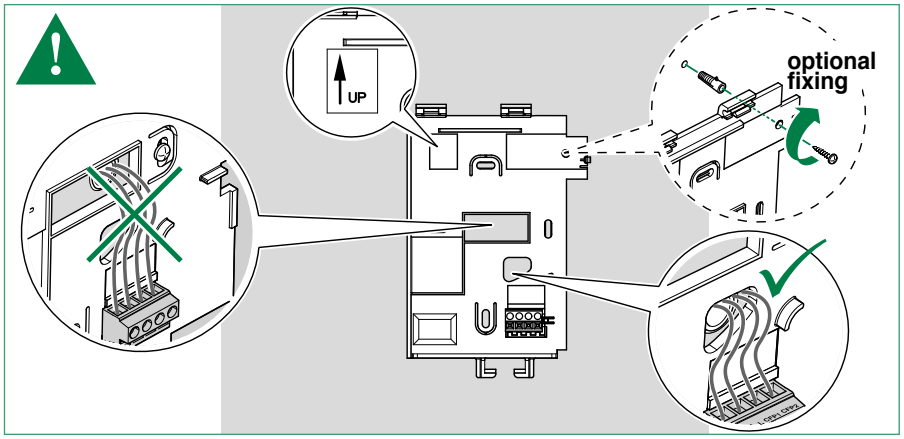

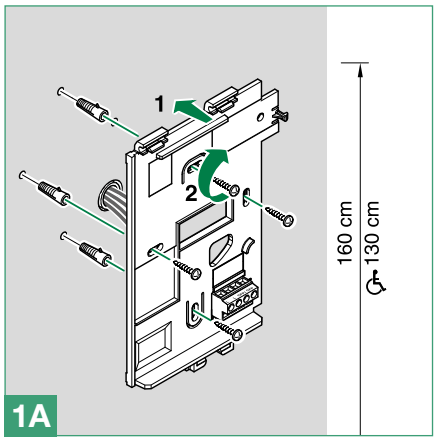

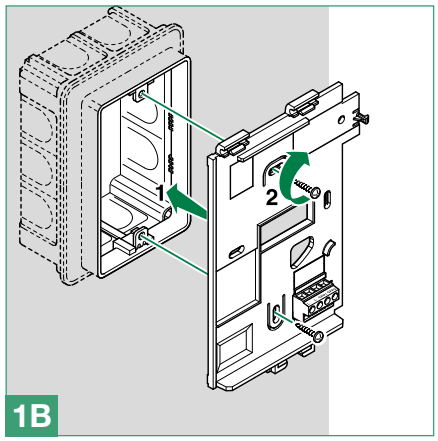

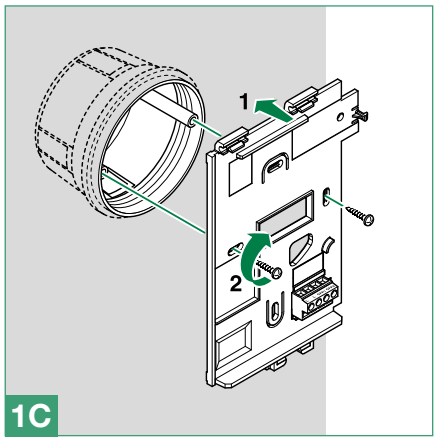

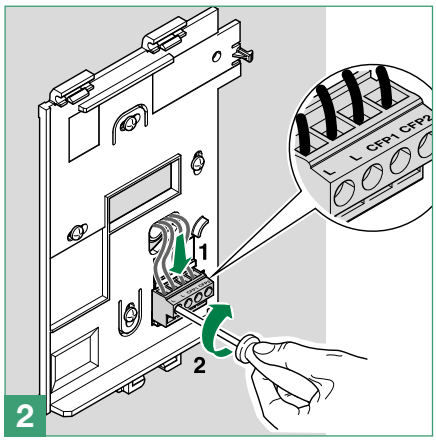

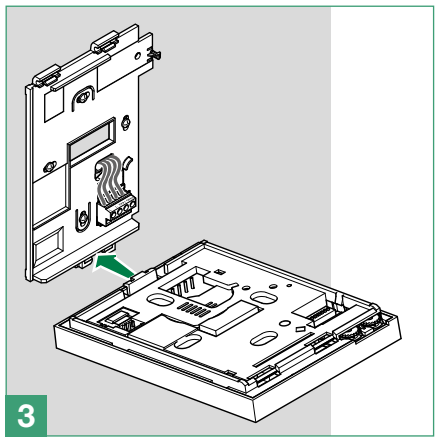

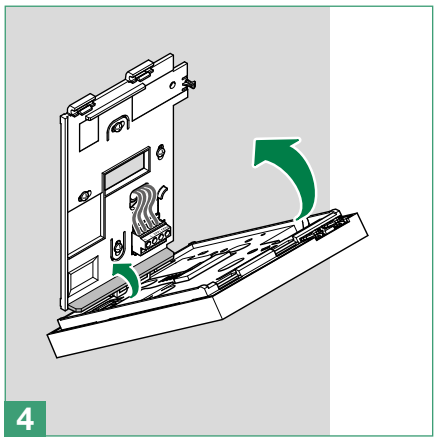

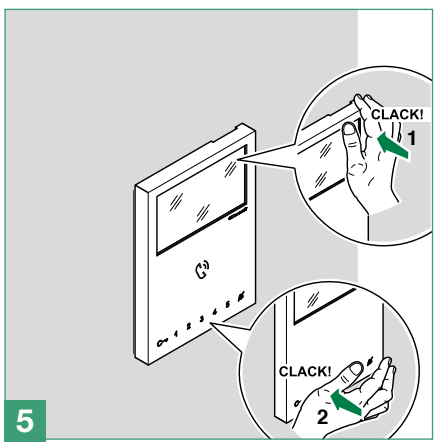

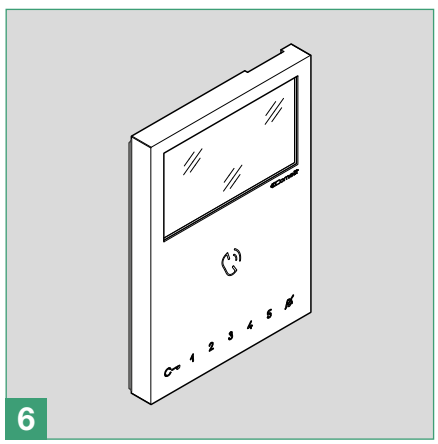

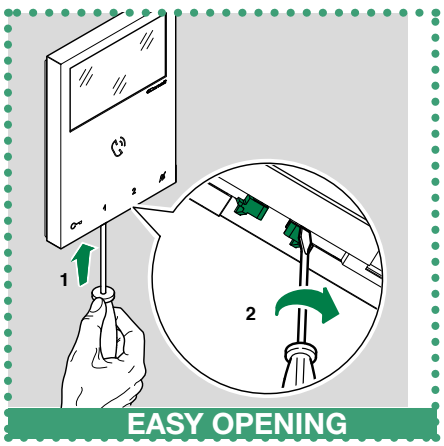

Removing / Fitting the terminal

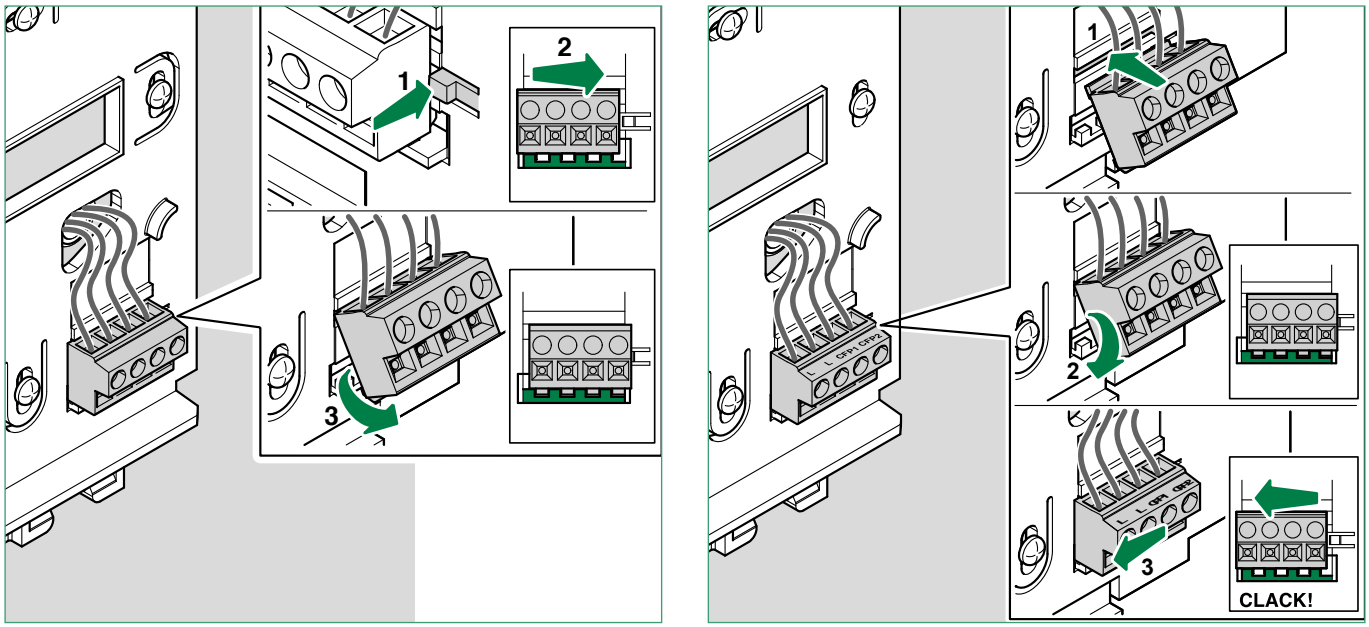

Connections

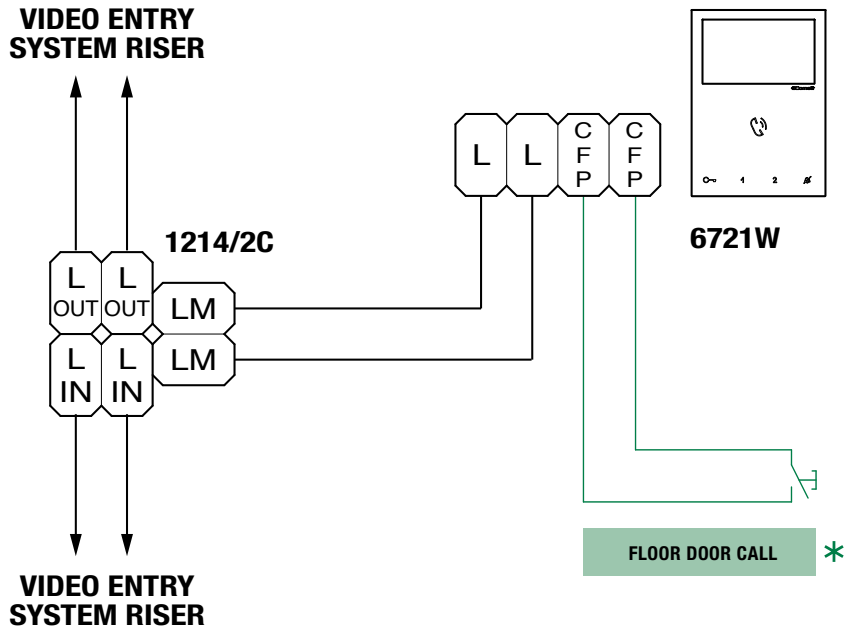

* **20 m MAX** - Use shielded cable for the connection and do not route the cables in the vicinity of heavy inductive loads or power supply cables (230V/400V).
Where multiple door-entry phones or monitor backplates have the same user code, connect the CFP button on one only; all the devices will ring simultaneously.

Monitor configuration

Configuration of main and secondary internal units

- To configure an internal unit as the **main unit**, set **DIP 8** of **S2** to **OFF**
- To configure an internal unit as a **secondary unit**, set **DIP 8** of **S2** to **ON**

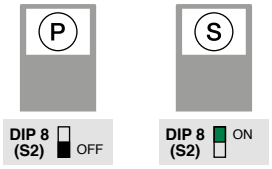

In systems with Art. 1209 or Art. 1210, you can configure a maximum of 1 main monitor, while in systems with Art. 4888C you can configure a maximum of 2 main monitors.

Power supply configuration and management

- For correct power management, the **DIP 7** of **S2** should be set in accordance with the type of system and its configuration:

- **in systems with power supply units 1209 and 1210:** always set the **DIP 7** of **S2** to **ON**
- **in systems with power supply unit 4888C:** for secondary internal units, always set the **DIP 7** of **S2** to **OFF**, for main internal units, follow the indications given in the examples in the figure below:

  A. 1 main internal unit

  B. 2 main internal units

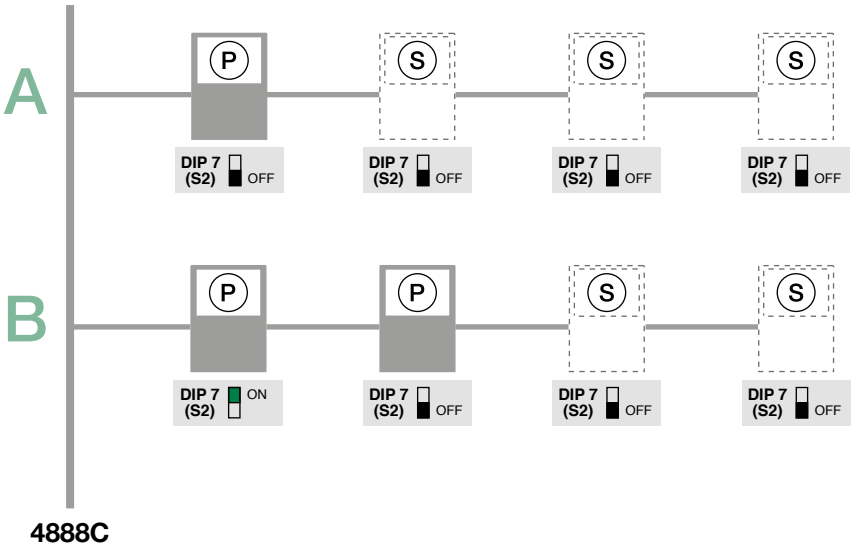

Keys configuration

By default the buttons control the functions in row **A** *("Basic configuration" table).*

It is possible to change the default configuration of the keys by changing the positions of the S2 DIP switches 1-2-3-4 on the rear of the monitor to one of the combinations (B-P) proposed in the table. All the keys will change function.

Basic configuration

	S2 DIP-switch				Mini Handsfree			+ Art. 6734W		
	DIP 1	DIP 2	DIP 3	DIP 4	🔑	1	2	3	4	5
A	**OFF**	**OFF**	**OFF**	**OFF**	**APRIP**	**ACT**	**AI**	**CCS**	**D**	**PAN**
B	ON	OFF	OFF	OFF	APRIP	CCS	AI	INT	INTb	D
C	OFF	ON	OFF	OFF	APRIP	INT	AI	INTb	ACT	CCS
D	ON	ON	OFF	OFF	APRIP	ACT	CCS	CCP	PAN	K
E	OFF	OFF	ON	OFF	ACT	ACT	ACT	ACT	ACT	ACT
F	ON	OFF	ON	OFF	APRIP	INT	ACT	CCS	CCP	INTb
G	OFF	ON	ON	OFF	APRIP	AI	D	K	CCS	CCP
H	ON	ON	ON	OFF	APRIP	INTb	INT	AI	INT	PAN
I	OFF	OFF	OFF	ON	APRIP	CCS	PAN	D	AI	INTb
J	ON	OFF	OFF	ON	APRIP	K	CCS	PAN	CCP	AI
K	OFF	ON	OFF	ON	APRIP	CCP	K	PAN	ACT	INT
L	ON	ON	OFF	ON	APRIP	PAN	CCP	CCS	K	ACT
M	OFF	OFF	ON	ON	APRIP	INTb	AI	INT	ACT	D
N	ON	OFF	ON	ON	APRIP	INT	INT	INT	INT	INT
P	OFF	ON	ON	ON	NULL	NULL	NULL	NULL	NULL	NULL
	ON	ON	ON	ON	PROG					

default

Legend

APRIP	Lock-release	*Short press of the key*
ACT	Actuator	
AI **	Self-ignition	
CCP *	Call to main switchboard	
CCS *	Call to secondary switchboard	
K	Caretaker door-entry phone call	
PAN *	Priority call to switchboard	
INT	General or selective programmable intercom call *Standard single-family call for KIT and Simplebus Top.*	
INTb	Two-family intercom call - *For Kit only*	
NULL	No function	
D **	Doctor	*Long press of the key*
PROG	With these settings of the S2 DIP-switches, the buttons control the programmed functions as in the "Advanced configuration".	

* Cannot be used in kit systems

** A long press enables/disables the function

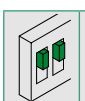	DIP-switch on
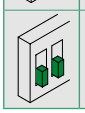	DIP-switch off

Advanced configuration

If the basic configuration settings do not reflect requirements, the buttons can be programmed differently by carrying out the steps below.

After programming, set S2 DIP switches 1-2-3-4 (PROG) to ON. With these DIP-switch settings, the buttons control the programmed functions.

The buttons that are NOT programmed control the functions in row A *(*table **"Basic configuration"** *)*.

Intercom calls: introduction

From an internal unit you can send an intercom call to:

- **all devices of the same apartment** *(internal general intercom call)*
- **all devices of another apartment** *(external general intercom call)*
- **a single internal unit** *of an apartment identified by a dedicated intercom address different to the address that identifies the apartment (intercom call to selective address).*
- **a group of internal units** *of the same apartment or another apartment identified by a dedicated intercom address different to the address that identifies the apartment (selective group intercom call).*

General and selective intercoms CANNOT be used together on the same riser.

Internal **general** intercom call and external general intercom call: button programming

1. Take note of the S1 DIP-switch settings.

2. To enter programming mode, set S2 **DIP switch 6** to ON.

» *the Privacy LED switches on*



3. Refer to the table **"Basic configuration"** and select a combination in which the intercom function is listed for the buttons you wish to program.

Example:

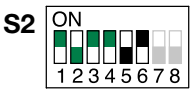

4. Set DIP switch S1according to the call address of the desired apartment. See **"addressing table"**

5. Press and release the button to be associated with the function.

» *Correct procedure indication*: the *Lock release* LED flashes for a few seconds and a confirmation tone sounds.

» *Procedure error indication:* the Audio LED *flashes for few seconds and an error tone sounds.*

6. Exit programming mode by setting S2 **DIP switch 6** to OFF.

» *the Privacy LED switches off*

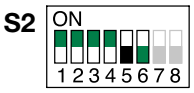

7. Set S2 **DIP switches 1-2-3-4** to ON.

8. Return S1 DIP switches to the original combination.

Intercom call to selective address: button programming

✓ *It is necessary to carry out the 3 operations described in the paragraph* "Assigning a selective address to the monitor".

1. Take note of the S1 DIP-switch settings.

2. To enter programming mode, set S2 **DIP switch 6** to ON.
» *the Privacy LED switches on.*

S2 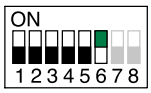

⇒ 

3. Refer to the table **"Basic configuration"** and set on S2 a combination in which the intercom function associated with the buttons you wish to program appears.

Example:
S2 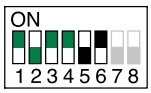

4. The S1 DIP switches according to the ***selective*** address of the internal unit you wish to call. Table B.

5. Press and release the button to be associated with the function.
» *Correct procedure indication*: the *Lock release* LED flashes for a few seconds and a confirmation tone sounds.
» *Procedure error indication:* the Audio LED *flashes for few seconds and an error tone sounds.*

6. Exit programming mode by setting S2 **DIP switch 6** to OFF.
» *the Privacy LED switches off.*

S2 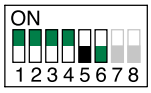

7. Set S2 **DIP switches 1-2-3-4** to ON.

8. Return S1 DIP switches to the original combination.

Selective intercom address

You must set the intercom address on all the internal units of the riser.
You can assign the same intercom address to a maximum of 3 internal units.
For group calls, select the desired intercom codes simultaneously (max. 3).

TABLE B

Code	S1 DIP switch ON	Code	S1 DIP switch ON
1	1 	**5**	5 
2	2 	**6**	6 
3	3 	**7**	7 
4	4 	**8**	8 

Assigning a selective address to the monitor

Take note of the S2, S1 settings and restore on completion of programming

1.	2.	3.
Assign to the monitor one of the 8 available intercom codes in TABLE B. Example address 3. S1 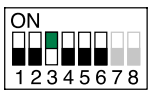	S2 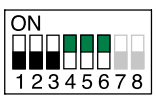 ⇒ 	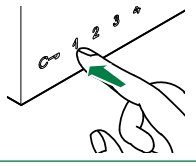 ⇒ 

Deleting the selective address of the monitor.

1.	2.
Carry out the operations as shown in the figure. S1 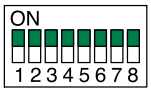 S2 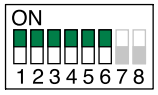 ⇒ 	 ⇒ 

Generic actuator, Addressable actuator

Generic **actuator**: button programming

1. Take note of the S1 DIP-switch settings.

2. To enter programming mode, set S2 **DIP switch 6** to ON.
» *the Privacy LED switches on*

S2

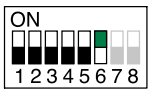

⇒

3. Refer to the table **"Basic configuration"** and set on S2 a combination in which the actuator function (ACT) associated with the buttons you wish to program appears.

Example:

S2

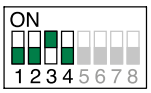

4. Set all the S1 DIP switches to ON.

S1

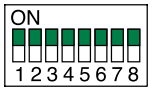

5. Press and release the button to be associated with the function.
» *Correct procedure indication*: the *Lock release* LED flashes for a few seconds and a confirmation tone sounds
» *Procedure error indication:* the Audio LED *flashes for few seconds and an error tone sounds.*

6. Exit programming mode by setting S2 **DIP switch 6** to OFF.
» *the Privacy LED switches off*

S2

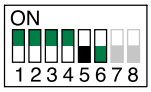

7. Set S2 **DIP switches 1-2-3-4** to ON.

8. Return S1 DIP switches to the original combination.

Addressable **actuator**: button programming

1. Take note of the S1 DIP-switch settings.

2. To enter programming mode, set S2 **DIP switch 6** to ON.
» *the Privacy LED switches on*

S2

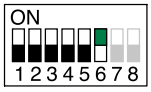

⇒

3. Refer to the table **"Basic configuration"** and set on S2 a combination in which the actuator function (ACT) associated with the buttons you wish to program appears.

Example:

S2

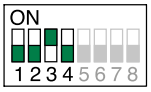

4. The S1 DIP switches with eh desired code, according to **"addressing table"**

5. Press and release the button to be associated with the function.
» *Correct procedure indication*: the *Lock release* LED flashes for a few seconds and a confirmation tone sounds
» *Procedure error indication:* the Audio LED *flashes for few seconds and an error tone sounds.*

6. Exit programming mode by setting S2 **DIP switch 6** to OFF.
» *the Privacy LED switches off*

S2

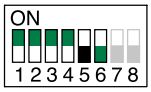

7. Set S2 **DIP switches 1-2-3-4** to ON.

8. Return S1 DIP switches to the original combination.

Other functions: button programming

1. To enter programming mode, set **S2 DIP switch 6** to ON.
» *the Privacy LED switches on*

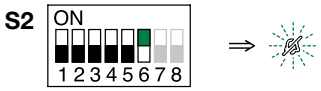

2. Refer to the table **"Basic configuration"** and set on **S2** a combination in which the function associated with the buttons you wish to program appears.

Example:

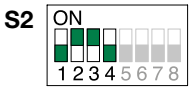

3. Set all the **S1** DIP switches to ON.

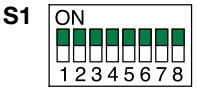

4. Press and release the button to be associated with the function.
» *Correct procedure indication*: the *Lock release* LED flashes for a few seconds and a confirmation tone sounds
» *Procedure error indication:* the Audio LED *flashes for few seconds and an error tone sounds.*

5. Exit programming mode by setting S2 **DIP switch 6** to OFF.
» *the Privacy LED switches off*

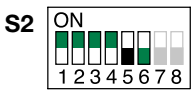

6. Set S2 **DIP switches 1-2-3-4** to ON.

Programming range

Take note of the S2, S1 settings and restore on completion of programming

	1.	2.	3.		4.
Range minimum address	 Set code. **"addressing table"**	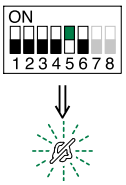	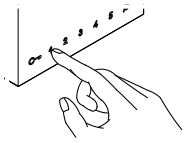		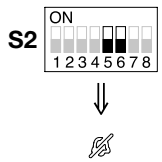
Range maximum address			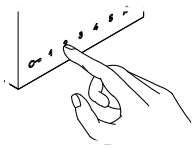		
Enable range			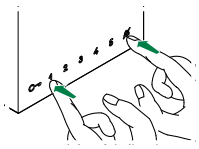		
Disable range			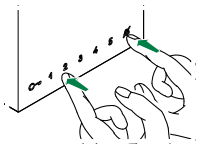		
Deleting the range	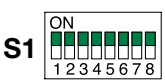	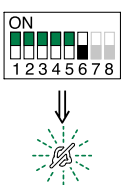	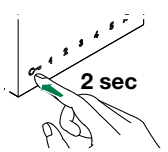		

Changing monitor ringtones

1. Press and hold C⊸ for 6 sec.
   - » a confirmation tone will sound
   - » the Privacy LED will flash to indicate "programming" mode.

✓ the procedure can only take place while the system is in standby; otherwise the Privacy LED will flash 4 times to inform the user that the system is engaged.

2. Press and release C⊸

   Once (1 confirmation tone is emitted) to change the ringtone for calls from the external unit.
   Twice (2 confirmation tones emitted) to change the switchboard ringtone.
   3 times (3 confirmation tones are emitted) to change the ringtone for intercom calls made from the internal unit.
   4 times (4 confirmation tones are emitted) to change the floor door call ringtone.

   Any further pressing of the C⊸ button repeats the sequence described above.

3. Press and release 1 to scroll through the various available ringtones in sequence.
4. Press 2 to confirm selection of the last ringtone heard and to exit (at any time) change monitor ringtone mode.
   - » one confirmation tone is emitted
   - » the Privacy LED switches off
5. Repeat steps 1 to 4 to change the other ringtones.

Programming reset

Factory settings:

- Button functions for the S2 DIP switches 1-2-3-4 combination
- Intercom address absent
- Range function and min./max. addresses absent
- Ringtone reset

Take note of the S2, S1 settings and restore on completion of programming

1.	2.
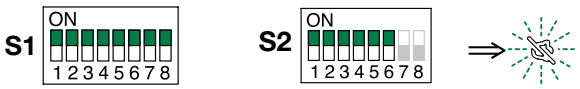	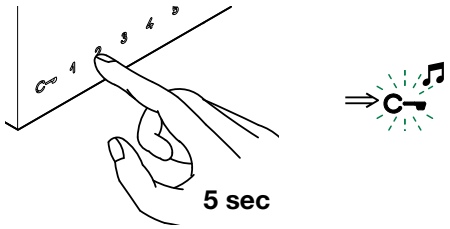

System performance and layouts

For further information of system performance and to view installation layouts, click on the system type that best meets your requirements:

- **Audio/video kit** for the creation of audio-video systems for *individual residences*.
- **Building Kit audio/video system** for the creation of audio-video systems for *small apartment blocks.*
- **SBTOP audio/video system** for the creation of audio-video systems for *residential complexes.*

Table of contents

Warning

Bracket and branch terminal art. 6710 251

Adapter plate Art. 6711W 252

Mounting on residential series box 503 253

Mounting in a round box 253

Desk-top base Art. 6732A 254

Removing [K] / fi tting [Y] the terminal 254

Disassembly 255

Additional buttons kit Art. 6734W 256

Fitting upgrade kit Art. 6734W 256

Bracket and branch terminal art. 6710

Accessory for wall-mounting in a residential series box for Mini Cornetta /BM versions (supplied with the Mini versions without /BM)

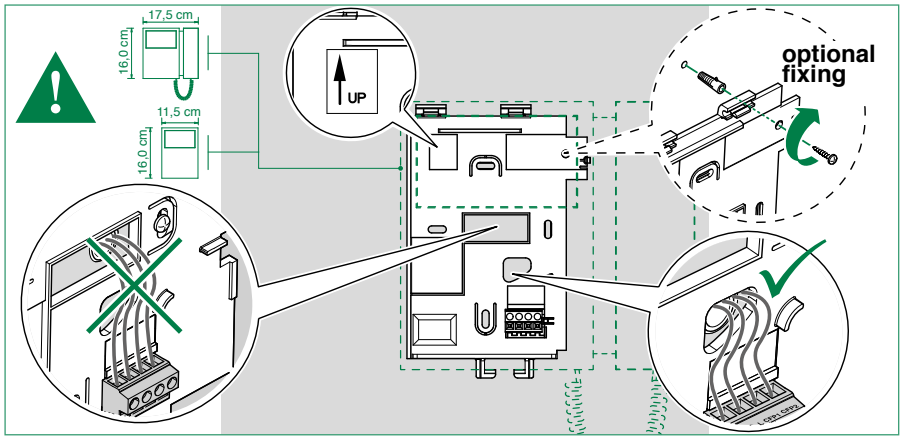

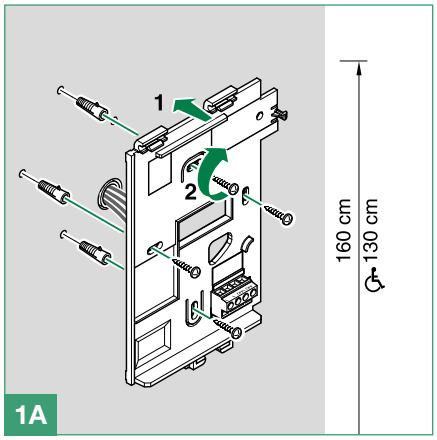

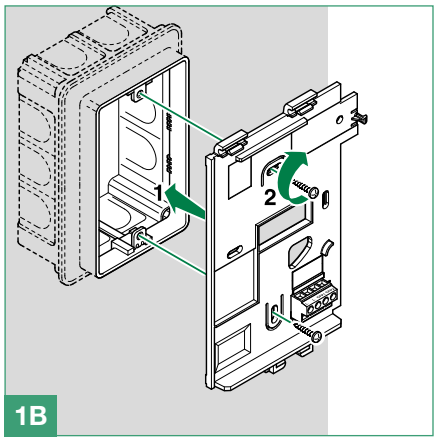

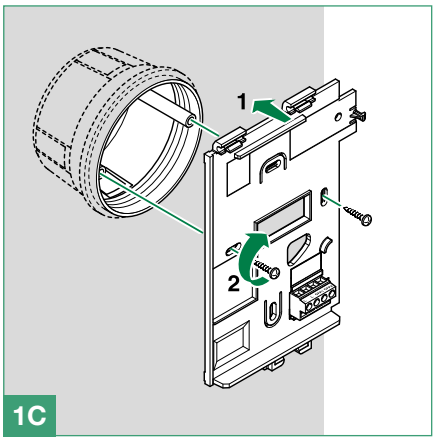

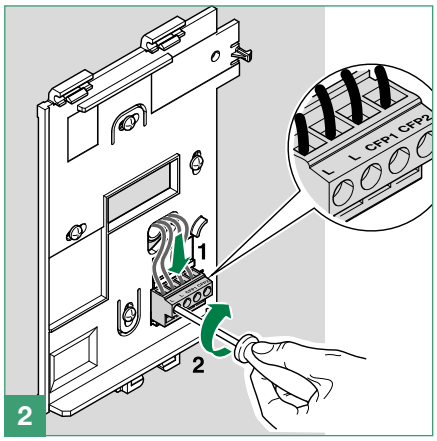

Adapter plate Art. 6711W

*Article **6711W** is an adapter plate used for installation of the Mini Cornetta monitor in replacement of Magis or Genius door entry monitors.*
The accessory is supplied complete with backplate Art. 6710 and distribution terminal Art. 1214/2C.

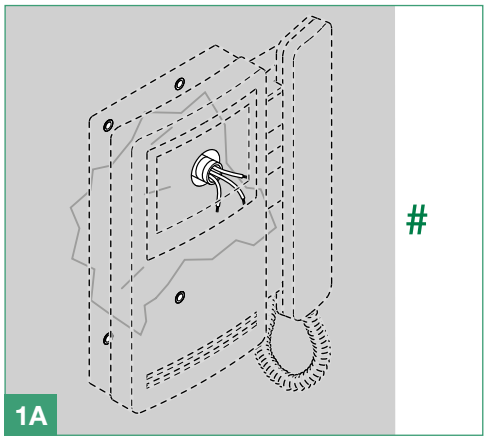

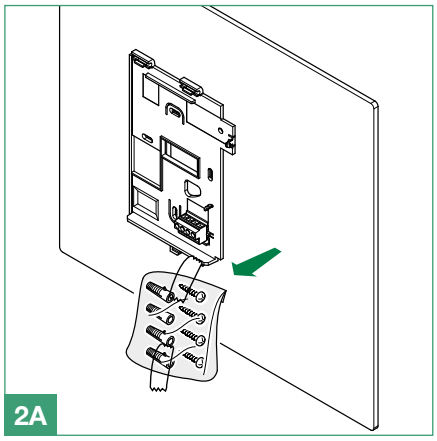

 # If the wall plugs are damaged, make new holes in the wall and use the wall plugs supplied.

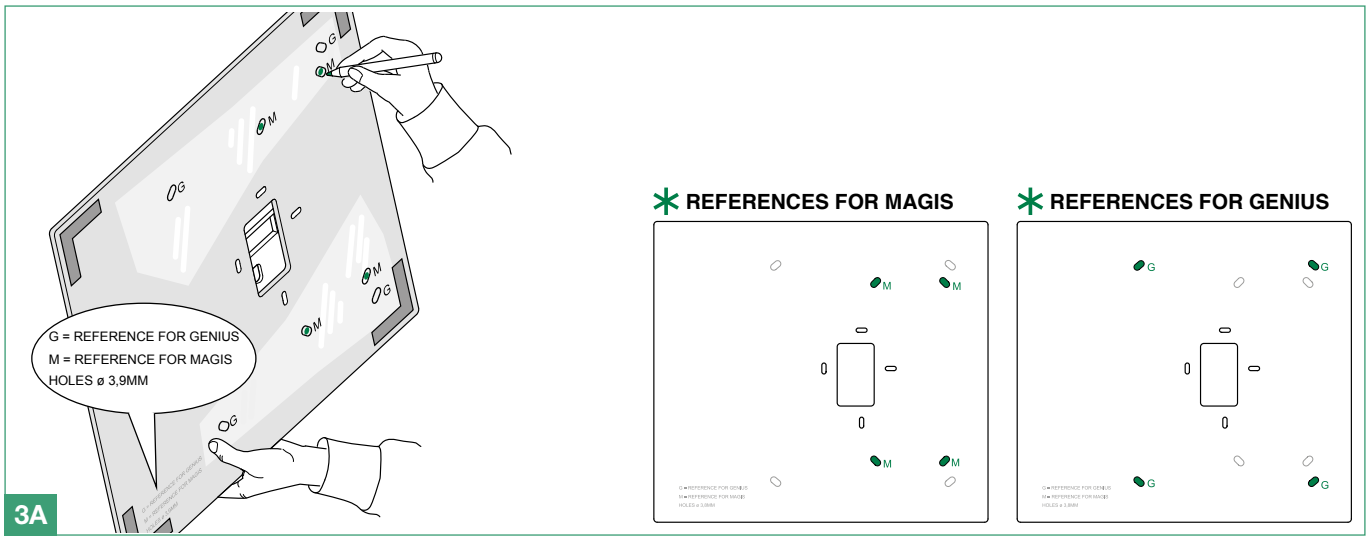

*** Hole positions for Magis/Genius monitor replacement.**

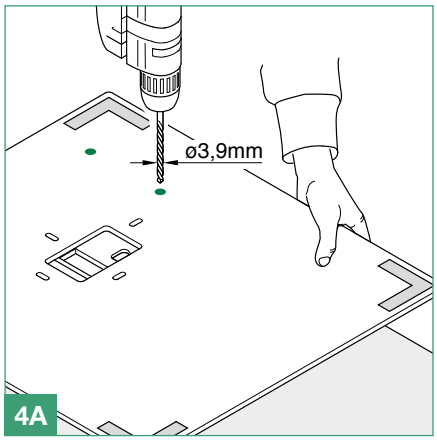

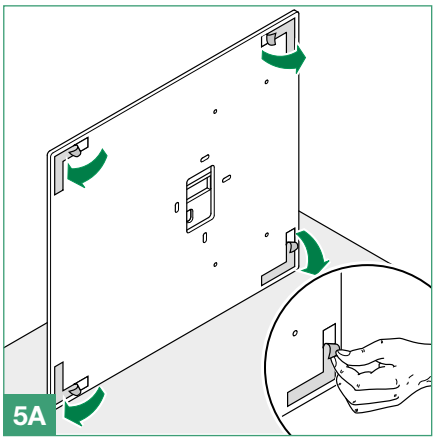

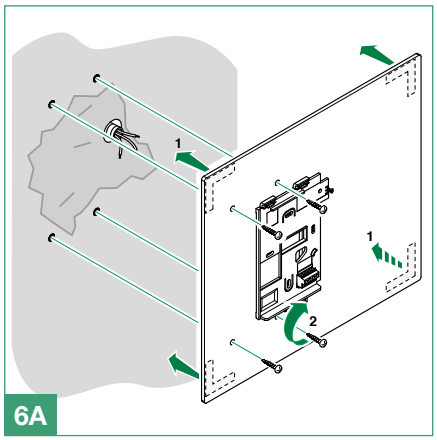

Mounting on residential series box 503

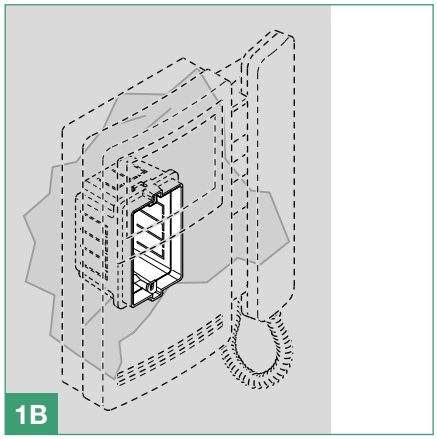

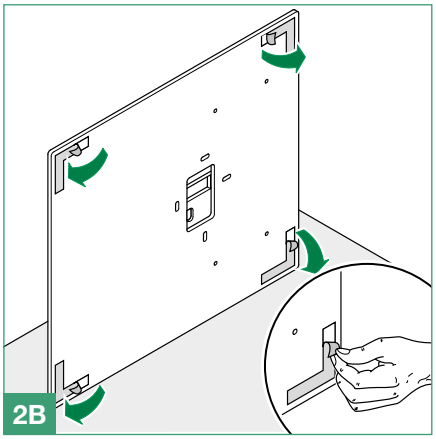

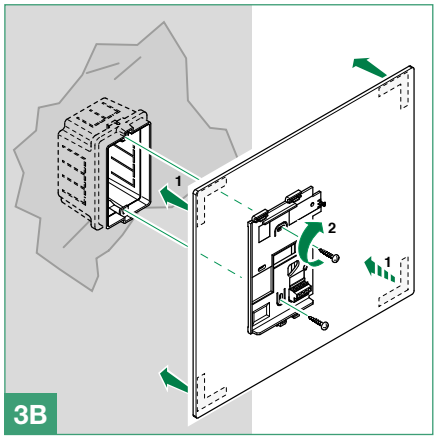

Mounting in a round box

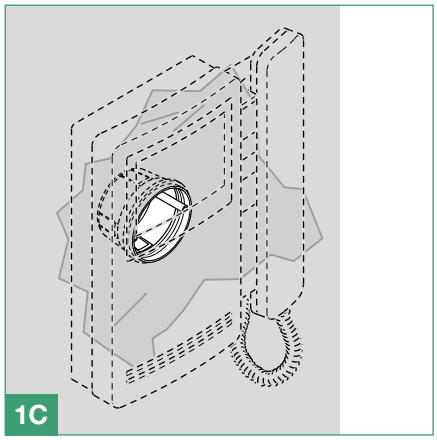

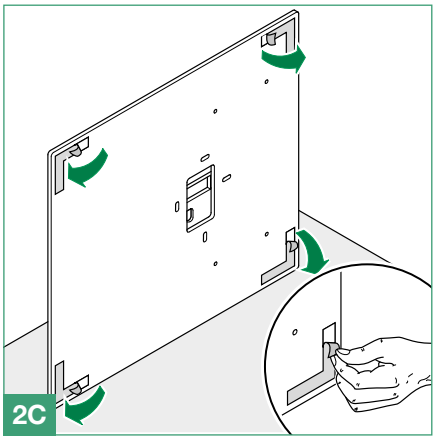

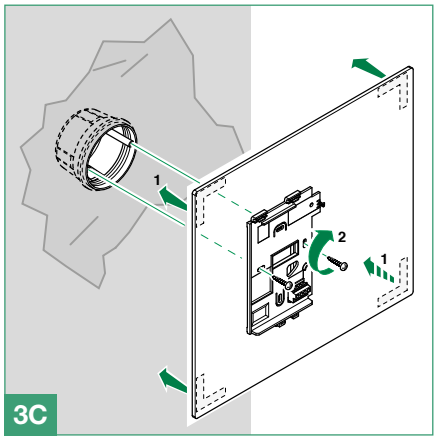

Desk-top base Art. 6732A

Article 6732A is an angle-adjustable desk base for conversion of the Mini Handsfree monitor for desk-top installation.

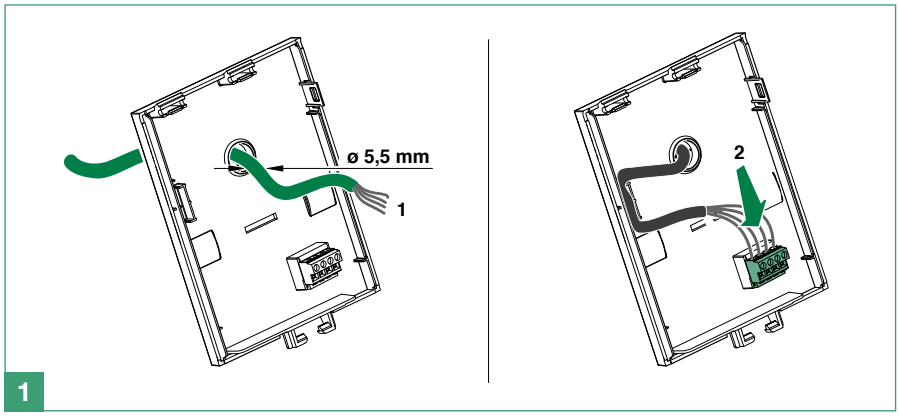

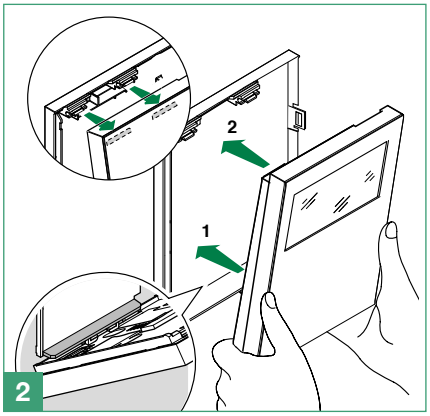

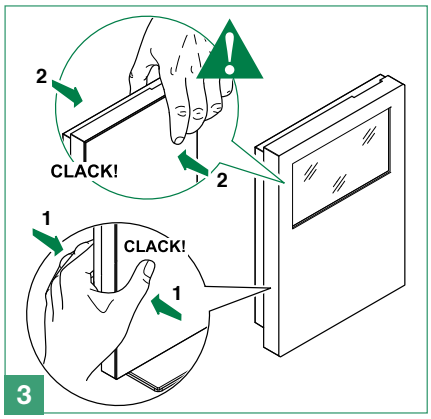

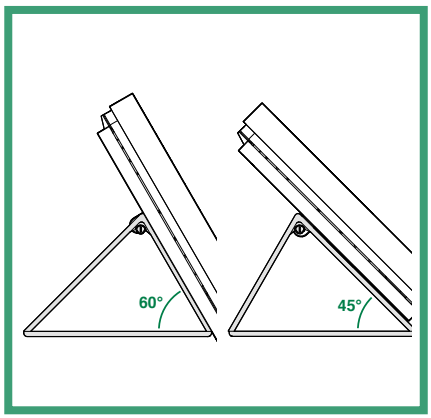

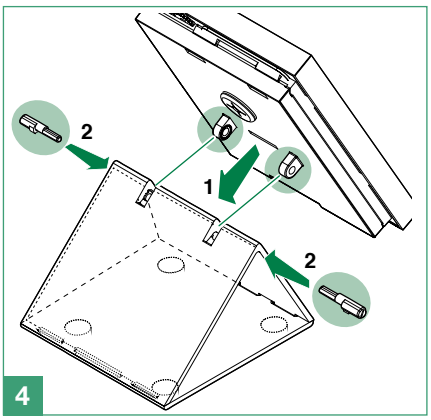

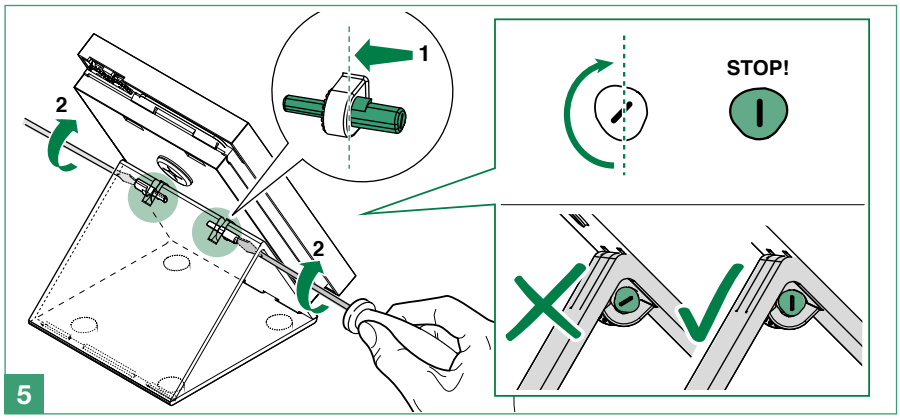

Removing [K] / fi tting [Y] the terminal

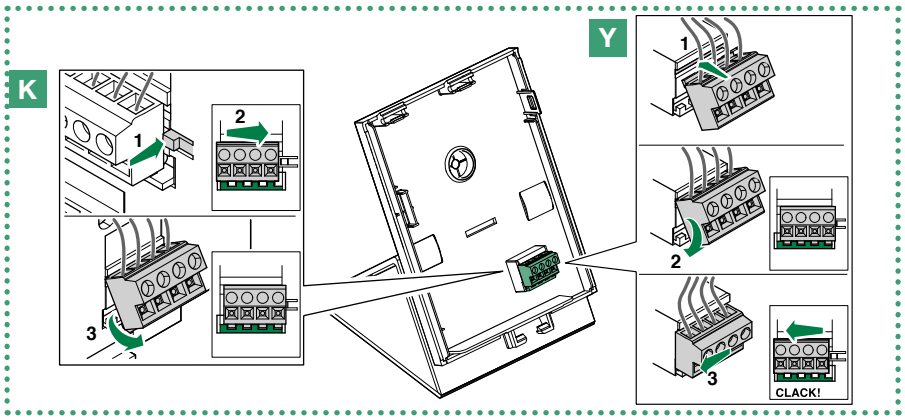

Disassembly

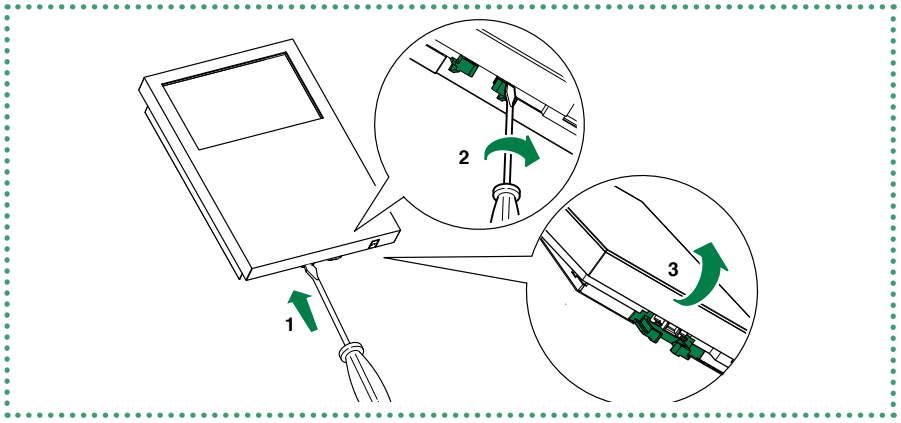

Additional buttons kit Art. 6734W

Accessory for converting Mini Vivavoce monitors Art 6721W-/BM and 6722W-/BM into versions with 8 buttons.

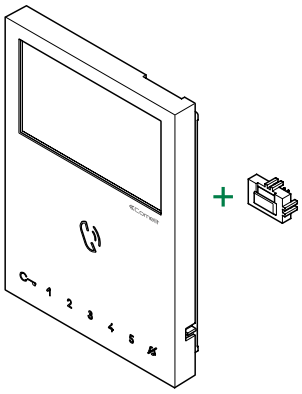

	Function		Function
	Lock-release key	4	Doctor (programmable*)
1	Actuator (programmable*)	5	Panic (programmable*)
2	Self-ignition (programmable*)		Privacy key
3	Secondary switchboard call (programmable*)		Accessory for transforming MINI VIVAVOCE monitor Art. 6721W (/BM) into version with 7 buttons.
* see the technical manual for Art. 6721W			

Fitting upgrade kit Art. 6734W

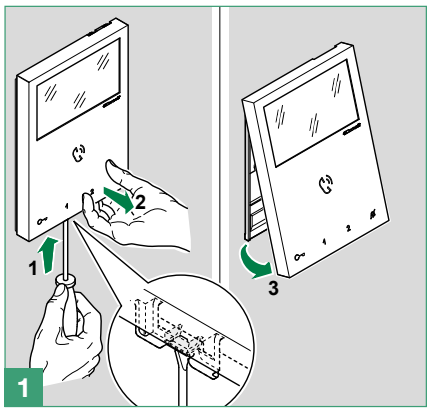

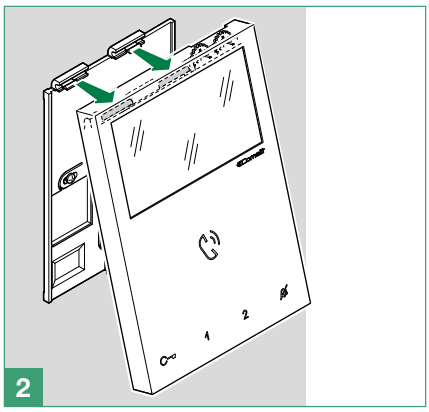

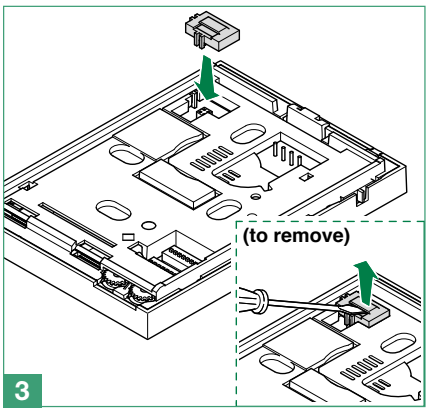

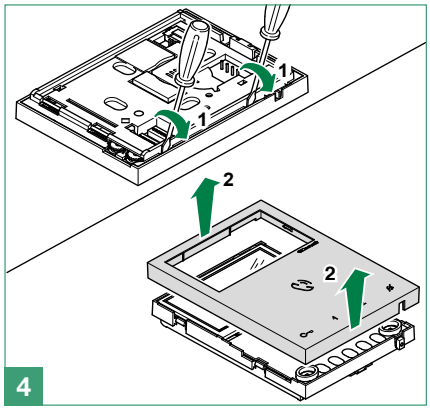

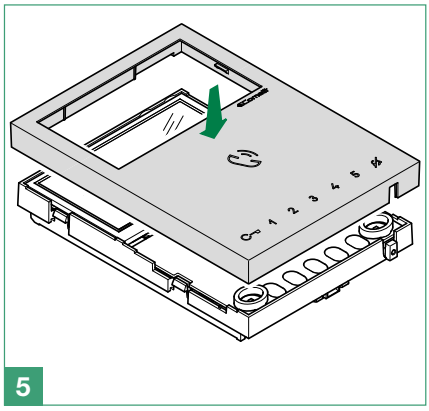

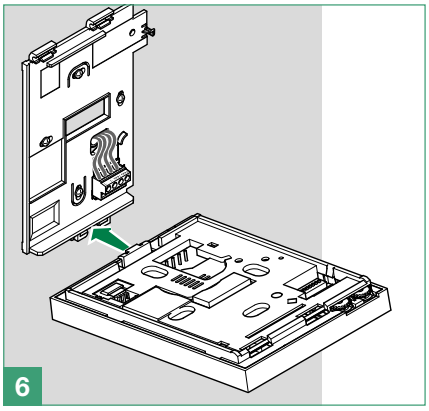

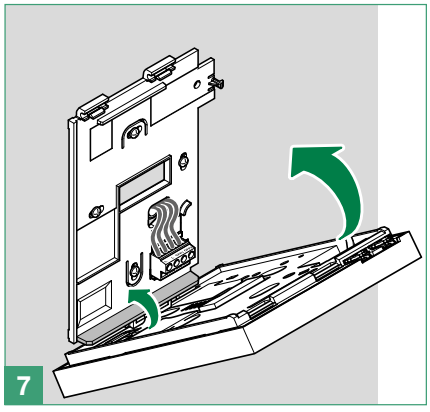

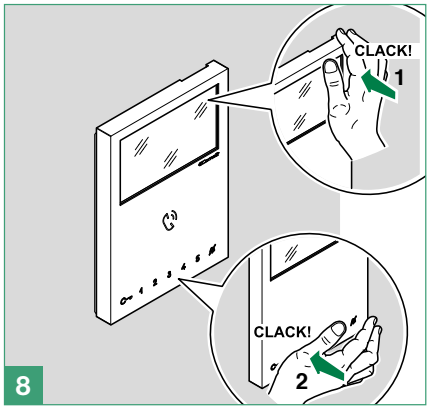

Table of contents

Warning

Monitor description 259
Soft-touch keys description 260
Indicator LED description 260
Technical specifications 261
Art. 6700 261
Art. 6701 262
Installation 264
Removing / Fitting the terminal 265
Connections 265
Monitor configuration 266
Standard configuration for soft-touch keys 266
Configuration of Main and Secondary internal units - Dip 8 of S2 267
Power supply configuration and management - Dip 7 of S2 267
Advanced monitor configuration 268
Warning 268
Programming for intercom call 268
Programming/deleting intercom address (selective intercom only) 268
Programming buttons for intercom call 269
Direct programming of intercom call 270
Programming keys for generic or coded actuator 271
Programming buttons for other functions 272
Programming range 273
Monitor ringtone selection 273
Programming reset 274
System performance and layouts 274

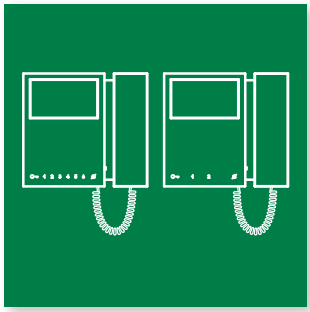

Mini door entry monitor with handset Art. 6701 / 6700

Monitor description

The Mini Cornetta series is comprised of monitors with handsets that can be used in "Building Kit" (exclusively 2-wire), Simplebus Top and Kit Video systems

- *Article 6700W is a black and white monitor equipped as standard with 4 buttons (4 additional buttons can be added with the accessory Art. 6733W.*
- *Article 6701B is a colour monitor equipped as standard with 8 buttons.*
- *Article 6701W is a colour monitor equipped as standard with 4 buttons (4 additional buttons can be added with the accessory Art. 6733W).*
- *Article 6700W/BM is a black and white monitor equipped as standard with 4 buttons (4 additional buttons can be added with the accessory Art. 6733W) and induction loop. Not supplied with backplate 6710.*
- *Article 6701B/BM is a colour monitor equipped as standard with 8 buttons and induction loop. Not supplied with backplate 6710.*
- *Article 6701W/BM is a colour monitor equipped as standard with 4 buttons (4 additional buttons can be added with the accessory Art. 6733W) and induction loop. Not supplied with backplate 6710..*

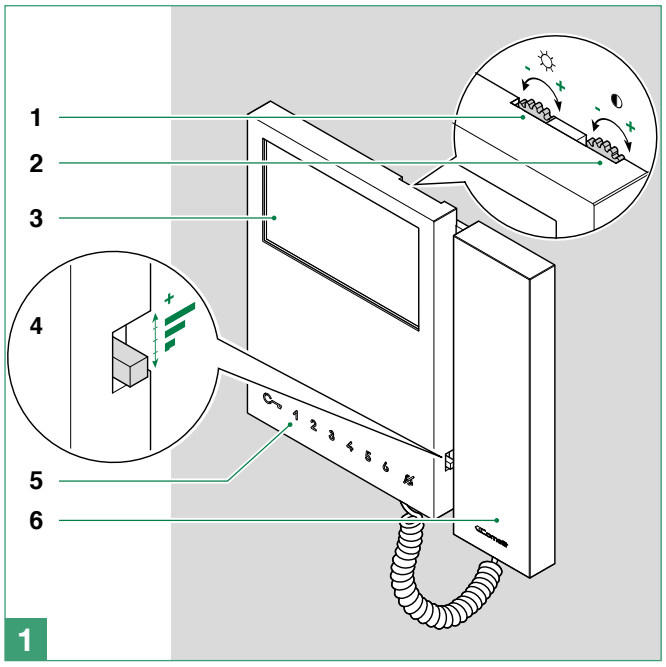

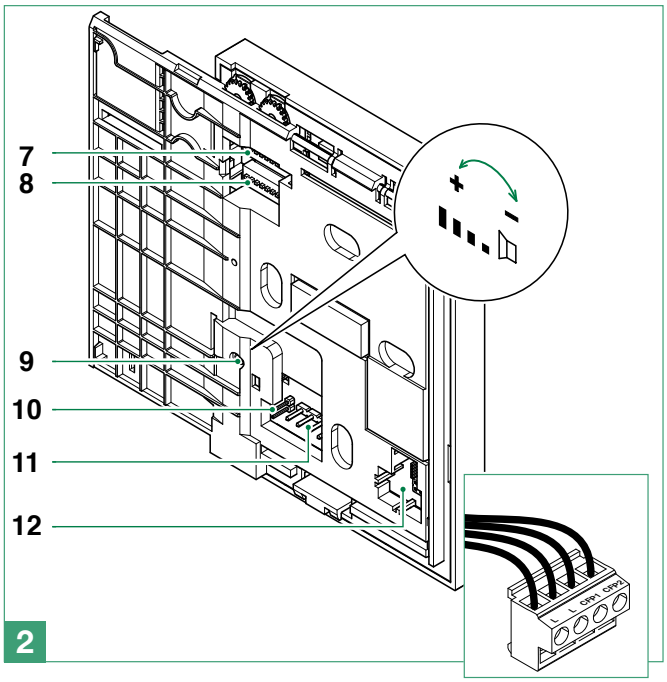

1. Brightness control

- ▶ To increase the value, turn clockwise

2. Colour intensity adjustment for Art. 6701
Contrast adjustment for B/W monitor Art. 6700

- ▶ To increase the value, turn clockwise

3. 4.3'' LCD screen (in colour for Art. 6701, B/W for Art. 6700)

4. Call volume adjustment (high - medium - low)

5. Soft-touch keys

6. Monitor handset (lift handset to start communication)

Do not press and hold the audio hook while the handset is lifted

7. S1 Microswitches for user code programming (see **"addressing table"**)

8. S2 Microswitches for button and function programming microswitches (marked with a red corner)

DIP 1-2-3-4 for button function programming

DIP 5-6 access to programming

DIP 7 for management of power supply voltage, see**"Power supply configuration and management - Dip 7 of S2"**

DIP 8 for main and secondary monitor setting, **"Configuration of Main and Secondary internal units - Dip 8 of S2"**

9. Loudspeaker volume adjustment (for setting intercom audio only)

10. CV5 Video closing jumper
In systems with more than one monitor connected in cascade, only the monitor furthest away must have CV5 closed..

11. Pin for securing terminal block

12. Space for housing the operation accessory for keys 3 4 5 6 (standard on all black monitors, available to purchase separately for white monitors Art. 6733W)

Terminal block for system connection

LL Bus line connection terminals

CFP1 CFP2 Floor door call input

Soft-touch keys description

▶ Press the desired key once to activate the function associated with it

Wait for approximately 1 sec. before pressing the same key again. Pressing the same key several times in quick succession will cancel the command.

Lock-release key
1 Key 1 Actuator function (programmable)
2 Key 2 Self-ignition function (programmable)

Privacy key
3 4 5 6 Keys (programmable) present as standard on all black monitors (for white monitors the KIT with additional buttons Art. 6733W is available to purchase separately)

Indicator LED description

Lock-release LED
slow flashing: door open;
1 flash after pressing: door opening confirmation;
continuous flashing: call in progress.

Privacy LED (red)
steady: privacy function enabled
3 flashes (every 5 sec.): doctor function enabled
continuous flashing: device in programming mode
4 flashes: system engaged

The monitor Art. 3701/6700 is designed for use in colour systems, in the SB2 section downstream of Art. 4888C, or in systems without mixer, such as the system with 2-wire KIT or Art. 1210.

Technical specifications

Art. 6700

MAIN SPECIFICATIONS	6700W	6700W/BM
Audio/video system	Yes	Yes
Wall-mounted	Yes	Yes
Desk base-mounted	Yes	Yes
Hands-free function	No	No
Induction loop function	-	Yes
Type of display	LCD	LCD
Display size (inches)	4,3" 16/9	4,3" 16/9
Display resolution (H x V)	480x272pixel	480x272pixel
B/W or colour display	B/W	B/W
Product colour	White	White
Sensitive Touch technology	Yes	Yes
Total buttons	4	4
Additional buttons	4	4
LED signaling	2	2
Backlighting color	White	White
FUNCTIONS		
Actuator control function	Yes	Yes
Self-ignition	Yes	Yes
Switchboard call function	Yes	Yes
Panic call	Yes	Yes
Intercom function	Yes	Yes
Selective intercom call	Yes	Yes
Call to multiple addresses	Yes	Yes
Call forwarding	Yes	Yes
Privacy function	Yes	Yes
Doctor	Yes	Yes
Floor door call function	Yes	Yes
Electronic bell	Yes	Yes
Customisable ringtone	Yes	Yes
HARDWARE SPECIFICATIONS		
Removable terminals	Yes	Yes
SETTINGS		
Loudspeaker volume control	Yes	Yes
Microphone volume control	Yes	Yes
Ringtone volume control	Yes	Yes
Display brightness control	Yes	Yes
Display contrast control	Yes	Yes
Display colour control	No	No
GENERAL INFO		
Product height (mm)	160	160
Product width (mm)	175	175
Product depth (mm)	22	22

TECHNICAL SPECIFICATIONS	6700W	6700W/BM
Power supply voltage	22÷28Vdc	22÷28Vdc
Maximum current absorption (mA)	200	200
IP Rating	30	30
Operating temperature (°C)	-5÷40	-5÷40
Relative humidity for operation	25 - 75 %	25 - 75 %
Video encoding	PAL / NTSC	PAL / NTSC
Product weight (g)	0,65	0,65
Clamps	L L CFP1 CFP2	L L CFP1 CFP2

Art. 6701

MAIN SPECIFICATIONS	6701B	6701B/BM	6701W	6701W/BM
Audio/video system	Yes	Yes	Yes	Yes
Wall-mounted	Yes	Yes	Yes	Yes
Desk base-mounted	Yes	Yes	Yes	Yes
Hands-free function	No	No	No	No
Induction loop function	-	Yes	-	Yes
Type of display	LCD	LCD	LCD	LCD
Display size (inches)	4,3" 16/9	4,3" 16/9	4,3" 16/9	4,3" 16/9
Display resolution (H x V)	480x272pixel	480x272pixel	480x272pixel	480x272pixel
B/W or colour display	Color	Color	Colors	Color
Product colour	Black	Black	White	White
Sensitive Touch technology	Yes	Yes	Yes	Yes
Total buttons	8	8	4	4
Additional buttons	Yes	Yes	4	4
LED signaling	2	2	2	2
Backlighting color	White	White	White	White
FUNCTIONS				
Actuator control function	Yes	Yes	Yes	Yes
Self-ignition	Yes	Yes	Yes	Yes
Switchboard call function	Yes	Yes	Yes	Yes
Panic call	Yes	Yes	Yes	Yes
Intercom function	Yes	Yes	Yes	Yes
Selective intercom call	Yes	Yes	Yes	Yes
Call to multiple addresses	Yes	Yes	Yes	Yes
Call forwarding	Yes	Yes	Yes	Yes
Privacy function	Yes	Yes	Yes	Yes
Doctor	Yes	Yes	Yes	Yes
Electronic bell	Yes	Yes	Yes	Yes
Customisable ringtone	Yes	Yes	Yes	Yes
HARDWARE SPECIFICATIONS				
Removable terminals	Yes	Yes	Yes	Yes

SETTINGS	6701B	6701B/BM	6701W	6701W/BM
Loudspeaker volume control	Yes	Yes	Yes	Yes
Microphone volume control	Yes	Yes	Yes	Yes
Ringtone volume control	Yes	Yes	Yes	Yes
Display brightness control	Yes	Yes	Yes	Yes
Display contrast control	No	No	No	No
Display colour control	Yes	Yes	Yes	Yes
GENERAL INFO				
Product height (mm)	160	160	160	160
Product width (mm)	175	175	175	175
Product depth (mm)	22	22	22	22
TECHNICAL SPECIFICATIONS				
Power supply voltage	22÷28Vdc	22÷28Vdc	22÷28Vdc	22÷28Vdc
Maximum current absorption (mA)	200	200	200	200
IP Rating	30	30	30	30
Operating temperature (°C)	-5÷40	-5÷40	-5÷40	-5÷40
Relative humidity for operation	25 - 75 %	25 - 75 %	25 - 75 %	25 - 75 %
Video encoding	PAL / NTSC	PAL / NTSC	PAL / NTSC	PAL / NTSC
Product weight (g)	0,65	0,65	0,65	0,65
Clamps	L L CFP1 CFP2	L L CFP1 CFP2	L L CFP1 CFP2	L L CFP1 CFP2

Installation

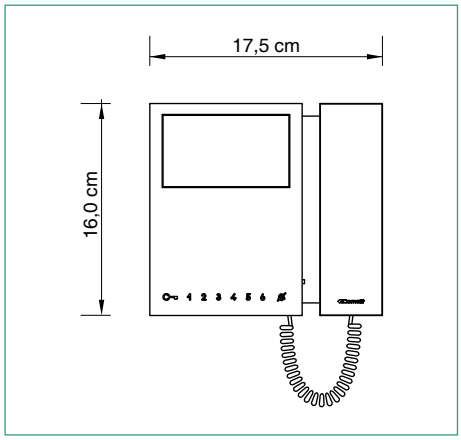

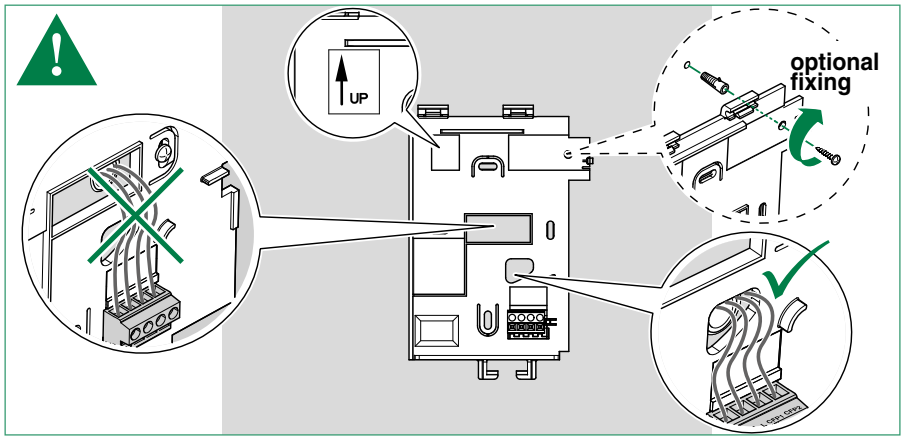

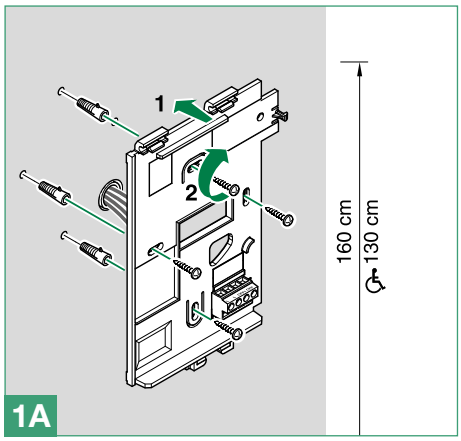

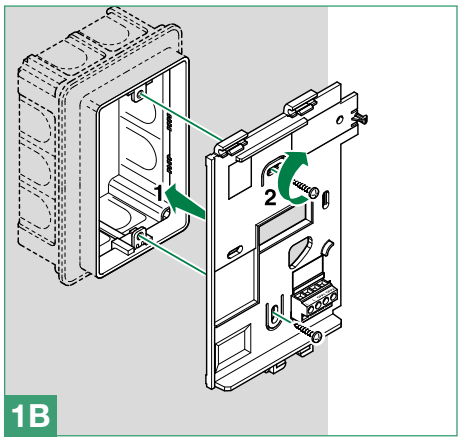

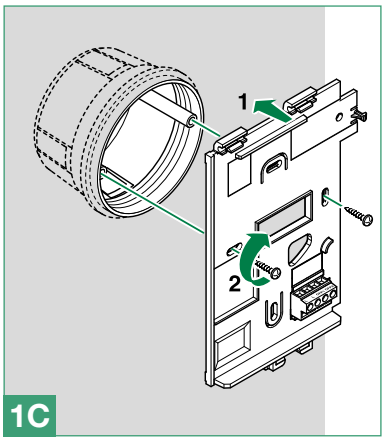

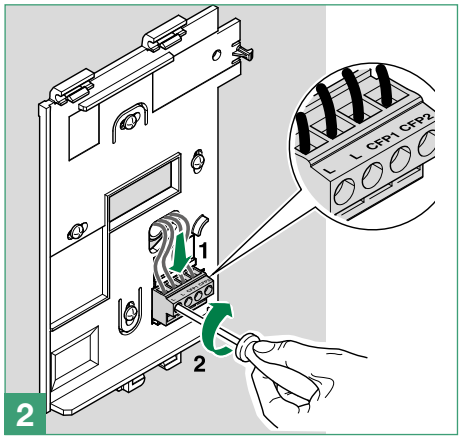

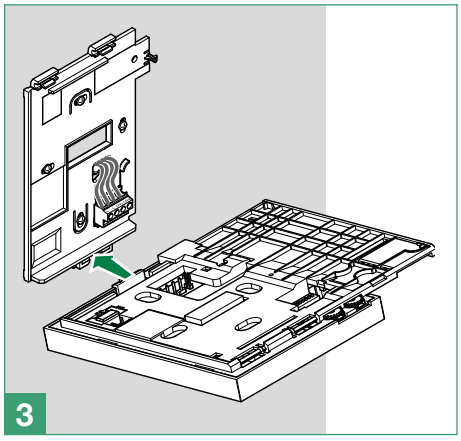

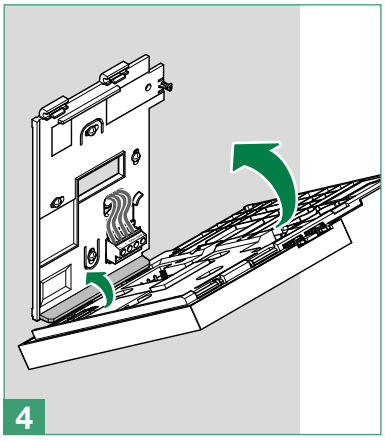

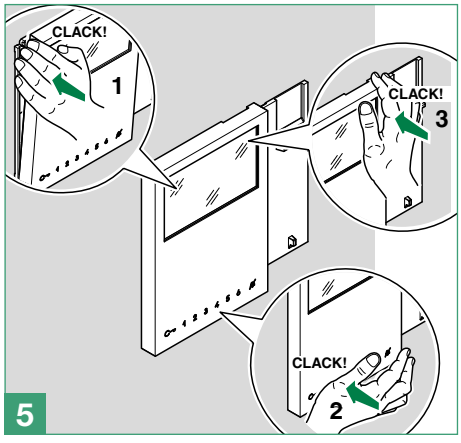

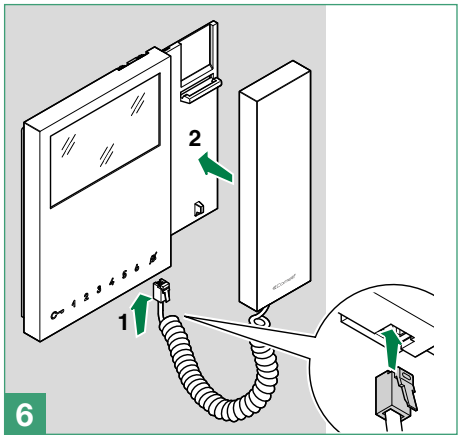

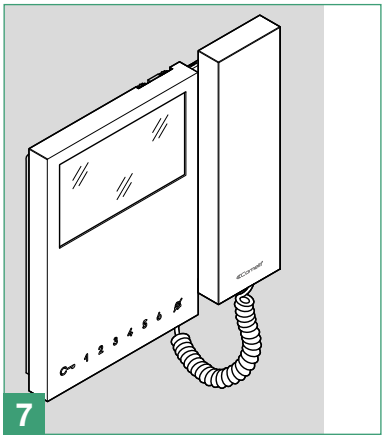

Removing / Fitting the terminal

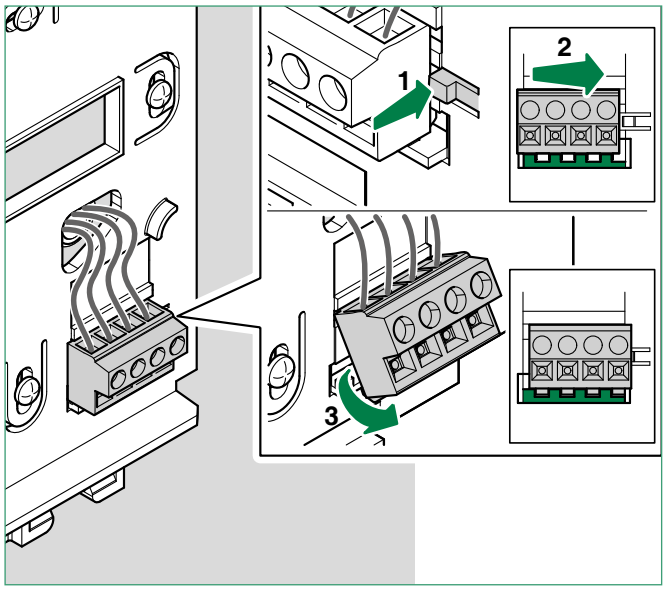

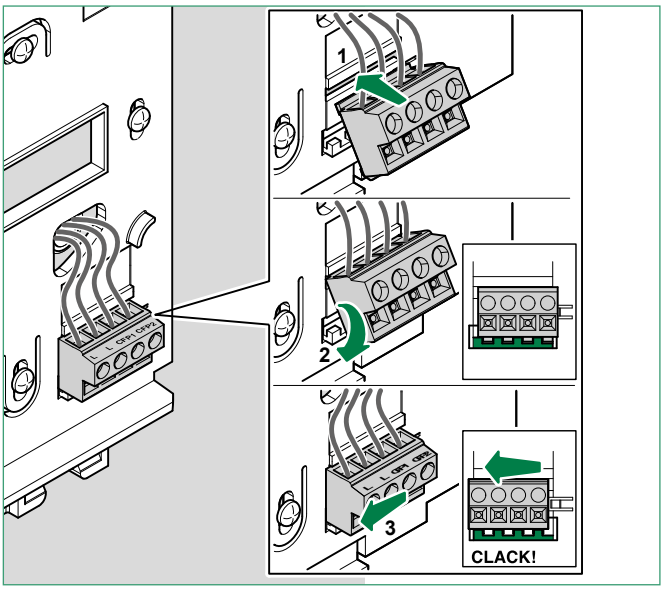

Connections

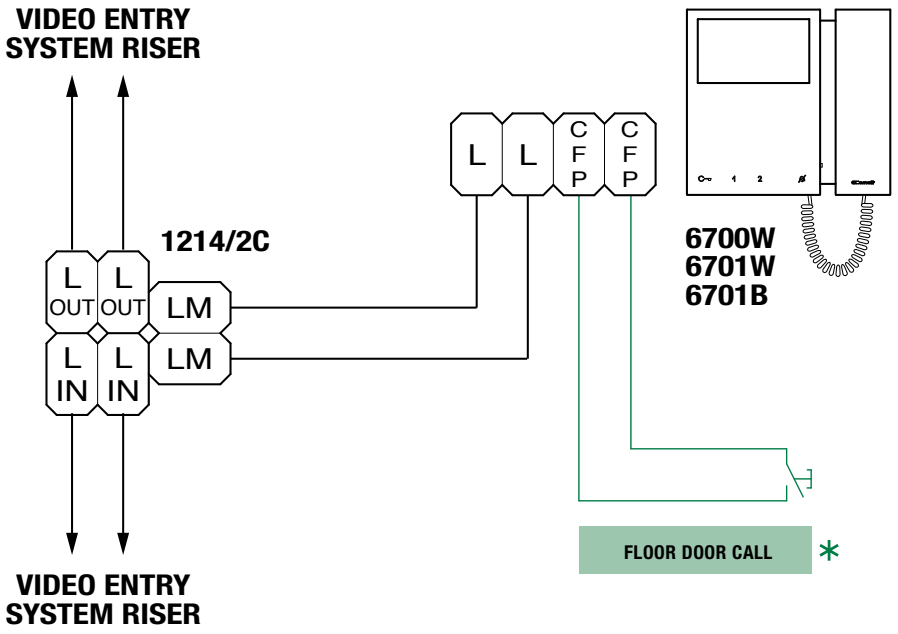

* **20 m MAX** - Use shielded cable for the connection and do not route the cables in the vicinity of heavy inductive loads or power supply cables (230V/400V).
Where multiple door-entry phones or monitor backplates have the same user code, connect the CFP button on one only; all the devices will ring simultaneously.

Monitor configuration

Standard configuration for soft-touch keys

DIP S2							Art. (6700W / 6700W/BM / 6701W / 6701W/BM) + Art. 6733W / Art. 6701B / 6701B/BM			
DIP 1	DIP 2	DIP 3	DIP 4	P1	P2	🔑	P3	P4	P5	P6
0	0	0	0	ACT	AI		CCS	D	PAN	K
1	0	0	0	CCS	AI	🔑	INT	INTb	D	ACT
0	1	0	0	INT	AI		INTb	ACT	CCS	CCP
1	1	0	0	ACT	CCS		CCP	PAN	K	D
0	0	1	0	ACT	ACT	ACT	ACT	ACT	ACT	ACT
1	0	1	0	INT	ACT		CCS	CCP	INTb	PAN
0	1	1	0	AI	D		K	CCS	CCP	INTb
1	1	1	0	INTb	INT		AI	INT	PAN	D
0	0	0	1	CCS	PAN		D	AI	INT	INTb
1	0	0	1	K	CCS	🔑	PAN	CCP	AI	INT
0	1	0	1	CCP	K		PAN	ACT	INT	AI
1	1	0	1	PAN	CCP		CCS	K	ACT	D
0	0	1	1	INTb	AI		INT	ACT	D	CCS
1	0	1	1	INT	INT		INT	INT	INT	INT
0	1	1	1	NULL	NULL	NULL	NULL	NULL	NULL	NULL
1	1	1	1	PROG						

Standard configuration for DIP switches 1-2-3-4 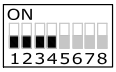

	Legend
🔑	Lock- release
ACT	Actuator
AI	Self-ignition
CCP	Main switchboard call – not for use in systems with KIT
CCS	Secondary switchboard call – not for use in systems with KIT
K	Guardian doorentry phone call
D	Doctor
PAN	Panic – not for use in systems with KIT
INT	Programmable intercom, general or selective - standard singlefamily calling for KIT and Simplebus Top
INTb	Two-family intercom - for KIT only
NULL	No function
PROG	Programmed functions, see Advanced monitor configuration. In this Dip switch setting, the buttons control the programmed functions; the NON-programmed buttons control functions referred to on line 0000 (default).

Configuration of Main and Secondary internal units - Dip 8 of S2

- To configure an internal unit as the main unit, set **DIP8** of **S2** to **OFF**.
- To configure an internal unit as a secondary unit, set **DIP8** of **S2** to **ON**.

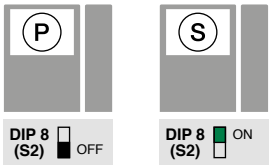

In systems with Art. 1209 or Art. 1210, you can configure a maximum of 1 main monitor, while in systems with Art. 4888C you can configure a maximum of 2 main monitors.

Power supply configuration and management - Dip 7 of S2

- For correct power management, the DIP switch should be set in accordance with the type of system and its configuration:
- **in systems with power supply units 1209 and1210:** always set the DIP switch to **ON**
- **iin systems with power supply unit 4888C:** for secondary internal units, always set the DIP switch to **OFF**, for main internal units, follow the indications given in the examples in the figure below:

  A. 1 main internal unit,

  B. 2 main internal units.

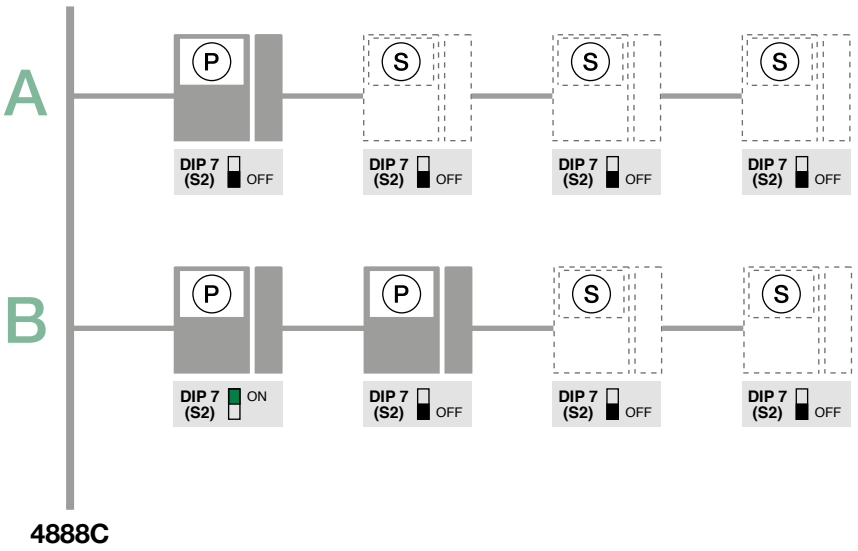

Advanced monitor configuration

Warning

If the default settings (see table **"Standard configuration for soft-touch keys"**) do not reflect requirements, the keys can be programmed differently by carrying out the steps below.
At the end, set S2 DIP switches 1-2-3-4 to the combination 1111 (PROG setting in the configuration tables "Advanced monitor configuration"). In this dip switch setting, the keys control the programmed functions; the NON-programmed keys control functions referred to on line 0000 (see table "Standard configuration for soft-touch keys"). Restore the user code setting on S1, see "addressing table".

Programming for intercom call

General intercom: function allowing calls to one or more internal units identified by the same call address as used by the external unit.
Selective intercom: function allowing calls to one or more internal units identified by a dedicated call address (see table B) which is different from the one used by the external unit.
General and selective intercoms CANNOT be used together on the same riser.

Programming/deleting intercom address (selective intercom only)

Take note of the S2, S1 setting and restore it when programming is complete

1)	2)	3)	
Programming; set code, TABLE B **S1** 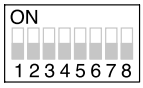	**S2 DIP** 1 2 3 4 5 6 0 0 0 1 1 1 **S2** 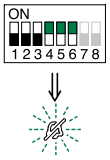	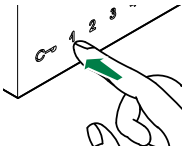	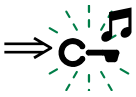
Cancellation **DIP ON** **S1** 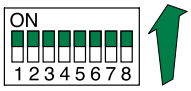	**S2 DIP** 1 2 3 4 5 6 1 1 1 1 1 1 **S2** 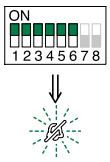	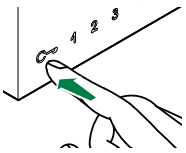	

Selective intercom addresses

You must set the intercom address on all the riser's internal units.
You can assign the same intercom address to a maximum of 3 internal units.
For group calls, select the desired intercom codes simultaneously (max. 3).

TAB. B

Code	Dip switch ON	S1	Code	Dip switch ON	S1
1	1		5	5	
2	2		6	6	
3	3		7	7	
4	4		8	8	

Comelit

Programming buttons for intercom call

DIP S2							Art. (6700W / 6700W/BM / 6701W / 6701W/BM) + Art. 6733W Art. 6701B / 6701B/BM				DIP S1
DIP 1	DIP 2	DIP 3	DIP 4	P1	P2		P3	P4	P5	P6	
0	0	0	0								
1	0	0	0				**INT**	**INTb**			
0	1	0	0	**INT**			**INTb**				
1	1	0	0								
0	0	1	0								
1	0	1	0	**INT**					**INTb**		
0	1	1	0							**INTb**	ADDRESS
1	1	1	0	**INTb**	**INT**			**INT**			ON 12345678
0	0	0	1						**INT**	**INTb**	
1	0	0	1							**INT**	
0	1	0	1						**INT**		
1	1	0	1								
0	0	1	1	**INTb**			**INT**				
1	0	1	1	**INT**	**INT**		**INT**	**INT**	**INT**	**INT**	
0	1	1	1								
1	1	1	1	PROG							

Example 1 - all systems (INCLUDING KITS!) - General intercom
on a monitor with user code 5, P3 programming = general internal call, P4 = general intercom with address 9

Example 2 - Selective intercom
on a monitor with user code 1 and intercom address 1, P3 programming = selective intercom with address 2, P4 = selective intercom with address 3

1. Set S2 DIP switch 6 to the combination 01.
   - » the privacy LED flashes.

S2 DIP						S2			
1	2	3	4	5	6		ON 12345678	⇒	
0	0	0	0	0	1				

2. Refer to the table **"Programming buttons for intercom call"** and select a combination in which the intercom function (either INT or INTb) is listed for the keys you wish to program.
   E.g. 1: for P3= general internal call, set S2 DIP switches 1-2-3-4 to the combination 1000 or 0011 or 1011 (P3=INT), set S1 with address 5 in accordance with **Addressing table**, go to point 3.
   E.g. 1: for P4= general intercom, set S2 DIP switches 1-2-3-4 to the combination 1110 or 1011 (P4=INT), set S1 with address 9 in accordance with **"addressing table"**, go to point 3.
   E.g. 2: for P3= single-family intercom, set S2 DIP switches 1-2-3-4 to the combination 1000 or 0011 or 1011 (P3=INT), set S1 with address 2 in accordance with **table B**, go to point 3.
   E.g. 2: for P4= selective intercom, set S2 DIP switches 1-2-3-4 to the combination 1110 or 1011 (P4=INT), set S1 with address 3 in accordance with **table B**, go to point 3.
3. Press and release the key to be associated with the function
   - » the lock-release LED lights up.
   - » a confirmation tone will sound.
4. To exit programming mode, set S2 DIP switches 5-6 to the combination 00
   - ▶ the privacy LED switches off
5. **When programming is complete, set S2 DIP switches 1-2-3-4 to the combination 1111. Restore the user code setting on S1, see "addressing table".**

Direct programming of intercom call

Allows direct programming of intercom call via the internal units.

✓ Requires 2 operators

Step 1: enter programming mode

Operator 1 and Operator 2 carry out the following procedures on 2 internal units:

1. Set S2 DIP switches 1-2 -3-4 to the combination 1111
2. Lift the handset
3. Press and hold the privacy and lock-release keys for 3 sec.
   - » The internal unit emits 1 tone.
   - » The privacy LED flashes.
   - » The internal unit enters audio mode.
   - » At this point the 2 operators will be communicating with each other.

Step 2: intercom call programming

Operator 1:

▶ Press the key you want to program to call operator 2 (e.g. 2).

» The internal unit manned by operator 1 emits a confirmation tone.

Operator 2:

▶ Press the key you want to program to call operator 1 (e.g. 1).

» The internal unit manned by operator 2 emits a confirmation tone.

Operator 1/ Operator 2:

▶ Hang up the handset.

» The internal unit emits 1 tone.

» Programming of the 2 internal units is now complete.

To program another internal unit, move on to STEP 3.

Step 3: programming other internal units

Operator 1/ Operator 2:

1. Once the new station has been reached, carry out step 1 to begin communication
2. Repeat step 2



NOTE If a call is received during programming, it must be answered and the programming procedure resumed afterwards.

Programming keys for generic or coded actuator

DIP S2							Art. (6700W / 6700W/BM / 6701W / 6701W/BM) + Art. 6733W Art. 6701B / 6701B/BM				DIP S1
DIP 1	DIP 2	DIP 3	DIP 4	P1	P2	🔑	P3	P4	P5	P6	
0	0	0	0	ACT							
1	0	0	0							ACT	
0	1	0	0			🔑		ACT			
1	1	0	0	ACT							
0	0	1	0	ACT	ACT	ACT	ACT	ACT	ACT	ACT	
1	0	1	0		ACT						
0	1	1	0								ADDRESS
1	1	1	0								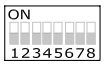
0	0	0	1								
1	0	0	1			🔑					
0	1	0	1					ACT			
1	1	0	1						ACT		
0	0	1	1					ACT			
1	0	1	1								
0	1	1	1								
1	1	1	1	PROG							

Example:
on a monitor with user code 5, P1 programming = generic actuator, P2 = coded actuator (code 125)

Take note of the DIP-switch settings

1. Set S2 DIP switch 6 to the combination 01.

» the privacy LED flashes.

S2 DIP						S2		
1	2	3	4	5	6			
0	0	0	0	0	1		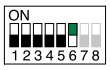	⇒ 

2. Refer to the table **"Programming keys for generic or coded actuator"** and select a combination in which the actuator function (ACT) is listed for the keys you wish to program.
E.g.: for P1= generic actuator, set S2 DIP switches 1-2-3-4 to the combination 0000 or 1100 or 0010 (P1=ACT), set S1 DIP switches to the combination 11111111, go to point 3.
E.g.: for P2= coded actuator (code 125), set S2 DIP switches 1-2-3-4 to the combination 0010 or 1010 (P2=ACT), set S1 with address 125 in accordance with **"addressing table"**, go to point 3.

3. Press and release the key to be associated with the function.

» the lock-release LED lights up.

» a confirmation tone will sound.

4. To exit programming mode, set S2 DIP switches 5-6 to the combination 00.

» the privacy LED switches off.

5. When programming is complete, set S2 DIP switches 1-2-3-4 to the combination 1111. Restore the user code setting on S1, see "addressing table".

Programming buttons for other functions

DIP S2							Art. (6700W / 6700W/BM / 6701W / 6701W/BM) + Art. 6733W Art. 6701B / 6701B/BM			
DIP 1	DIP 2	DIP 3	DIP 4	P1	P2	🔑	P3	P4	P5	P6
0	0	0	0		AI		CCS	D	PAN	K
1	0	0	0	CCS	AI				D	
0	1	0	0		AI				CCS	CCP
1	1	0	0		CCS		CCP	PAN	K	D
0	0	1	0							
1	0	1	0				CCS	CCP		PAN
0	1	1	0	AI	D		K	CCS	CCP	
1	1	1	0				AI		PAN	D
0	0	0	1	CCS	PAN		D	AI		
1	0	0	1	K	CCS		PAN	CCP	AI	
0	1	0	1	CCP	K		PAN			AI
1	1	0	1	PAN	CCP		CCS	K		D
0	0	1	1		AI				D	CCS
1	0	1	1							
0	1	1	1	NULL	NULL	NULL	NULL	NULL	NULL	NULL
1	1	1	1	PROG						

	Legend
🔑	Lock- release
AI	Self-ignition
CCP	Main switchboard call – not for use in systems with KIT
CCS	Secondary switchboard call – not for use in systems with KIT
K	Guardian doorentry phone call
D	Doctor
PAN	Panic – not for use in systems with KIT
NULL	No function
PROG	Programmed functions

Example:
on a monitor with user code 5, P1 programming = self-ignition, P4 = Secondary switchboard call.

1. Set S2 DIP switch 6 to the combination 01.

» the privacy LED flashes.

S2 DIP						S2	⇒
1	2	3	4	5	6	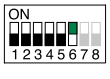	
0	0	0	0	0	1		

2. Refer to the table **"Programming buttons for other functions"** and select a combination in which the desired/necessary functions are listed for the keys you wish to program.
E.g. 1: for P1= self-ignition, P4= switchboard call, set S2 DIP switches 1-2-3-4 to the combination 0110 (P1=AI, P4=CCS).

3. Press and release the keys to which you wish to assign the functions

» the lock-release LED lights up.

» une tonalité de confirmation retentit.

4. To exit programming mode, set S2 DIP switches 5-6 to the combination 00

» the privacy LED switches off.

5. When programming is complete, set S2 DIP switches 1-2-3-4 to the combination 1111.

Programming range

Take note of the S2, S1 setting and restore it when programming is complete

Carry out steps 1 to 4

	1)	2)	3)		4)
Range minimum address	S1 ON 1 2 3 4 5 6 7 8 set code, **"addressing table"**	S2 DIP 1 2 3 4 5 6 / 0 0 0 0 1 0 S2 ON 1 2 3 4 5 6 7 8 ⇓	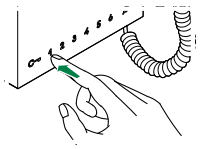		
Range maximum address			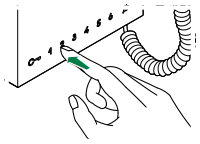		
Enable range			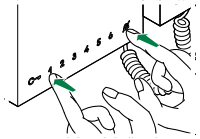		S2 ON 1 2 3 4 5 6 7 8 ⇓
Disable range			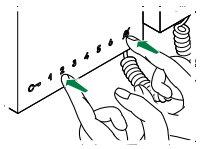		
Deleting the range	DIP ON S1 ON 1 2 3 4 5 6 7 8	S2 DIP 1 2 3 4 5 6 / 1 1 1 1 1 0 S2 ON 1 2 3 4 5 6 7 8 ⇓	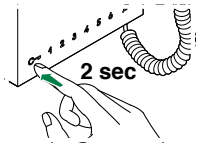		

Monitor ringtone selection

1. Press and hold for 6 sec.
- » a confirmation tone will sound
- » the privacy LED will flash to indicate "programming" mode.

✓ The procedure can only take place while the system is in standby; otherwise the privacy LED will flash 4 times to inform the user that the system is engaged

2. Press and release
Once (1 confirmation tone is emitted) to change the ringtone for calls from the external unit.
Twice (2 confirmation tones are emitted) to change the ringtone for calls from the switchboard.
3 times (3 confirmation tones are emitted) to change the ringtone for intercom calls made from the internal unit.
4 times (4 confirmation tones are emitted) to change the floor door call ringtone.
Any further pressing of the key repeats the sequence described above.

3. Press and release 4 to scroll through the various available ringtones in sequence.

4. Press 2 to confirm selection of the last ringtone heard and to exit (at any time) change monitor ringtone mode.
- » one confirmation tone is emitted
- » the privacy LED switches off

5. Repeat steps 1 to 4 to change the other ringtones.

Programming reset

Factory settings:

- Button functions for the S2 DIP switch 1-2-3-4 combination;
- Intercom address absent;
- Range function and min./max. addresses absent;
- Ringtone reset.

Take note of the S2, S1 setting and restore it when programming is complete

1)	2)	3)
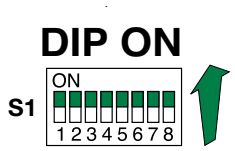	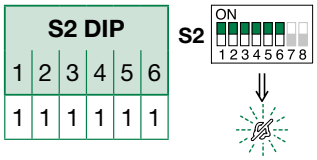	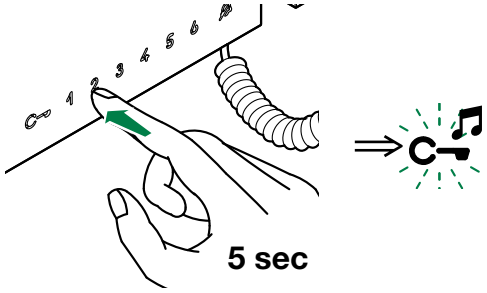

System performance and layouts

For further information of system performance and to view installation layouts, click on the system type that best meets your requirements:

- **Audio/video kit** for the creation of audio-video systems for *individual residences*.
- **Building Kit audio/video system** for the creation of audio-video systems for *small apartment blocks.*
- **SBTOP audio/video system** for the creation of audio-video systems for *residential complexes.*

Table of contents

Warning

Bracket and branch terminal art. 6710 277

Adapter plate Art. 6711W 278

Mounting on residential series box 503 279

Mounting in a round box 279

Adapter plate Art. 6711WS 280

Mounting on residential series box 503 [B] / in a round box [C] 280

Desk-top base Art. 6712A 281

Removing [K] / fitting [Y] the terminal 282

Disassembly 282

Support for external cable routing Art. 6719W 283

Installation Art. 6719W 283

Removal 285

Additional buttons kit Art. 6733W 286

Description Art. 6733W 286

Fitting upgrade Art. 6733W 286

Bracket and branch terminal art. 6710

Accessory for wall-mounting Mini Handset /BM versions in a residential series box (supplied with the Mini versions without /BM)

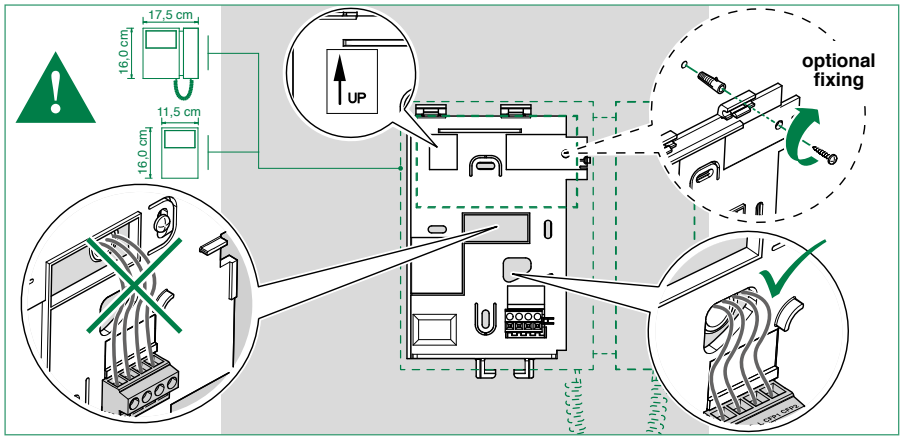

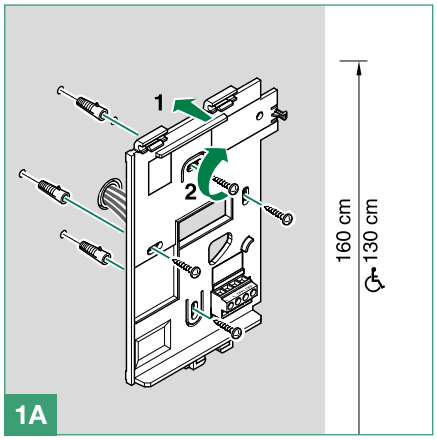

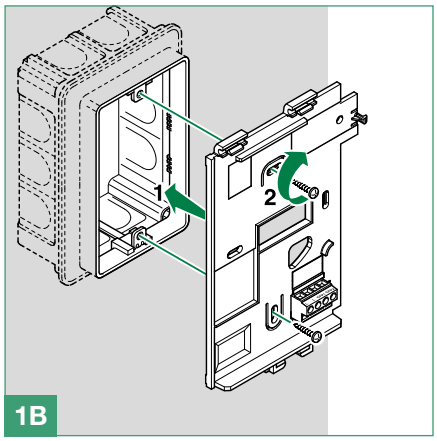

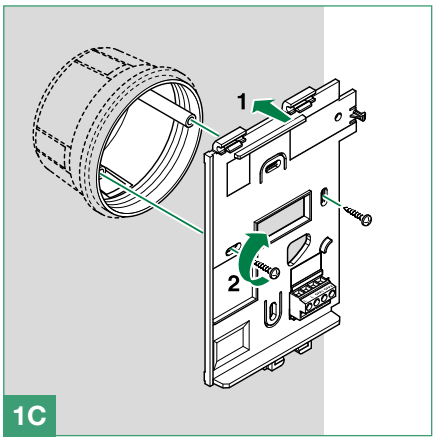

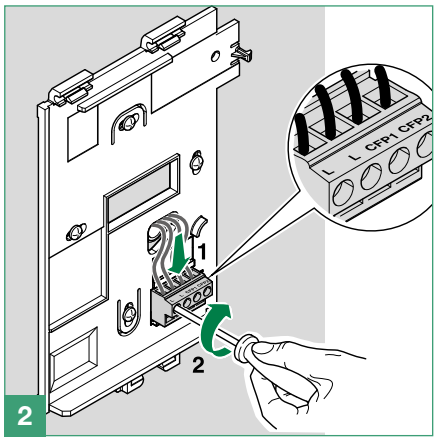

Adapter plate Art. 6711W

*Article **6711W** is an adapter plate used for installation of the Mini Cornetta monitor in replacement of Magis or Genius door entry monitors.*
The accessory is supplied complete with backplate Art. 6710 and distribution terminal Art. 1214/2C.

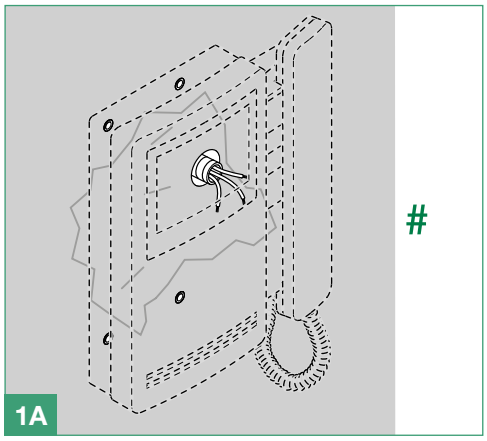

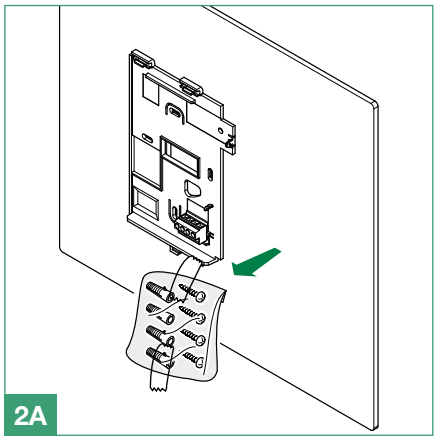

 # If the wall plugs are damaged, make new holes in the wall and use the wall plugs supplied.

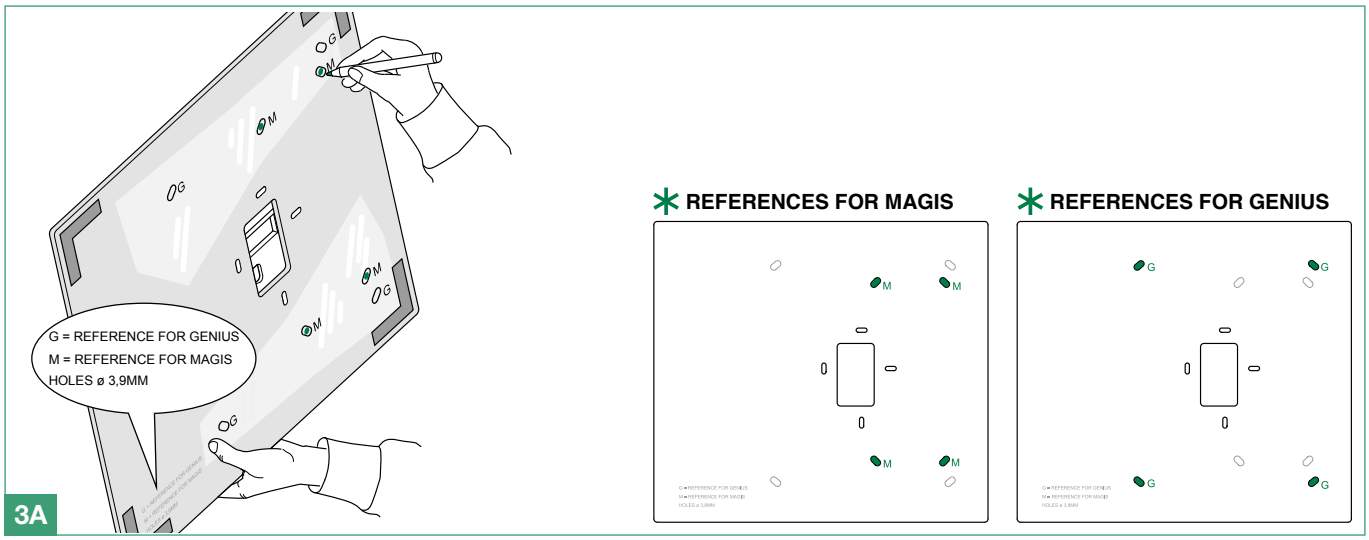

*** Hole positions for Magis/Genius monitor replacement.**

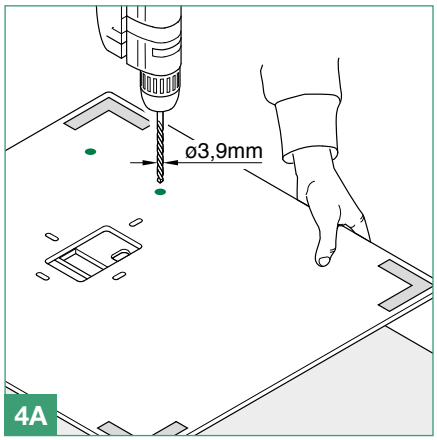

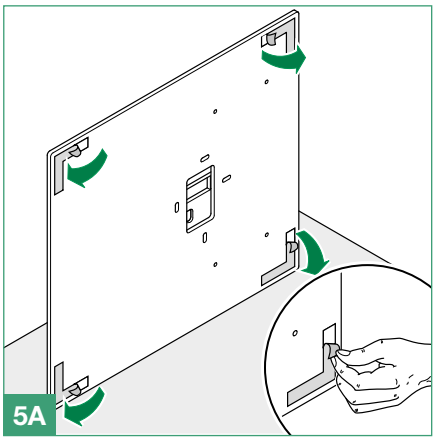

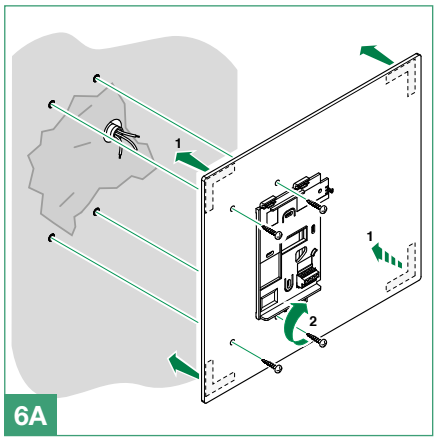

Mounting on residential series box 503

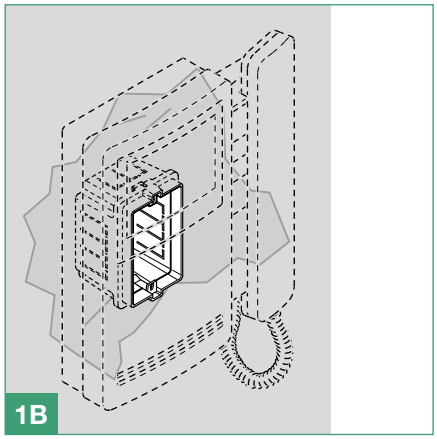

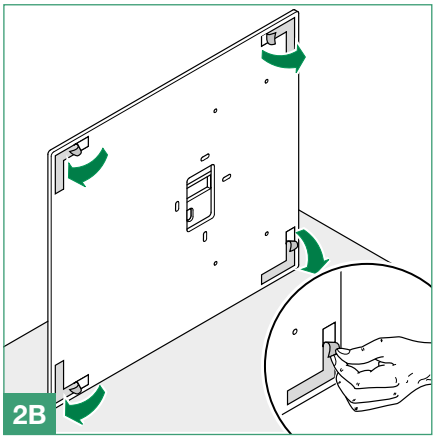

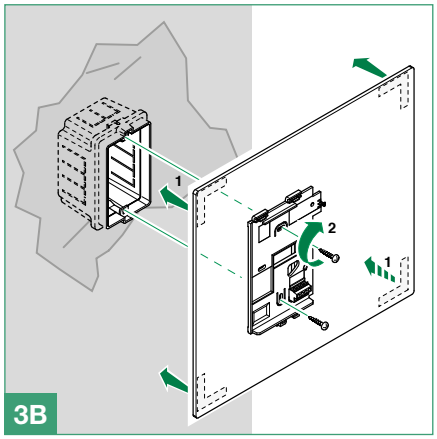

Mounting in a round box

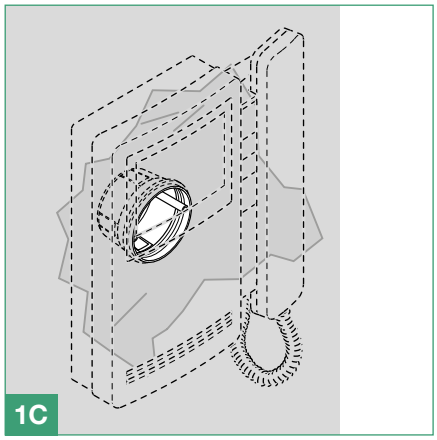

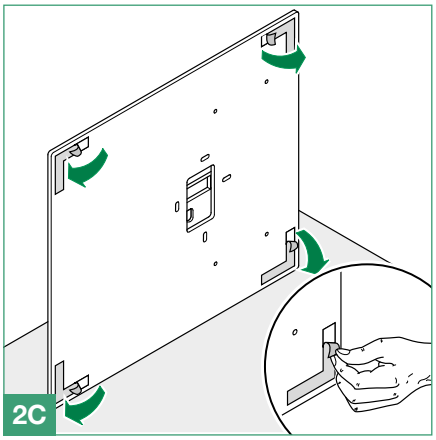

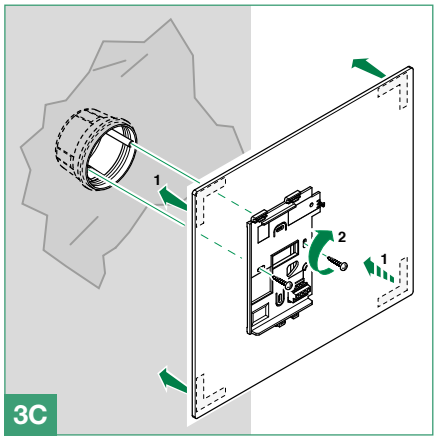

Adapter plate Art. 6711WS

*Article **6711WS** is a compact adapter plate used for installation of the Mini Cornetta monitor in replacement of Magis or Genius door entry monitors.*

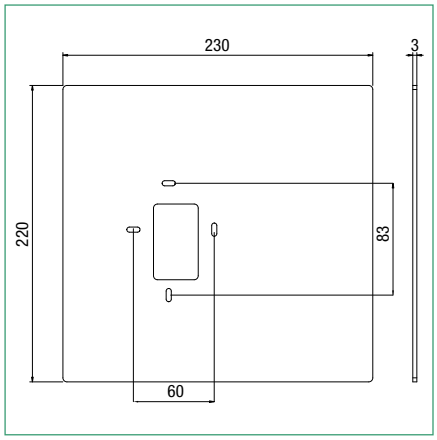

Mounting on residential series box 503 [B] / in a round box [C]

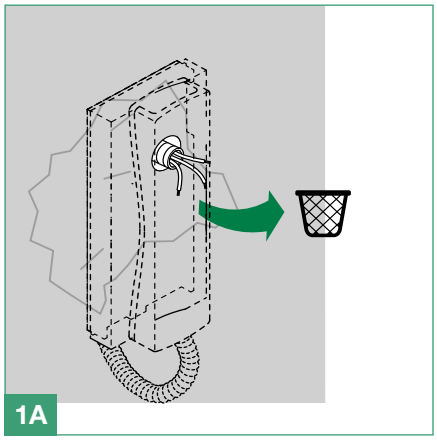

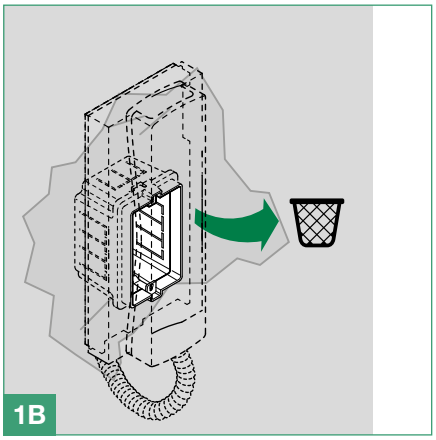

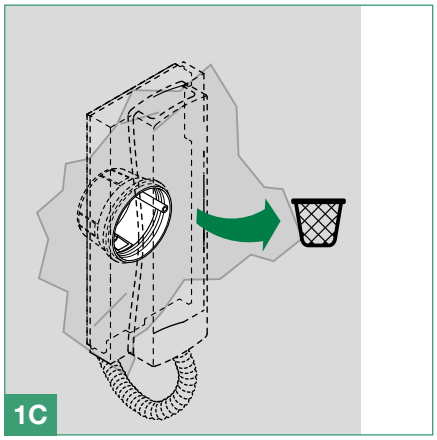

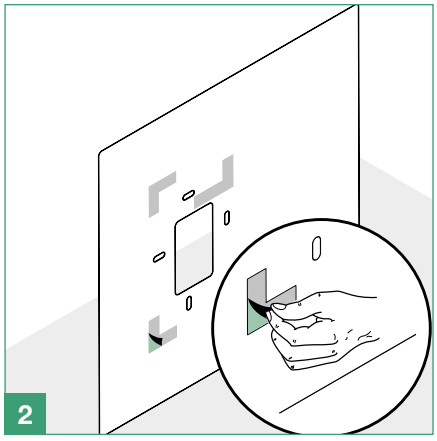

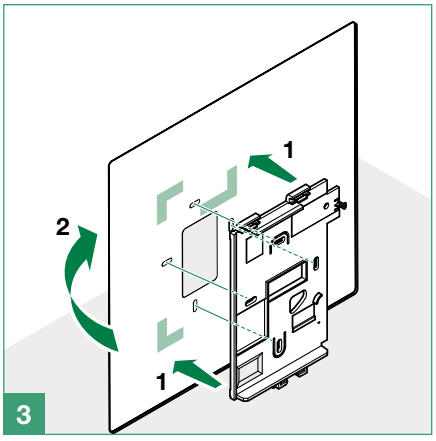

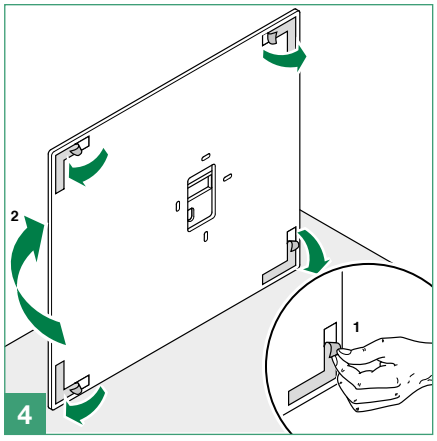

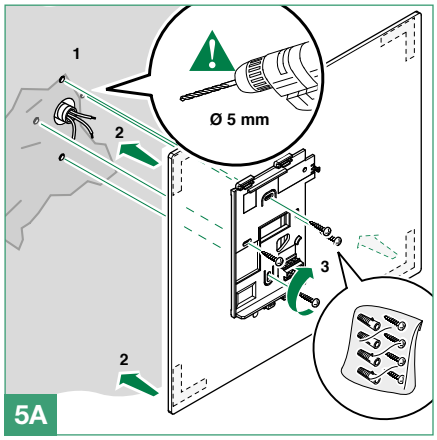

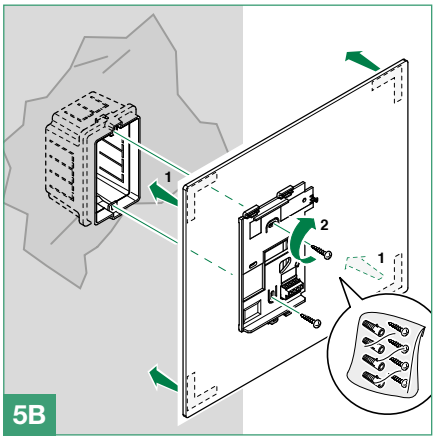

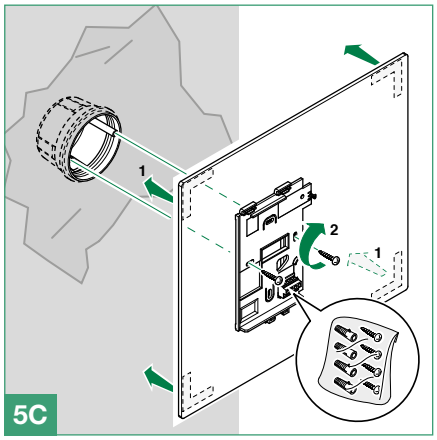

Desk-top base Art. 6712A

Article 6712A is an angle-adjustable desk base for conversion of the Mini Handsfree monitor for desk-top installation.

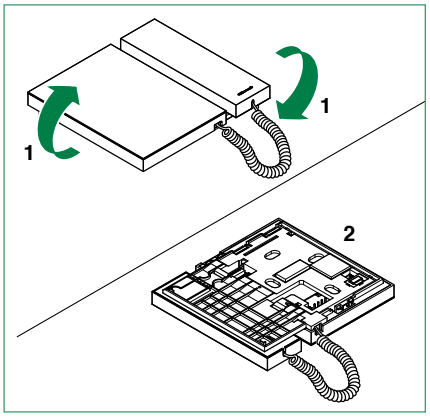

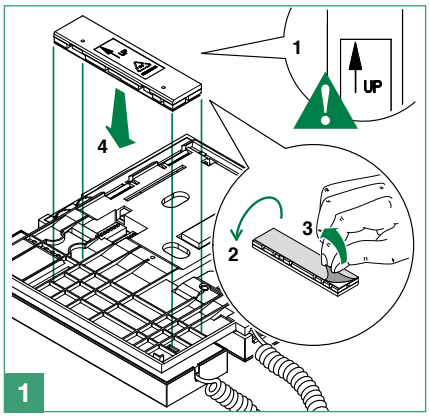

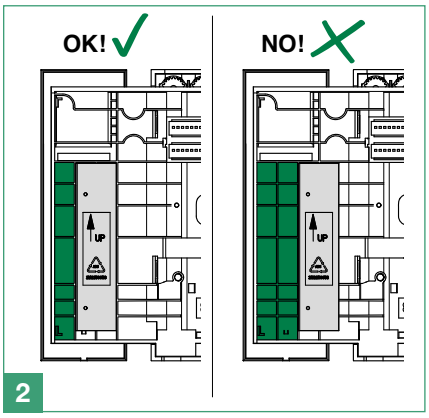

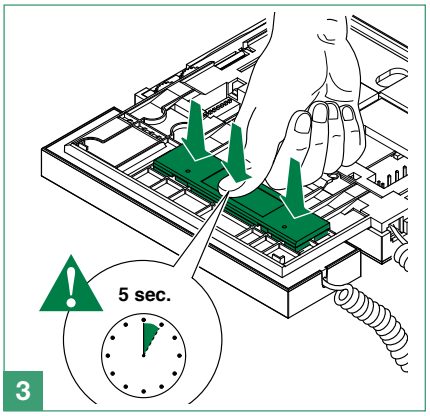

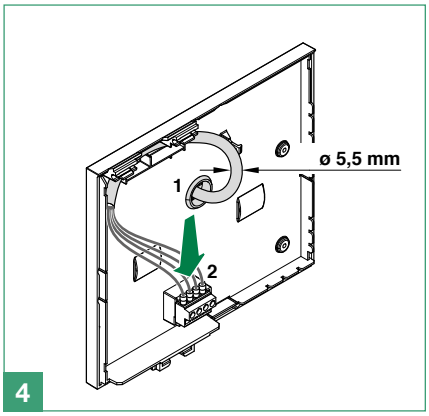

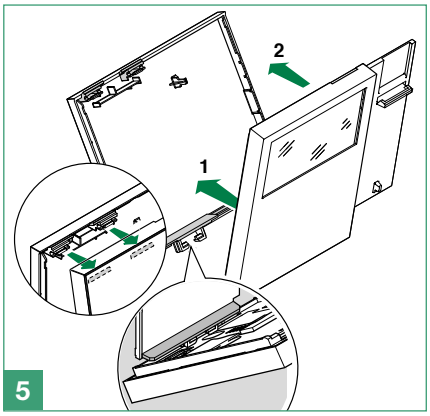

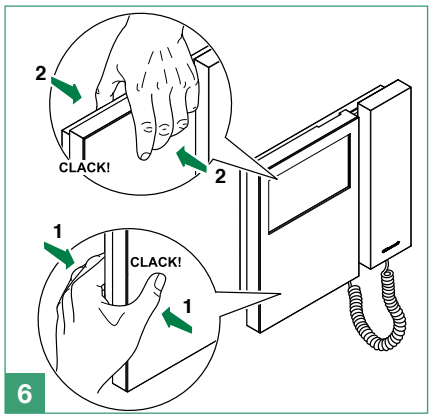

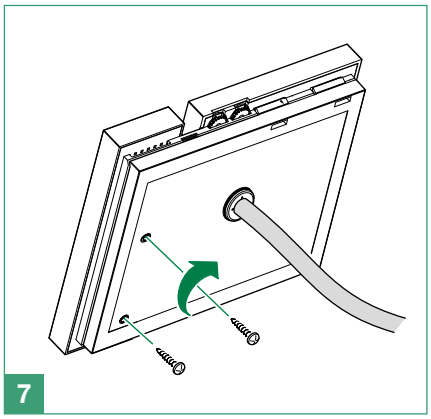

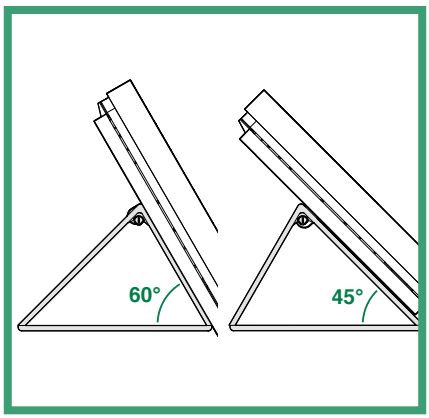

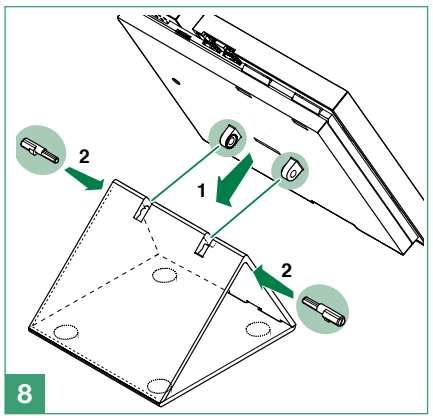

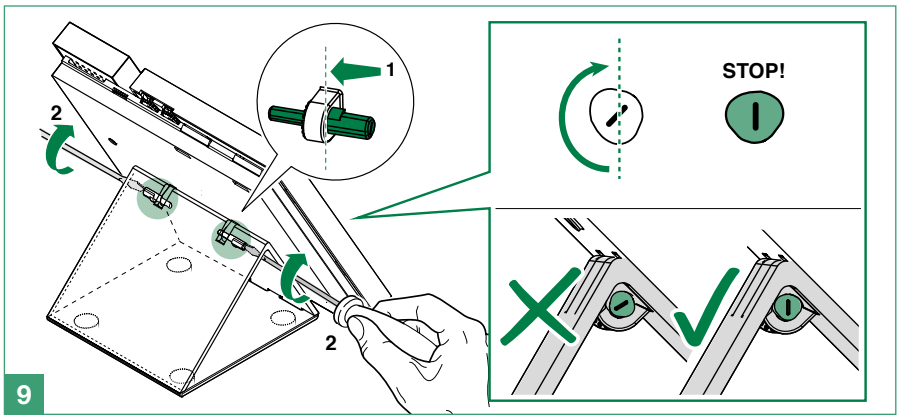

Removing [K] / fitting [Y] the terminal

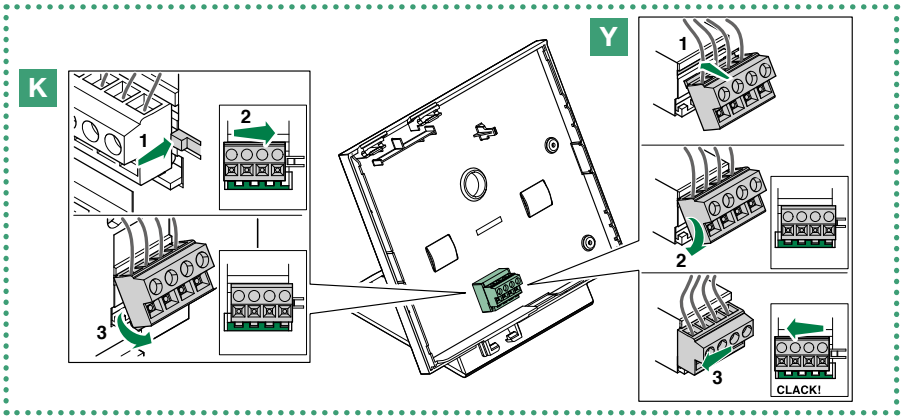

Disassembly

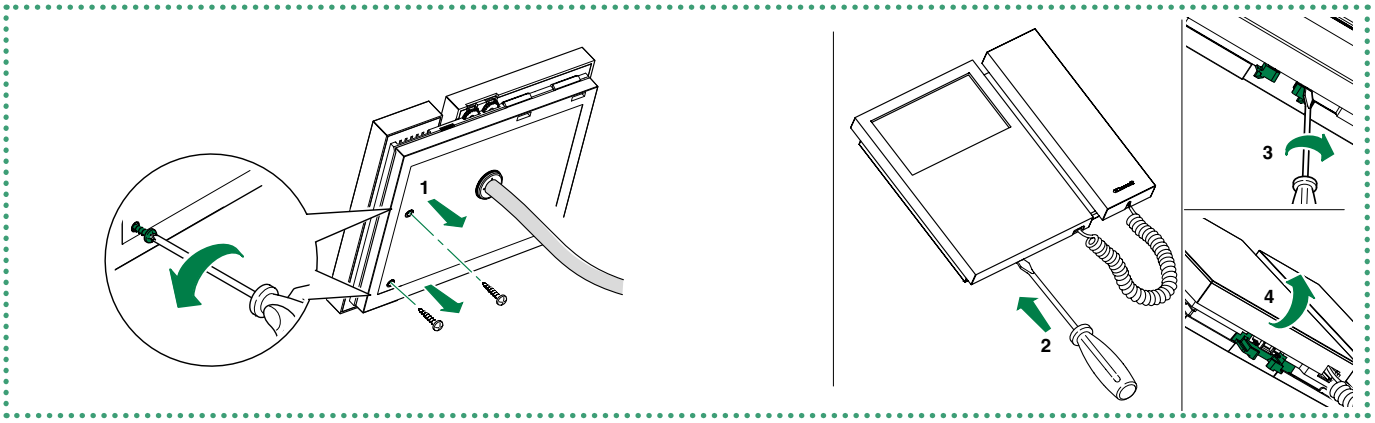

Support for external cable routing Art. 6719W

*Article **6719W** is a wall bracket for Mini Cornetta monitors with provision for external cables.*

Installation Art. 6719W

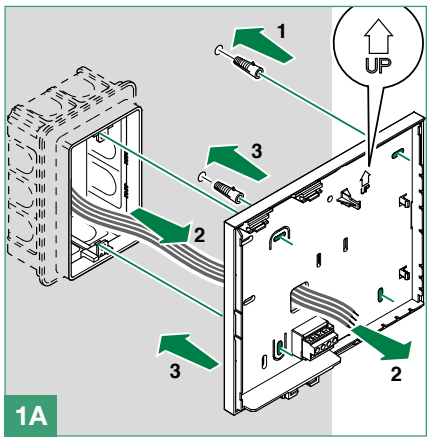

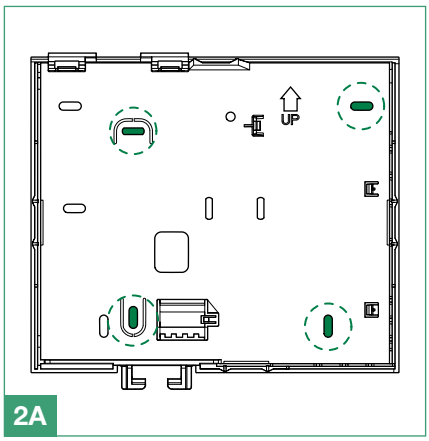

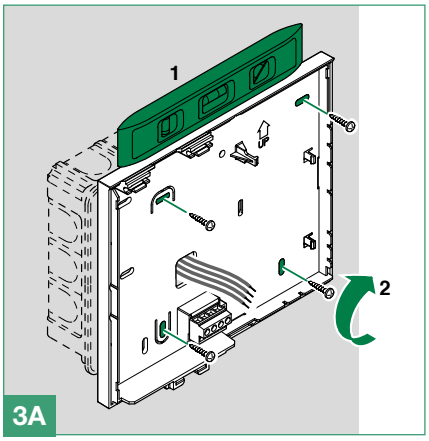

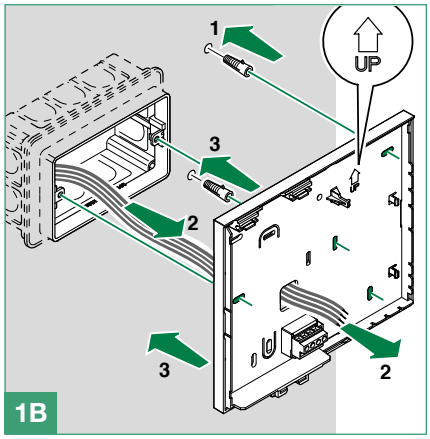

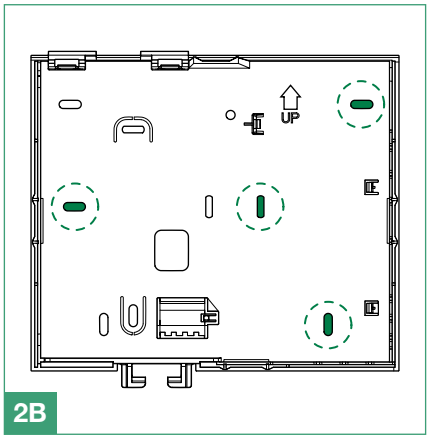

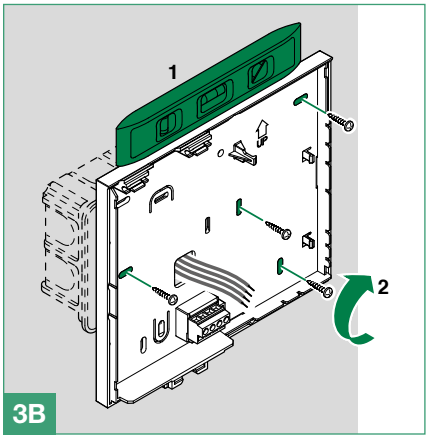

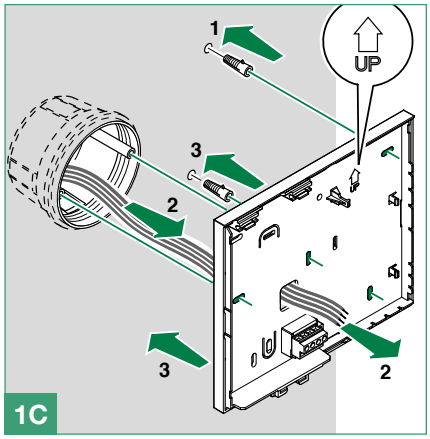

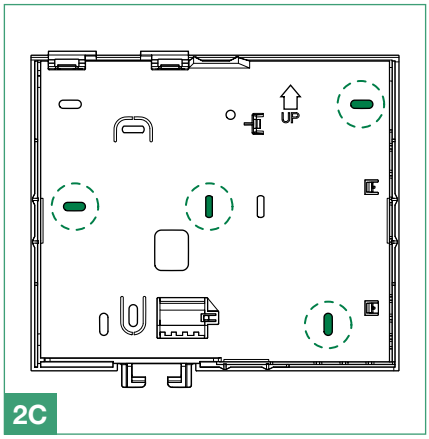

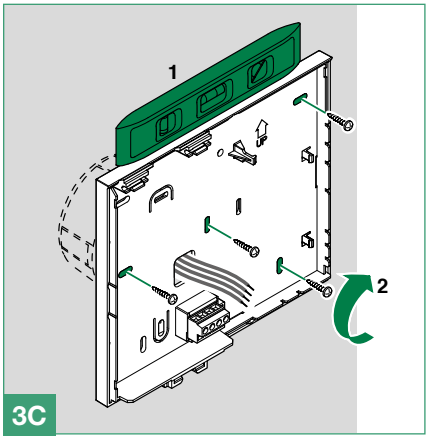

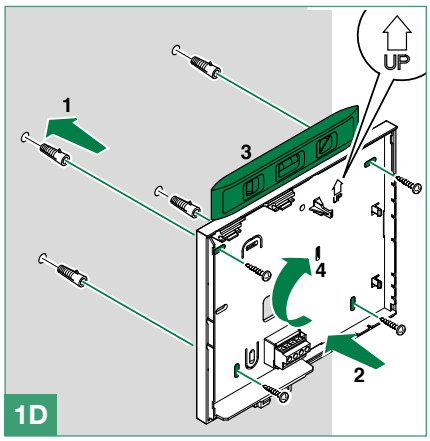

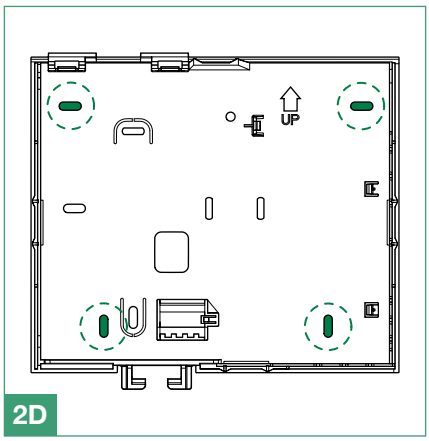

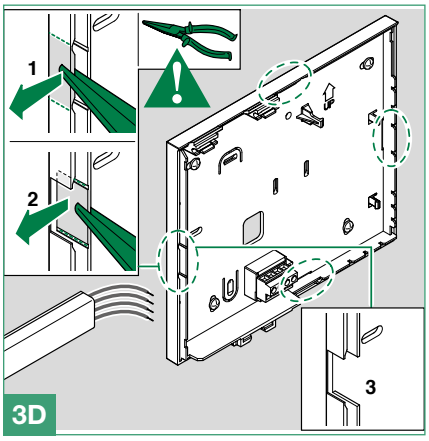

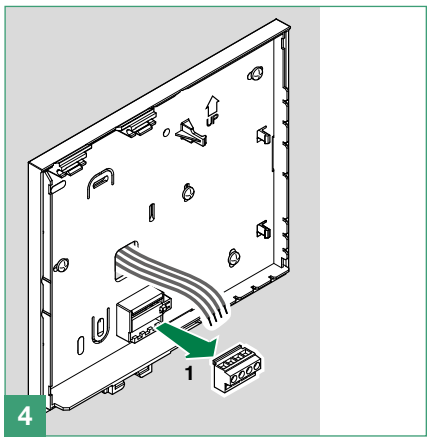
1
4

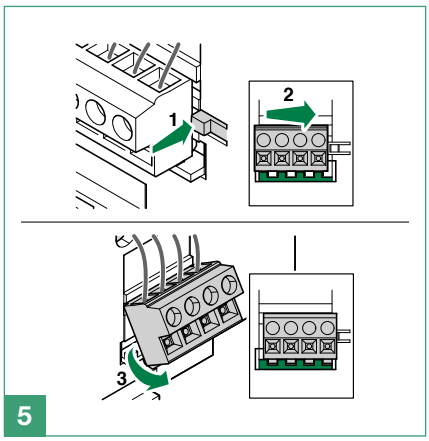
1
2
3
5

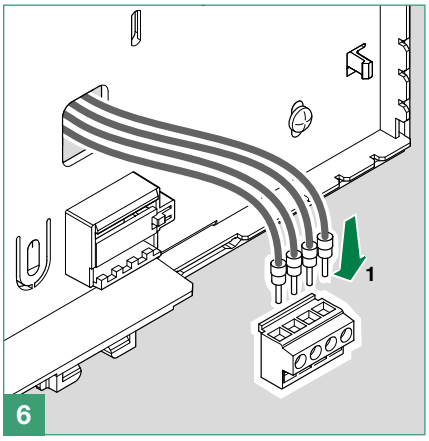
1
6

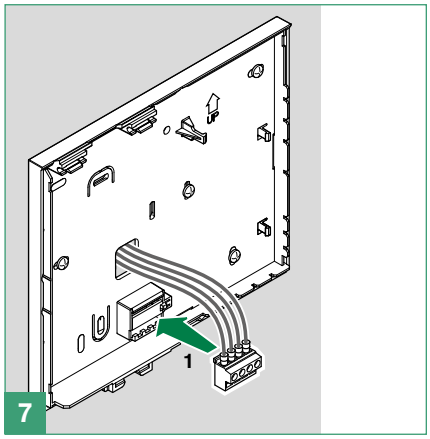
1
7

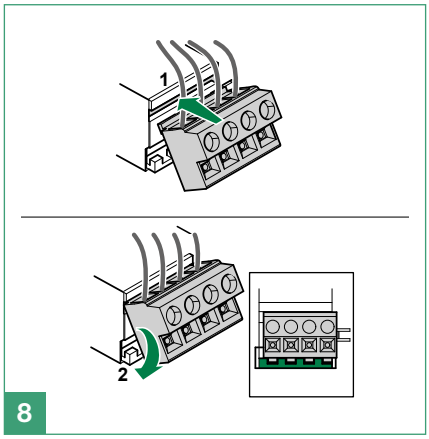
1
2
8

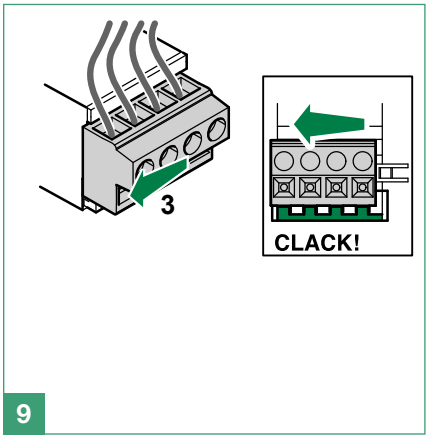
3
CLACK!
9

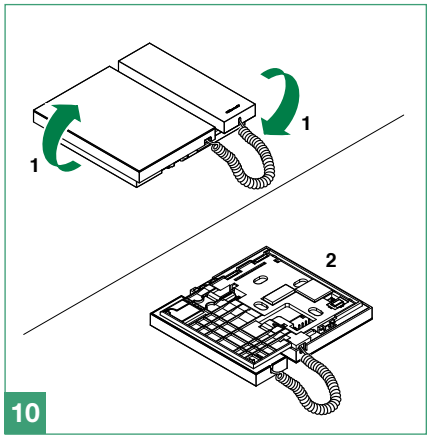
1
1
2
10

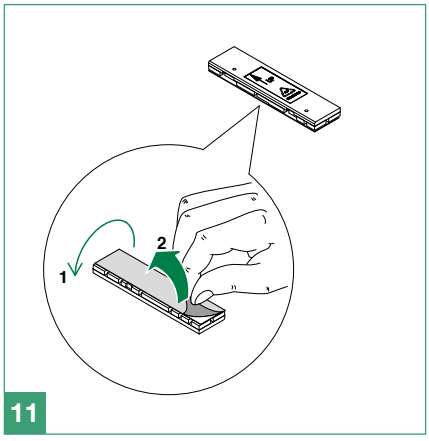
1
2
11

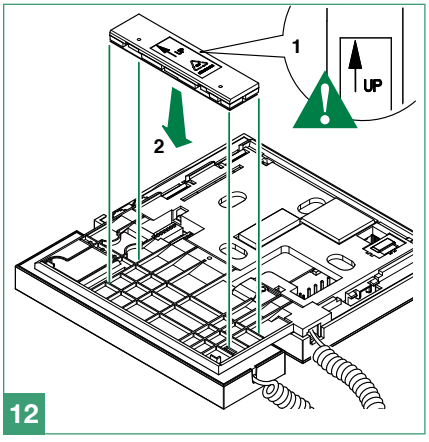
1
UP
2
12

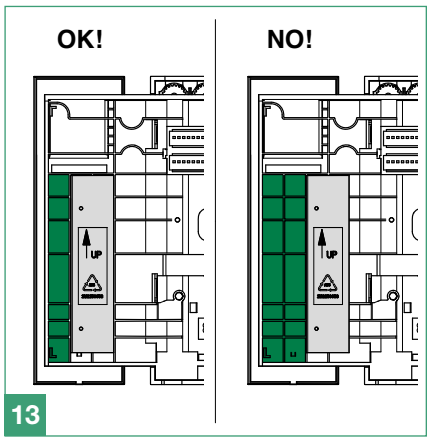
OK!
NO!
UP
UP
13

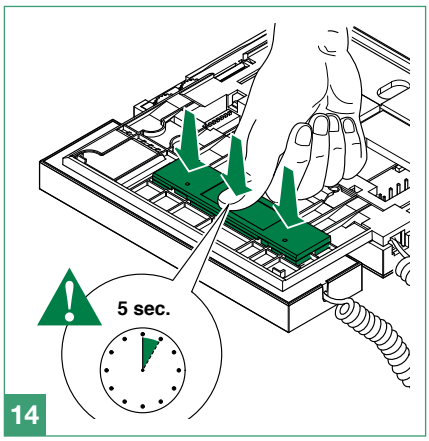
5 sec.
14

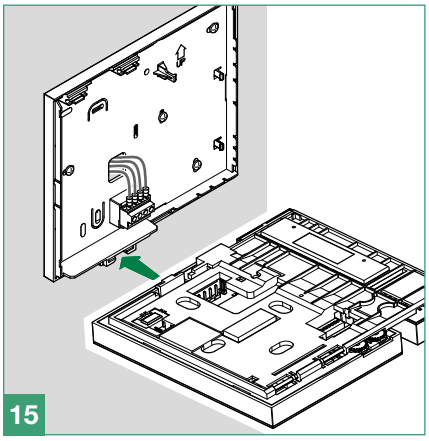
15

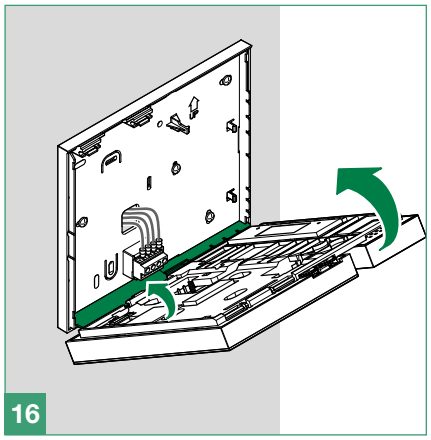

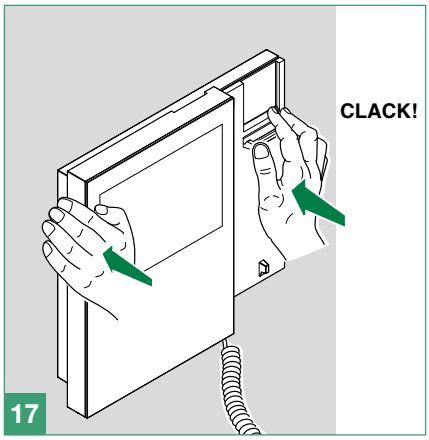

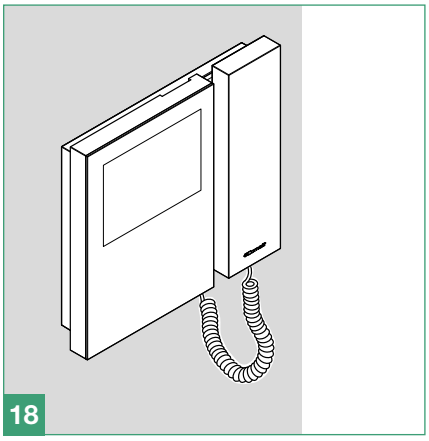

Removal

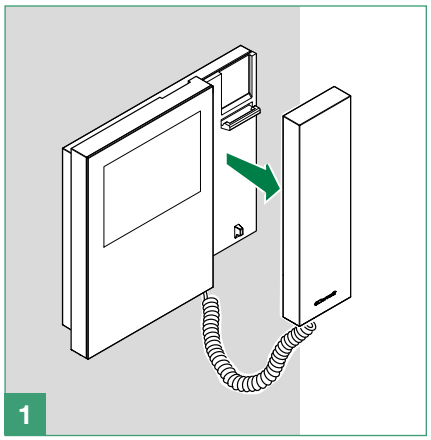

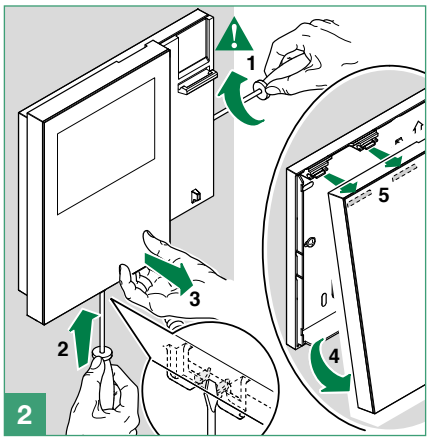

Additional buttons kit Art. 6733W

Description Art. 6733W

Accessory for converting Mini Cornetta monitors Art 6700W-/BM and 6701W-/BM into versions with 8 buttons.

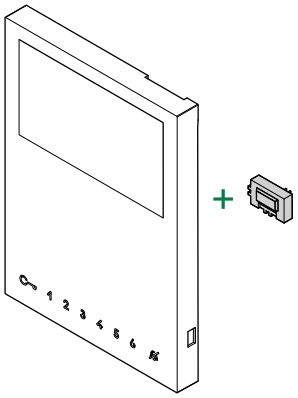

	Function		Function
	Lock-release key	5	Panic (programmable*)
1	Actuator (programmable*)	6	Guardian door-entry phone call (programmable*)
2	Self-ignition (programmable*)		Privacy key
3	Secondary switchboard call (programmable*)		Accessory for transforming MINI monitors Art 6700W-/BM and 6701W-/BM into versions with 8 buttons
4	Doctor (programmable*)		
* see the technical manual for Art. 6701/6700			

Fitting upgrade Art. 6733W

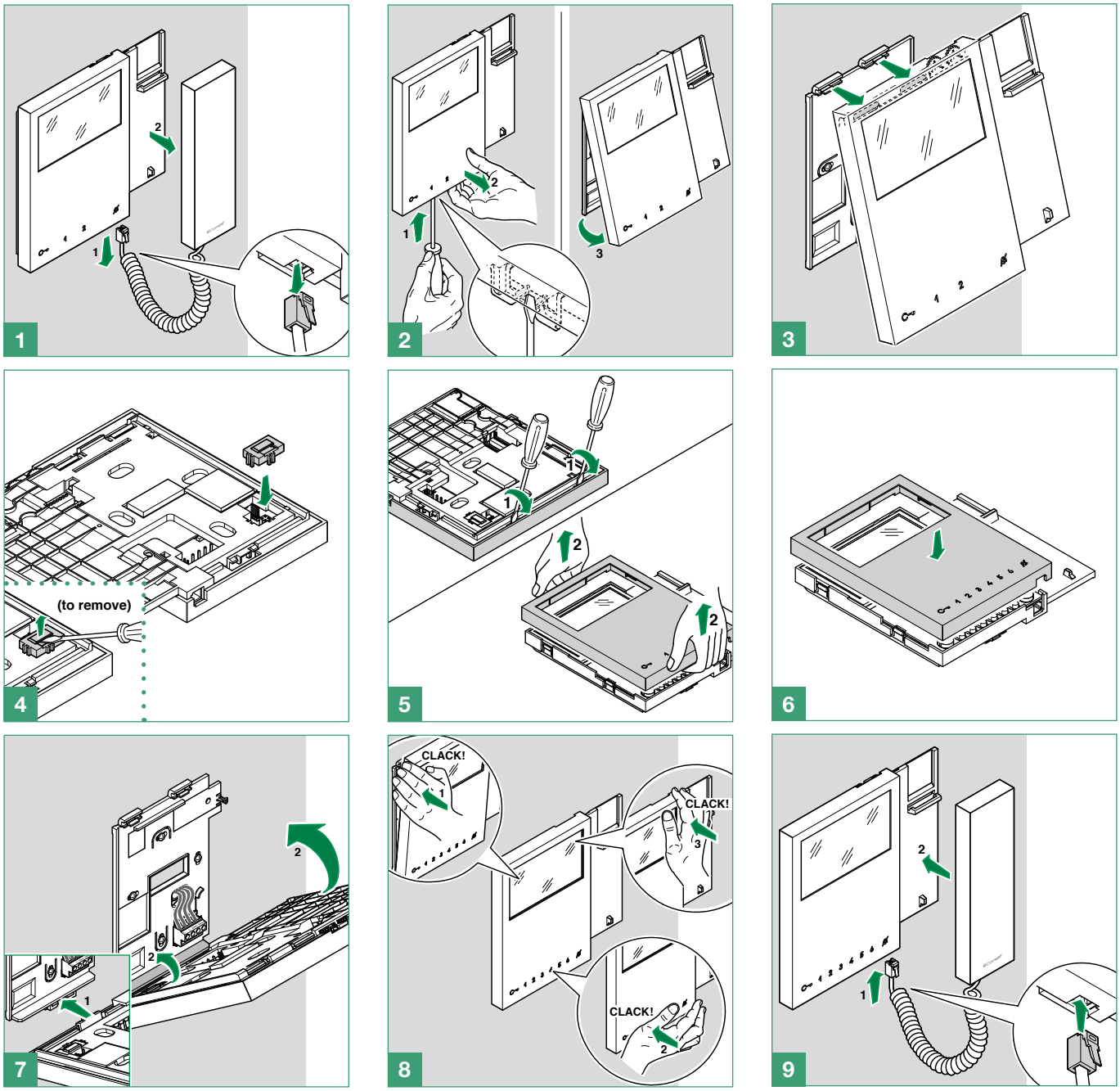

Table of contents

Warning

Monitor description 289
- **Soft-touch key activation 290**
- **Soft-touch key description 290**
- **Indicator LED description 290**

Technical specifications 291

Installation 293
- **Mounting the Icona SBC monitor on flush-mounted box Art. 6117 293**
- **Wall-mounting (Art. 6620) / on 503 series box/round box 294**

Connections 295
- **Variant: connection of call repetition device Art. 1122/A 295**

Monitor configuration 296
- **Standard configuration for soft-touch keys 296**
- **Activation/deactivation Doctor function 296**
- **Activation/deactivation Hands-Free function 296**
- **Configuration of Main and Secondary internal units - DIP 8 of S2 ..297**
- **Power supply configuration and management - DIP 7 of S2 ..... 297**
- **Advanced monitor configuration 298**
  - Warning 298
  - Programming for intercom call 298
    - Programming/deleting intercom address (selective intercom only) 298
    - Programming buttons for intercom call 299
    - Direct programming of intercom call 300
  - Programming keys for generic or coded actuator 301
  - Programming buttons for other functions 302
  - Programming range 303
  - LED/alarm/lock-release/actuator programming 304
  - Changing monitor ringtones 305
  - Programming reset 305

System performance and layouts 305

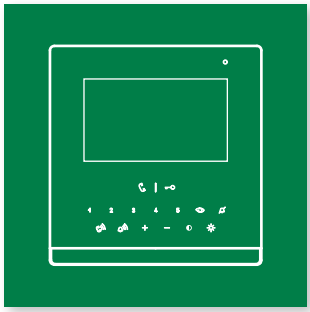

Icona door entry monitor Art. 6601W - Art. 6601W/BM

Monitor description

The Icona series is comprised of hands-free monitors that can be used in "Building Kit" (exclusively 2-wire), Simplebus Top and Kit Video systems

- *Article 6601W is a colour monitor equipped as standard with 9 function buttons and 6 adjustment buttons.*
- *Article 6601W/BM is a colour monitor equipped as standard with 9 buttons, 6 adjustment buttons and an induction loop.*

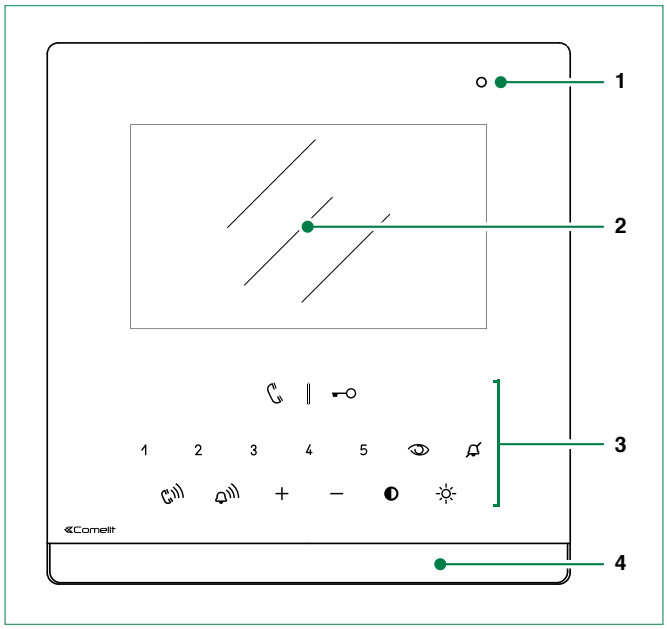

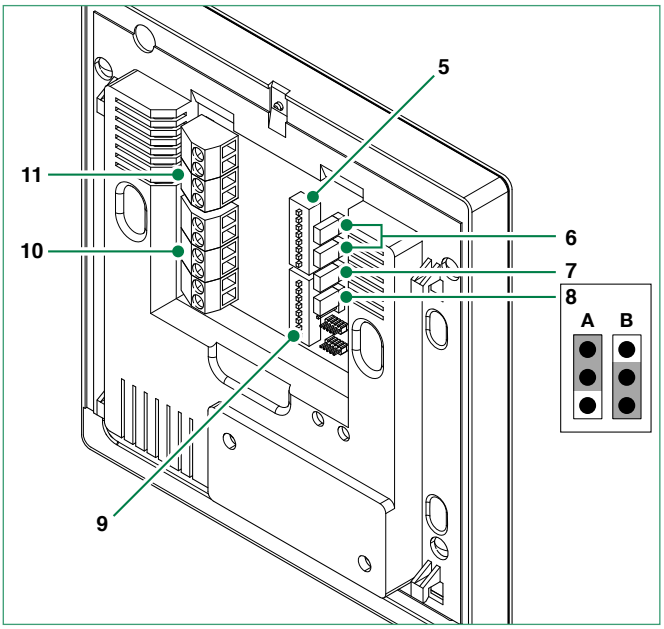

1. Microphone
2. 4.3'' LCD screen
3. Soft-touch keys/LED
4. Loudspeaker
5. **S1** User code programming microswitches (see **"addressing table"**)
6. **CV1 CV2** remove in case of separate power supply.
7. **CV5** Jumper for video closure. In systems with more than one monitor connected in cascade, only the monitor furthest away must have CV5 closed.
8. **CV6**

   position A = contact IN1-IN2 > LED (default)

   position B = contact CFP2-IN1 > ALARM/LOCK-RELEASE/ACTUATOR
9. **S2** Microswitches for programming buttons and functions (marked with a red corner)

   DIP 1-2-3-4 for button function programming

   DIP 5-6 access to programming

   DIP 7 for management of power supply voltage, see **"Power supply configuration and management"**

   DIP 8 for main and secondary monitor setting, see **"Configuration of Main and Secondary internal unit"**
10. **M2** Terminal block for system connection:
    CFP1 CFP2 Floor door call input
    S+ S- Call repetition device terminals
    IN1 IN2 LED input (programmable)
11. **M1** Terminal block for system connection:
    L L Bus line connection terminals
    - + Power supply terminals

Soft-touch key activation

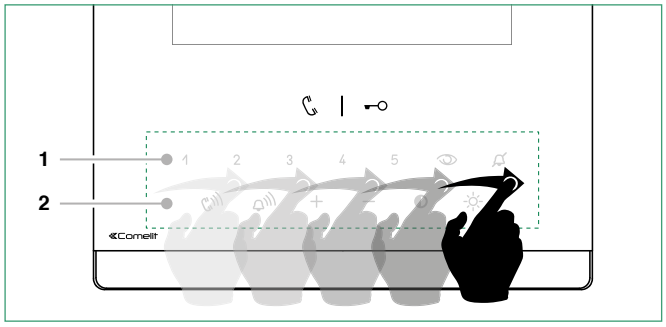

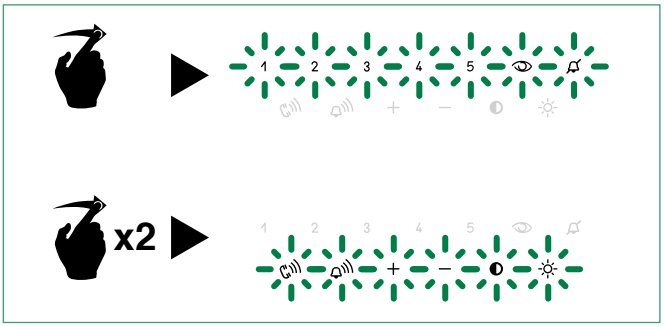

- ▶ Swipe to enable function key row (1).
- ▶ Swipe to enable function key row (2).
- ▶ Press the desired key once to activate the function associated with it

Soft-touch key description

Wait for approximately 1 sec. before pressing the same key again. Pressing the same key several times in quick succession will cancel the command

Audio key
Lock-release key
1 2 3 4 5 Keys 1-2-3-4-5 (programmable)
Self-ignition key (programmable)
Privacy key
Call volume key
Ringtone volume key
+ — Value 'Up/Down' key
Contrast key
Brightness key

Indicator LED description

Audio LED
steady = audio enabled/hands-free function
continuous flashing = call received

Lock-release LED
1 flash = confirm lock-release
4 flashes = programming successful
10 flashes = programming error
continuous flashing = door open

Privacy LED - Doctor
4 flashes = device engaged
slow flashing = programming
3 flashes (every 5 s.) = Doctor function enabled
steady = privacy function enabled

The monitor Art. 6601W is designed for use in colour systems, in the SB2 section downstream of Art. 4888C, or in systems without mixer, such as the system with 2-wire KIT or Art. 1210.

Technical specifications

MAIN SPECIFICATIONS	6601W	6601W/BM
Flush-mounted	Yes	Yes
Wall-mounted	Yes	Yes
Desk base-mounted	Yes	Yes
Hands-free function	Yes	Yes
Induction loop	/	Yes
Type of display	LCD	LCD
Display size (inches)	4,3'' 16:9	4,3'' 16:9
Display resolution (H x V)	480 x 272	480 x 272
B/W or colour display	Colors	Colors
Product colour	White RAL9003	White RAL9003
Sensitive Touch technology	Yes	Yes
Total buttons	15	15
COMPATIBILITY		
Simplebus Top audio/video system	Yes	Yes
Building Kit audio/video system	Yes	Yes
Kit audio/video system	Yes	Yes
FUNCTIONS		
Actuator control function	Yes	Yes
Self-ignition	Yes	Yes
Switchboard call function	Yes	Yes
Priority calls	Yes	Yes
Intercom function	Yes	Yes
Selective intercom call	Yes	Yes
Call to multiple addresses	Yes	Yes
Call to group addresses	Yes	Yes
Call forwarding	Yes	Yes
Privacy function	Yes	Yes
Doctor	Yes	Yes
Redial	Yes	Yes
Floor door call function	Yes	Yes
Electronic bell	Yes	Yes
Customisable ringtone	Yes	Yes
Privacy conversation function	Yes	Yes
Key button function	Yes	Yes
HARDWARE SPECIFICATIONS		
Removable terminals	Yes	Yes
SETTINGS		
Loudspeaker volume control	Yes	Yes
Microphone volume control	Yes	Yes
Ringtone volume control	Yes	Yes
Display brightness control	Yes	Yes
Display contrast control	Yes	Yes

GENERAL INFO	6601W	6601W/BM
Product height (mm)	147	147
Product width (mm)	142,5	142,5
Product depth (mm)	23	23

TECHNICAL SPECIFICATIONS		
Power supply voltage	22÷28Vdc	22÷28Vdc
Operating temperature (°C)	-5÷40	-5÷40
Relative humidity for operation	25 - 75 %	25 - 75 %
Clamps	L L - + CFP1 CFP2 S+ S- IN1 IN2	L L - + CFP1 CFP2 S+ S- IN1 IN2

Installation

Mounting the Icona SBC monitor on flush-mounted box Art. 6117

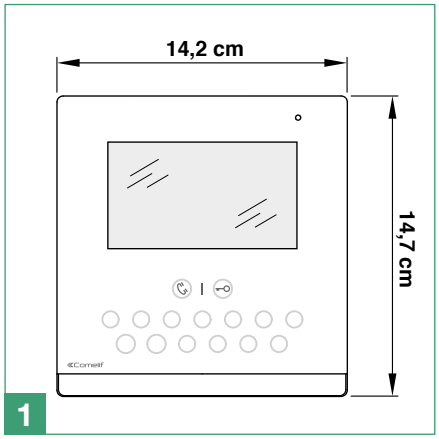

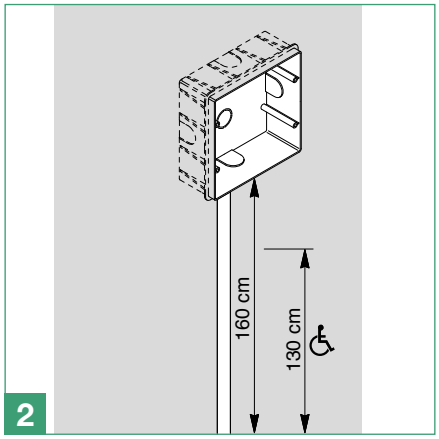

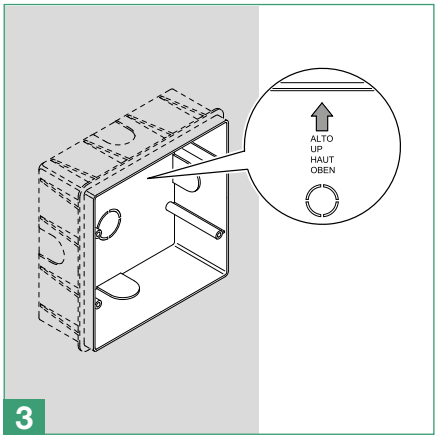

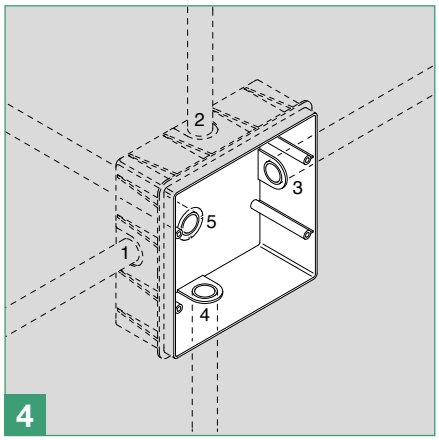

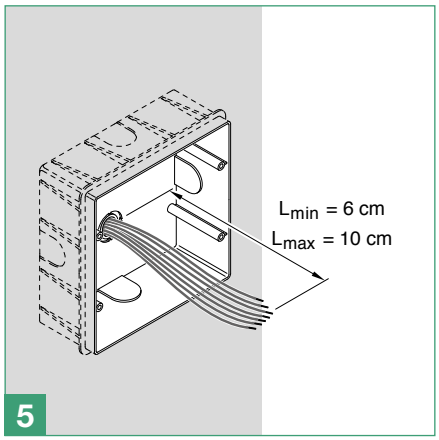

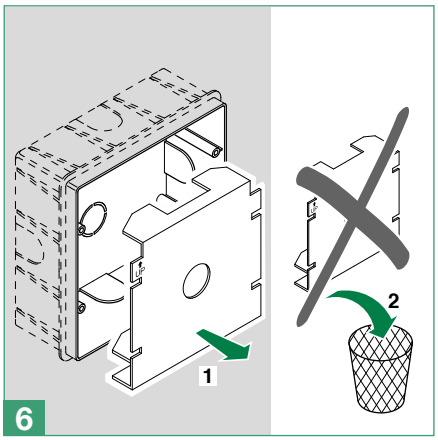

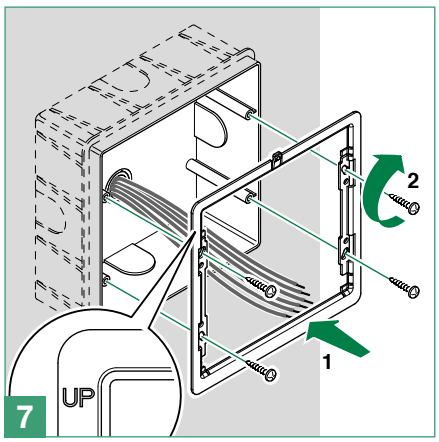

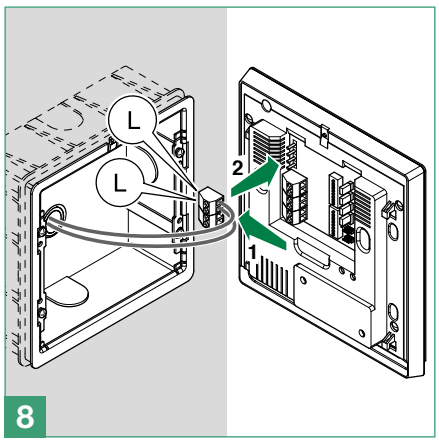

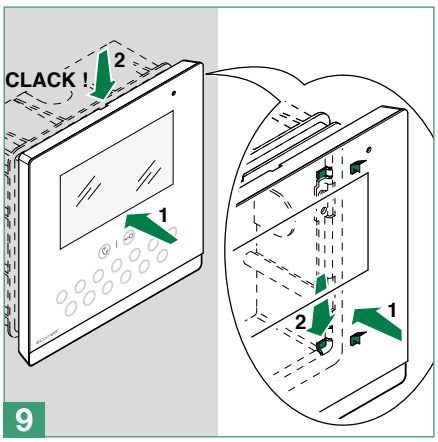

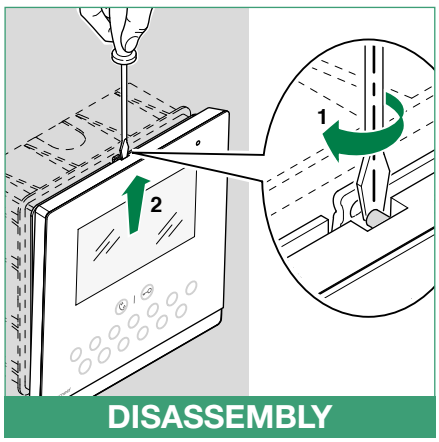

Wall-mounting (Art. 6620) / on 503 series box/round box

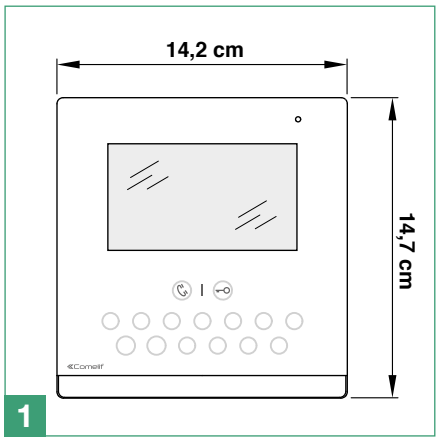

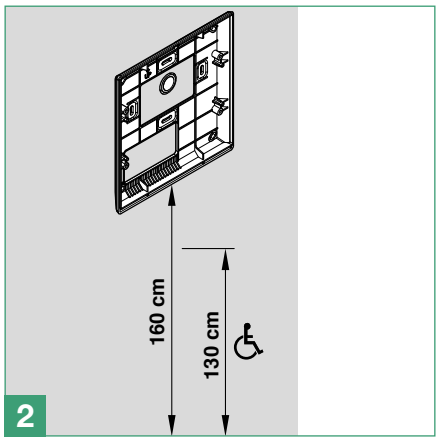

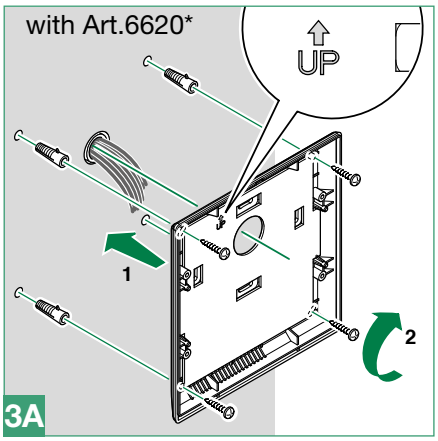

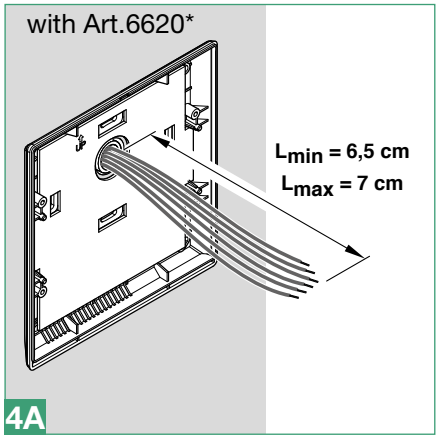

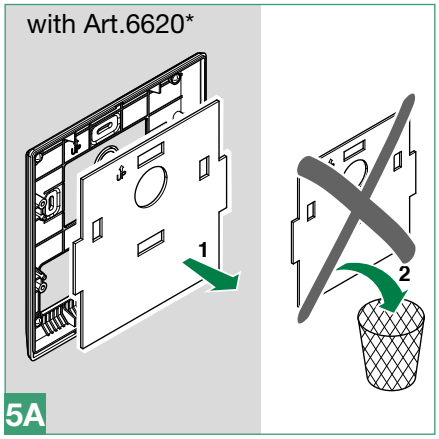

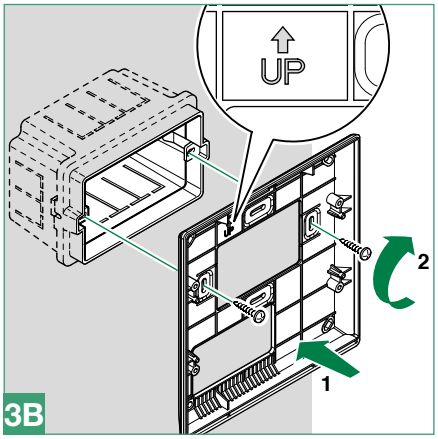

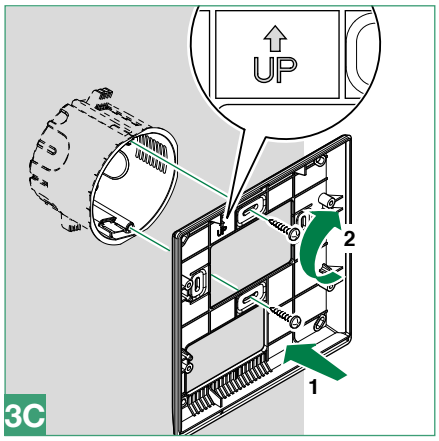

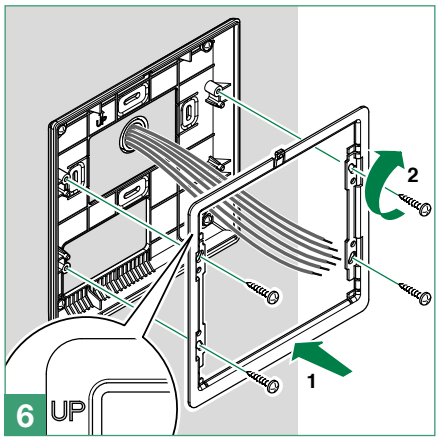

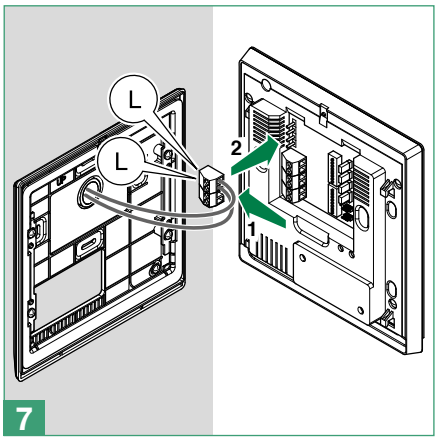

* Art. 6620 (optional)

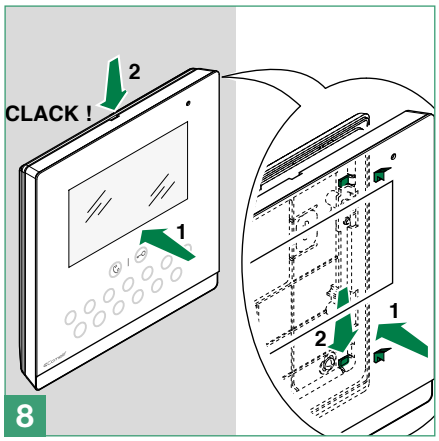

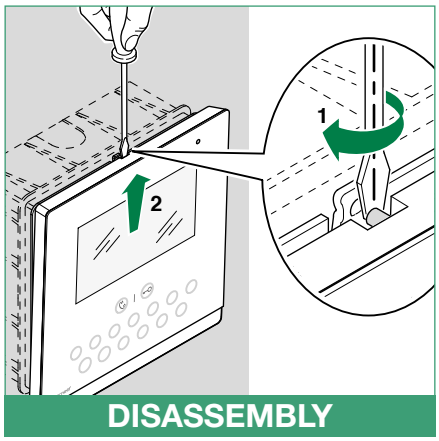

Connections

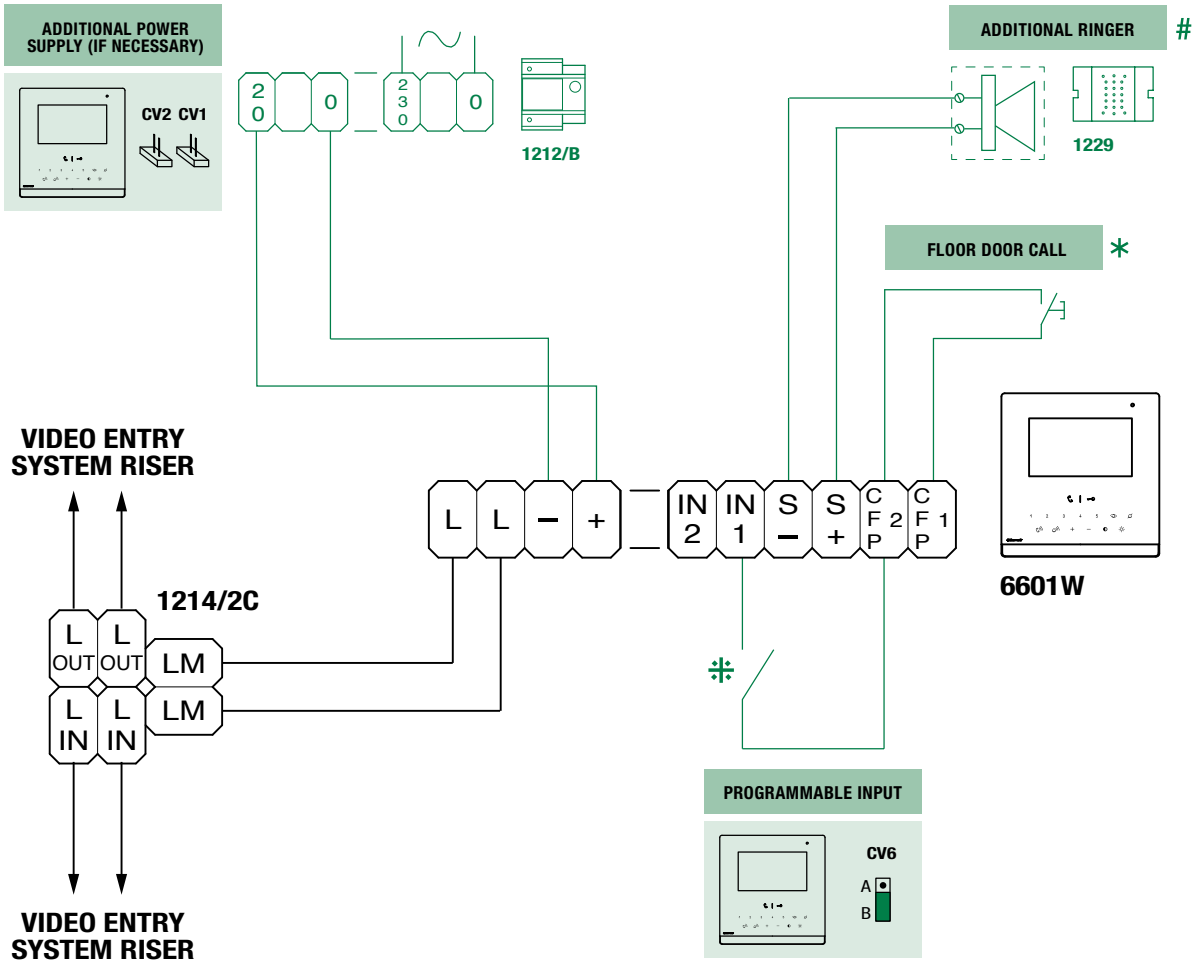

20 m MAX - Connect only one call repetition device for each user code.

* **20 m MAX** - Use shielded cable for the connection and do not route the cables in the vicinity of heavy inductive loads or power supply cables (230V/400V).
Where multiple door-entry phones or monitor backplates have the same user code, connect the CFP button on one only; all the devices will ring simultaneously.

⁜ For the programming procedure, see paragraph: **LED/alarm/lock-release/actuator programming**

Variant: connection of call repetition device Art. 1122/A

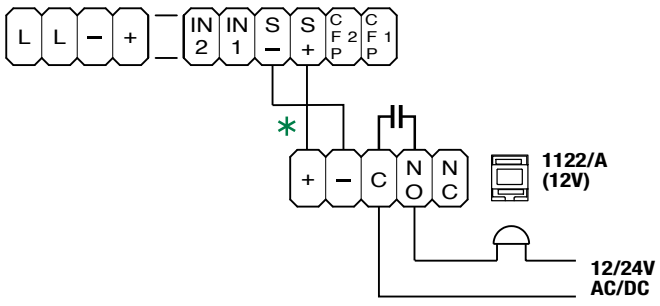

* **20 m MAX -** Connect only one call repetition device for each user code. If inductive loads are connected, the connection of 470nF capacitance in parallel with the C-NO contacts of Art. 1122/A is advisable.

Monitor configuration

	Legend
0	DIP-switch OFF
1	DIP-switch ON
🔑	**Lock- release**
📞	**Audio**
ACT	**Actuator**
AI	**Self-ignition ****
CCP	**Main switchboard call** [not for use in systems with KIT]
CCS	**Secondary switchboard call** [not for use in systems with KIT]
K	**Guardian doorentry phone call**
D	**Doctor**
PAN	**Panic** [not for use in systems with KIT]
INT	**General or selective programmable intercom** [general internal call as standard for KIT and Simplebus Top]
INTb	**Two-family intercom** [for KIT only]
NULL	**No function**
PROG	**Programmed functions, see "Advanced monitor configuration". In this DIP switch setting, the buttons control the programmed functions; the NON-programmed buttons control functions referred to on line 0000 (default).**

** **Press and hold to enable/disable the function**

Standard configuration for soft-touch keys

DIP S2											
DIP 1	**DIP 2**	**DIP 3**	**DIP 4**	👁	🔑	📞	**P1**	**P2**	**P3**	**P4**	**P5**
0	0	0	0	**AI**			**CCS**	**ACT**	**D**	**PAN**	**K**
1	0	0	0	**AI**			**ACT**	**INT**	**INTb**	**D**	**CCS**
0	1	0	0	**AI**	🔑		**INT**	**INTb**	**ACT**	**CCS**	**CCP**
1	1	0	0	**CCS**			**ACT**	**CCP**	**PAN**	**K**	**D**
0	0	1	0	**ACT**	**ACT**		**ACT**	**ACT**	**ACT**	**ACT**	**ACT**
1	0	1	0	**ACT**			**INT**	**CCS**	**CCP**	**INTb**	**PAN**
0	1	1	0	**D**			**AI**	**K**	**CCS**	**CCP**	**INTb**
1	1	1	0	**INT**		📞	**INTb**	**AI**	**INT**	**PAN**	**D**
0	0	0	1	**PAN**			**CCS**	**D**	**AI**	**INT**	**INTb**
1	0	0	1	**CCS**	🔑		**K**	**PAN**	**CCP**	**AI**	**INT**
0	1	0	1	**K**			**CCP**	**PAN**	**ACT**	**INT**	**AI**
1	1	0	1	**CCP**			**PAN**	**CCS**	**K**	**ACT**	**D**
0	0	1	1	**INTb**			**D**	**INT**	**ACT**	**AI**	**CCS**
1	0	1	1	**INT**			**INT**	**INT**	**INT**	**INT**	**INT**
0	1	1	1	**NULL**	**NULL**	**NULL**	**NULL**	**NULL**	**NULL**	**NULL**	**NULL**
1	1	1	1	PROG							

Standard configuration for DIP switches 1-2-3-4 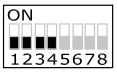

Activation/deactivation Doctor function

- ▶ Press and hold (4 s.) the programmed key *(Default key 3)*
  - » (ACTIVATION) ♪ + 3 flashes every 5 s.
  - » (DEACTIVATION) **BEEP**

Activation/deactivation Hands-Free function

- ▶ Press and hold (4 s.) on the audio activation key 📞
  - » (ACTIVATION) ♪ + audio LED with FIXED ILLUMINATION
  - » (DEACTIVATION) **BEEP** + 📞 LED OFF

Configuration of Main and Secondary internal units - DIP 8 of S2

- To configure an internal unit as the main unit, set **DIP8** of **S2** to **OFF**.
- To configure an internal unit as a secondary unit, set **DIP8** of **S2** to **ON**.

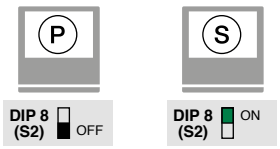

In systems with Art. 1209 or Art. 1210, you can configure a maximum of 1 main monitor (+ 3 separately powered) while in systems with Art. 4888C you can configure a maximum of 2 main monitors (+ 1 powered separately).

Power supply configuration and management - DIP 7 of S2

- For correct power management, the **DIP** switch should be set in accordance with the type of system and its configuration:
- **in systems with power supply units 1209 and1210:** always set the DIP switch to **ON**
- **in systems with power supply unit 4888C:** for secondary internal units, always set the DIP switch to **OFF**, for main internal units, follow the indications given in the examples in the figure below:

  A. 1 main internal unit,

  B. 2 main internal units,

  C. 3 main internal units of which 1 is powered separately.

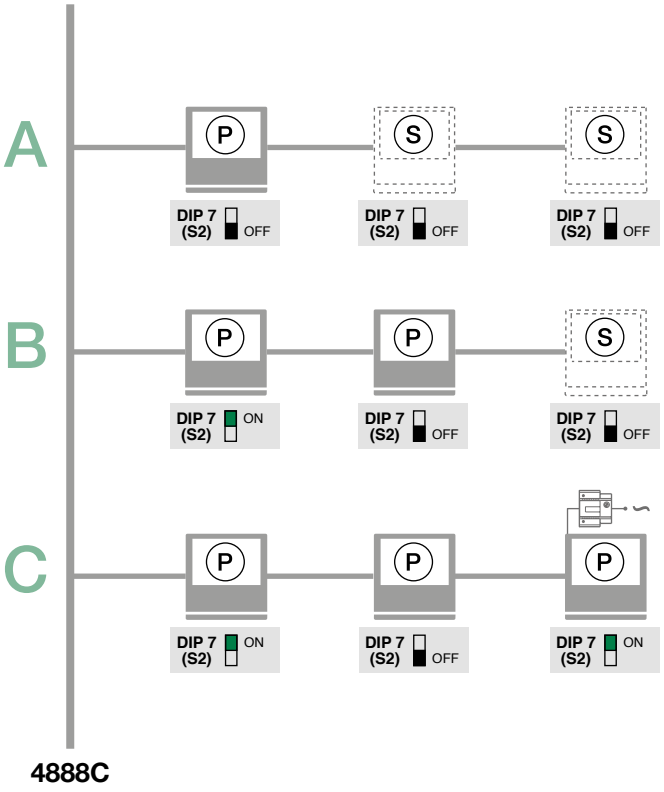

Advanced monitor configuration

Warning

If the default settings (see table **"Standard configuration for soft-touch keys"** do not reflect requirements, the keys can be programmed differently by carrying out the steps below.
At the end, set S2 DIP switches 1-2-3-4 to the combination 1111 (PROG setting in the configuration tables "Advanced monitor configuration". In this DIP switch setting, the keys control the programmed functions; the NON-programmed keys control functions referred to on line 0000 (see table "Standard configuration for soft-touch keys". Restore the user code setting on S1, see "addressing table".

Programming for intercom call

General intercom: function allowing calls to one or more internal units identified by the same call address as used by the external unit.
Selective intercom: function allowing calls to one or more internal units identified by a dedicated call address (see table B) which is different from the one used by the external unit.
General and selective intercoms CANNOT be used together on the same riser.

Programming/deleting intercom address (selective intercom only)

Take note of the S2, S1 setting and restore it when programming is complete

1)	2)	3)	
Programming; set code, TABLE B S1 ON 1 2 3 4 5 6 7 8	S2 DIP: 1 2 3 4 5 6 / 0 0 0 1 1 1 S2 ON 1 2 3 4 5 6 7 8	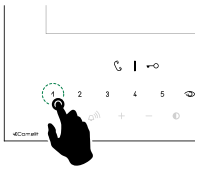	
Cancellation **DIP ON** S1 ON 1 2 3 4 5 6 7 8	S2 DIP: 1 2 3 4 5 6 / 1 1 1 1 1 1 S2 ON 1 2 3 4 5 6 7 8	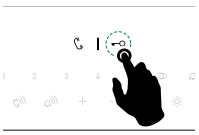	

Selective intercom addresses

You must set the intercom address on all the riser's internal units.
You can assign the same intercom address to a maximum of 3 internal units.
For group calls, select the desired intercom codes simultaneously (max. 3).

TAB. B

Code	DIP switch ON	S1	Code	DIP switch ON	S1
1	1		5	5	
2	2		6	6	
3	3		7	7	
4	4		8	8	

Programming buttons for intercom call

DIP S2												DIP S1
DIP 1	DIP 2	DIP 3	DIP 4	👁	🔑	📞	P1	P2	P3	P4	P5	
0	0	0	0									
1	0	0	0					**INT**	**INTb**			
0	1	0	0		🔑		**INT**	**INTb**				
1	1	0	0									
0	0	1	0									
1	0	1	0				**INT**			**INTb**		
0	1	1	0								**INTb**	ADDRESS
1	1	1	0	**INT**		📞	**INTb**		**INT**			
0	0	0	1							**INT**	**INTb**	
1	0	0	1		🔑						**INT**	
0	1	0	1							**INT**		
1	1	0	1									
0	0	1	1	**INTb**				**INT**				
1	0	1	1	**INT**			**INT**	**INT**	**INT**	**INT**	**INT**	
0	1	1	1									
1	1	1	1		PROG							

Example 1 - all systems (INCLUDING KITS!) - General intercom
on a monitor with user code 5, P2 programming = general internal call, P3 = general intercom with address 9

Example 2 - Selective intercom
on a monitor with user code 1 and intercom address 1, P2 programming = selective intercom with address 2, P3 = selective intercom with address 3

1. Set S2 DIP switches 6 to the combination 1.
   - » the privacy LED 🔔 flashes.

S2 DIP						
1	2	3	4	5	6	S2
0	0	0	0	0	1	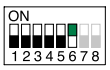 ⇒ 🔔

2. Refer to the table **"Programming buttons for intercom call"** and select a combination in which the intercom function (either INT or INTb) is listed for the buttons you wish to program.
   EXAMPLE 1: for P2= general internal call, set S2 DIP switches 1-2-3-4 to the combination 1000 or 0011 or 1011 (P2=INT) or 0100 (P2=INTb) and set S1 with address 5 as per **"addressing table"**, then go to point 3
   EXAMPLE 1: for P3= general intercom, set S2 DIP switches 1-2-3-4 to the combination 1110 or 1011 (P3=INT) or 1000 (P3=INTb) and set S1 with address 9 as per **"addressing table"**, then go to point 3
   EXAMPLE 2: for P2= selective intercom, set S2 DIP switches 1-2-3-4 to the combination 1000 or 0011 or 1011 (P2=INT) and set S1 with address 2 as per **table B**, then go to point 3
   EXAMPLE 2: for P3= selective intercom, set S2 DIP switches 1-2-3-4 to the combination 1110 or 1011 (P3=INT) and set S1 with address 3 as per **table B**, then go to point 3.
3. Press and release the key to be associated with the function
   - » the lock-release LED 🔑 flashes 4 times.
   - » a confirmation tone will sound.
4. To exit programming mode, set S2 DIP switches 5-6 to the combination 00
   - » the privacy LED 🔔 switches off
5. **When programming is complete, set S2 DIP switches 1-2-3-4 to the combination 1111. Restore the user code setting on S1, see table "addressing table".**

Direct programming of intercom call

Allows direct programming of intercom call via the internal units.

✓ Requires 2 operators

Step 1: enter programming mode

Operator 1 and Operator 2 carry out the following procedures on 2 internal units:

1. Set S2 DIP switches 1-2 -3-4 to the combination 1111
2. Press and hold buttons 1 and 3 for 2 sec.
   - » The internal unit emits 1 tone.
   - » The privacy LED flashes.
   - » The audio button LED lights up.
   - » The internal unit enters audio mode.
   - » At this point the 2 operators will be communicating with each other.

Step 2: intercom call programming

Operator 1:

▶ Press the key you want to program to call operator 2 (e.g. 2).

» The internal unit manned by operator 1 emits a confirmation tone.

Operator 2:

▶ Press the key you want to program to call operator 1 (e.g. 1).

» The internal unit manned by operator 2 emits a confirmation tone.

Operator 1/ Operator 2:

▶ Press the audio key .

» The audio button LED goes OFF.

» Programming of the 2 internal units is now complete.

To program another internal unit, move on to STEP 3.

Step 3: programming other internal units

Operator 1/ Operator 2:

1. Once the new station has been reached, carry out step 1 to begin communication
2. Repeat step 2

NOTE If a call is received during programming, it must be answered and the programming procedure resumed afterwards.

Programming keys for generic or coded actuator

DIP S2												DIP S1
DIP 1	DIP 2	DIP 3	DIP 4	👁	🔑	📞	P1	P2	P3	P4	P5	
0	0	0	0					ACT				
1	0	0	0				ACT					
0	1	0	0		🔑				ACT			
1	1	0	0				ACT					
0	0	1	0	ACT	ACT		ACT	ACT	ACT	ACT	ACT	
1	0	1	0	ACT								
0	1	1	0									ADDRESS
1	1	1	0			📞						ON 12345678
0	0	0	1									
1	0	0	1		🔑							
0	1	0	1						ACT			
1	1	0	1							ACT		
0	0	1	1						ACT			
1	0	1	1									
0	1	1	1									
1	1	1	1		PROG							

Example:
on a monitor with user code 5, P1 programming = generic actuator, 👁 = coded actuator (code 125)

Take note of the DIP-switch settings

1. Set S2 DIP switches 6 to the combination 1.

» the privacy LED 🔕 flashes.

S2 DIP						S2	ON 12345678	⇒	🔕
1	2	3	4	5	6				
0	0	0	0	0	1				

2. Refer to the table **"Programming keys for generic or coded actuator"**select a combination in which the actuator function (ACT) is listed for the buttons you wish to program.
E.g.: for P1= generic actuator, set S2 DIP switches 1-2-3-4 to the combination 1000 or 1100 or 0010 (P1=ACT), set S1 DIP switches to the combination 11111111, then go to point 3.
E.g.: for 👁 = coded actuator (code 125), set S2 DIP switches 1-2-3-4 to the combination 0010 or 1010 (👁 =ACT), set S1 with address 125 as per **"addressing table"**, then go to point 3.

3. Press and release the key to be associated with the function.

» the lock-release LED 🔑 flashes 4 times.

» a confirmation tone will sound.

4. To exit programming mode, set S2 DIP switches 5-6 to the combination 00.

» the privacy LED 🔕 switches off.

5. When programming is complete, set S2 DIP switches 1-2-3-4 to the combination 1111. Restore the user code setting on S1, see "addressing table".

Programming buttons for other functions

DIP S2												DIP S1
DIP 1	DIP 2	DIP 3	DIP 4	👁	🔑	📞	P1	P2	P3	P4	P5	
0	0	0	0	AI			CCS		D	PAN	K	
1	0	0	0	AI						D	CCS	
0	1	0	0	AI						CCS	CCP	
1	1	0	0	CCS				CCP	PAN	K	D	
0	0	1	0									
1	0	1	0					CCS	CCP		PAN	
0	1	1	0	D			AI	K	CCS	CCP		ADDRESS
1	1	1	0					AI		PAN	D	ON 12345678
0	0	0	1	PAN			CCS	D	AI			
1	0	0	1	CCS			K	PAN	CCP	AI		
0	1	0	1	K			CCP	PAN			AI	
1	1	0	1	CCP			PAN	CCS	K		D	
0	0	1	1				D			AI	CCS	
1	0	1	1									
0	1	1	1	NULL	NULL		NULL	NULL	NULL	NULL	NULL	
1	1	1	1		PROG							

Example:
on a monitor with user code 5, P4 programming = self-ignition, P5 = Secondary switchboard call.

1. Set S2 DIP switches 6 to the combination 1.

» the privacy LED 🔕 flashes.

S2 DIP						S2		
1	2	3	4	5	6		ON 12345678	⇒
0	0	0	0	0	1			

2. Refer to the table **"Programming buttons for other functions"** and select a combination in which the desired/necessary functions are listed for the buttons you wish to program.
E.g.: for P4= self-ignition, P5= Secondary switchboard call, set S2 DIP switches 1-2-3-4 to the combination 0011 (P4=AI, P5=CCS).

3. Press and release the keys to which you wish to assign the functions

» the lock-release LED 🔑 flashes 4 times.

» one confirmation tone is emitted.

4. To exit programming mode, set S2 DIP switches 5-6 to the combination 00

» the privacy LED 🔕 switches off.

5. When programming is complete, set S2 DIP switches 1-2-3-4 to the combination 1111.

Programming range

Take note of the S2, S1 setting and restore it when programming is complete

▶ Carry out steps 1 to 4

	1)	2)	3)		4)
Range minimum address	S1 ON 1 2 3 4 5 6 7 8 set code, **"addressing table"**	S2 DIP 1 2 3 4 5 6 / 0 0 0 0 1 0 S2 ON 1 2 3 4 5 6 7 8 ⇓	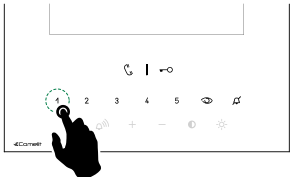	OK Prog. x4	S2 ON 1 2 3 4 5 6 7 8 ⇓
Range maximum address					
Enable range			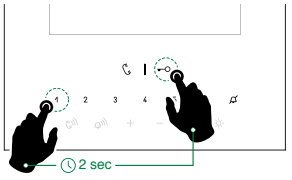	KO Prog. x10	
Disable range			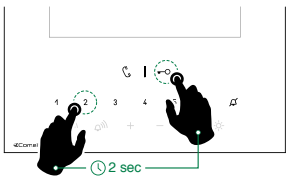		
Deleting the range	DIP ON S1 ON 1 2 3 4 5 6 7 8	S2 DIP 1 2 3 4 5 6 / 1 1 1 1 1 0 S2 ON 1 2 3 4 5 6 7 8 ⇓	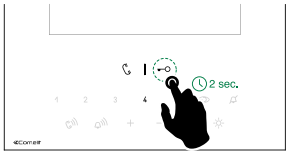		

LED/alarm/lock-release/actuator programming

Take note of the S2, S1 setting and restore on completion of programming

▶ Carry out steps 1 to 4

	1)	2)	3)		4)
Input IN 1- IN 2 ⇒ LED (default)*		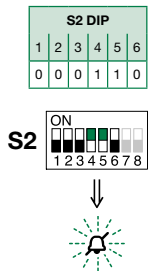	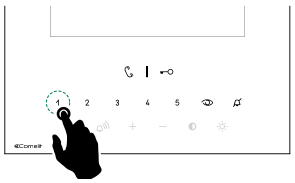		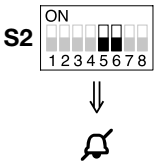
Input CFP2 - IN 1 ⇒ ALARM*			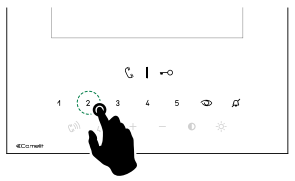		
Input CFP2 - IN 1 ⇒ LOCK-RELEASE*		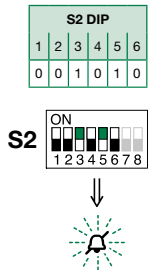			
Input CFP2 - IN 1 ⇒ CODED ACTUATOR*	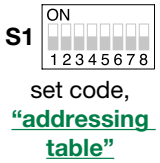 set code, "addressing table"				
Input CFP2 - IN 1 ⇒ GENERIC ACTUATOR*	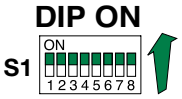		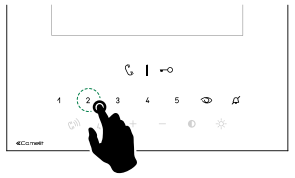		

* See "Connections".

Changing monitor ringtones

1. Keep the ⊸O button pressed until a confirmation tone is emitted (this operation is only possible with the system in stand-by; otherwise the signalling LED will flash to warn the user)
2. Press and release the ⊸O button:
   once (1 confirmation tone is emitted) to change the ringtone of calls from the external unit.
   twice (2 confirmation tones are emitted) to change the ringtone for calls from the switchboard.
   3 times (3 confirmation tones are emitted) to change the ringtone for intercom calls made from the internal unit.
   4 times (4 confirmation tones are emitted) to change the floor door (“CFP”) call ringtone.
   Any further pressing of the ⊸O repeats the sequence described above.
3. Press and release button 1 to scroll through the various available ringtones in sequence.
4. Press button 2 to confirm selection of the last ringtone heard and to exit (at any time) the monitor ringtone change mode. On exiting the monitor ringtone selection mode a confirmation tone will be emitted.

Programming reset

Factory settings:

- Button functions for the S2 DIP switch 1-2-3-4 combination;
- Intercom address absent;
- Range function and min./max. addresses absent;
- Ringtone reset.
- Input IN 1 - IN 2 > LED (default).
- Doctor, Privacy and Hands Free functions disabled.

Take note of the S2, S1 setting and restore on completion of programming

1)	2)	3)
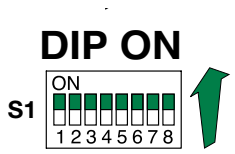	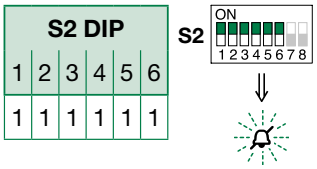	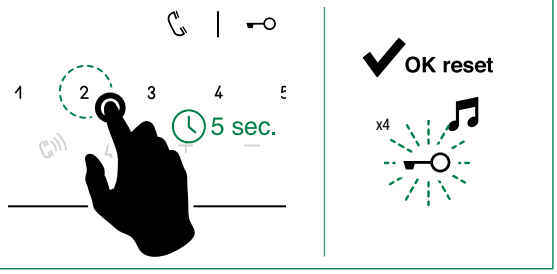

System performance and layouts

For further information of system performance and to view installation layouts, click on the system type that best meets your requirements:

- **Audio/video kit** for the creation of audio-video systems for *individual residences*.
- **Building Kit audio/video system** for the creation of audio-video systems for *small apartment blocks.*
- **SBTOP audio/video system** for the creation of audio-video systems for *residential complexes.*

Table of contents

Warning

Flush-mount box Art. 6117 307

Fixing kit for plasterboard Art. 6118 308

Desk-top base Art. 6612A 309

Wall-mount base Art. 6620 310

Flush-mount box Art. 6117

Article 6117 is the desktop base for the Icona monitor.

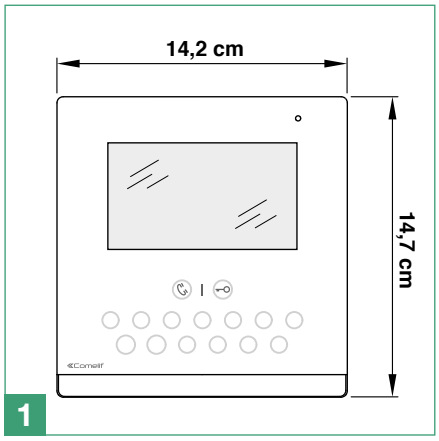

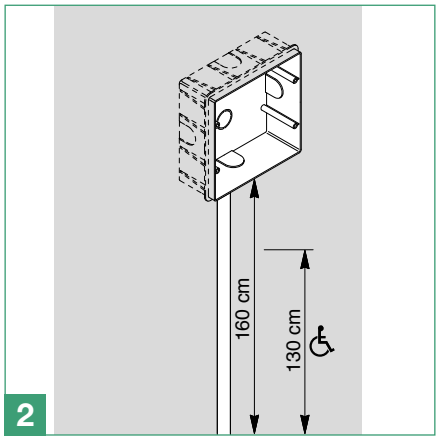

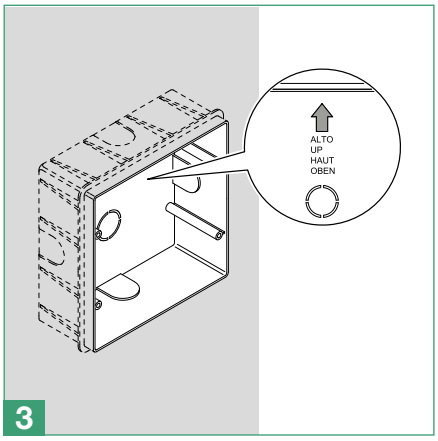

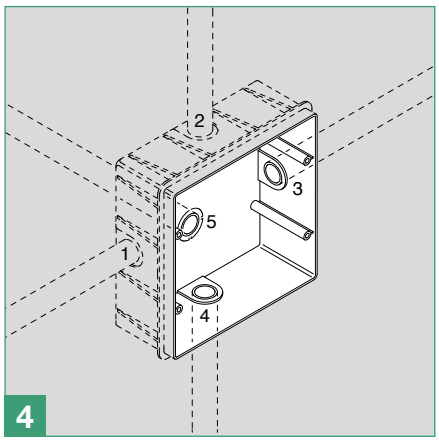

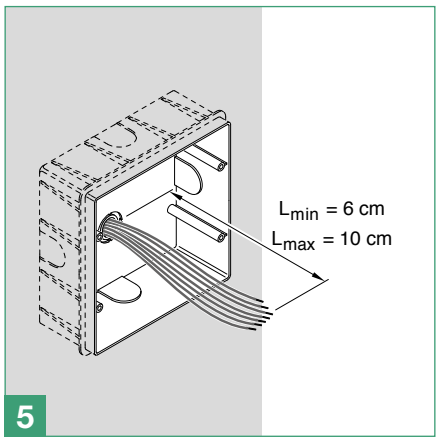

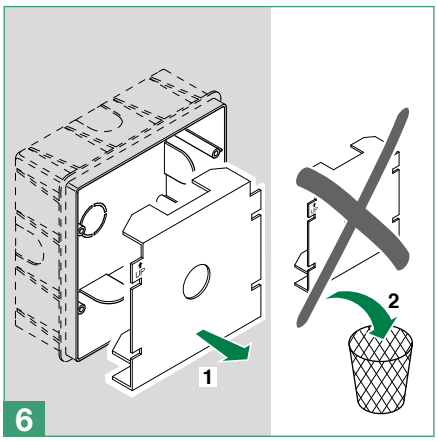

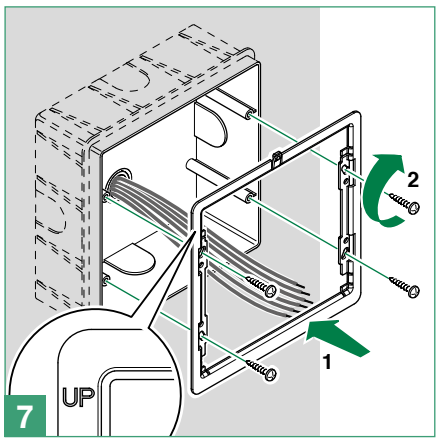

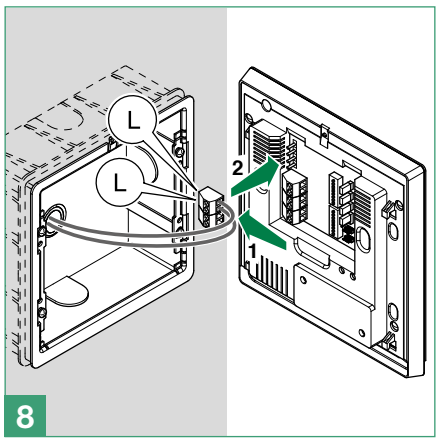

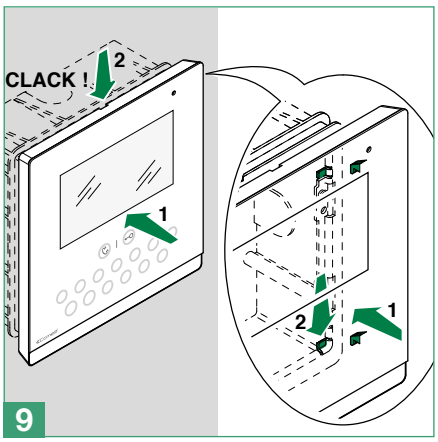

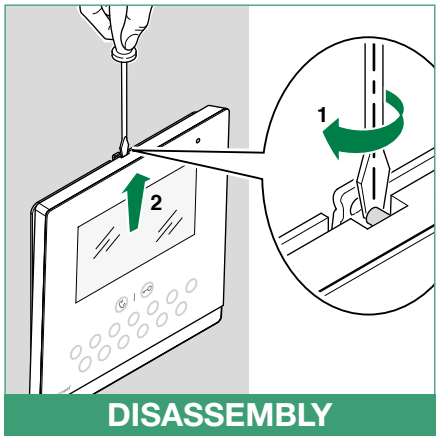

Fixing kit for plasterboard Art. 6118

Article 6118 is a kit for fixing the monitor to plasterboard walls.

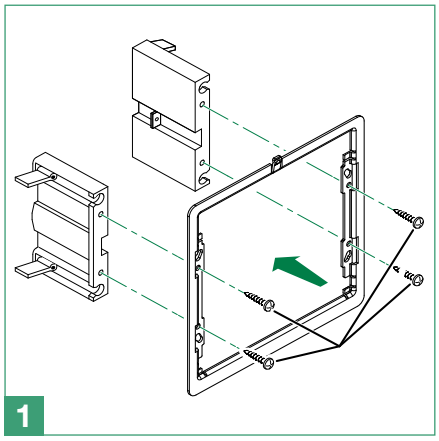

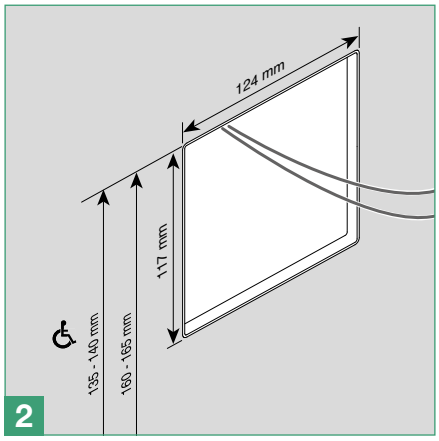

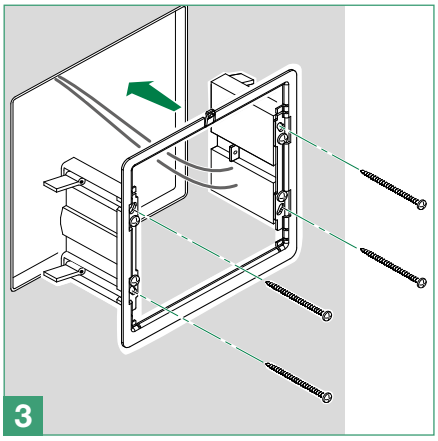

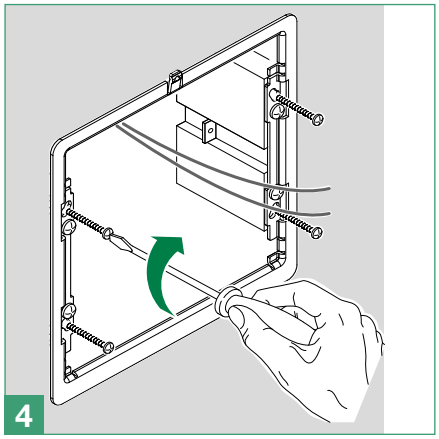

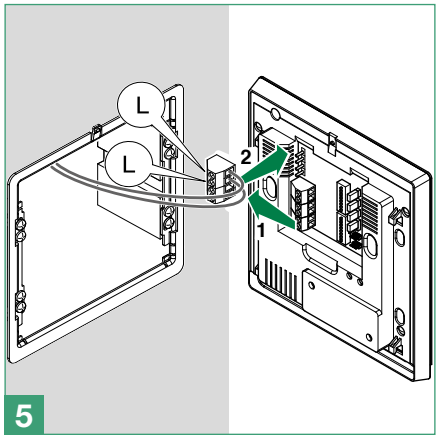

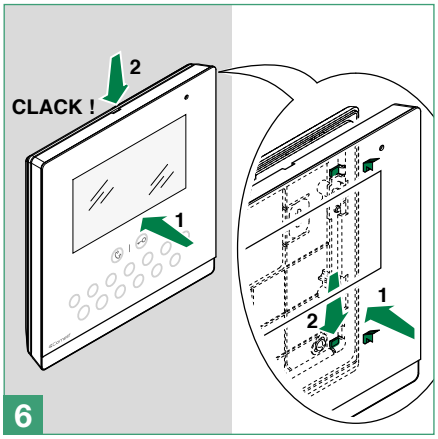

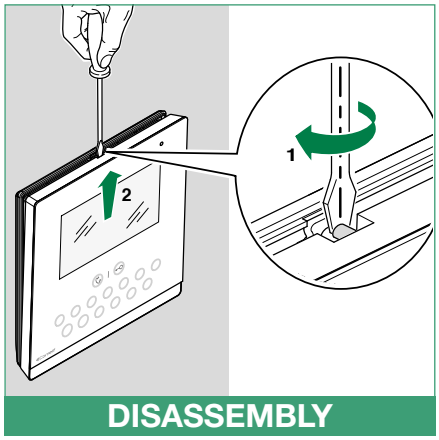

Desk-top base Art. 6612A

Article 6612A is an angle-adjustable desk base, for conversion of the Icona monitor for desk-top installation.

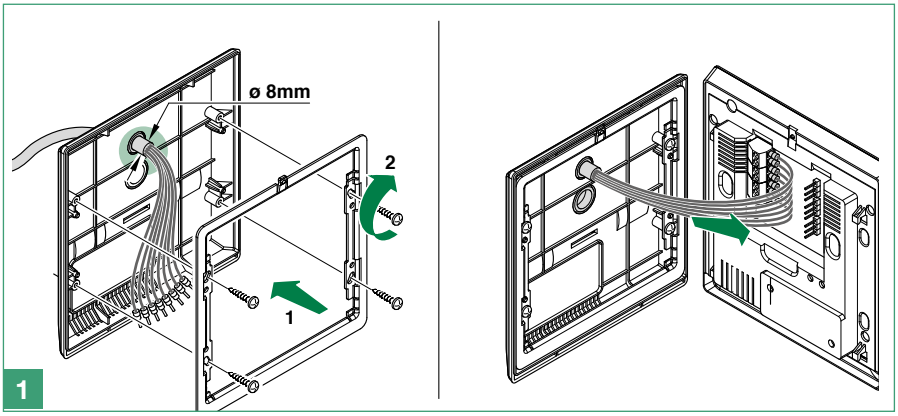

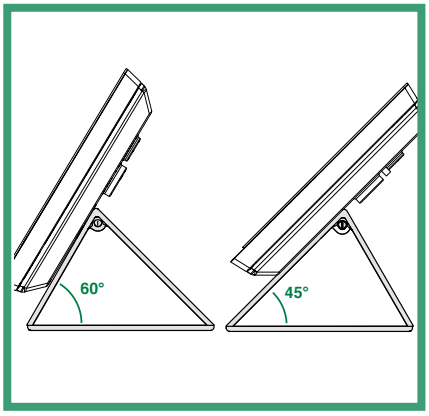

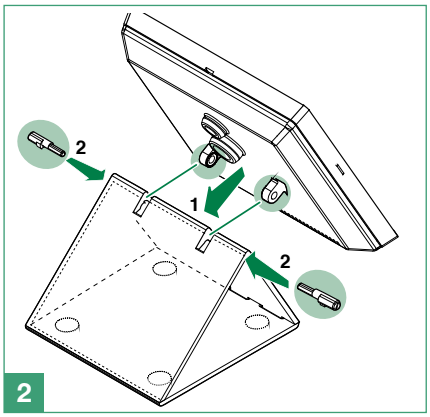

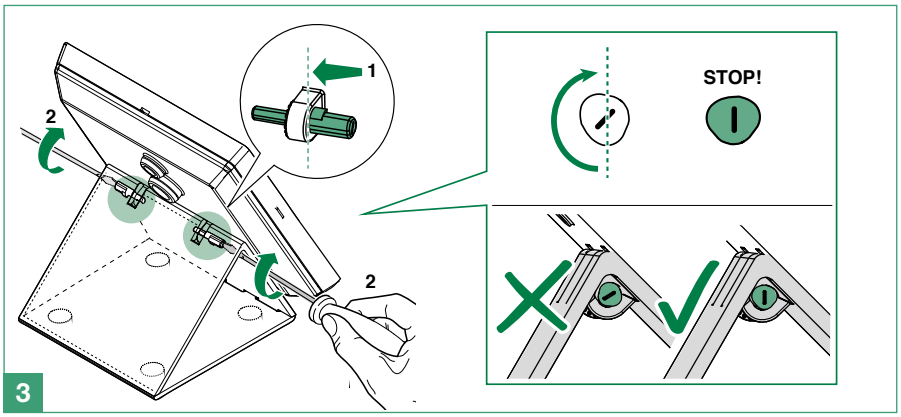

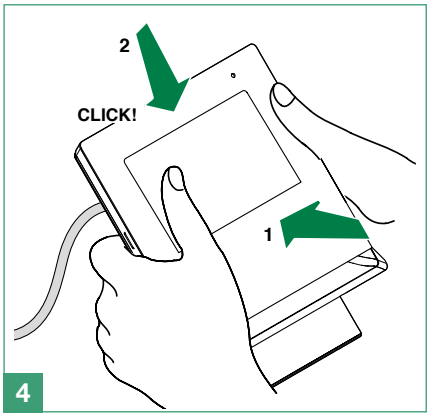

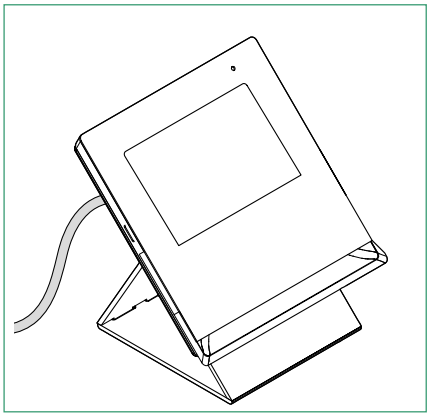

Wall-mount base Art. 6620

Article 6620 is the wall bracket for the Icona monitor.

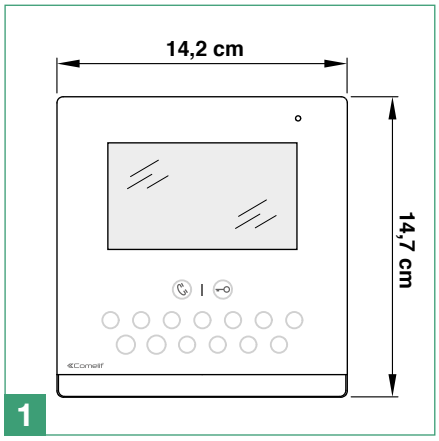

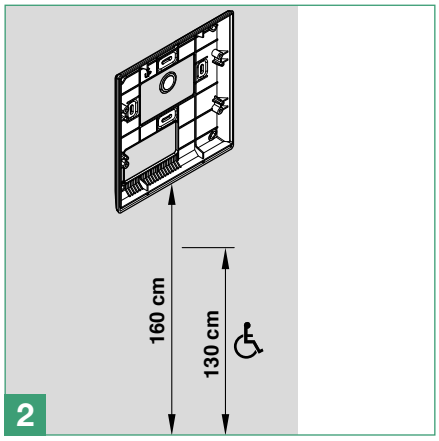

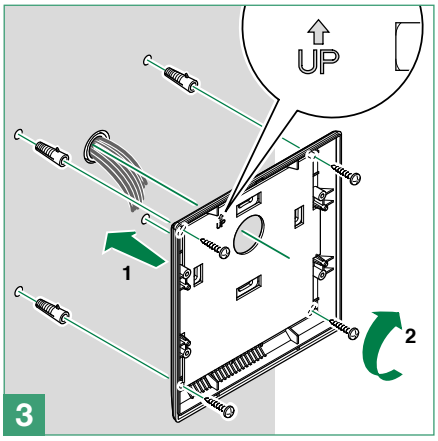

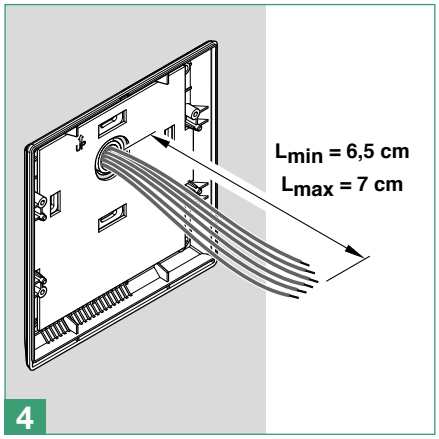

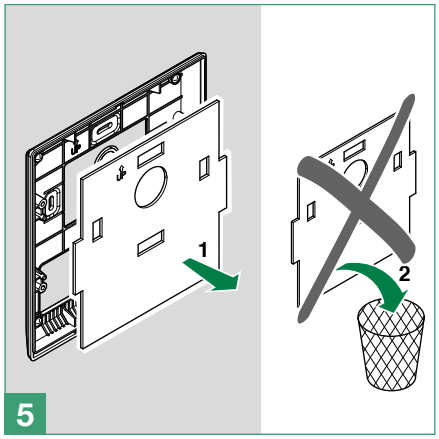

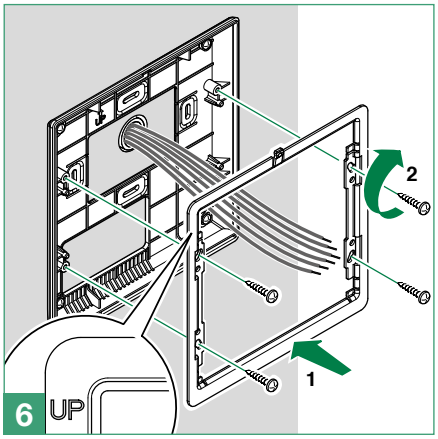

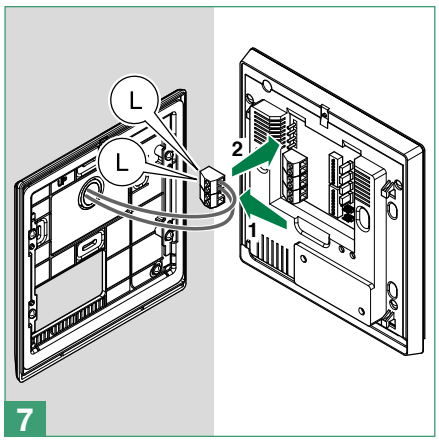

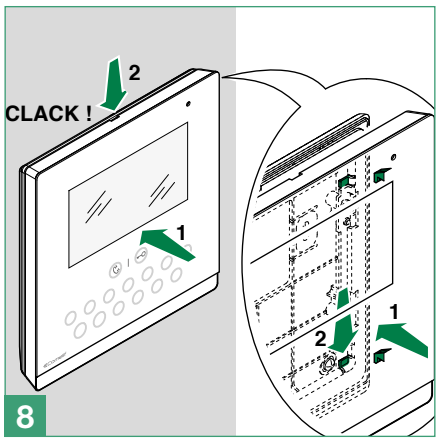

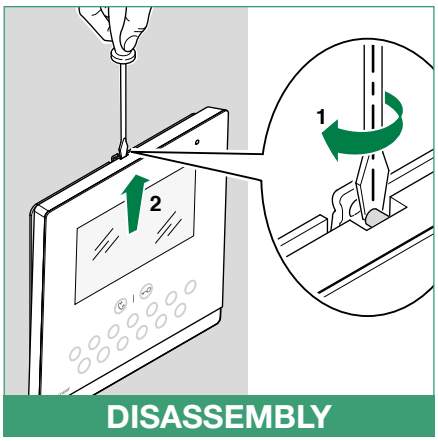

Table of contents

Warning

Description 313
- **Soft-touch key activation 314**
- **Soft-touch key description 314**
- **Indicator LED description 314**

Technical specifications 315

Installation 317
- **Mounting the 7" MAXI SBC monitor on flush-mounted box Art. 6817 .. 317**
- **Wall-mounting (Art. 6820 - optional) 318**

Connections 319
- **Variant: connection of call repetition device Art. 1122/A 319**

Monitor configuration 320
- **Standard configuration for soft-touch keys 320**
- **Activation/deactivation Doctor mode 320**
- **Activation/deactivation Automatic Answer mode 320**
- **Configuration of Main and Secondary internal units - DIP 8 of S2 .. 321**
- **Power supply configuration and management - DIP 7 of S2 ..... 321**
- **Advanced monitor configuration 322**
  - Warning 322
  - Programming for intercom call 322
    - Programming/deleting intercom address (selective intercom only) 322
    - Programming buttons for intercom call 323
    - Direct programming of intercom call 324
  - Programming keys for generic or coded actuator 325
  - Programming buttons for other functions 326
  - Programming range 327
  - LED/alarm/lock-release/actuator programming 328
  - Changing monitor ringtones 329
  - Programming reset 329

System performance and layouts 329

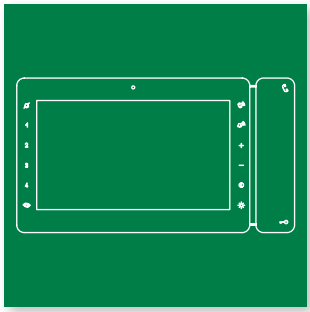

Maxi door entry monitor Art. 6801W

Description

The Maxi series is comprised of hands-free monitors that can be used in "Building Kit" (exclusively 2-wire), Simplebus Top and Kit Video systems.

- *Article 6801W is a colour monitor equipped as standard with 8 function buttons and 6 adjustment buttons.*
- *Article 6801W/BM is a colour monitor equipped as standard with 8 buttons, 6 adjustment buttons and an induction loop.*

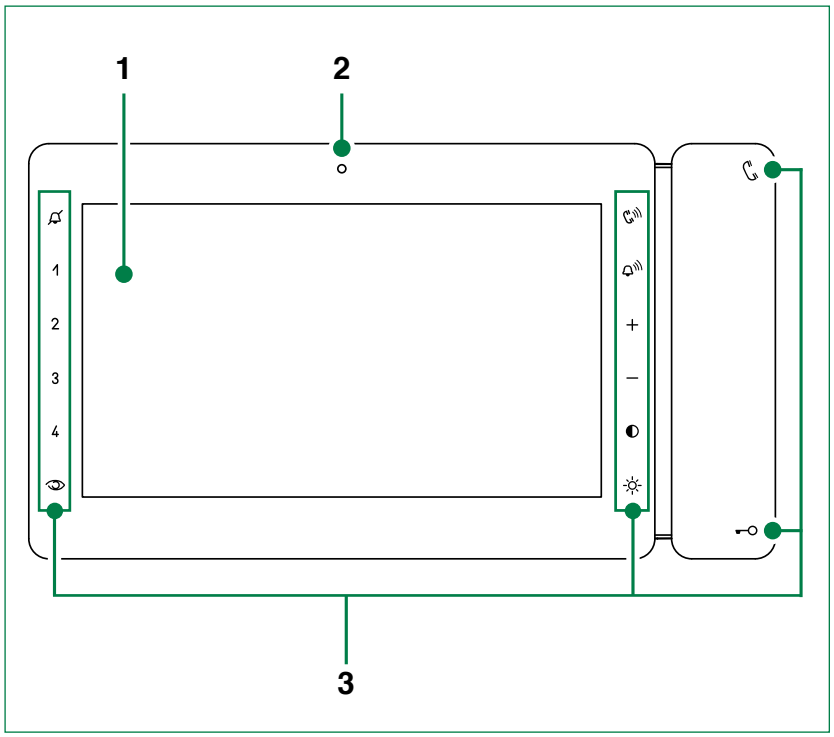

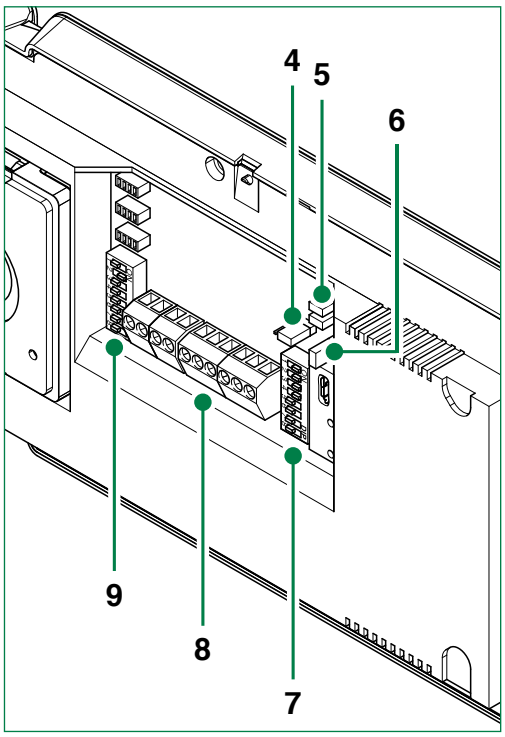

1. 7" colour LCD screen
2. Microphone
3. Soft-touch keys/Led
4. **CV6**

   position A = contact IN1-IN2 > LED (default)

   position B = contact CFP2-IN1 > ALARM/LOCK-RELEASE/ACTUATOR
5. **CV1 CV2** remove in case of separate power supply
6. **CV5** Jumper for video closure. In systems with more than one monitor connected in cascade, only the monitor furthest away must have CV5 closed.
7. **S2** Ⓟ Micro-switches for programming keys and functions

   DIP 1-2-3-4 for key function programming

   DIP 5-6 access to programming

   DIP 7 for management of power supply voltage, see **"Power supply configuration and management"**

   DIP 8 for main and secondary monitor setting, see **"Configuration of Main and Secondary internal units"**
8. Terminal block for system connection:
   CFP1 CFP2 Outside door call input
   S+ S- Terminals for additional ringtone output
   IN1 IN2 Input terminals (programmable)
   - + Power supply terminals
   L L Bus line connection terminals
9. **S1** ◇ User code programming microswitches (see **"addressing table"**)

Soft-touch key activation

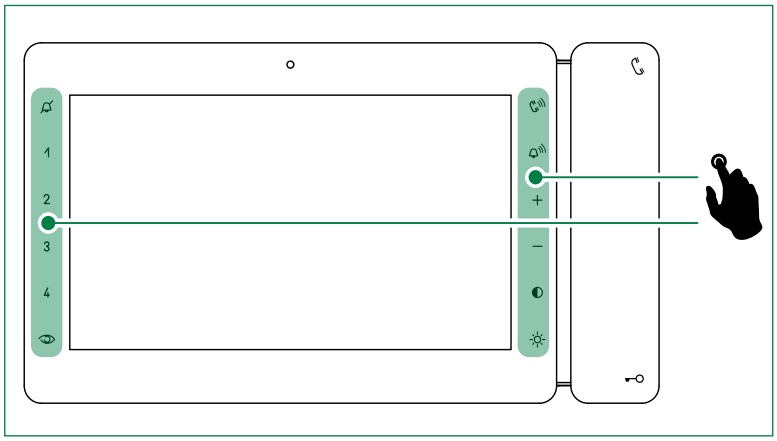

- Touch to activate the function keys
- Press the desired key once to activate the function associated with it

Wait for approximately 1 sec. before pressing the same key again. Pressing the same key several times in quick succession will cancel the command.

Soft-touch key description

Audio key
Lock-release key
1 2 3 4 Keys 1-2-3-4 (programmable)
Self-ignition key (programmable)
Privacy key
Audio volume key
Ringtone volume key
+ — Value 'Up/Down' key
Contrast key
Brightness key

Indicator LED description

Audio LED
steady = audio enabled/hands-free function
continuous flashing = call received

Lock-release LED
1 flash = confirm lock-release
4 flashes = programming successful
10 flashes = programming error
continuous flashing = door open

Privacy LED - Doctor
4 flashes = device engaged
slow flashing = programming
3 flashes (every 5 s.) = Doctor function enabled
steady = privacy function enabled

The monitor Art. 6801W is designed for use in colour systems, in the SB2 section downstream of Art. 4888C, or in systems without mixer, such as the system with 2-wire KIT or Art. 1210.

Technical specifications

MAIN SPECIFICATIONS	6801W	6801W/BM
Flush-mounted	Yes	Yes
Wall-mounted	Yes	Yes
Desk base-mounted	Yes	Yes
Hands-free function	Yes	Yes
Induction loop	-	Yes
Type of display	LCD	LCD
Display size (inches)	7" 16:9	7" 16:9
Display resolution (H x V)	800x480 pixel	800x480 pixel
B/W or colour display	Color	Color
Product colour	White RAL9003	White RAL9003
Sensitive Touch technology	Yes	Yes
Total buttons	8	8
LED signaling	14	14
COMPATIBILITY		
Simplebus Top audio/video system	Yes	Yes
Building Kit audio/video system	Yes	Yes
Kit audio/video system	Yes	Yes
FUNCTIONS		
Actuator control function	Yes	Yes
Self-ignition	Yes	Yes
Switchboard call function	Yes	Yes
Intercom function	Yes	Yes
Call forwarding	Yes	Yes
Privacy function	Yes	Yes
Redial	Yes	Yes
Floor door call function	Yes	Yes
Customisable ringtone	Yes	Yes
Alarm function	Yes	Yes
Sound diffusion control	Yes	Yes
Receiving text messages	Yes	Yes
Images reception	Yes	Yes
HARDWARE SPECIFICATIONS		
Removable terminals	Yes	Yes
SETTINGS		
Loudspeaker volume control	Yes	Yes
Microphone volume control	Yes	Yes
Ringtone volume control	Yes	Yes
Display brightness control	Yes	Yes
Display contrast control	Yes	Yes
Display colour control	Yes	Yes
GENERAL INFO		
Product height (mm)	124	124
Product width (mm)	223	223
Product depth (mm)	25	25

TECHNICAL SPECIFICATIONS	6801W	6801W/BM
Power supply voltage	22÷28Vdc	22÷28Vdc
Maximum current absorption (mA)	400	-
Power consumption stand-by (mA)	36	36
In called absorption (mA)	310	310
In communication absorption (mA)	400	400
Loudspeaker	80mm 80Ohm 1W	80mm 80Ohm 1W
Operating temperature (°C)	-5÷40	-5÷40
RH max operating humidity (%)	25 - 75 %	25 - 75 %
Clamps	CFP1 CFP2 IN1 IN2 S+ S-	CFP1 CFP2 IN1 IN2 S+ S-

Installation

Mounting the 7" MAXI SBC monitor on flush-mounted box Art. 6817

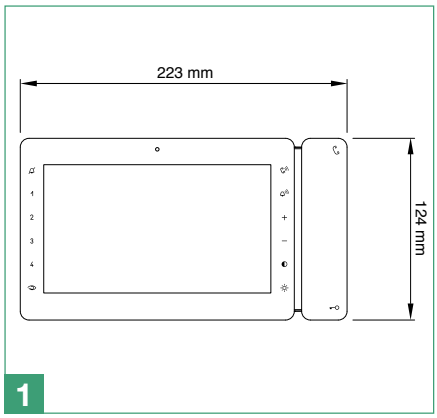

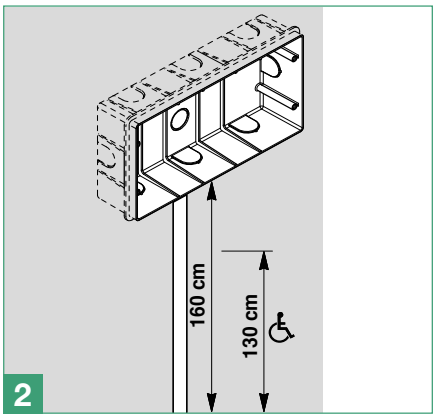

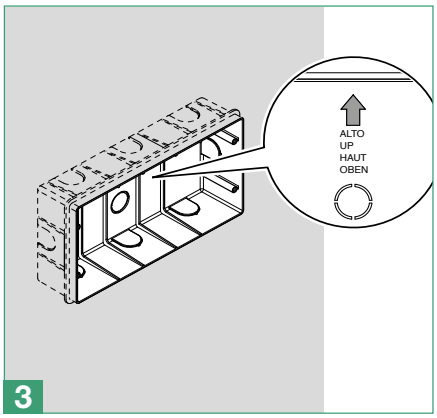

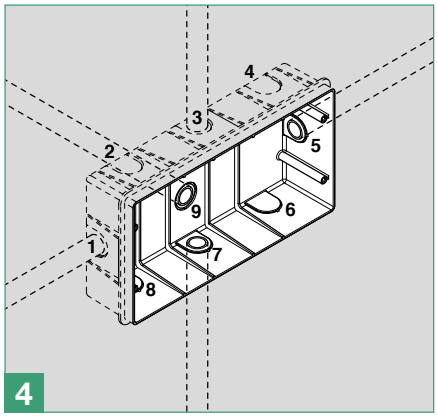

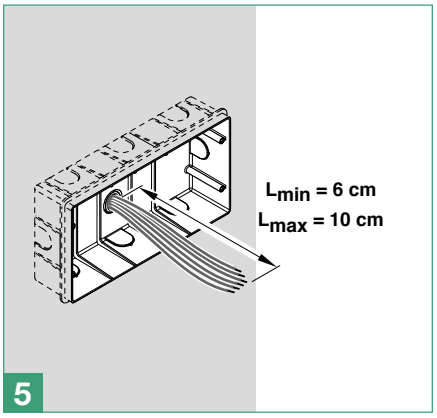

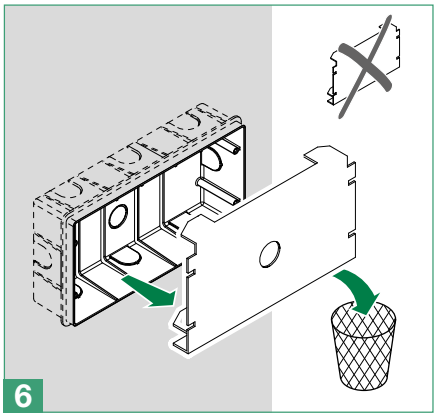

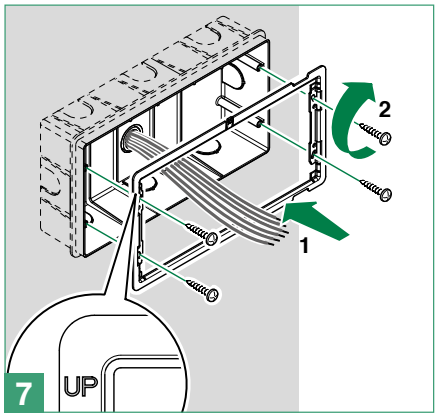

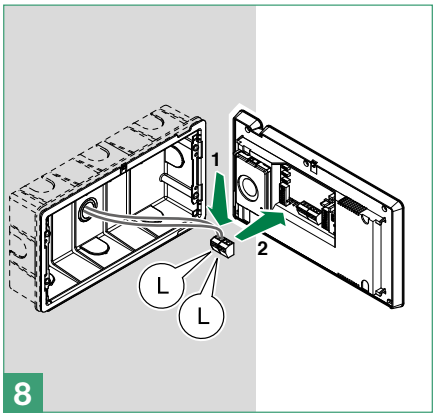

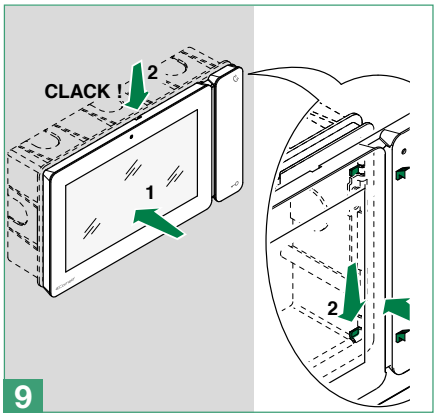

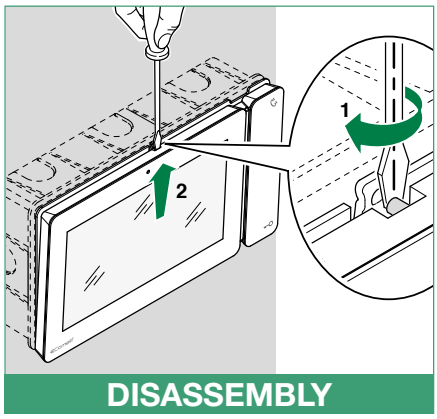

Wall-mounting (Art. 6820 - optional)

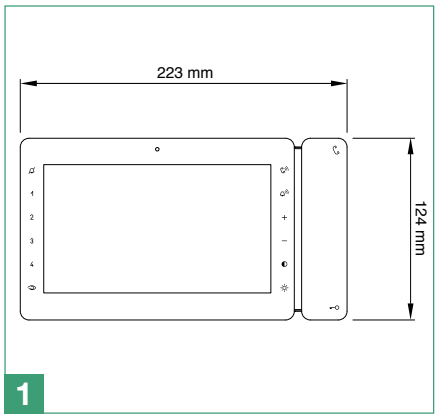

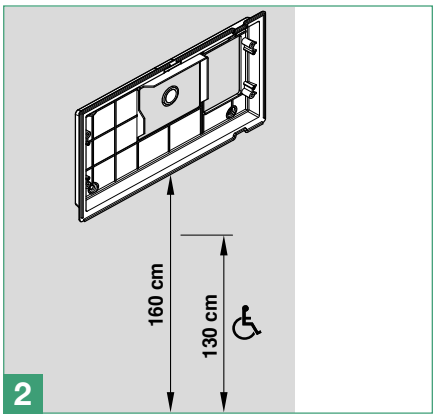

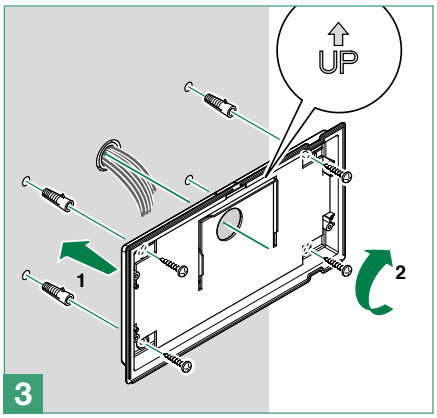

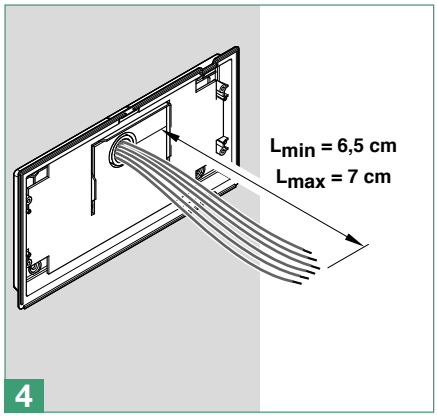

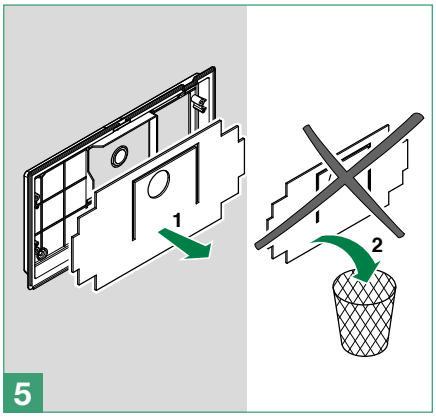

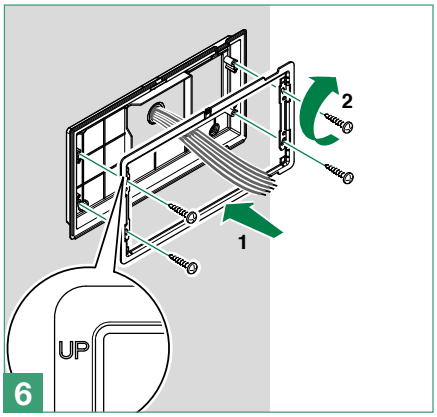

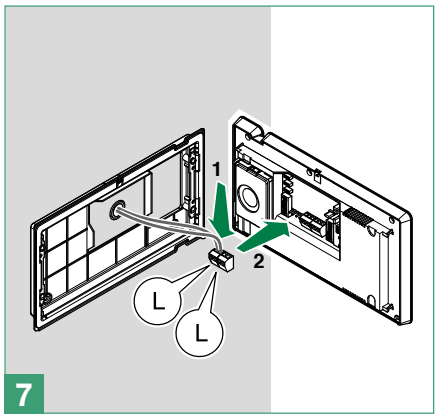

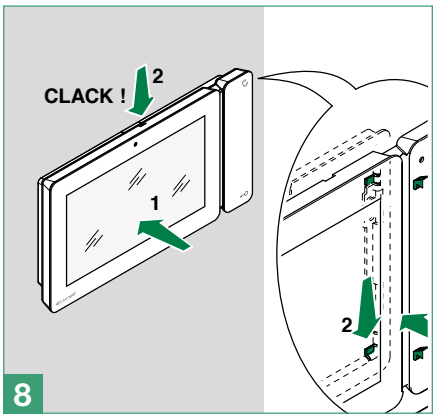

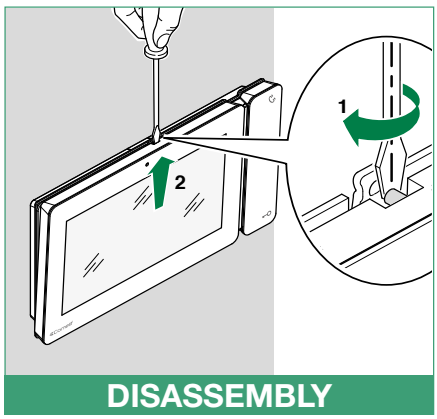

Connections

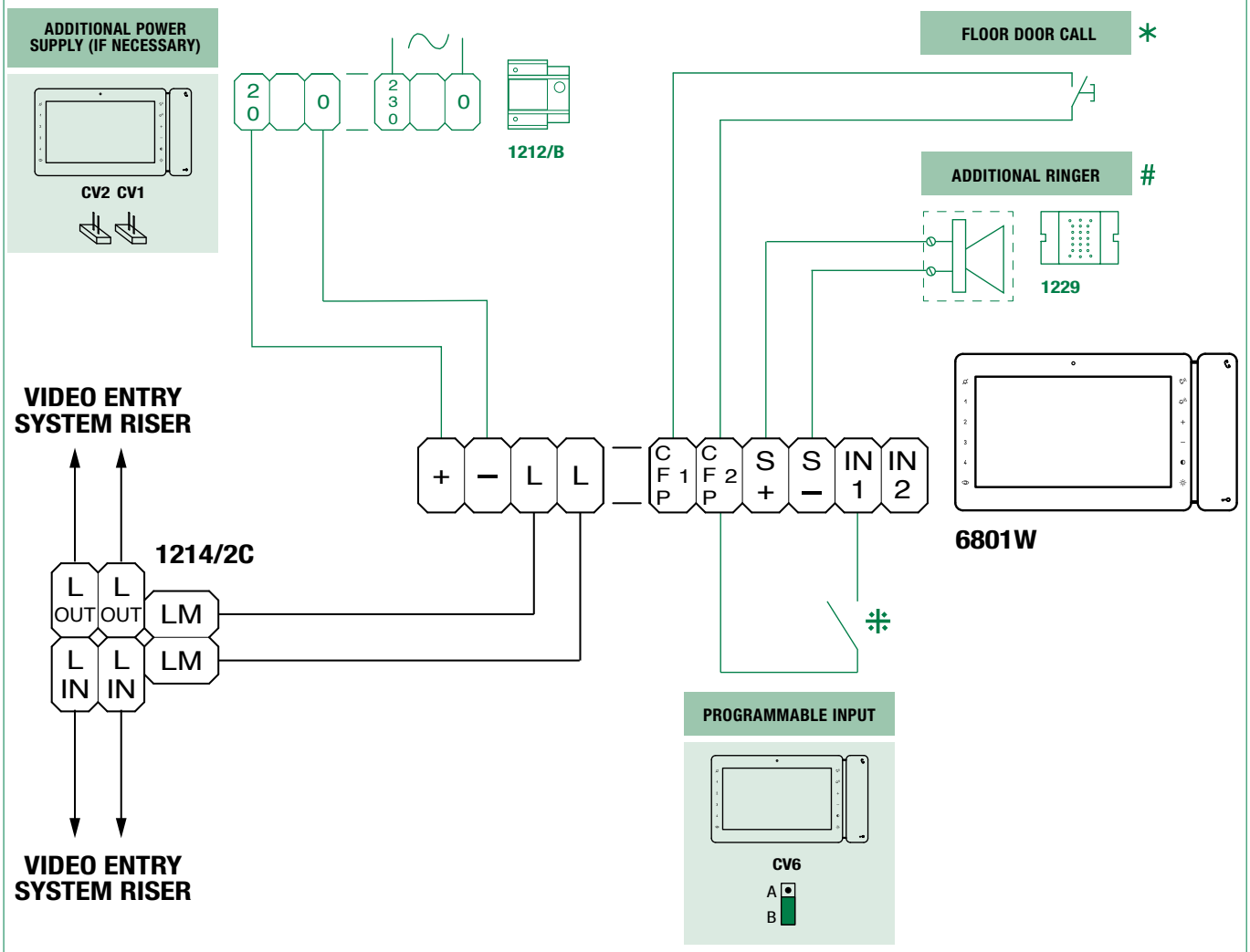

\# **20 m MAX -** Connect only one call repetition device for each user code.

* **20 m MAX** - Use shielded cable for the connection and do not route the cables in the vicinity of heavy inductive loads or power supply cables (230V/400V).
Where multiple door-entry phones or monitor backplates have the same user code, connect the CFP button on one only; all the devices will ring simultaneously.

⁜ For the programming procedure, see paragraph: **LED/alarm/lock-release/actuator programming**.

Variant: connection of call repetition device Art. 1122/A

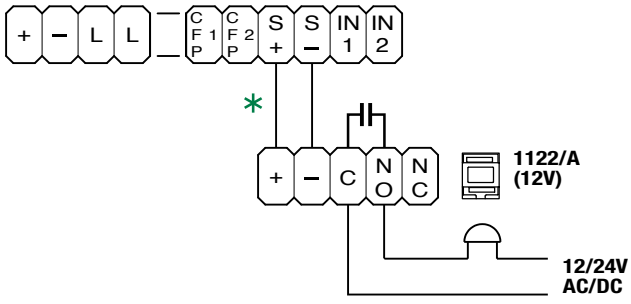

* **20 m MAX -** Connect only one call repetition device for each user code. If inductive loads are connected, the connection of 470nF capacitance in parallel with the C-NO contacts of Art. 1122/A is advisable.

Monitor configuration

	Legend
0	DIP-switch OFF
1	DIP-switch ON
🔑	**Lock- release**
📞	**Audio**
ACT	**Actuator**
AI	**Self-ignition** **
CCP	**Main switchboard call** [not for use in systems with KIT]
CCS	**Secondary switchboard call** [not for use in systems with KIT]
K	**Guardian doorentry phone call**
D	**Doctor**
PAN	**Panic** [not for use in systems with KIT]
INT	**General or selective programmable intercom** [general internal call as standard for KIT and Simplebus Top]
INTb	**Two-family intercom** [for KIT only]
NULL	**No function**
PROG	**Programmed functions, see "Advanced monitor configuration". In this DIP switch setting, the buttons control the programmed functions; the NON-programmed buttons control functions referred to on line 0000 (default).**

** **Press and hold to enable/disable the function**

Standard configuration for soft-touch keys

DIP-switch S2			
DIP 1	**DIP 2**	**DIP 3**	**DIP 4**
0	0	0	0
1	0	0	0
0	1	0	0
1	1	0	0
0	0	1	0
1	0	1	0
0	1	1	0
1	1	1	0
0	0	0	1
1	0	0	1
0	1	0	1
1	1	0	1
0	0	1	1
1	0	1	1
0	1	1	1
1	1	1	1

Programmable functions						
📞	🔑	1	2	3	4	👁
		CCS	**ACT**	**D**	**PAN**	**AI**
	🔑	**ACT**	**INT**	**INTb**	**D**	**AI**
		INT	**INTb**	**ACT**	**CCS**	**AI**
		ACT	**CCP**	**PAN**	**K**	**CCS**
	ACT	**ACT**	**ACT**	**ACT**	**ACT**	**ACT**
		INT	**CCS**	**CCP**	**INTb**	**ACT**
📞		**AI**	**K**	**CCS**	**CCP**	**D**
		INTb	**AI**	**INT**	**PAN**	**INT**
		CCS	**D**	**AI**	**INT**	**PAN**
	🔑	**K**	**PAN**	**CCP**	**AI**	**CCS**
		CCP	**PAN**	**ACT**	**INT**	**K**
		PAN	**CCS**	**K**	**ACT**	**CCP**
		D	**INT**	**ACT**	**AI**	**INTb**
		INT	**INT**	**INT**	**INT**	**INT**
NULL	**NULL**	**NULL**	**NULL**	**NULL**	**NULL**	**NULL**
PROG						

Standard configuration for DIP switches 1-2-3-4 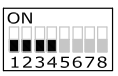

Activation/deactivation Doctor mode

- ▶ Press and hold (4 s.) the programmed key *(Default key 3)*
  - » (ACTIVATION) ♪ + 3 flashes every 5 s.
  - » (DEACTIVATION) **BEEP**

Activation/deactivation Automatic Answer mode

- ▶ Press on the audio activation key 📞 for 4sec
  - » (ACTIVATION) ♪ + audio LED with FIXED ILLUMINATION
  - » (DEACTIVATION) **BEEP** + audio LED OFF

Configuration of Main and Secondary internal units - DIP 8 of S2

- To configure an internal unit as the main unit, set **DIP8** of **S2** to **OFF**.
- To configure an internal unit as a secondary unit, set **DIP8** of **S2** to **ON**.



In systems with Art. 1209 or Art. 1210, you can configure a maximum of 1 main monitor (+ 3 separately powered) while in systems with Art. 4888C you can configure a maximum of 2 main monitors (+ 2 separately powered).

Power supply configuration and management - DIP 7 of S2

- For correct power management, the DIP switch should be set in accordance with the type of system and its configuration:
- **in systems with power supply units 1209 and1210:** always set the DIP switch to **ON**
- **in systems with power supply unit 4888C:** for secondary internal units, always set the DIP switch to **OFF**, for main internal units, follow the indications given in the examples in the figure below:

  A. 1 main internal unit,

  B. 2 main internal units,

  C. 3 main internal units of which 1 is powered separately.

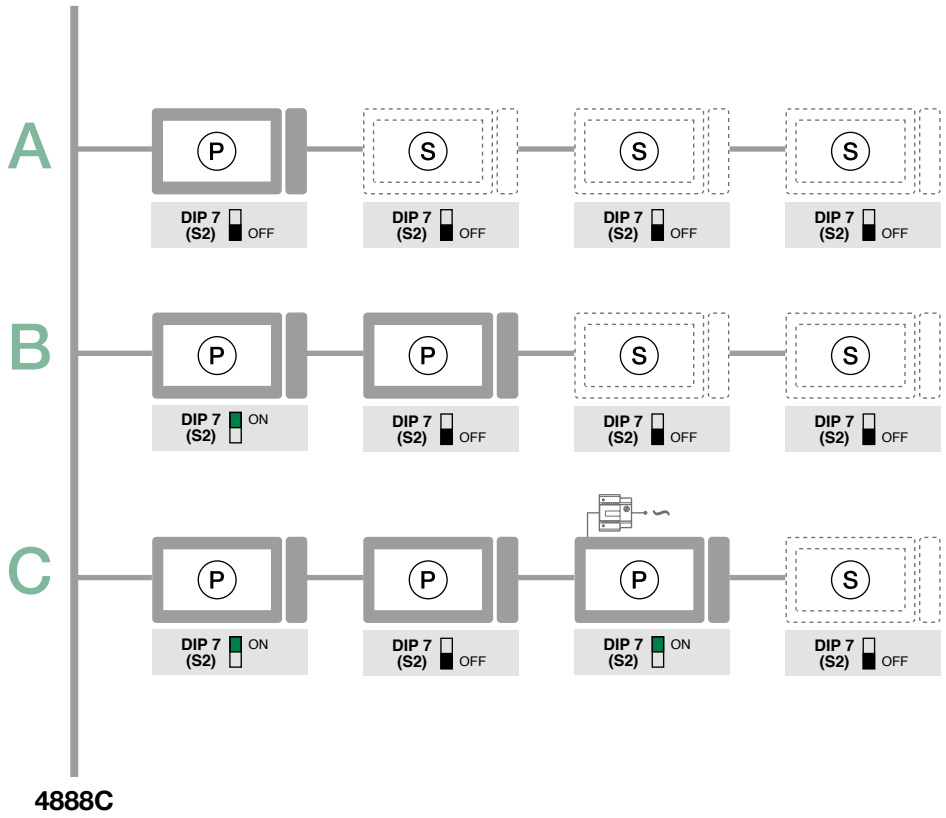

Advanced monitor configuration

Warning

If the default settings (see table **"Standard configuration for soft-touch keys"**) do not reflect requirements, the keys can be programmed differently by carrying out the steps below.
At the end, set S2 DIP switches 1-2-3-4 to the combination 1111 (PROG setting in the configuration tables "Advanced monitor configuration"). In this dip switch setting, the keys control the programmed functions; the NON-programmed keys control functions referred to on line 0000 (see table "Standard configuration for soft-touch keys". Restore the user code setting on S1, see "addressing table".

Programming for intercom call

General intercom: function allowing calls to one or more internal units identified by the same call address as used by the external unit.
Selective intercom: function allowing calls to one or more internal units identified by a dedicated call address (see table B) which is different from the one used by the external unit.
General and selective intercoms CANNOT be used together on the same riser.

Programming/deleting intercom address (selective intercom only)

Take note of the S2, S1 setting and restore it when programming is complete

1)	2)	3)	
Programming; set code, table B S1 ON 1 2 3 4 5 6 7 8	S2 DIP: 1 2 3 4 5 6 / 0 0 0 1 1 1; S2 ON 1 2 3 4 5 6 7 8	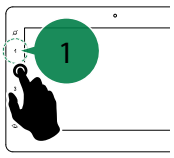	
Cancellation **DIP ON** S1 ON 1 2 3 4 5 6 7 8	S2 DIP: 1 2 3 4 5 6 / 1 1 1 1 1 1; S2 ON 1 2 3 4 5 6 7 8	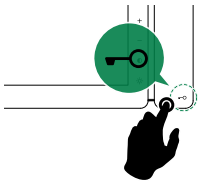	

Selective intercom addresses

You must set the intercom address on all the riser's internal units.
You can assign the same intercom address to a maximum of 3 internal units.
For group calls, select the desired intercom codes simultaneously (max. 3).

TAB. B

Code	DIP switch ON	S1	Code	DIP switch ON	S1
1	1		5	5	
2	2		6	6	
3	3		7	7	
4	4		8	8	

Comelit

Programming buttons for intercom call

DIP-switch S2												DIP S1
DIP 1	DIP 2	DIP 3	DIP 4	📞	🔑	1	2	3	4	👁		
0	0	0	0	📞	🔑							ADDRESS
1	0	0	0	📞	🔑		INT	INTb				
0	1	0	0	📞	🔑	INT	INTb					
1	1	0	0	📞	🔑							
0	0	1	0	📞								
1	0	1	0	📞	🔑	INT			INTb			
0	1	1	0	📞	🔑							
1	1	1	0	📞	🔑	INTb		INT		INT		
0	0	0	1	📞	🔑				INT			
1	0	0	1	📞	🔑							
0	1	0	1	📞	🔑				INT			
1	1	0	1	📞	🔑							
0	0	1	1	📞	🔑		INT			INTb		
1	0	1	1	📞	🔑	INT	INT	INT	INT	INT		
0	1	1	1									
1	1	1	1	PROG								

Example 1 - all systems (INCLUDING KITS!) - General intercom
on a monitor with user code 5, P2 programming = general internal call, P3 = general intercom with address 9

Example 2 - Selective intercom
on a monitor with user code 1 and intercom address 1, P2 programming = selective intercom with address 2, P3 = selective intercom with address 3

1. Set S2 DIP switches 6 to the combination 1.
   - » the privacy LED 🔔 flashes.

S2 DIP						
1	2	3	4	5	6	S2
0	0	0	0	0	1	

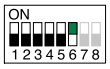

⇒ 🔔

2. Refer to the table **"Programming buttons for intercom call"** and select a combination in which the intercom function (either INT or INTb) is listed for the buttons you wish to program.
   EXAMPLE 1: for P2= general internal call, set S2 DIP switches 1-2-3-4 to the combination 1000 or 0011 or 1011 (P2=INT) or 0100 (P2=INTb) and set S1 with address 5 as per **"addressing table"**, then go to point 3
   EXAMPLE 1: for P3= general intercom, set S2 DIP switches 1-2-3-4 to the combination 1110 or 1011 (P3=INT) or 1000 (P3=INTb) and set S1 with address 9 as per **"addressing table"**, then go to point 3
   EXAMPLE 2: for P2= selective intercom, set S2 DIP switches 1-2-3-4 to the combination 1000 or 0011 or 1011 (P2=INT) and set S1 with address 2 as **table B**, then go to point 3
   EXAMPLE 2: for P3= selective intercom, set S2 DIP switches 1-2-3-4 to the combination 1110 or 1011 (P3=INT) and set S1 with address 3 as **table B**, then go to point 3.
3. Press and release the key to be associated with the function
   - » the lock-release LED 🔑 flashes 4 times.
   - » a confirmation tone will sound.
4. To exit programming mode, set S2 DIP switches 5-6 to the combination 00
   - » the privacy LED 🔔 switches off
5. **When programming is complete, set S2 DIP switches 1-2-3-4 to the combination 1111. Restore the user code setting on S1, see "addressing table".**

Direct programming of intercom call

Allows direct programming of intercom call via the internal units.

✓ Requires 2 operators

Step 1: enter programming mode

Operator 1 and Operator 2 carry out the following procedures on 2 internal units:

1. Set S2 DIP switches 1-2 -3-4 to the combination 1111
2. Press the Key and Self-ignition button for 2 seconds.
   - » The internal unit emits 1 tone.
   - » The privacy LED flashes.
   - » The audio button LED lights up.
   - » The internal unit enters audio mode.
   - » At this point the 2 operators will be communicating with each other.

Step 2: intercom call programming

Operator 1:

- ▶ Press the key you want to program to call operator 2 (e.g. 2).
  - » The internal unit manned by operator 1 emits a confirmation tone.

Operator 2:

- ▶ Press the key you want to program to call operator 1 (e.g. 1).
  - » The internal unit manned by operator 2 emits a confirmation tone.

Operator 1/ Operator 2:

- ▶ Press the audio key .
  - » The audio button LED goes OFF.
  - » Programming of the 2 internal units is now complete.

To program another internal unit, move on to STEP 3.

Step 3: programming other internal units

Operator 1/ Operator 2:

1. Once the new station has been reached, carry out step 1 to begin communication
2. Repeat step 2

NOTE If a call is received during programming, it must be answered and the programming procedure resumed afterwards.

Programming keys for generic or coded actuator

DIP-switch S2												DIP S1
DIP 1	DIP 2	DIP 3	DIP 4	📞	🔑	1	2	3	4	👁	PROG	
0	0	0	0	📞	🔑		ACT					ADDRESS
1	0	0	0	📞	🔑	ACT						
0	1	0	0	📞	🔑			ACT				
1	1	0	0	📞	🔑	ACT						
0	0	1	0	📞	ACT	ACT	ACT	ACT	ACT	ACT		
1	0	1	0	📞						ACT		
0	1	1	0	📞								
1	1	1	0	📞								
0	0	0	1	📞								
1	0	0	1		🔑							
0	1	0	1		🔑			ACT				
1	1	0	1		🔑				ACT			
0	0	1	1		🔑			ACT				
1	0	1	1		🔑							
0	1	1	1									
1	1	1	1									

Example:
on a monitor with user code 5, P1 programming = generic actuator, 👁 = coded actuator (code 125)

Take note of the DIP-switch settings

1. Set S2 DIP switches 6 to the combination 1.

» the privacy LED 🔔 flashes.

S2 DIP						
1	2	3	4	5	6	S2
0	0	0	0	0	1	



2. Refer to the table **"Programming keys for generic or coded actuator"** select a combination in which the actuator function (ACT) is listed for the buttons you wish to program.
E.g.: for P1= generic actuator, set S2 DIP switches 1-2-3-4 to the combination 1000 or 1100 or 0010 (P1=ACT), set S1 DIP switches to the combination 11111111, then go to point 3.
E.g.: for 👁 = coded actuator (code 125), set S2 DIP switches 1-2-3-4 to the combination 0010 or 1010 (👁 =ACT), set S1 with address 125 as per **"addressing table"**, then go to point 3.

3. Press and release the key to be associated with the function.

» the lock-release LED 🔑 flashes 4 times.

» a confirmation tone will sound.

4. To exit programming mode, set S2 DIP switches 5-6 to the combination 00.

» the privacy LED 🔔 switches off.

5. When programming is complete, set S2 DIP switches 1-2-3-4 to the combination 1111. Restore the user code setting on S1, see "addressing table".

Programming buttons for other functions

DIP-switch S2				Programmable functions							DIP S1
DIP 1	DIP 2	DIP 3	DIP 4	📞	🔑	1	2	3	4	👁	
0	0	0	0			CCS		D	PAN	AI	
1	0	0	0		🔑				D	AI	
0	1	0	0						CCS	AI	
1	1	0	0				CCP	PAN	K	CCS	
0	0	1	0								
1	0	1	0				CCS	CCP			
0	1	1	0	📞		AI	K	CCS	CCP	D	ADDRESS
1	1	1	0				AI		PAN		ON 12345678
0	0	0	1			CCS	D	AI		PAN	
1	0	0	1		🔑	K	PAN	CCP	AI	CCS	
0	1	0	1			CCP	PAN			K	
1	1	0	1			PAN	CCS	K		CCP	
0	0	1	1			D			AI		
1	0	1	1								
0	1	1	1	NULL	NULL	NULL	NULL	NULL	NULL	NULL	
1	1	1	1	PROG							

Example:
on a monitor with user code 5, P4 programming = self-ignition, P1 = Doctor.

1. Set S2 DIP switches 6 to the combination 1.

» the privacy LED 🔔 flashes.

S2 DIP						S2	ON 12345678	⇒	🔔
1	2	3	4	5	6				
0	0	0	0	0	1				

2. Refer to the table **"Programming buttons for other functions"** and select a combination in which the desired/necessary functions are listed for the buttons you wish to program.
E.g.: for P4= self-ignition, P1 = Doctor, set S2 DIP switches 1-2-3-4 to the combination 0011 (P4=AI, P1=D).

3. Press and release the keys to which you wish to assign the functions

» the lock-release LED 🔑 flashes 4 times.

» one confirmation tone is emitted.

4. To exit programming mode, set S2 DIP switches 5-6 to the combination 00

» the privacy LED 🔔 switches off.

5. When programming is complete, set S2 DIP switches 1-2-3-4 to the combination 1111.

Programming range

Take note of the S2, S1 setting and restore it when programming is complete

▶ Carry out steps 1 to 4

	1)	2)	3)		4)
Range minimum address	S1 ON 1 2 3 4 5 6 7 8 set code, **"addressing table"**	S2 DIP: 1 2 3 4 5 6 / 0 0 0 0 1 0 S2 ON 1 2 3 4 5 6 7 8 ⇓	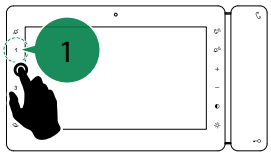	OK Prog. x4 KO Prog. x10	S2 ON 1 2 3 4 5 6 7 8 ⇓
Range maximum address			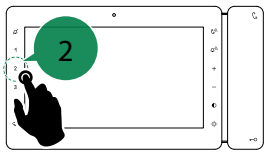		
Enable range			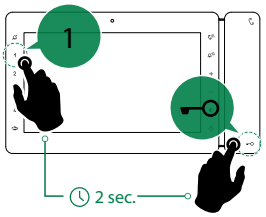		
Disable range			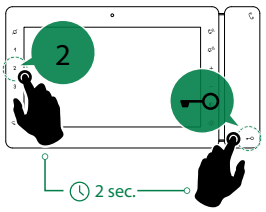		
Deleting the range	DIP ON S1 ON 1 2 3 4 5 6 7 8	S2 DIP: 1 2 3 4 5 6 / 1 1 1 1 1 0 S2 ON 1 2 3 4 5 6 7 8 ⇓	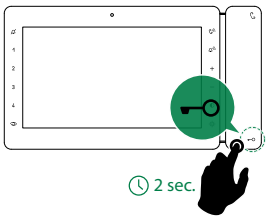		

LED/alarm/lock-release/actuator programming

Take note of the S2, S1 setting and restore on completion of programming

▶ Carry out steps 1 to 4

	1)	2)	3)		4)
Input IN 1- IN 2 ⟹ LED (default)*		S2 DIP 1 2 3 4 5 6 / 0 0 0 1 1 0; S2 ON 1 2 3 4 5 6 7 8 ⇓	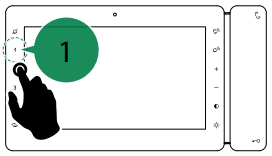	OK Prog. x4 / KO Prog. x10	S2 ON 1 2 3 4 5 6 7 8 ⇓
Input CFP2 - IN 1 ⟹ ALARM*			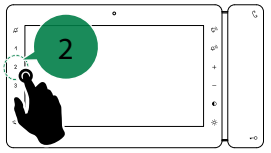		
Input CFP2 - IN 1 ⟹ LOCK-RELEASE*		S2 DIP 1 2 3 4 5 6 / 0 0 1 0 1 0; S2 ON 1 2 3 4 5 6 7 8 ⇓	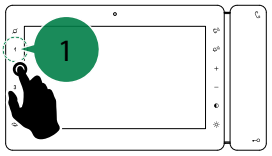		
Input CFP2 - IN 1 ⟹ CODED ACTUATOR*	S1 ON 1 2 3 4 5 6 7 8 set code, "addressing table"		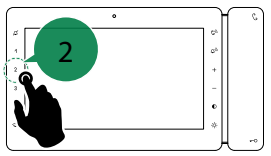		
Input CFP2 - IN 1 ⟹ GENERIC ACTUATOR*	DIP ON S1 ON 1 2 3 4 5 6 7 8		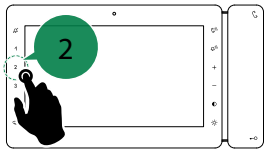		

* See "Connections".

Changing monitor ringtones

1. Keep the ⊸O button pressed until a confirmation tone is emitted (this operation is only possible with the system in stand-by; otherwise the signalling LED will flash to warn the user)
2. Press and release the ⊸O button:
   once (1 confirmation tone is emitted) to change the ringtone of calls from the external unit.
   twice (2 confirmation tones are emitted) to change the ringtone for calls from the switchboard.
   3 times (3 confirmation tones are emitted) to change the ringtone for intercom calls made from the internal unit.
   4 times (4 confirmation tones are emitted) to change the floor door ("CFP") call ringtone.
   Any further pressing of the ⊸O repeats the sequence described above.
3. Press and release button 1 to scroll through the various available ringtones in sequence.
4. Press button 2 to confirm selection of the last ringtone heard and to exit (at any time) the monitor ringtone change mode. On exiting the monitor ringtone selection mode a confirmation tone will be emitted.

Programming reset

Factory settings:

- Button functions for the S2 DIP switch 1-2-3-4 combination;
- Intercom address absent;
- Range function and min./max. addresses absent;
- Ringtone reset.
- Input IN 1 - IN 2 > LED (default).
- Doctor, Privacy and Hands Free functions disabled.

Take note of the S2, S1 setting and restore on completion of programming

1)	2)	3)
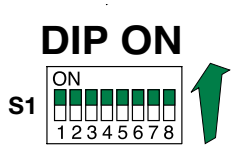	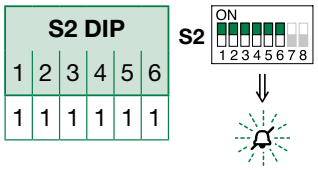	

System performance and layouts

For further information of system performance and to view installation layouts, click on the system type that best meets your requirements:

- **Audio/video kit** for the creation of audio-video systems for *individual residences*.
- **Building Kit audio/video system** for the creation of audio-video systems for *small apartment blocks.*
- **SBTOP audio/video system** for the creation of audio-video systems for *residential complexes.*

Table of contents

Warning

Flush-mount box Art. 6817 331

Kit for fixing to plasterboard Art. 6118 332

Wall-mount support Art. 6820 333

Flush-mount box Art. 6817

Article 6817 is the desktop base for the Icona monitor.

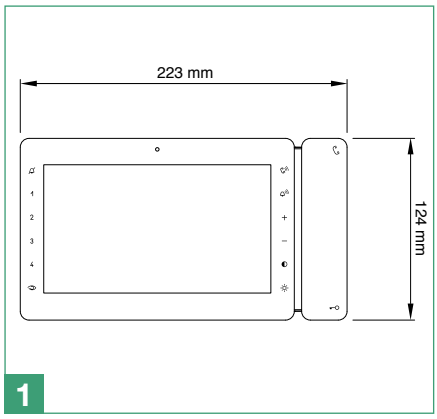

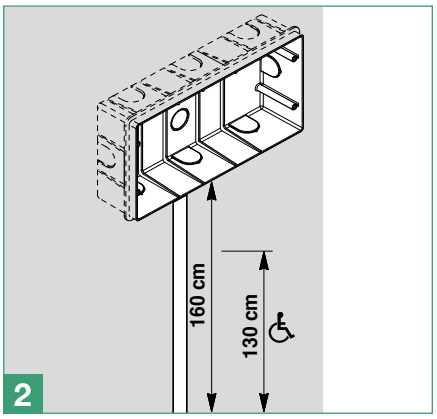

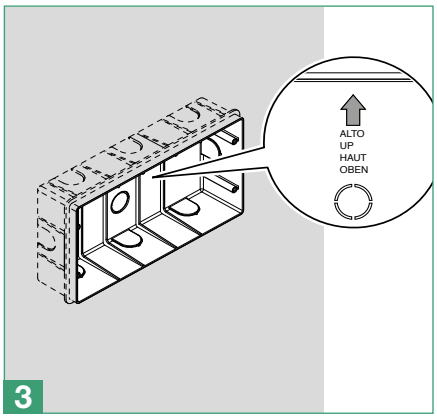

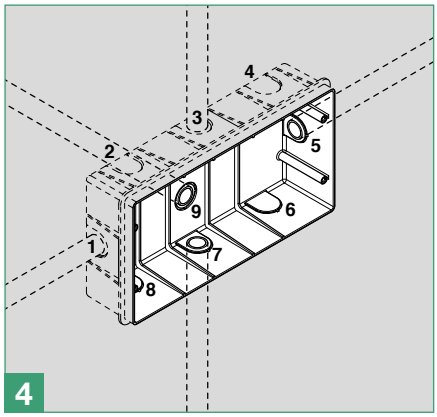

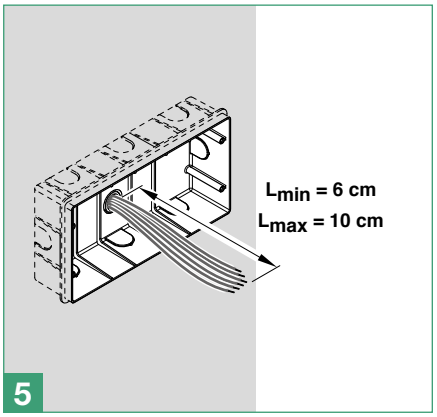

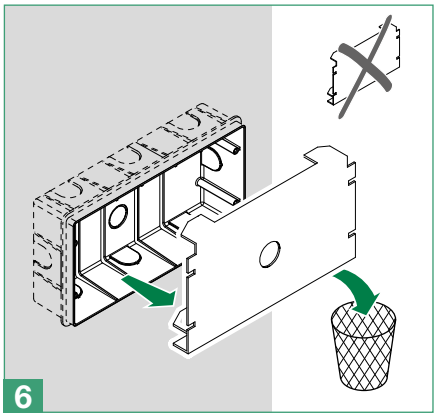

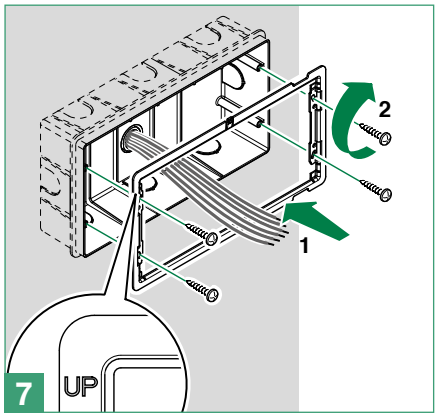

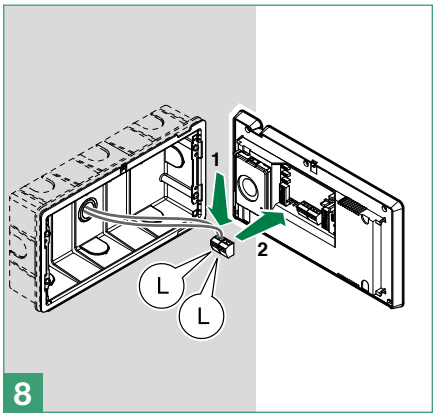

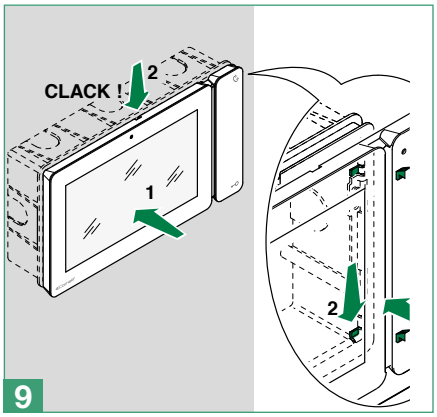

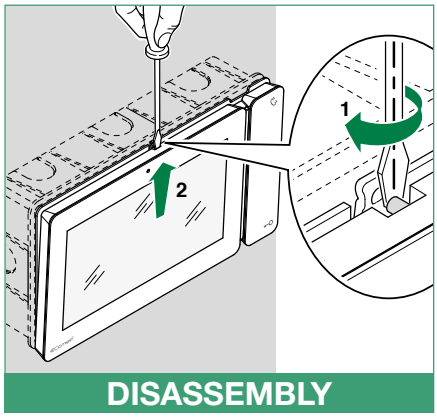

DISASSEMBLY

Kit for fixing to plasterboard Art. 6118

Article 6118 is a kit for fixing the monitor to plasterboard walls.

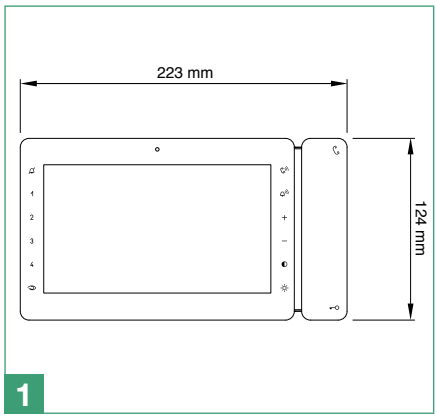

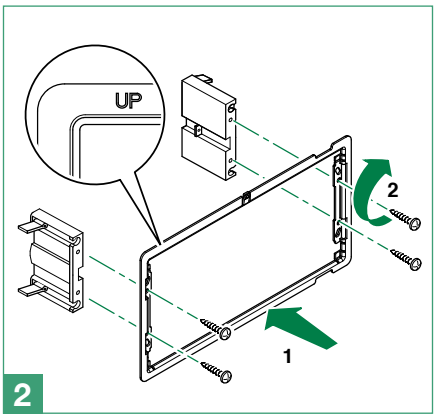

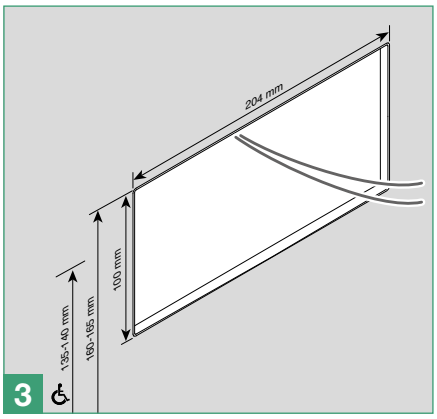

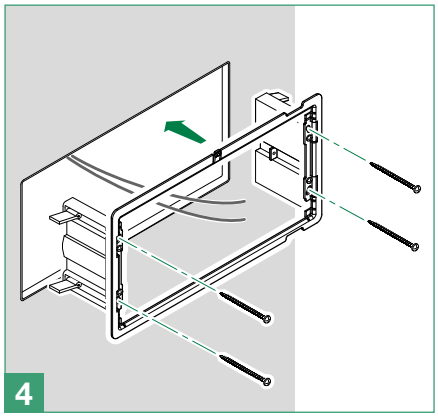

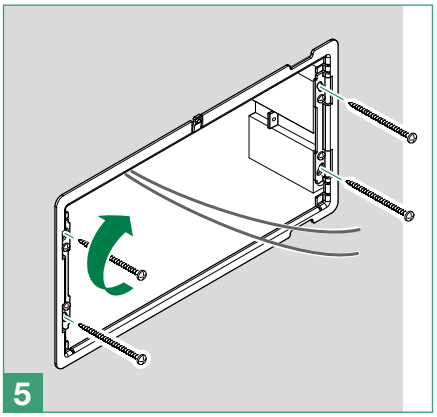

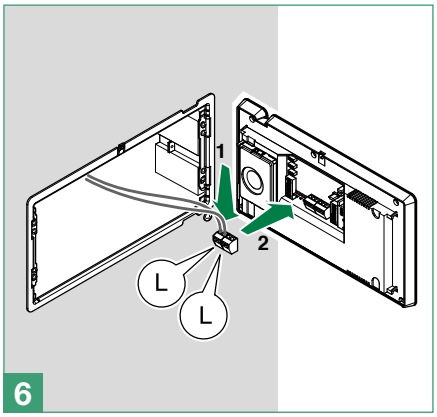

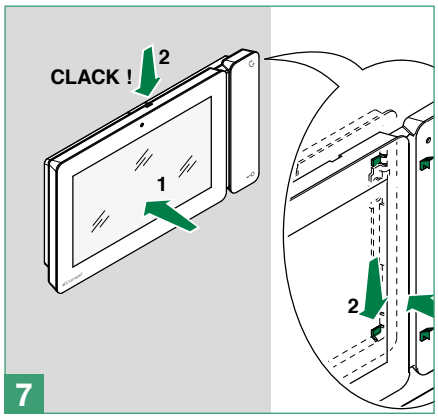

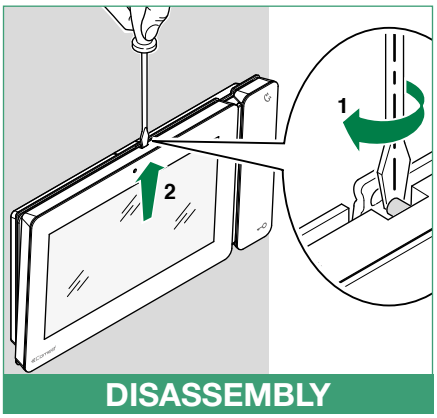

Wall-mount support Art. 6820

Article 6820 s the wall bracket for the Maxi monitor.

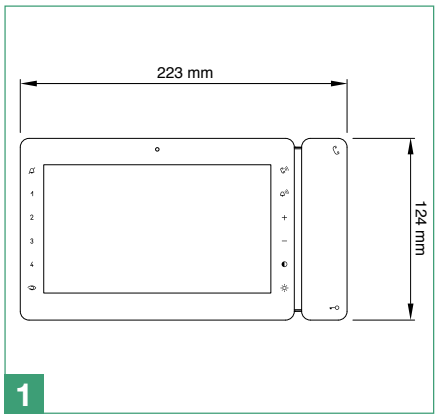

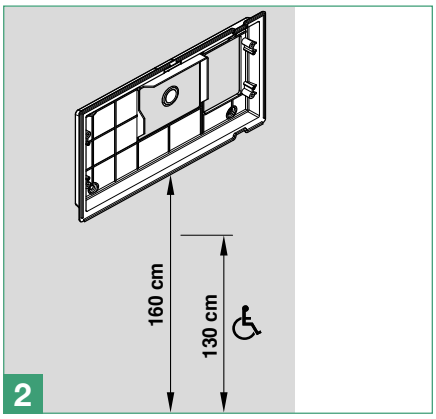

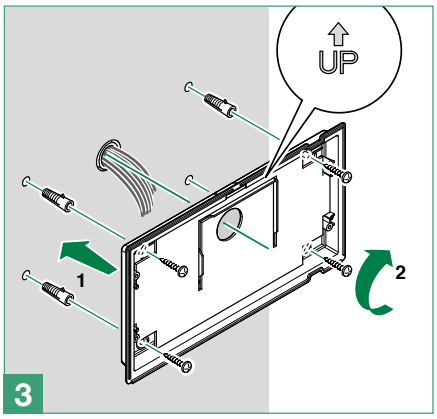

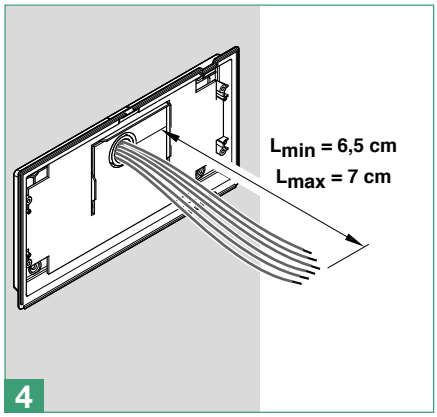

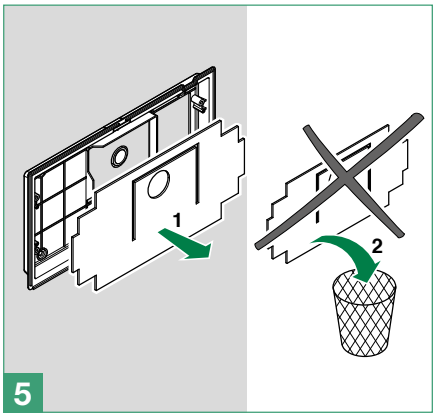

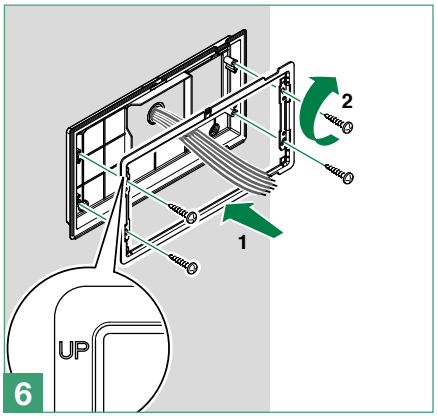

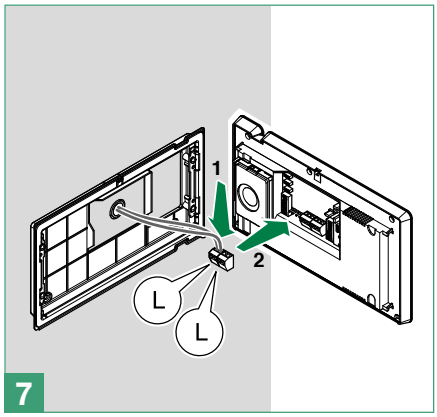

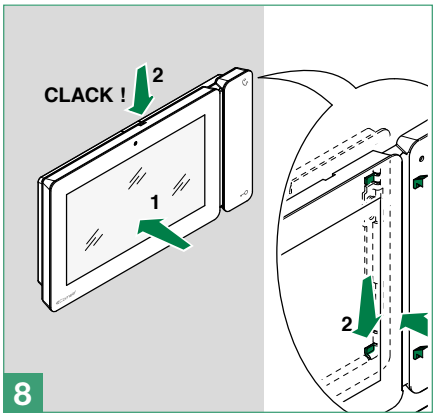

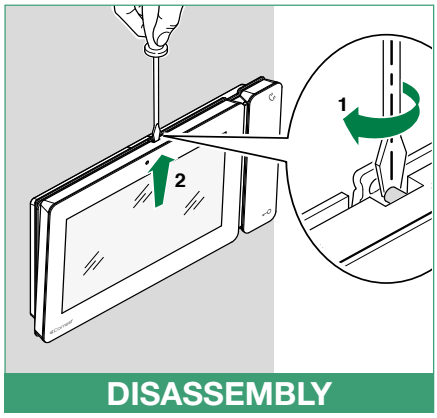

Table of contents

Warning

Description 335

Technical specifications 336

Installation 337

Connections 338

Connection to the video entry system riser 338

Branched connection to the video entry system riser from the internal video unit 338

Programming 339

System performance and layouts 339

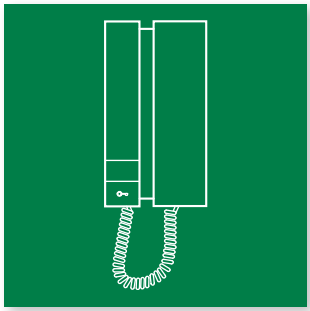

Door-entry phone Art. 2738W

Description

Article 2738W is a door-entry phone complete with 1 key button, 1 P1 button and a 3-position ringtone / Privacy service selector. Can be used in “Building Kit” systems (exclusively 2-wire).

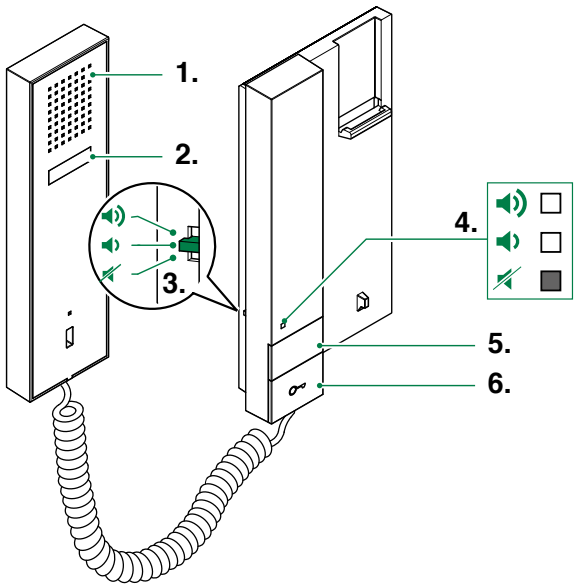

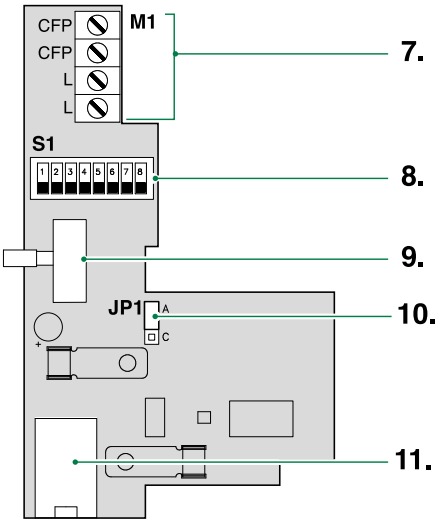

1. Loudspeaker

2. Audio hook

Do not press and hold the audio hook while the handset is lifted

3. 3-position ringtone / Privacy selector:

High position: Maximum ringtone volume

Middle position: Medium ringtone volume

Low position: Privacy activation (Privacy service means exclusion of the call ringtone from the external unit and switchboard)

4. Red indicator signaling: Privacy service active

5. P1 button for switchboard call / Generic actuator

6. Key button

7. Terminal block **M1**:

CFP CFP	floor door call input
LL	BUS line connection

8. DIP-switch for setting user code (See **“addressing table”**).

9. Bell / Privacy selector

10. JP1 jumper for selecting the Generic actuator / Switchboard call function of button P1



C Switchboard



A Generic Actuator

11. Handset connector

Technical specifications

MAIN SPECIFICATIONS	
Audio system	Yes
Audio/video system	Yes
Wall-mounted	Yes
Desk base-mounted	Yes
Product colour	White
Total buttons	2
LED signaling	No

FUNCTIONS	
Actuator control function	Yes
Switchboard call function	Yes
Privacy function	Yes
Floor door call function	Yes
Electronic bell	Yes

SETTINGS	
Loudspeaker volume control	Yes
Microphone volume control	No
Ringtone volume control	Yes

GENERAL INFOI	
Product height (mm)	190
Product width (mm)	103
Product depth (mm)	30

TECHNICAL SPECIFICATIONS	
Power supply voltage	22÷35 Vdc
Power consumption stand-by (mA)	0,5÷0,710 Vdc
In called absorption (mA)	25÷30 mA
In communication absorption (mA)	23÷30 mA
Microphone	Ø 9,6 x 6,9 mm
Loudspeaker	Ø 0,50 mm ; Max Imput Power 0,5W
IP Rating	30
Operating temperature (°C)	-5÷40
Product weight (g)	0,257 Kg
Clamps	L,L,CFP,CFP

Installation

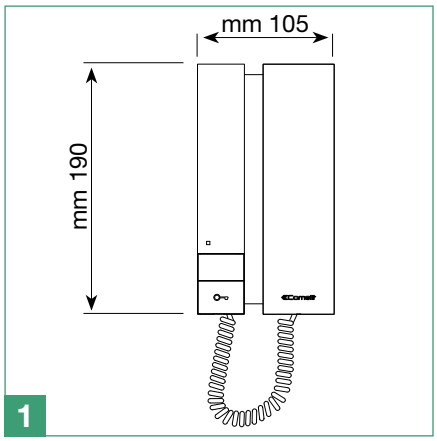

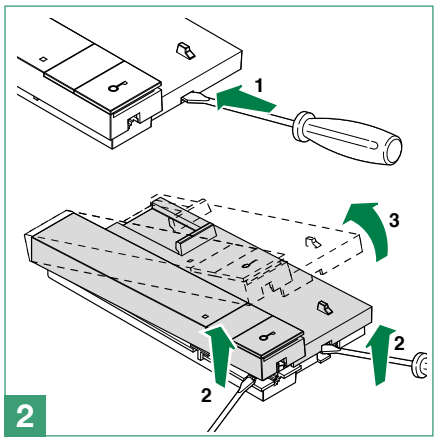

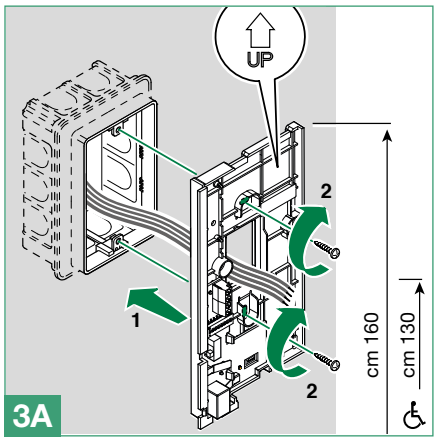

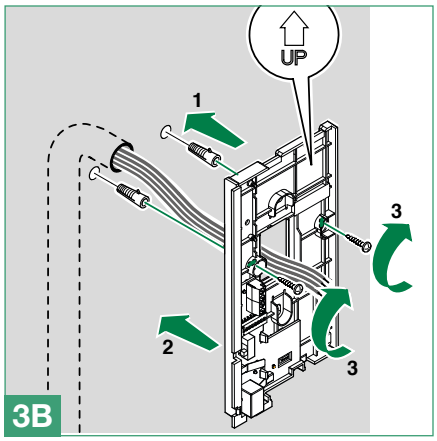

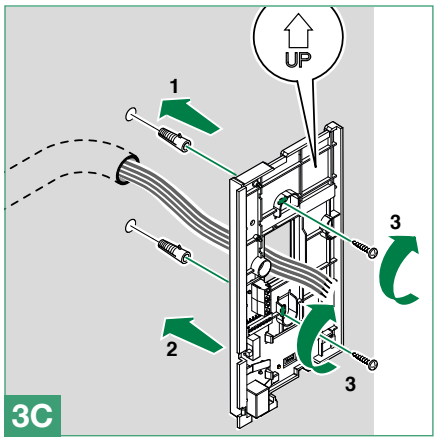

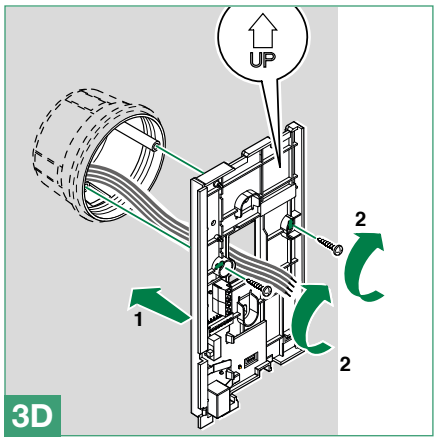

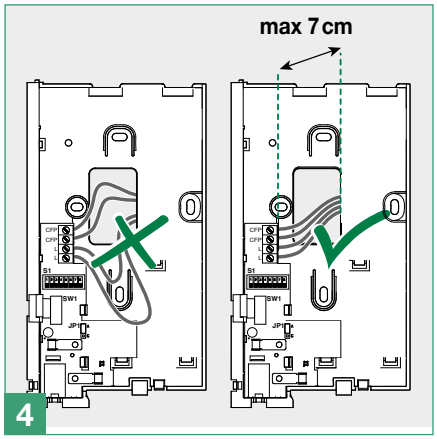

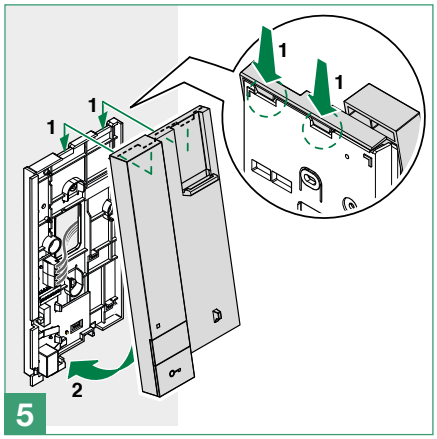

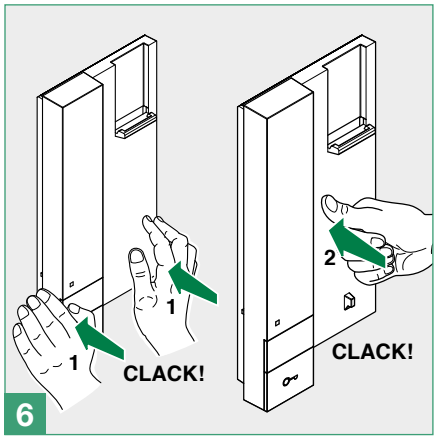

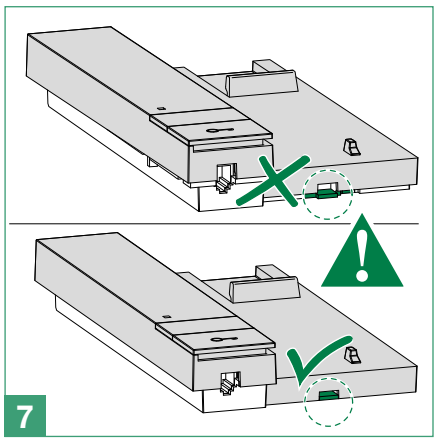

Connections

Connection to the video entry system riser

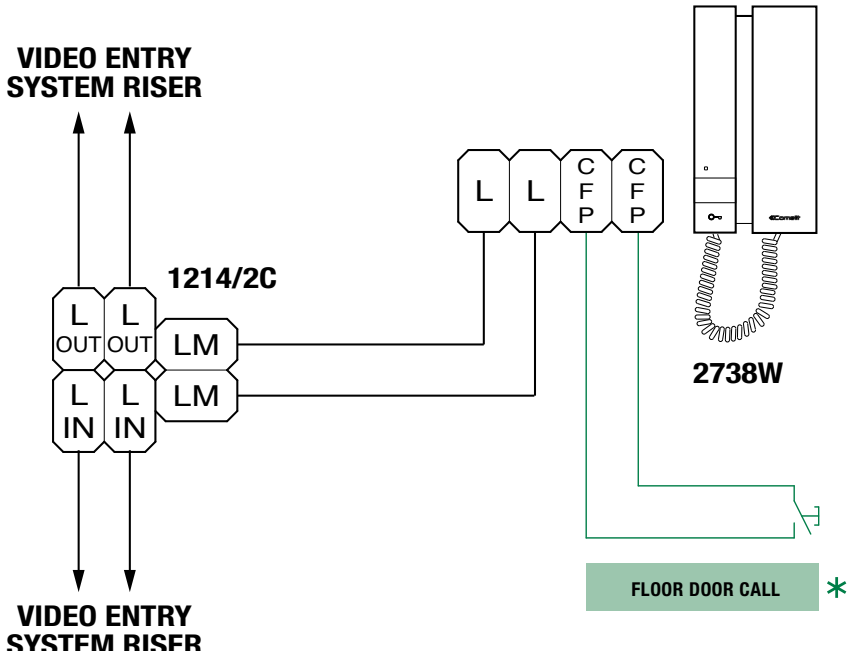

* **20 m MAX** - Use shielded cable for the connection and do not route the cables in the vicinity of heavy inductive loads or power supply cables (230V/400V).
Where multiple door-entry phones or monitor backplates have the same user code, connect the CFP button on oneonly; all the devices will ring simultaneously..

Branched connection to the video entry system riser from the internal video unit

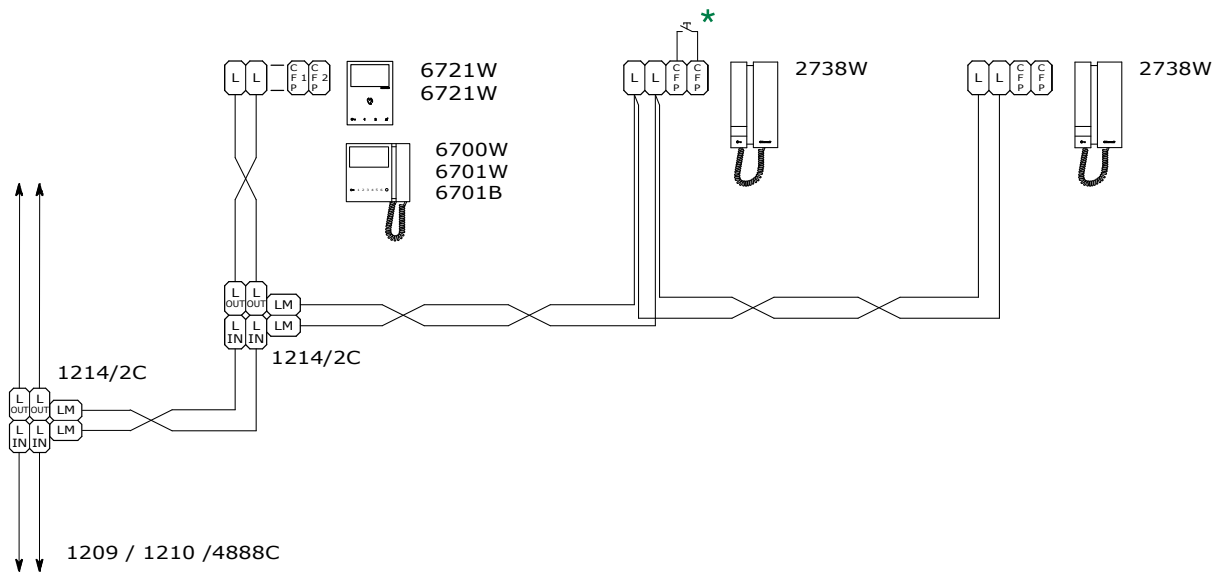

* **20 m MAX** - Use shielded cable for the connection and do not route the cables in the vicinity of heavy inductive loads or power supply cables (230V/400V).
Where multiple door-entry phones or monitor backplates have the same user code, connect the CFP button on one only; all the devices will ring simultaneously..

Programming

- Each door-entry phone in the system is identified by means of its own code. This code must be set using the Dip switch on the phone card.
- The user code must be set according to the corresponding information provided in the programming table.
- Coding can take place at any time, even without a power supply.

System performance and layouts

For further information of system performance and to view installation layouts, click on the system type that best meets your requirements:

- **Audio/video kit** for the creation of audio-video systems for *individual residences*.
- **Building Kit audio/video system** for the creation of audio-video systems for *small apartment blocks.*
- **SBTOP audio/video system** for the creation of audio-video systems for *residential complexes.*
- **Audio kit** for the creation of audio systems for *individual residences*.
- **SB2 audio system** for the creation of audio systems for *residential complexes.*

Table of contents

Warning

Description 341

Technical characteristics 342

Installation 343

Connections 344

Connection to the door entry riser and the floor door call buttonta344

Programming 344

System performance and layouts 344

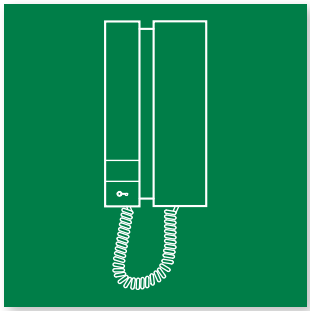

Door-entry phone Art. 2708W

Description

*Art. **2708W** is a door-entry phone complete with 1 key button, 1 P1 button and a 3-position ringtone / Privacy service selector, which can be used in SB1 systems.*

Dimensions 105×190×28 mm.

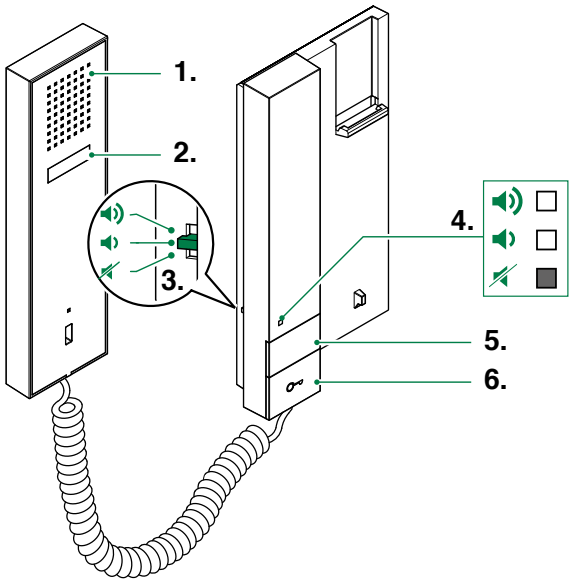

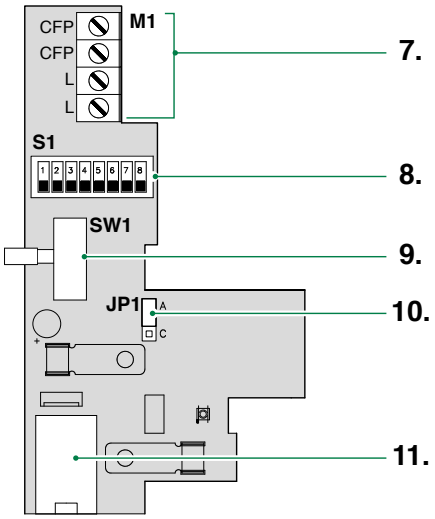

1. Loudspeaker.

2. Audio hook.

Do not press and hold the audio hook while the handset is lifted.

3. 3-position ringtone/Privacy service selector:

High position: Maximum ringtone volume.

Middle position: Medium ringtone volume.

Low position: Privacy function activation (privacy service means exclusion of the call ringtone from the external unit and switchboard).

4. Red indicator - Privacy enabled.

5. P1 button for switchboard call / generic actuator.

6. Key button.

7. Terminal block **M1**:
CFP CFP floor door call input
LL bus line connection

8. Dip switch for setting user code (See **"addressing table"**).

9. 3-position selector for Call tone/Privacy service.

10. JP1 jumper for selecting the Generic actuator/ Switchboard call function of button P1.



A Generic Actuator



C Switchboard

11. Handset connector.

Technical characteristics

MAIN FEATURES	
Audio system	Yes
Wall-mounted	Yes
Desk base-mounted	Yes
Product colour	White
Total buttons	2
FUNCTIONS	
Actuator control function	Yes
Switchboard call function	Yes
Privacy function	Yes
Floor door call function	Yes
Electronic bell	Yes
Key button function	Yes
SETTINGS	
Loudspeaker volume control	Yes
Ringtone volume control	Yes
GENERAL DATA	
Product height (mm)	190
Product width (mm)	103
Product depth (mm)	30
COMPATIBILITY	
Simplebus 1 audio system	Yes
TECHNICAL CHARACTERISTICS	
Power supply voltage	20
Absorption in standby (mA)	0.7
In called absorption (mA)	23
In communication absorption (mA)	22
Operating temperature (°C)	-5 ÷ 40
Product weight (g)	260
Clamps	L,L,CFP,CFP

Installation

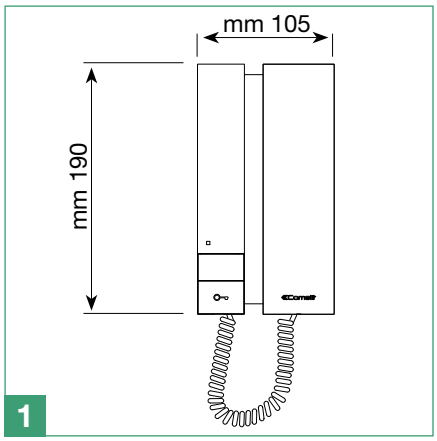

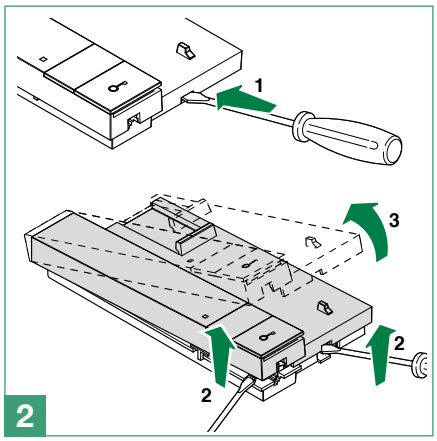

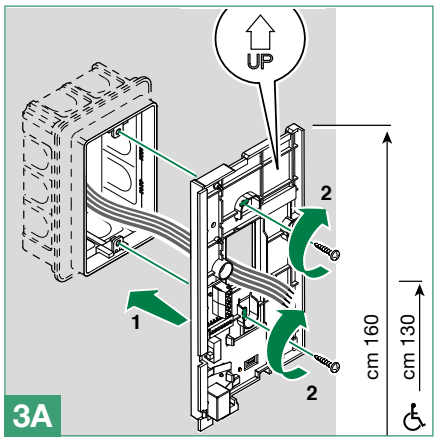

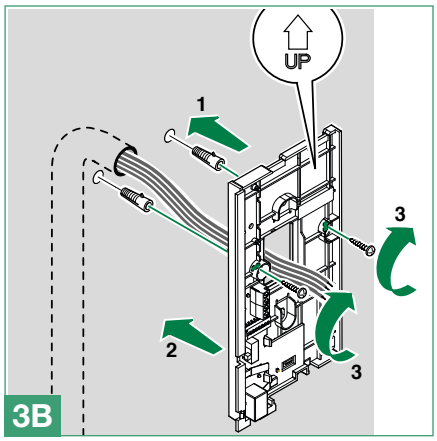

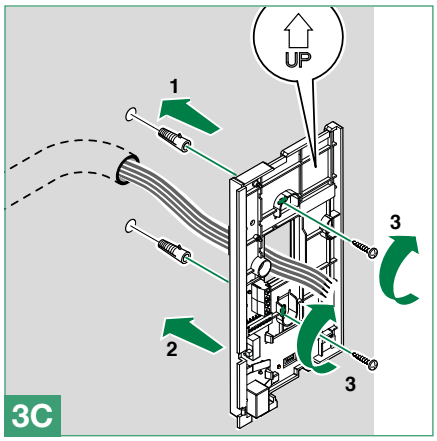

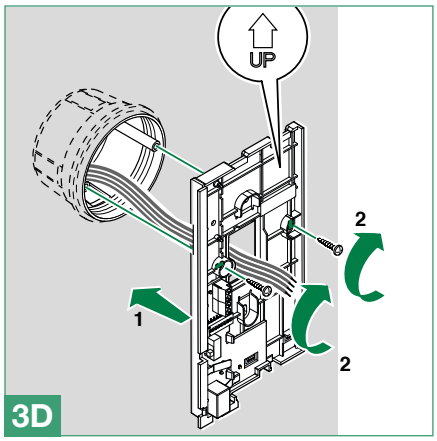

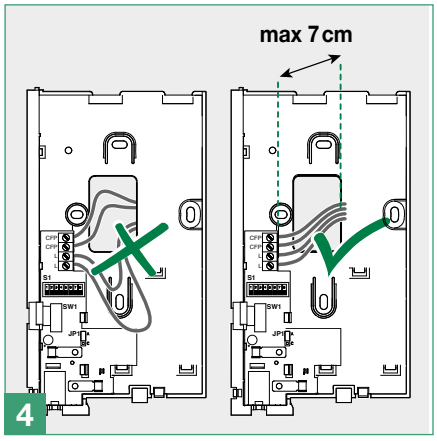

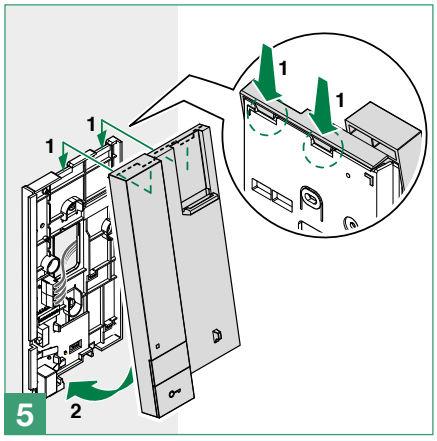

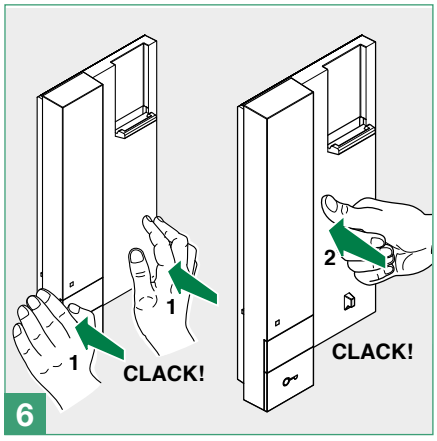

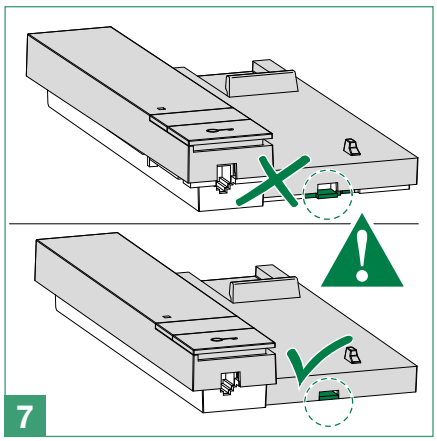

Connections

Connection to the door entry riser and the floor door call buttonta

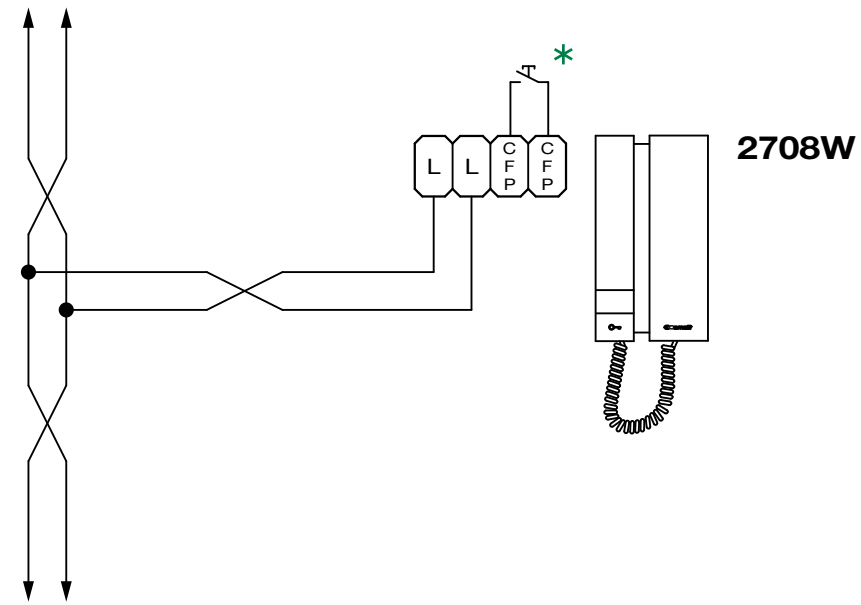

Where multiple door-entry phones or monitor backplates have the same user code, connect the CFP button on one only; all the devices will ring simultaneously.

* **20 m MAX** - Use shielded cable for the connection and do not route the cables in the vicinity of heavy inductive loads or power supply cables (230V/400V).

Programming

- Each door-entry phone in the system is identified by means of its own code. This code must be set using the Dip switch on the phone card.
- The user code must be set according to the corresponding information provided in the programming table (see: **“addressing table”**).
- Coding can take place at any time, even without a power supply.

System performance and layouts

For further information of system performance and to view installation layouts, click on the system type that best meets your requirements:

- **SB1 audio system** for the creation of audio systems for *residential complexes.*

Table of contents

Warning

Description **347**
- **Art. 6750W** **347**
- **Art. 6751W** **348**

Technical characteristics **349**

Wall-mounted **350**

Connections **352**
- **Connection to the video entry riser and the floor door call button** **352**
- **Branched connection to the video entry system riser from the internal video unit** **352**
- **Connection to the door entry riser and the floor door call button** **352**

Touch-sensitive buttons **353**
- **Description** **353**
- **Indicator LED** **353**
- **Answering an incoming call** **353**
- **Activation / deactivation of Automatic answer mode** **353**

Configuration **354**
- **Touch-sensitive buttons** **354**
  - Legend 354
- **Basic configuration** **354**
- **Advanced configuration** **355**
  - Warning 355
  - Intercom calls: introduction 355
  - Selective intercom address: programming/cancellation 355
  - Intercom call: button programming 356
  - Intercom call: direct programming 357
  - Generic actuator, Addressable actuator: button programming 358
  - Other functions 359
- **Programming range** **360**
- **Changing the ringtone** **360**
- **Programming reset** **361**

System performance and layouts **361**

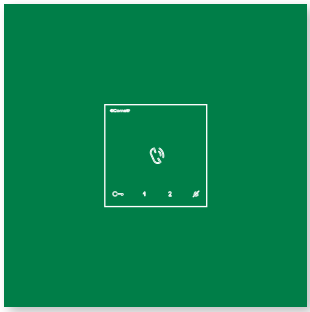

Handsfree door entry phone Mini 6750W, Mini 6751W

Description

Art. 6750W

- *Mini series handsfree door entry phone with full-duplex audio and integrated magnetic induction audio amplification system. With 5 touch sensitive buttons for audio key, lock release, actuator, switchboard call and Privacy functions, and door status indicator LED. Floor door call management as standard. Equipped with branch terminal art. 1214/2C.*
- *For use in* **SimpleBusTop audio/video systems** *with mixer art. 4888C,* **Building Kit systems** *with power supply unit art. 1210 or* ***Audio/Video Kits*** *with power supply unit art. 1209.*

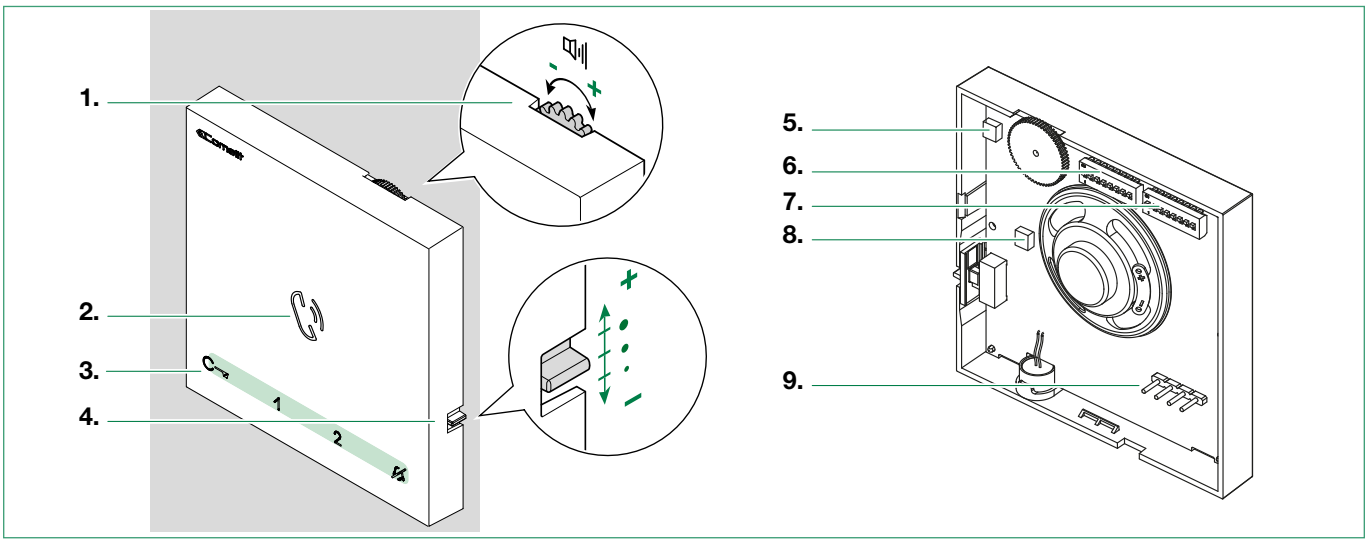

1. Loudspeaker volume control

▶ *turn clockwise to increase the value*

2. Speaker and audio activation button

3. Touch-sensitive buttons

4. Call volume adjustment (high - medium - low)

5. Trimmer - Factory setting DO NOT CHANGE!

6. S1 Ⓐ Microswitches for setting the user code (see **“addressing table”**)

7. S2Ⓟ Microswitches for programming keys and functions

DIP 1-2-3-4 for button function programming

DIP 5-6 access to programming

DIP 7-8 not utilised

8. Trimmer - Factory setting DO NOT CHANGE!

9. Pin for securing terminal block

Terminal block for system connection

LL Bus line connection terminals

CFP1 CFP2 Floor door call input

Art. 6751W

- *Mini series door entry phone with full-duplex audio. With 5 touch sensitive buttons for audio key, lock release, actuator, switchboard call and Privacy functions, and door status indicator LED. Floor door call management as standard.*
- *For use in* **SimpleBus2 audio systems** *with power supply unit art. 1210.*

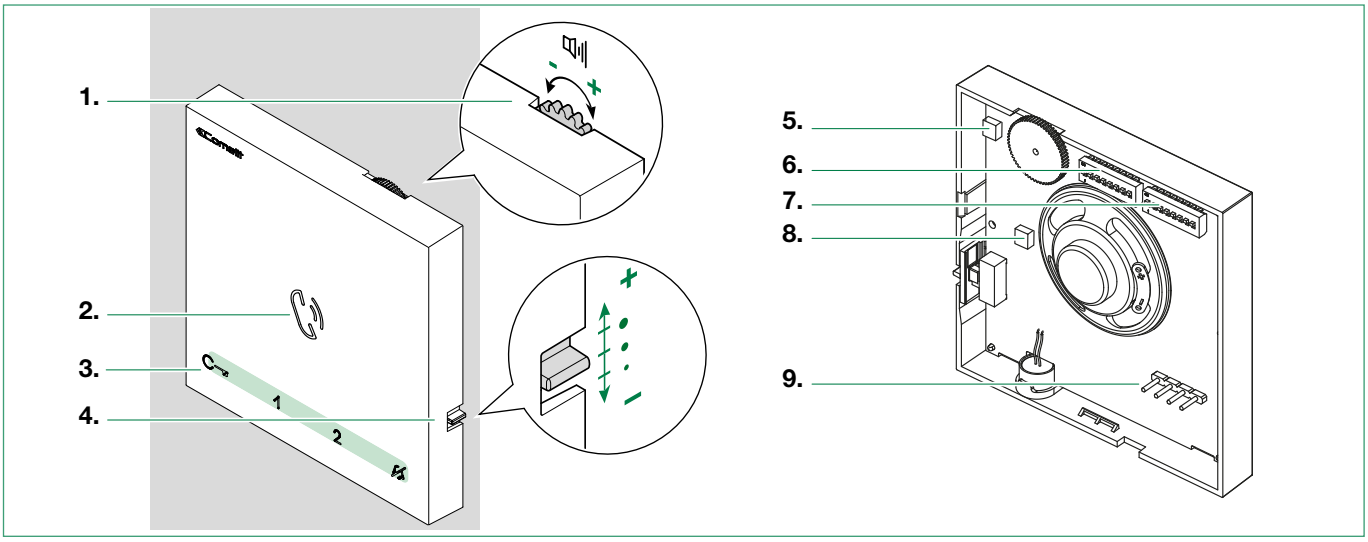

1. Loudspeaker volume control
- ▶ *turn clockwise to increase the value*

2. Speaker and audio activation button

3. Touch-sensitive buttons

4. Call volume adjustment (high - medium - low)

5. Trimmer - Factory setting DO NOT CHANGE!

6. S1 ⓐ Microswitches for setting the user code (see **“addressing table”**)

7. S2ⓟ Microswitches for programming keys and functions

DIP 1-2-3-4 for button function programming

DIP 5-6 access to programming

DIP 7-8 not utilised

8. Trimmer - Factory setting DO NOT CHANGE!

9. Pin for securing terminal block

Terminal block for system connection

LL Bus line connection terminals

CFP1 CFP2 Floor door call input

Technical characteristics

	Art. 6750W	Art. 6751W
MAIN SPECIFICATIONS		
SimpleBus 2 audio system	Yes	Yes
SimpleBus Top audio/video system	Yes	NO
Building Kit audio/video system	Yes	NO
Audio/Video kit	Yes	NO
Induction Loop system	Yes	NO
Branch terminal provided	Yes	NO
Wall-mounted	Yes	Yes
Full-duplex audio	Yes	Yes
Product colour	White	White
Sensitive Touch technology	Yes	Yes
Total buttons	5	5
Additional buttons	NO	NO
LED signaling (No.)	3	3
FUNCTIONS		
Actuator control functio	Yes	Yes
Switchboard call	Yes	Yes
Panic call	Yes	Yes
Intercom function	Yes	Yes
Selective intercom call	Yes	Yes
Call to multiple addresses	Yes	Yes
Privacy mode	Yes	Yes
Doctor	Yes	Yes
Floor door call function	Yes	Yes
Electronic bell	Yes	Yes
Customisable ringtone	Yes	Yes
HARDWARE SPECIFICATIONS		
Removable terminals	Yes	Yes
SETTINGS		
Loudspeaker volume control	Yes	Yes
Microphone volume control	NO	NO
Ringtone volume control	Yes	Yes
GENERAL INFO		
Product height (mm)	105	105
Product width (mm)	105	105
Product depth (mm)	20	20
TECHNICAL CHARACTERISTICS		
Power supply voltage	22-35 Vdc	22-35 Vdc
Absorption in standby (mA)	2	2
Maximum current absorption (mA)	130	130
IP Rating	30	30
Operating temperature (°C)	-5 +40	-5 +40
Relative humidity for operation (%)	25-75	25-75
Product weight (g)	0,15	0,15
Terminals	LL CFP1 CFP2	LL CFP1 CFP2

Wall-mounted

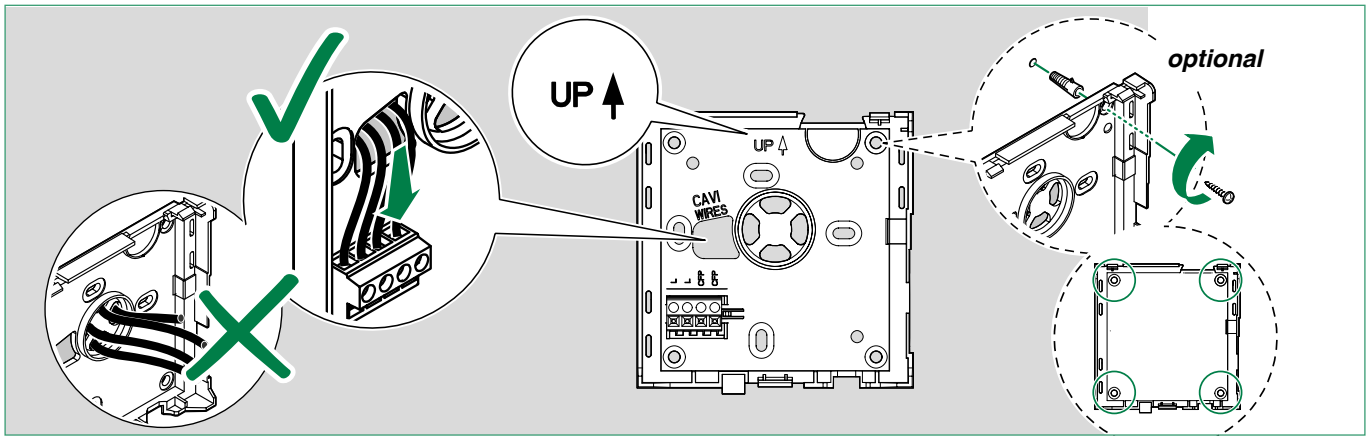

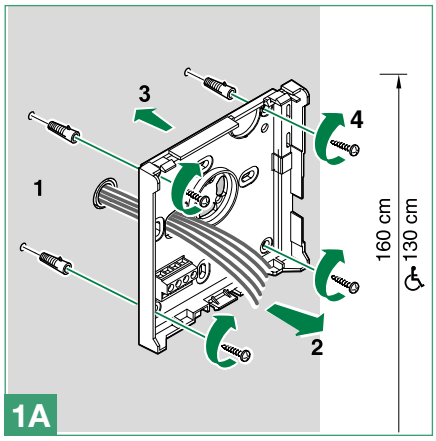

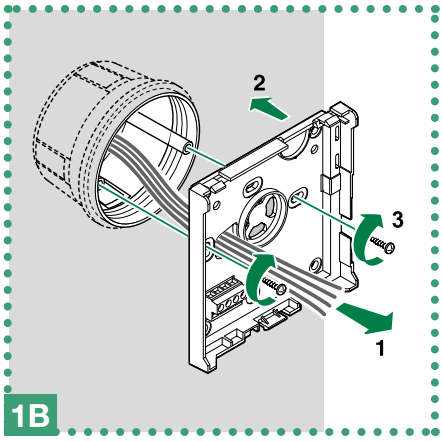

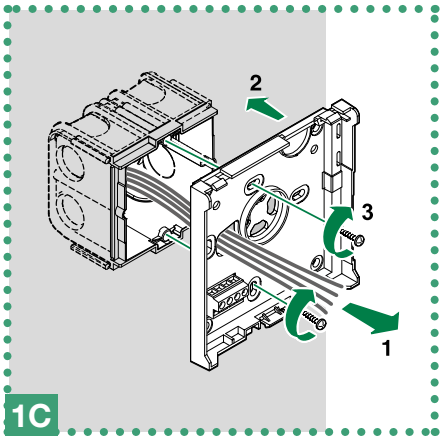

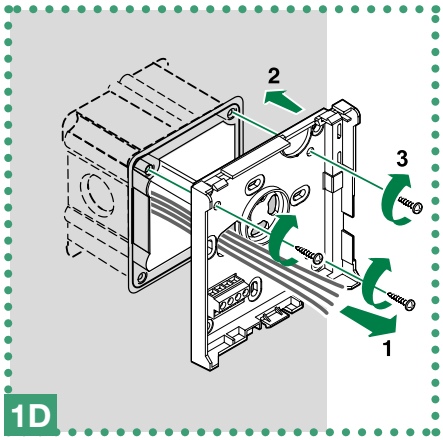

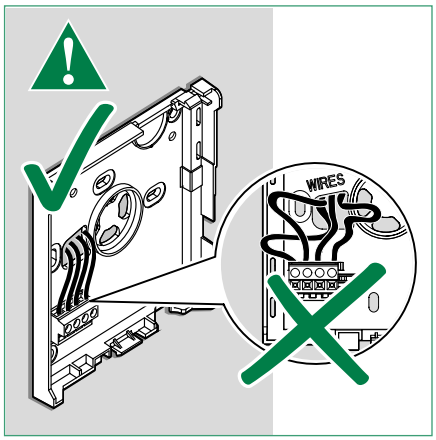

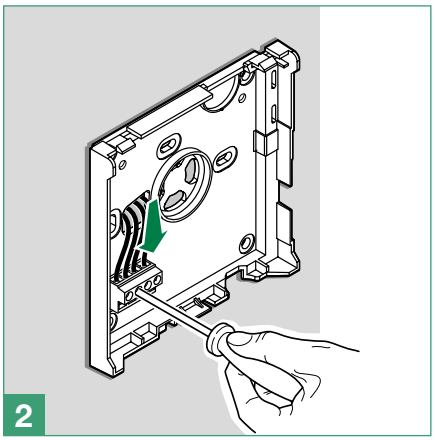

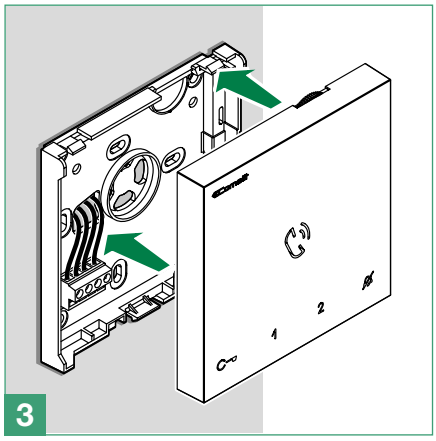

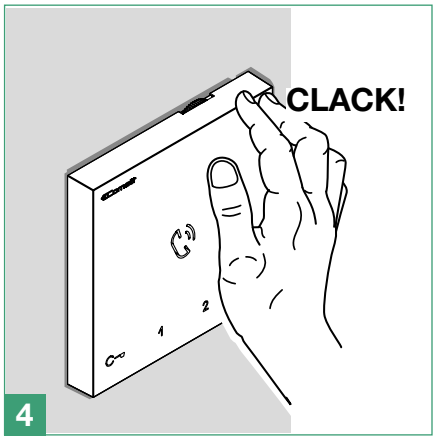

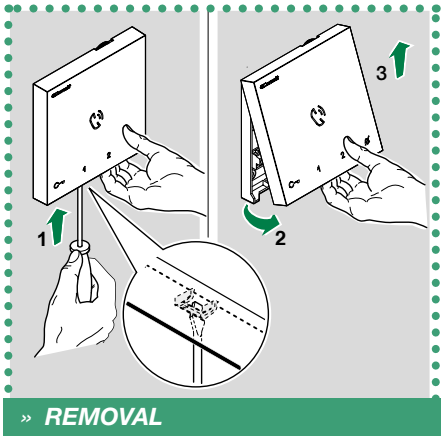

Terminal removal

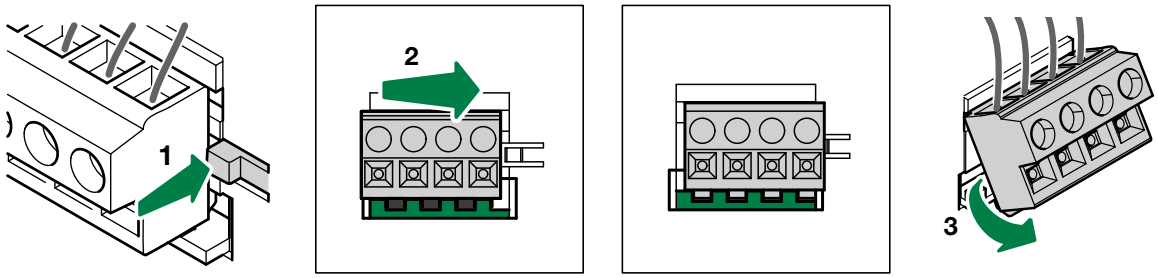

Terminal installation

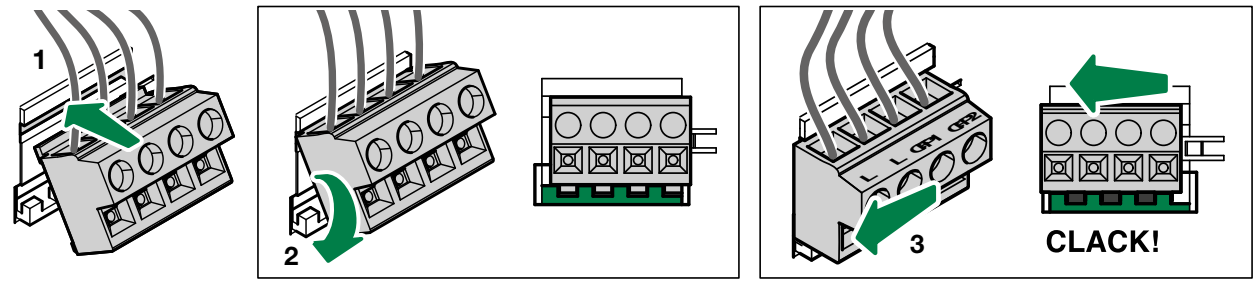

Connections

Connection to the video entry riser and the floor door call button

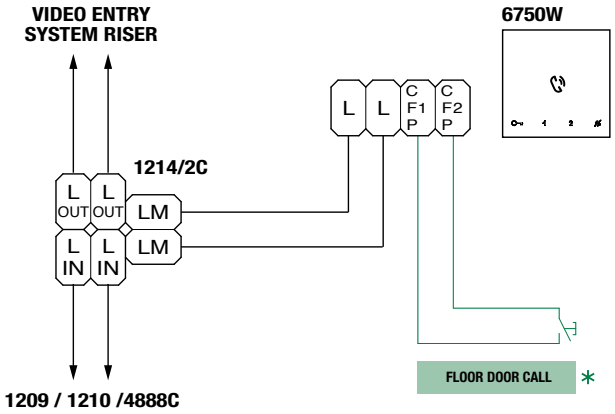

Branched connection to the video entry system riser from the internal video unit

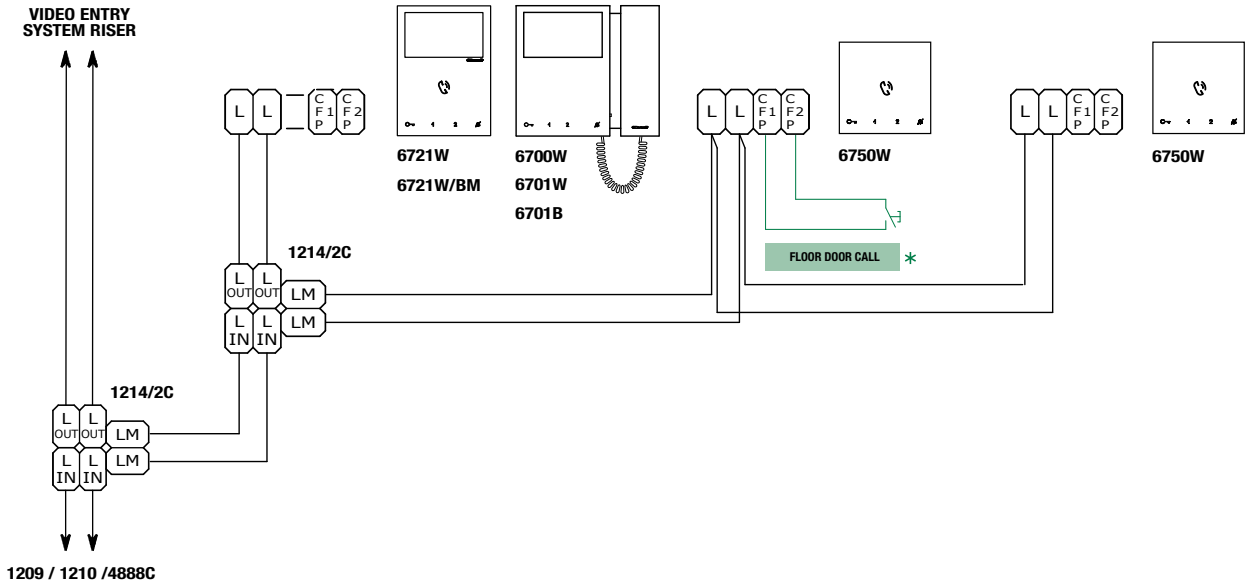

Connection to the door entry riser and the floor door call button

Audio only systems

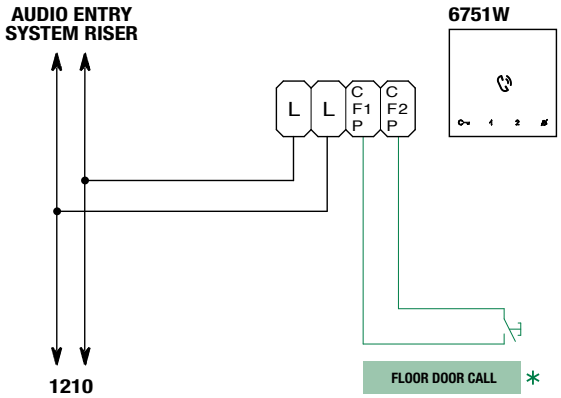

*** 20 m MAX** - Use shielded cable for the connection and do not route the cables in the vicinity of heavy inductive loads or power supply cables (230V/400V).

Where multiple door-entry phones or monitor backplates have the same user code, connect the CFP button on one only; all the devices will ring simultaneously.

Touch-sensitive buttons

Description

	Audio activation	[*programmable*]
C	Lock release	[*programmable*]
1	Actuator function	[*programmable*]
2	Secondary switchboard	[*programmable*]
	Privacy Mode	[*not programmable*]

▶ Press the desired button once to activate the associated function.

Wait for approximately 1 sec. before pressing the same button again. Pressing the same button several times in quick succession will cancel the command.

Indicator LED

Audio LED

steady on (in call): communication in progress
steady on (in stand-by): *Automatic answer* mode activated
continuous flashing: incoming call

C Lock release LED

slow flashing: door open
1 flash after pressing button: door open confirmed
continuous flashing: incoming call

Privacy LED (red)

steady on: Privacy mode activated
3 flashes (every 5 sec): Doctor function activated
continuous flashing: device in programming mode
4 flashes: system engaged

Answering an incoming call

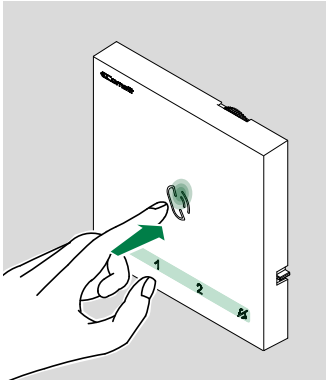

Press the touch-sensitive audio activation button to answer the incoming call.

Activation / deactivation of Automatic answer mode

▶ Long press (5 sec) the button
» ACTIVATION: + LED STEADY ON
» DEACTIVATION: + LED OFF

Configuration

Touch-sensitive buttons

	Legend
	Audio
	Lock-release
	Privacy mode
ACT	**Actuator**
CCP	**Call to main switchboard**
CCS	**Call to secondary switchboard**
K	**Caretaker door-entry phone call**
D	**Doctor (Automatic door opening on receipt of call)**
PAN	**Panic**
INT	**General or selective programmable intercom.** *Default: single-family call*
INTb	**General or selective programmable intercom.** *Default: two-family call*
NULL	**No function**
PROG.	**Programmed functions, see "Advanced configuration".** **With these DIP-switch settings, the buttons control the programmed functions;** **The NON-programmed buttons control the functions on line 0000 *(Default).**

Basic configuration

S2			
DIP 1	**DIP 2**	**DIP 3**	**DIP 4**
0	0	0	0
1	0	0	0
0	1	0	0
1	1	0	0
0	0	1	0
1	0	1	0
0	1	1	0
1	1	1	0
0	0	0	1
1	0	0	1
0	1	0	1
1	1	0	1
0	0	1	1
1	0	1	1
0	1	1	1
1	1	1	1

BUTTON PROGRAMMING				
		1	2	
		ACT	**CCS**	
		ACT	**INT**	
		INT	**D**	
		ACT	**CCP**	
	ACT	**ACT**	**ACT**	
		ACT	**K**	
		ACT	**D**	
		INTb	**INT**	
		CCS	**PAN**	
		K	**CCS**	
		CCP	**K**	
		PAN	**CCP**	
		INTb	**PAN**	
		INT	**INT**	
NULL				
PROG				

* *Default* 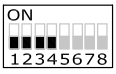

Advanced configuration

Warning

If the default settings (Table "Basic configuration") do not reflect requirements, the buttons can be programmed differently by carrying out the steps below.

After programming, set S2 DIP switches 1-2-3-4 to the combination 1111. With these DIP-switch settings, the buttons control the programmed functions.

The NON-programmed buttons control the basic configuration functions 0000. To restore the user code setting on S1, see "addressing table"

Intercom calls: introduction

General and selective intercoms CANNOT be used together on the same riser.

General intercom: call from one *internal unit* to one or more *internal units* identified by the same call address *as used by the external unit*.

Selective intercom: call from an *internal unit* to one or more *internal units* identified by a dedicated call address *(see "TABLE B")* which is different from the call addressed used by the external unit.

Selective intercom address: programming/cancellation

Take note of the S2, S1 settings and restore on completion of programming

1)	2)	3)	
Programming; set code, "TABLE B" **S1** 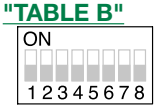	**S2 DIP** 1 2 3 4 5 6 0 0 0 1 1 1 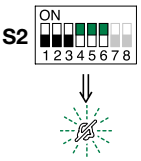	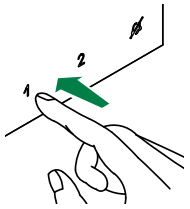	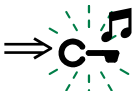
Cancellation **DIP ON** **S1** 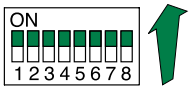	**S2 DIP** 1 2 3 4 5 6 1 1 1 1 1 1 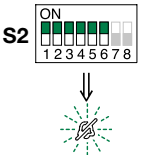	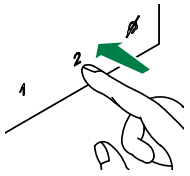	

Selective intercom addresses

You must set the intercom address on all the riser's internal units.
You can assign the same intercom address to a maximum of 3 internal units.
For group calls, select the desired intercom codes simultaneously (max. 3).

TABLE B

Codice	DIP switch ON	S1	Codice	DIP switch ON	S1
1	1		5	5	
2	2		6	6	
3	3		7	7	
4	4		8	8	

Intercom call: button programming

1. To enter programming mode, set S2 **DIP-switch 6** to combination 1

» *the Privacy LED flashes*

S2 DIP						
1	2	3	4	5	6	**S2**
0	0	0	0	0	1	

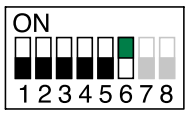

⇒

2. Refer to the table **Basic configuration** and select a combination in which the intercom function is listed for the buttons you wish to program.

Example

S2				▶	BUTTON PROGRAMMING	
DIP 1	**DIP 2**	**DIP 3**	**DIP 4**		1	2
1	0	1	1		**INT**	**INT**

General intercom

Example programming of button **1** *single-family general intercom,* and button **2** *general intercom to address 9*, of a device with user code **5**.
(Button = INT) Set S2 DIP switches 1-2-3-4 to the combination ***1 0 1 1***, set S1 with address 5 in accordance with the **"addressing table"**. Proceed with programming from point 3.
(Button 2 = INT) Set S2 DIP switches 1-2-3-4 to the combination ***1 0 1 1,*** set S1 with *address 9* in accordance with **"addressing table".** Proceed with programming from point 3.

Selective intercom

Example programming of button **1** *selective intercom* to address 2 and button **2** *selective intercom* to address 3, of a device with user code 1 and intercom address 1.
(Button 1 = INT) Set S2 DIP switches 1-2-3-4 to the combination ***1 0 1 1***, set S1 with address 2 in accordance with **TABLE B .**Proceed with programming from point 3.
(Button 2 = INT) Set S2 DIP switches 1-2-3-4 to the combination***1 0 1 1***, set S1 with *address 3* in accordance with **TABLE B.** Proceed with programming from point 3.

3. Press and release the button to be associated with the function

» *Correct procedure indication*: the *Lock release* LED flashes for a few seconds and a confirmation tone sounds

» *Procedure error indication:* the *Audio* LED flashes for few seconds and an error tone sounds

4. To exit programming mode, set S2 **DIP switch 6** to the combination 0

» *the Privacy LED switches off*

5. After programming, set S2 DIP switches 1-2-3-4 to the combination 1111. Restore the user code setting on S1 (see "addressing table".

Intercom call: direct programming

Allows direct programming of intercom call via the internal units.

✓ Requires 2 operators

Step 1: enter programming mode

Operator 1 and Operator 2 carry out the following procedures on 2 internal units:

1. Set S2 DIP switches 1-2-3-4 to the combination 1111
2. Press the Audio button
3. Press and hold the Privacy and Lock release buttons for 3 sec.
   - » The internal unit emits 1 tone.
   - » The Privacy LED flashes
   - » The internal unit enters audio mode.
   - » At this point the 2 operators are in communication with each other.

Step 2: intercom call programming

Operator 1:

▶ Press the button you want to program to call operator 2 (e.g. 2).

» The internal unit manned by operator 1 emits a confirmation tone.

Operator 2:

▶ Press the button you want to program to call operator 1 (e.g. 1).

» The internal unit manned by operator 2 emits a confirmation tone.

Operator 1/Operator 2:

▶ Press the Audio button

» The internal unit emits 1 tone.

» Programming of the 2 internal units is now complete.

To program another internal unit, go to STEP 3.

Step 3: programming other internal units

Operator 1/Operator 2:

1. Once the new station has been reached, carry out step 1 to begin communication.
2. Repeat step 2.

N.B. If a call is received during programming, it must be answered and the programming procedure resumed afterwards.

Generic actuator, Addressable actuator: button programming

Take note of the DIP-switch settings.

1. To enter programming mode, set S2 **DIP switch 6** to combination 1

» *the Privacy LED flashes*

S2 DIP						
1	2	3	4	5	6	**S2**
0	0	0	0	0	1	

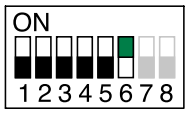

⇒

2. Refer to the table **"Basic configuration"** and select a combination in which the actuator function (ACT) is listed for the buttons you wish to program.

Example

S2			
DIP 1	**DIP 2**	**DIP 3**	**DIP 4**
0	0	1	0

▶

BUTTON PROGRAMMING		
C⊸	1	2
ACT	**ACT**	**ACT**

Example programming of button **1** *generic actuator,* and button **2** *addressable actuator* to code 125
(Button 1 = ACT) Set S2 DIP switches 1-2-3-4 to the combination ***0 0 1 0,*** Set S1 DIP switches to the combination 11111111.
(Button 2 = ACT) Set S2 DIP switches 1-2-3-4 to the combination ***0 0 1 0***, set S1 with address 125 in accordance with **"addressing table".**

3. Press and release the button to be associated with the function

» *Correct procedure indication*: the *Lock release* LED flashes for a few seconds and a confirmation tone sounds

» *Procedure error indication:* the *Audio* LED flashes for few seconds and an error tone sounds

4. To exit programming mode, set S2 DIP switch 6 to the combination 0

» *the Privacy LED switches off*

5. After programming, set S2 DIP switches 1-2-3-4 to the combination 1111. Restore the user code setting on S1, see "addressing table".

Other functions

1. To enter programming mode, set S2 **DIP switch 6** to combination 1

» *the Privacy LED flashes*

S2 DIP						
1	2	3	4	5	6	S2
0	0	0	0	0	1	

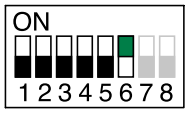

2. Refer to the table **"Basic configuration"** and select a combination in which the desired/necessary functions are listed for the buttons you wish to program.

S2				BUTTON PROGRAMMING			
DIP 1	DIP 2	DIP 3	DIP 4			1	2
0	0	0	0				CCS
0	1	0	0				D
1	1	0	0				CCP
1	0	1	0				K
0	1	1	0				D
0	0	0	1			CCS	PAN
1	0	0	1			K	CCS
0	1	0	1			CCP	K
1	1	0	1			PAN	CCP
0	0	1	1				PAN
0	1	1	1	NULL			
1	1	1	1	PROG			

Example programming of button **1** *Call to secondary switchboard* and button **2** *Panic*.
(Button 1 = CCS, Button 2 = PAN) Set S2 DIP switches 1-2-3-4 to the combination ***0 0 0 1***.

3. Press and release the buttons to which you wish to assign the functions

» *Correct procedure indication*: the *Lock release* LED flashes for a few seconds and a confirmation tone sounds

» *Procedure error indication:* the *Audio* LED flashes for few seconds and an error tone sounds

4. To exit programming mode, set S2 DIP switch 6 to the combination 0

» *the Privacy LED switches off*

5. After programming, set S2 DIP switches 1-2-3-4 to the combination 1111.

Programming range

Take note of the S2, S1 settings and restore on completion of programming

Carry out steps 1 to 4

	1)	2)	3)		4)
Range minimum address	S1 ON 1 2 3 4 5 6 7 8 **set code,** **"addressing table"**	S2 DIP 1 2 3 4 5 6 / 0 0 0 0 1 0 S2 ON 1 2 3 4 5 6 7 8	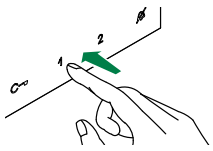		S2 ON 1 2 3 4 5 6 7 8
Range maximum address			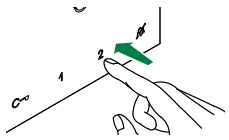		
Enable range			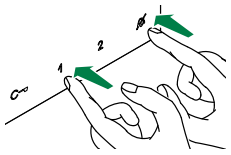		
Disable range			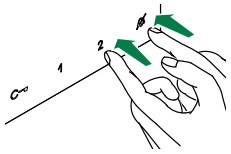		
Deleting the range	DIP ON S1 ON 1 2 3 4 5 6 7 8	S2 DIP 1 2 3 4 5 6 / 1 1 1 1 1 0 S2 ON 1 2 3 4 5 6 7 8	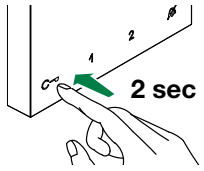		

Changing the ringtone

1. Press and hold C for 6 sec.
   - » a confirmation tone will sound
   - » the Privacy LED will flash to indicate "programming" mode.

✓ the procedure can only take place while the system is in standby; otherwise the Privacy LED will flash 4 times to inform the user that the system is engaged.

2. Press and release C

   Once (1 confirmation tone is emitted) to change the ringtone for calls from the external unit.

   Twice (2 confirmation tones emitted) to change the switchboard call tone

   3 times (3 confirmation tones are emitted) to change the ringtone for intercom calls made from the internal unit.

   4 times (4 confirmation tones are emitted) to change the floor door call ringtone.

   Any further presses of button C will repeat the sequence described above.

3. Press and release 1 to scroll through the various available ringtones in sequence.
4. Press 2 to confirm selection of the last ringtone heard and to exit change monitor ringtone mode.
   - » one confirmation tone is emitted
   - » the Privacy LED switches off

Repeat steps 1 to 4 to change the other ringtones.

Programming reset

Factory settings

- Button functions for the S2 DIP switches 1-2-3-4 combination
- Intercom address absent
- Range function and min./max. addresses absent
- Ringtone reset

Take note of the S2, S1 settings and restore on completion of programming

1)	2)	3)
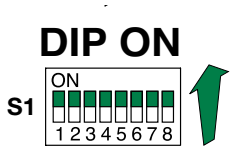	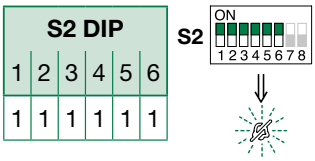	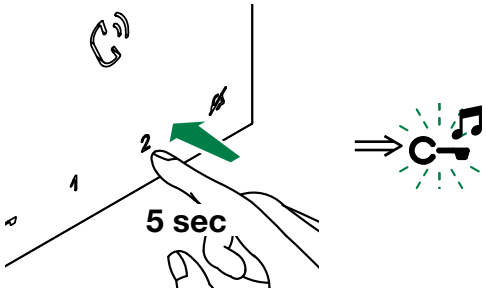

System performance and layouts

For further information of system performance and to view installation layouts, click on the system type that best meets your requirements:

- **Audio/video kit** for the creation of audio-video systems for *individual residences*.
- **Building Kit audio/video system** for the creation of audio-video systems for *small apartment blocks.*
- **SBTOP audio/video system** for the creation of audio-video systems for *residential complexes.*
- **Audio kit** for the creation of audio systems for *individual residences*.
- **SB2 audio system** for the creation of audio systems for *residential complexes.*

Table of contents

Warning

Description 364

Technical specifications 368

Installation 369

Insertion of name labels 370

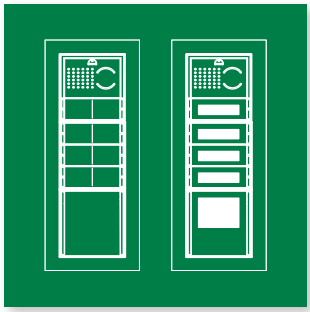

Ikall and Ikall Metal modular entrance panel

Description

*The **Ikall series** is a modular entrance panel available in both digital and analogue versions. The various modules available can be used to create an entrance panel to suit the specific needs of the system.*
*It is also available in an **Ikall metal** version.*

Example flush-mount installation of 3 modules		1 Module	2 Modules	3 Modules	4 Modules
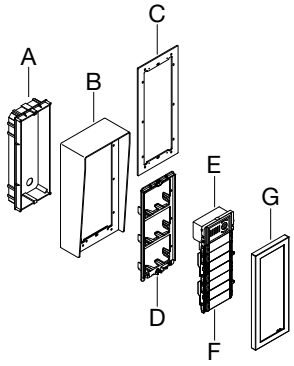 A = Flush-mount box B = Rain shield* C = Flush frame for wall mounting* D = Module holder E = Audio/video modules F = Button modules G = Finishing frame	Flush-mount box	 3110/1	 3110/2	 3110/3	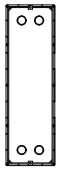 3110/4
	Module holder with finishing frame	 3311/1 (W/A/S/AL)	 3311/2 (W/A/S/AL)	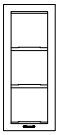 3311/3 (W/A/S/AL)	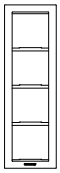 3311/4 (W/A/S/AL)
	Rain shield*	 31121	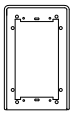 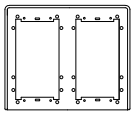 31122 31124	 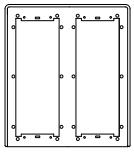 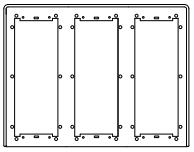 31123 31126 31129	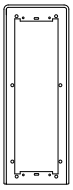 31124L
	Flush frame for wall mounting*	 31141	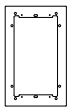 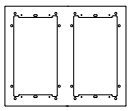 31142 31144	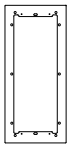 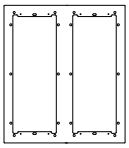 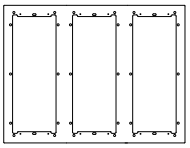 31143 31146 31149	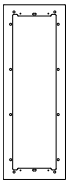 31144L

Example flush-mount installation of 3 modules		1 Module	2 Modules	3 Modules	4 Modules
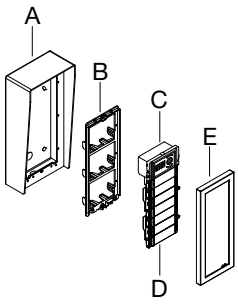 A = Surface-mount housing B = Module holder C = Audio/video modules D = Button modules E = Finishing frame	Surface-mount housing	 31161	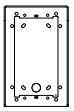 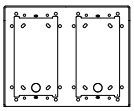 31162 31164	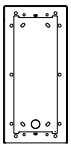 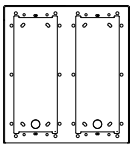 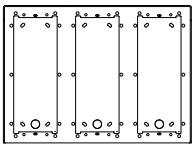 31163 31166 31169	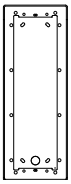 31164L
	Module holder with finishing frame	 3311/1 (W/A/S/AL)	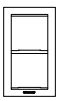 3311/2 (W/A/S/AL)	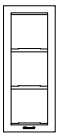 3311/3 (W/A/S/AL)	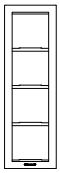 3311/4 (W/A/S/AL)

* Optional

Ikall Metal modules			
Audio	**Video**	**Buttons**	**Various modules**
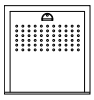 33400M	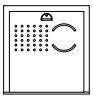 33410M	 33433M	 3334M
 33401M	 33411M	 33434M	 3336M
 33402M	 33412M	 33436M	 3339M
			 3348BM
			 3349M
			 3360BM
Ikall modules			
 33400	 33410	 33433	 3334
 33401	 33411	 33434	 3336
 33401A	 33411A	 33436	 3348B
 33402	 33412		 3349
 33402A	 33412A		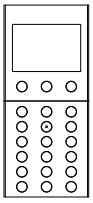 3360B

IKALL / IKALL METAL COMPOSITION TABLE

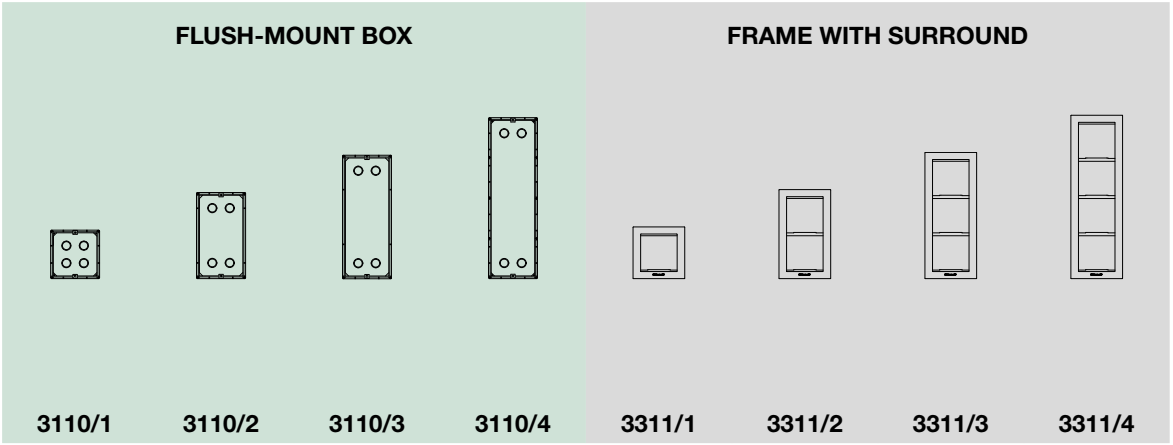

Users								
1	1				1			
2	1				1			
3		1				1		
4		1				1		
5-6		1				1		
7-8		1				1		
9-10			1				1	
11-12			1				1	
13-14			1				1	
15-16				1				1
17-18				1				1
19-20				1				1
21-22			2				2	
23-24			2				2	
25-26			2				2	
27-28			2				2	
29-30			2				2	
31-32			2				2	
33-34				2				2
35-36				2				2
37-38				2				2
39-40				2				2
41-42				2				2
43-44				2				2
45-46			3				3	
47-48			3				3	
49-50			3				3	

AUDIO MODULES



33400



33401



33402

AUDIO/VIDEO MODULES



33410



33411



33412

BUTTON MODULES



33433



33434



33436

VARIOUS MODULES



3336

	1					
		1				
1			1			
1				1		
1					1	
		1			1	
1				1	1	
1					2	
		1			2	
1				1	2	
1					3	
		1			3	
1				1	3	1
1					4	1
		1			4	1
1				1	4	
1					5	
		1			5	
1				1	5	1
1					6	1
		1			6	1
1				1	6	
1					7	
		1			7	
1				1	7	
1					8	
		1			8	

Technical specifications

MAIN SPECIFICATIONS	IKALL	IKALL/METAL
Simplebus Top system	Yes	Yes
Compatible with the Building Kit System	Yes	Yes
Vip system	Yes	Yes
Compatible with audio group	1622, 1622VC, 1682, 1682HVC, 1621	1622, 1622VC, 1682, 1682HVC, 1621
Compatible with audio / video unit	4680C, 4682HC, 4681	4680C, 4682HC, 4681
Type	Modular panel	Modular panel
Type of finish	Polymeric	Stainless-steel 316 finish
Audio system	Yes	Yes
Audio/video system	Yes	Yes
Flush-mounted	Yes	Yes
Wall-mounted	Yes	Yes
Rain shield (optional)	Yes	Yes
Buttons to call	Yes	Yes
Total buttons	1/100	1/100
Digital call	Yes	Yes
Operating temperature (°C)	-25÷55	-25÷55
IP protection rating	IP54	IP54

Installation

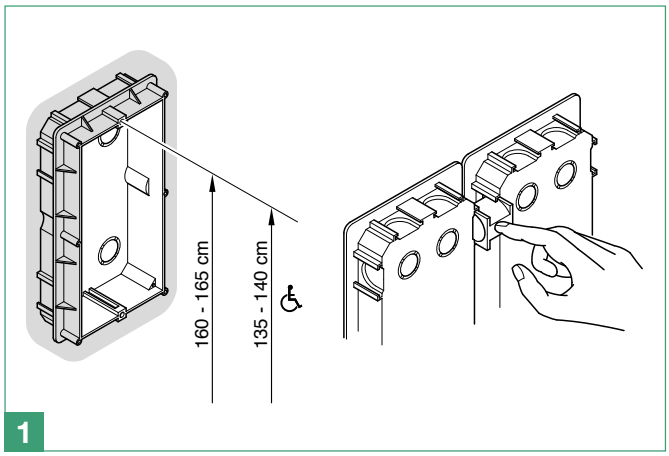

1

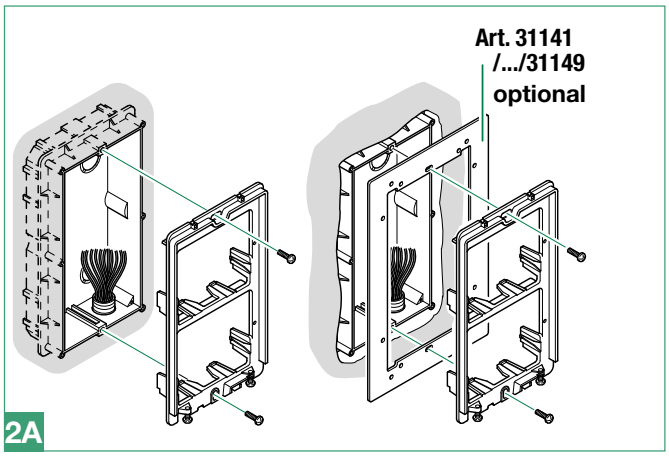

2A

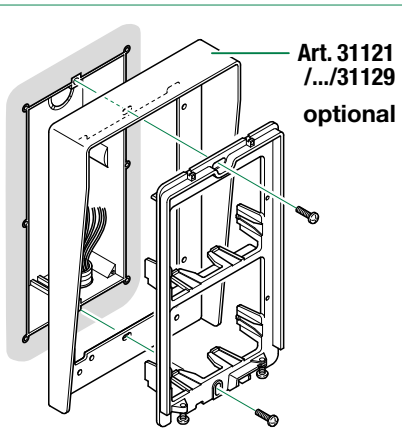

2B

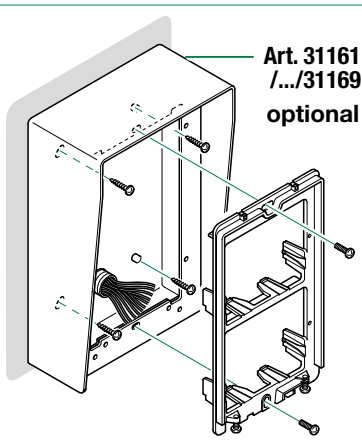

2C

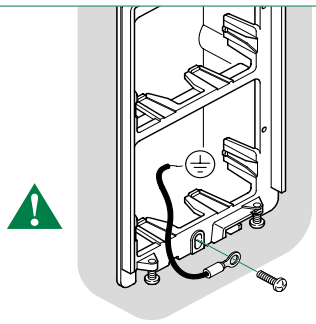

Connect the module support frame to earth

3

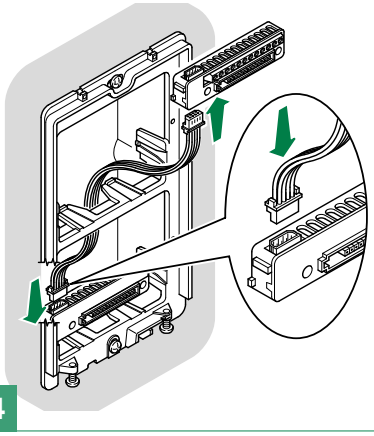

4

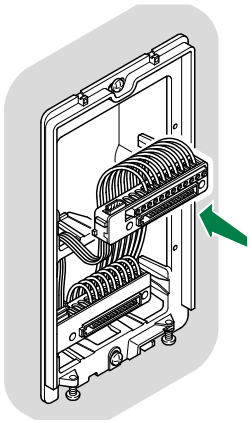

5

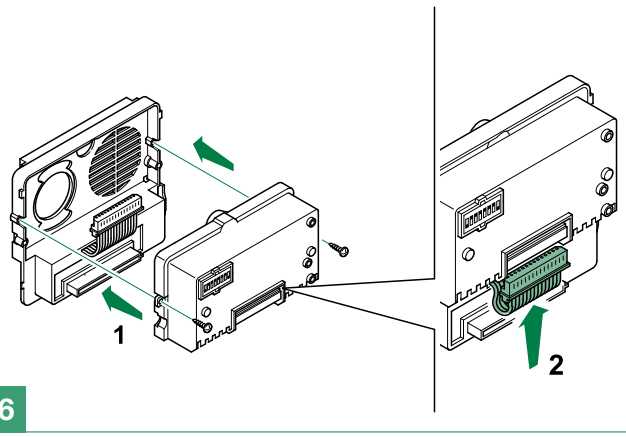

6

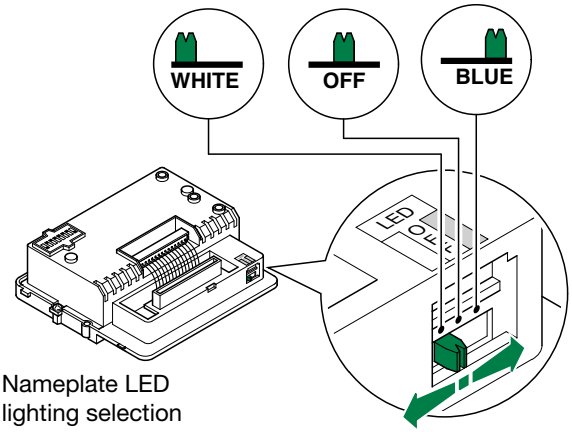

Nameplate LED lighting selection

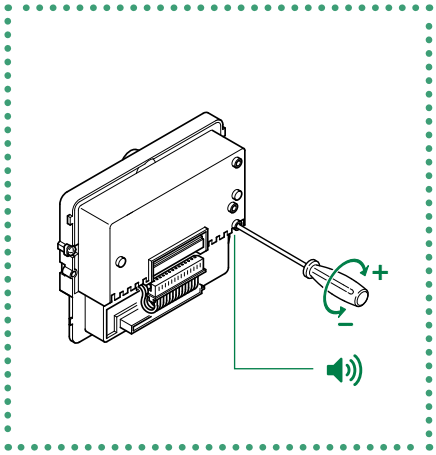

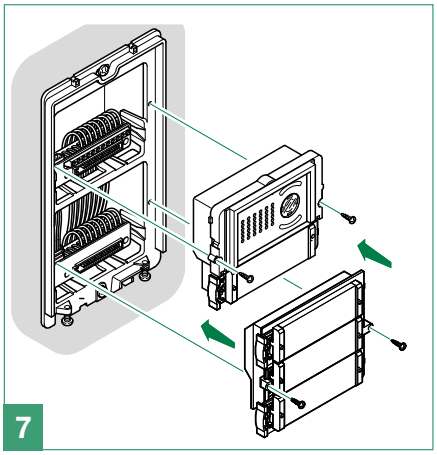

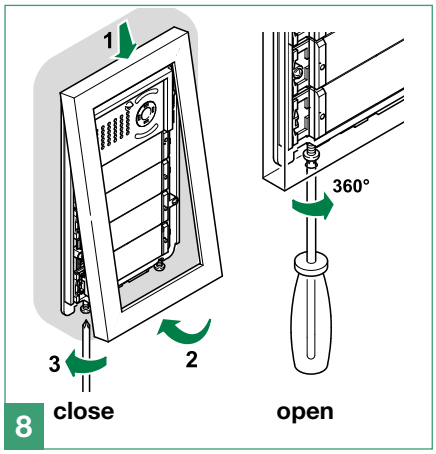

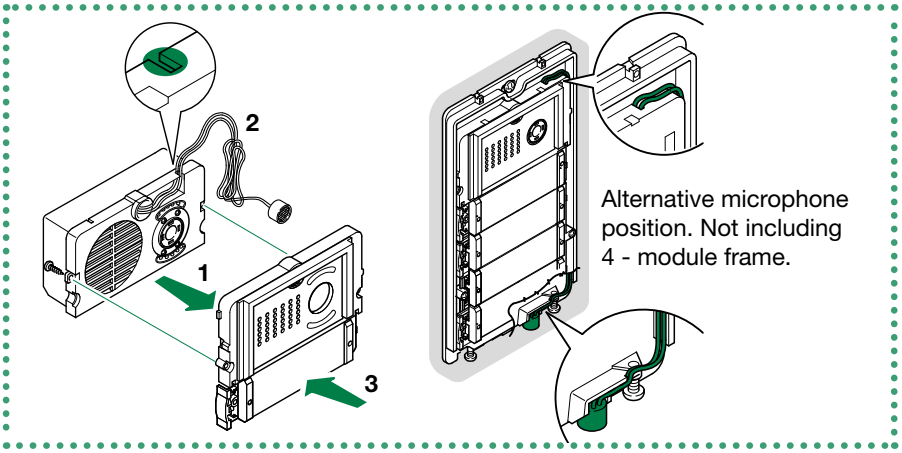

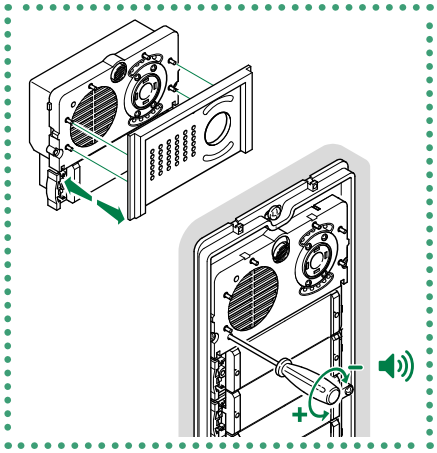

Insertion of name labels

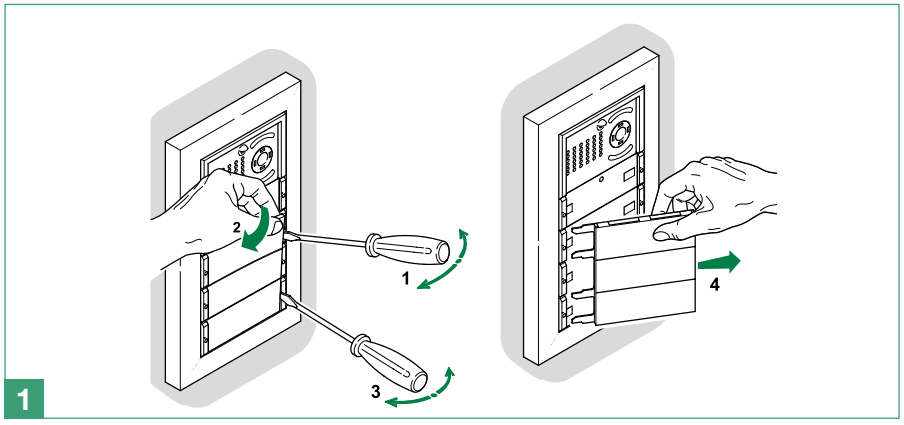

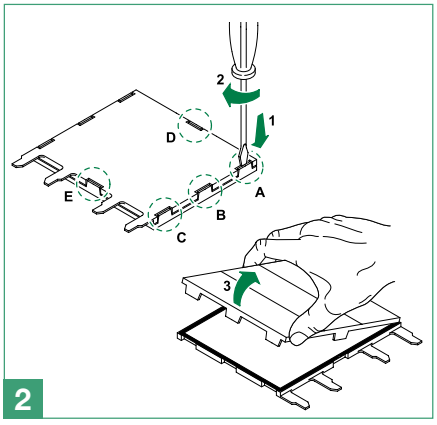

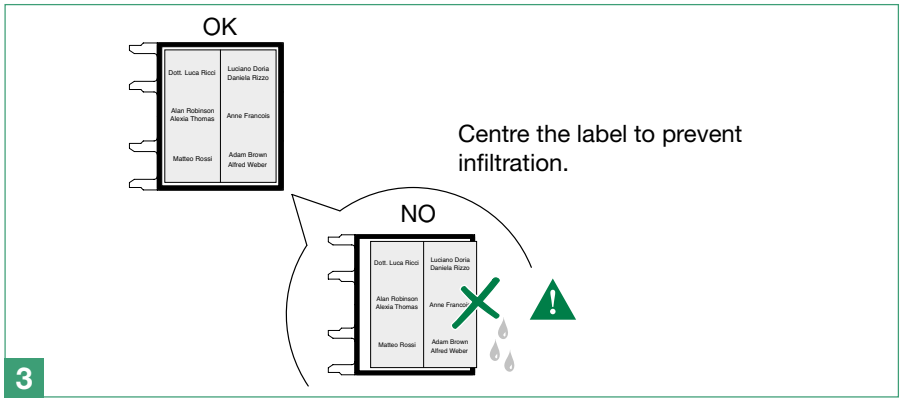

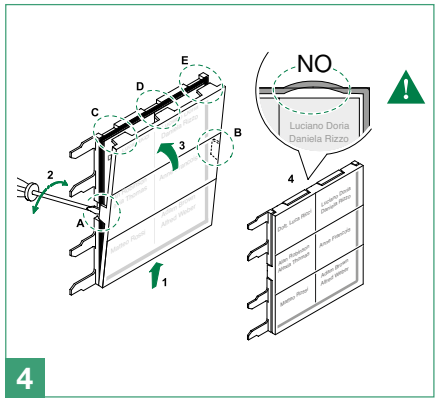

Table of contents

Warning

Description 373

Programming and operation 373

- Entering the supercode 373
- Relay codes: first programming 374
- Using relay codes 374
- Cancelling relay codes 374
- Bistable/Monostable operation 375
- Anti-coercion function 375
- Programming the allowed errors number 376
- Programming the relay 1 activation delay for a remote key input 376
- Actuator function 376

Technical specifications 378

System performance and layouts 378

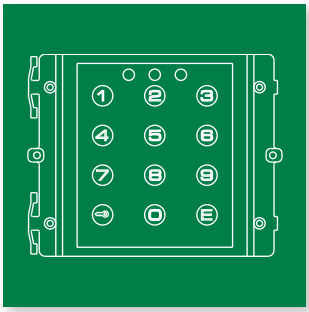

Digital electronic key module Art. 3348B / 3348BM

Description

Art. 3348B / 3348BM for mounting in iKall modular keypads for mixed access control - entry panel - video entry panel installations or stand-alone applications.

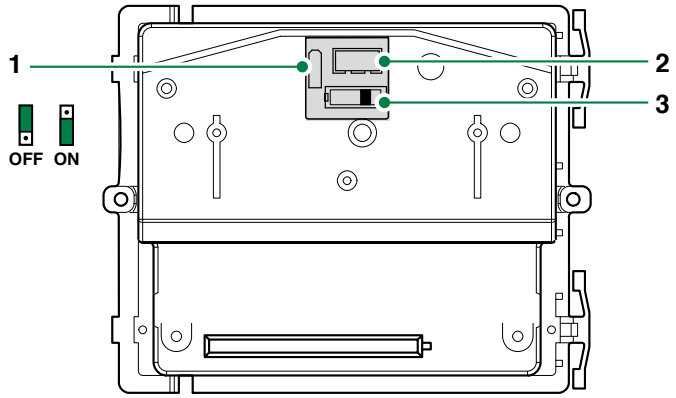

1. Jumper for entering supercode
2. Connector to be used for connection to Simplebus system.
3. Switch for selecting the LED lighting colour. Leave the switch set to OFF for Simplebus systems

	TERMINAL BLOCK - DESCRIPTION
~ – ~ +	power supply 12V DC/AC
CK	“key” button enable input
AL+	alarm and anti-coercion output, max. 100 mA
NO2 – C2– NC2	relay 2
NO1 – C1– NC1	relay 1
–	negative
RK	remote key input
D+ D–	RS 485 line connection

Programming and operation

There is a timeout for programming procedures after which the operation is cancelled (around 40” between successive keystrokes); we recommend familiarising yourself with the procedure before starting it.

Entering the supercode

Programming the supercode is the first operation, because all subsequent steps depend on it.
We recommend using a short, easy to remember supercode, or noting it down on a sheet of paper.

Procedura di inserimento del supercodice

1. Move jumper to the ON position (see figure).
2. Connect the module to the corresponding wired and powered terminal.
3. Check that the red LED has lit up.
4. Enter the supercode (1 to 8 digits).
5. Press “**E**” to store the code.
6. Wait for 10 seconds or for the confirm tone to sound.
7. Move jumper to the OFF position (see figure).

Example
To enter supercode 12345, proceed as follows:
- *move the jumper to the ON programming position;*
- *connect the module to the corresponding wired and powered terminal;*
- *enter in sequence 1 2 3 4 5 E;*
- *wait for 10 seconds or for the confirm tone to sound;*
- *move the programming jumper to its previous OFF position.*

- **If you make an error in entering the code, press the “key” button several times to cancel the operation.**
- **You must always enter “E” at the end of the operation, whether during programming or normal use.**
- **Modifying or changing the supercode resets all other programmed settings (including relay codes).**
- **The supercode cannot be reset to a default value, but only replaced.**

Relay codes: first programming

To program the relay codes, you must first know the supercode. The red LED on the keypad stays on during the programming procedure.
In case of error, it flashes briefly and then turns off, after which you must start again from the beginning of the procedure.

Relay codes: first programming procedure

1. Enter “**0**” and “**E**” (start programming procedure code).
2. Check that the red LED has lit up.
3. Enter the **supercode** followed by “**E**”.
4. Enter the relay ID **number** (1 or 2) followed by “**E**”.
5. Enter the operating mode (see **"Bistable/Monostable operation"**), then “**E**”.
6. Enter the new code followed by “**E**”.
7. The LED should now turn off.

Example

To enter code 55127 for relay 1 in bistable mode (on/off), make the following keystrokes:

- *0 E start procedure*
- *12345 E supercode*
- *1 E relay 1 ID*
- *O E bistable operating mode*
- *55127 E new cod*

Using relay codes

Using relay codes After programming is completed, you can activate relay 1 by simply entering: 55127 E. In this example, the operating mode has been set to 0, in other words, bistable (on/off).

To activate monostable operation, see **"Bistable/Monostable operation"**.

Up to 400 codes can be set relay 1 or relay 2.
If you attempt to enter a code which has already been stored, an error is indicated.

Cancelling relay codes

The following procedure cancels stored codes from memory:

1. Enter “**0**” and “**E**” (start programming procedure code).
2. Check that the red LED has lit up.
3. Enter the supercode (see **"Entering the supercode"**), followed by “**E**”.
4. Enter “**0**” (cancel code) followed by “**E**”.
5. Enter the **code** to be cancelled, followed by “**E**”.
6. The LED should now turn off.

Example

To cancel code 55127, enter in sequence:

- *0 E start procedure*
- *12345 E supercode*
- *0 E cancel*
- *55127 E code to be cancelled*

Bistable/Monostable operation

The relays can be programmed to operate in bistable (on/off) or monostable (timed) modes (the period of activation can also be set in the latter case).

Bistable mode
entering the value “0” sets the relay to activate when the code is first entered, then de-activate when it is next entered.

Monostable mode
entering a value in the range 1 to 99 sets the relay to activate when the code is entered and de-activate automatically once the specified period of time (1 to 99 seconds) has expired.

Modifying relay timing
To modify the relay timing, first cancel the relay code (see **"Cancelling relay codes"**) and then enter another one.

Example

If relay 1 was activated with code 55127 in bistable mode, proceed as follows to change its mode to monostable:

1) Cancel the code by entering in sequence:

- *0 E start procedure*
- *12345 E supercode*
- *0 E cancel*
- *55127 E code to be cancelled*

2) Re-enter the code with the desired operating mode:

- *0 E start procedure*
- *12345 E supercode*
- *1 E identification*
- *5 E monostable mode, 5” delay*
- *55127 new code.*

After this, relay 1 will activate on entry of code 55127 in monostable mode for 5”.

Anti-coercion function

When the operator must be able to send an alarm without being noticed, the anti-coercion function can be activated. The anti-coercion function, composed of a single digit, must be entered after one of the relay codes, and activates not only the relay in question, but also the timed anti-coercion output (5”) (output AL+).

Programming the anti-coercion function:

1. Enter “**0**” and “**E**” (start programming procedure code).
2. Check that the LED has lit up.
3. Enter the **supercode** (see **"Entering the supercode"**), then “**E**”.
4. Enter “**4**” (select anti -coercion function), then “**E**”.
5. Enter the anti-coercion code (1 digit from 1 to 9), then “**E**”.
6. The LED should now turn off.

Example

To set an anti-coercion code of 3, enter in sequence:

- *0 E start procedure*
- *12345 E supercode*
- *4 E anti-coercion function*
- *3 E anti-coercion code*

Now, when the relay code is followed by the anti- coer cion code, the output relay as well as the anti-coercion output will both be activated (the latter timed to 5” approx): 71032 3 E.

The anti-coercion code MUST be entered after the relay code and before the final E.
When the anti-coercion function is activated, the relay code may not be more than 7 digits long.
The anti-coercion output is between 12 Vdc and earth (max. 100 mA).

Programming the allowed errors number

This allows you to set the number of code entry errors allowed before the locking function is activated. If, for example, you set a value of 3, on the third incorrect code entry the key is locked for a period of 1 minute. You can also send an alarm signal (output **AL**+), after the allowed number of errors, if this is provided for during programming. To send the alarm, program "**1**" during the procedure, otherwise program "**0**" (see below).
An incorrect code entry is the entry of a code not stored during programming, followed by "**E**".

Programming the allowed errors number:

1. Enter "**0**" and "**E**" (start programming procedure code).
2. Check that the LED has lit up.
3. Enter the **supercode** (see **"Entering the supercode"**), then "**E**".
4. Enter the number "**5**" (error lock function) followed by "**E**".
5. Enter the allowed number of errors (1-9), but **DO NOT** enter "**E**".
6. Enter: "**1**" "**E**" to send an alarm when the key is locked; "**0**" "**E**" if you do not wish to send an alarm.
7. The LED should now turn off.

Example

To program key locking after 3 errors without sending an alarm, enter in sequence:

- *0 E* *start procedure*
- *12345 E* *supercode*
- *5 E* *error function*
- *3* *number of allowed errors*
- *0 E* *do not send alarm*

Programming the relay 1 activation delay for a remote key input

This procedure sets the activation time for relay 1 on a remote input. Values from 1 to 99 can be set.
The default timing is 5 seconds.

Example

To set the activation time to 10 seconds, enter in sequence:

- *0 E* *start procedure*
- *12345 E* *supercode*
- *6 E* *Remote Key timing function*
- *10 E* *relay activation time*

Actuator function

One of the relays of 3348B can be used on the generic actuator command originating from the Simplebus Bus.
Special programming is required on the external unit as described in the TMs for Art. 4680, 4680C, 4681 and for 1621, 1622.

Programming the actuator function:

1. Enter "**0**" and "**E**" (start programming procedure code).
2. Check that the LED has lit up.
3. Enter the **supercode** (see **"Entering the supercode"**), then "**E**".
4. Enter the number "**7**" ("actuator" function) followed by "**E**".
5. Enter the number of the relay to be associated with the command (1-2) followed by "**E**".
6. Enter a number from **1** to **99** to indicate the monostable mode seconds value, or enter "**0**" if you want bistable mode, followed by "**E**".
7. The LED should now turn off.

Cancelling the actuator function:

1. Enter “**0**” and “**E**” (start programming procedure code).
2. Check that the LED has lit up.
3. Enter the supercode (see **"Entering the supercode"**), then da “**E**”.
4. Enter the number “**7**” ("actuator" function) followed by “**E**”.
5. Enter “**0**” and “**E**”
6. The LED should now turn off.

Example

Programming the actuator function:

- *0 E* *start procedure*
- *12345 E* *supercode*
- *7 E* *actuator function*
- *1 E* *relay number*
- *10 E* *relay closure time*

ENABLING THE “KEY” BUTTON
Short-circuiting terminals **CK** and -, for example via a timer, makes it possible to activate relay 1 without entering the relay code but by simply pressing the “key” button

REMOTE KEY INPUT (RK)
Closing this contact with ground activates relay 1 for the set time (see **"Programming the relay 1 activation delay for a remote key input"**). The contact can be connected remotely up to 20 m max.

Technical specifications

GENERAL INFO	
Available codes	402 total available codes: - one supercode; - 400 relay codes. The available codes can be distributed in any way between relay 1 and relay 2. Example: 245 different codes for relay 1, and 155 different codes for relay 2; - one anti-coercion code
Available outputs	2 on independent relays, plus 1 at 12 Vdc
Operation of the relay outputs	keypad programmable, mono- or bistable
Monostable mode	pulse programmable from 1” to 99” approx.
Supercode	1 to 8 repeatable digits
Relay codes	1 to 8 repeatable digits
Anti-coercion code	1 digit.
Remote key input	Yes
Programming input	Yes
Single-key operation mode input (timetable programmer)	Yes
LED	3 LEDs, depending on model: - 2 to indicate relay closure and 1 to indicate programming mode
Outputs (NO-NC), potential free	Yes
Contact capacity	24V AC/DC MAX
Service output	max 100 mA
Switch	Switch (C) on the back of the module for selecting the LED lighting colour. Leave the switch set to OFF for Simplebus systems
Operating temperature	-10°C to +50°C
Product height (mm)	180
Product width (mm)	112
Product depth (mm)	43

ELECTRICAL SPECIFICATIONS	
Power supply	12V AC/DC stand-alone. If connecting to a Simplebus system, use connector (B) on the back of the module
Power Consumption	250 mA 12V AC with 2 relays active

System performance and layouts

For further information of system performance and to view installation layouts, click on the system type that best meets your requirements:

- **Building Kit audio/video system** for the creation of audio-video systems for *small apartment blocks.*
- **SBTOP audio/video system** for the creation of audio-video systems for *residential complexes.*
- **SB2 audio system** for the creation of audio systems for *residential complexes.*
- **SB1 audio system** for the creation of audio systems for *residential complexes.*

Table of contents

Warning

General description 381
Self-testing 382
Setting the language 382
Setting the type of remote connection 383
Use 383
1. Calling a user 383
2. Finding a name in the directory 384
3. Activating the door opening relay by entering the password code 384
Accessing the programming mode 385
Name directory 385
1. Entering names in the directory 385
2. Changing a name or a code in the directory 386
3. Deleting a name in the directory 387
4. Clearing the directory 388
Access control 389
1. Changing the default supercode (778899) 389
2. Restoring the default supercode (778899) 390
3. Entering password codes 390
4. Deleting a password code 391
5. Finding a password code 392
6. Erasing all passwords 392
Settings of the directory module (Art. 3360B) 393
1. Modifying the language setting 393
2. Setting the type of remote connection 394
3. Setting the second language 395
4. Disabling the second language 396
5. Setting call management 396
6. Enabling/disabling name-only display 399
7. Enabling/disabling the welcome message 400
8. Entering the welcome message 401
9. Enabling/disabling the static message 402
10. Enabling/disabling the screensaver 402
11. Changing the keypad sensitivity 403
12. Changing keypad speed 403
13. Enabling/disabling the keypad tone 404
14. Restoring the default values of the directory module 405
15. Changing the RS485 address of the porter module 406
16. Viewing the number of names entered in the directory, the software version, the number of passwords entered and the ID code (RS485 address) 407
Standard settings of the porter module (Art. 1622, 1621, 4680C, 4681) 408
1. Setting the porter module parameters (audio time, door lock time, reset time) .. 408
2. Viewing the porter module parameters (audio time, door lock time, reset time). 409
Advanced settings of the porter module (Art. 1622, 1621, 4680C, 4681) 410
1. Lock on SE 410
1A Setting the type of door lock on the SE output of the porter module 410
1B Enabling/disabling the door lock confirmation tone on the porter module 411
1C Enabling/disabling the standby lock release on the porter module 412
1D Viewing the parameters of the door lock on the SE output of the porter module 412
2. Relay contact 413
2A Enabling/disabling the actuator function on the relay contact 413
2B Enabling/disabling the relay contact in parallel to the porter module SE output 414
2C Viewing the relay contact parameters 414
3. S serial 415
3A Enabling/disabling the actuator function on the S serial line 415
4. Voice messages 416
4A Enabling/disabling voice and visual messages on the porter module 416
5. Call 417
5A Abilitare/disabilitare la chiamata tripla 417
5B Enabling/disabling the call confirmation tone 418
5C Enabling/disabling the call codes booster 419
5D Setting the call answer wait time 420
5E Viewing the porter module call parameters 420
6. Self-ignition 421
6A Enabling/disabling self-ignition 421
7. Ripristina default 422
7A Restoring the default values of the porter module 422
Software Art. 1249B 423
1. Installing the USB driver for connecting Art. 3360B to a PC 423
2. Using the directory via software Art. 1249B 423
3. Multidownload 424
Menu diagram 425

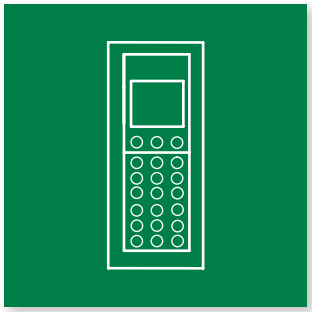

Digital call module Art. 3360B/3360BM

General description

- *The Comelit digital call module Art. 3360B can be used in Simplebus, Simplebus Top Building Kit and Vip systems, and is*
- *fitted with a name directory to store a list of names and passwords as well as an alphanumerical keypad to call users by*
- *entering their identification code.*
- *The main characteristics are as follows:*
- *Display resolution: 128X64 dots/pitch*
- *Directory memory: 3500 names of 20 alphanumerical characters and 6000 password codes*
- *20 languages available for displaying messages on the name directory and, when the second language is set, the*
- *user interface will switch alternately between the main language and the second language* (see **"3. Setting the second**
- **language" page 12"**)
- 4 Simplebus or Simplebus Top call management modes (see **"5. Setting call management" page 13"**):
- Standard
  Indirect code
  Immotec standard
  Immotec indirect
- Display of name only without code (see **"6. Enabling/disabling name-only display" page 15"**)
- Screensaver (seei **"10. Enabling/disabling the screensaver" page 17"**)
  Option of customising:
- Keypad sensitivity (see **"11. Changing the keypad sensitivity" page 17"**)
- Changing keypad speed (see **"12. Changing keypad speed" page 18"**)
- Keypad tone (see **"13. Enabling/disabling the keypad tone" page 18"**)
- Initial welcome message on 4 lines of 10 characters each (see**"8. Entering the welcome message" page 16"**)
  With software Art. 1249B it is possible to:
- Enter (download) and read (upload) names and passwords by connecting to a computer via USB or on RS485 serial line using interface card Art. 20022618 (**see diagram**)
- Initial welcome message on 4 lines of 10 characters each (see **"8.Entering the welcome message" page 16"**)
- Customise the standby messages displayed on the name directory

Alphanumeric keypad	Special characters
0	space 0
1	ABCÅÄĄÆßČĆ1
2	DEFÉĘĚ2
3	GHI3
4	JKLŁ4
5	5 MNOŃÖØÓ5
6	PQRS6
7	TUVÜ7
8	WXYZ8
9	,;:._-#*"9
A	A
B	B
C	C
D	D
E	E
F	F

For the programming and use of Art. 3360B in ViP systems, see the Vip System technical manual, available from **pro.comelitgroup.com**

Self-testing

On power-up, the device carries out a diagnostic test of the connections to check the correct communication and configuration of the porter module (Art. 1622, 1622VC, 1621, 1621VC, 1682, 1682HVC, 4680C, 4681, 4682HC).

*The message **PLEASE WAIT** indicates self-testing in progress.*

On completion of self-testing, press the (X) key to put the module in standby.
*The word **OK** should appear next to the menu items with the name **SIMPLEBUS**, **SIMPLEBUS TOP** or **ViP** underneath, depending on the configuration of the porter module and the directory module.*

If the following message appears:

- ***FAILED** check correct serial connection between directory module and porter module Art. 1622, 1622VC, 1621, 1621VC, 1682, 1682HVC, 4680C, 4681, 4682HC.*
- ***ERROR** check congruency of configuration (SIMPLEBUS, SIMPLEBUS TOP or VIP) of directory module and porter module seemodulo porter (see "5.Setting call management" page 13).*

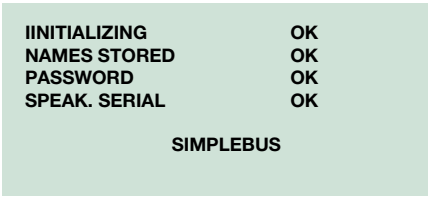

Setting the language

When you switch the system on, you will be asked to select the desired language.

1. to display the language that you want to select, scroll through the list using (△)(▽)
   DEFAULT = *Italiano*

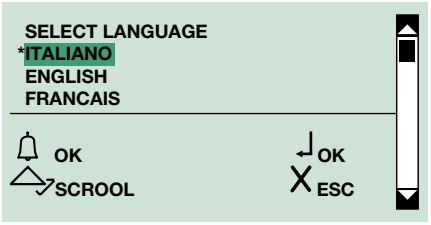

2. press (🔔) o (🚗) to confirm

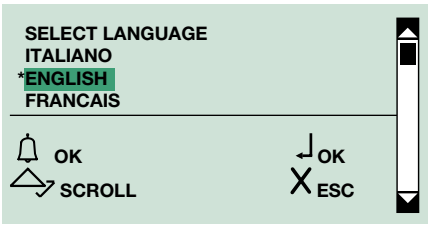

» *** indicates language selected*

3. to exit, press (X)

Setting the type of remote connection

In SIMPLEBUS/SIMPLEBUS TOP and with USB connected: when you switch the system on, you will be asked to select the type of download

1. To select the type of download, scroll through the list using ⏶⏷

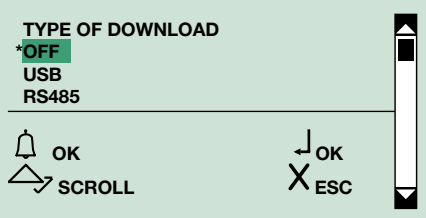

For downloading in RS485 mode, vedi diagram
The download via USB function is not available in ViP mode.
To avoid malfunctions: during download in USB mode, the keypad must not bepowered by an external source.

2. press 🔔 or ⊶ to confirm

» **indicates the type of download selected*

3. to exit, press ✕

Use

1. Calling a user

▶ standby mode

1A. enter the user code (e.g. 2)

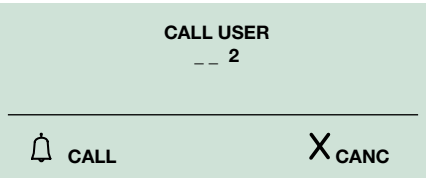

1B. or scroll through the directory using ⏶⏷

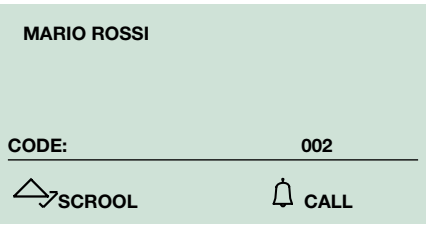

2. to call, press 🔔

3. to exit, press ✕

2. Finding a name in the directory

▶ standby mode

1. Premere (🔔)



2. enter the name using the alphanumeric keypad, for the use of special characters see table on see table

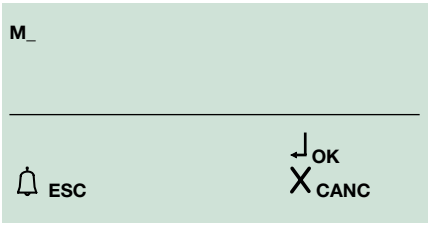

3. to confirm the first letter of the name, press (⊶)

4. to display the name, scroll through the directory using (△)(▽)

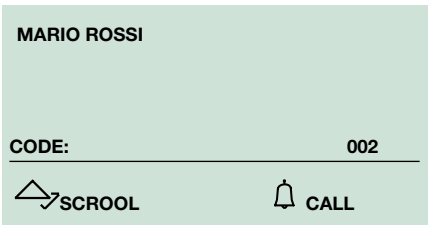

▶ to exit, press (X)

3. Activating the door opening relay by entering the password code

▶ standby mode

1. Press (⊶)

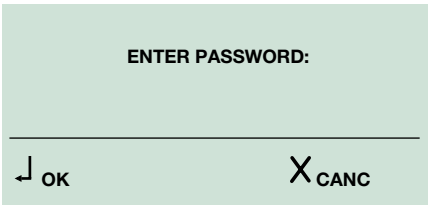

2. enter the password code



3. press (⊶) to confirm

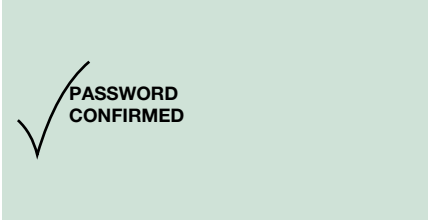

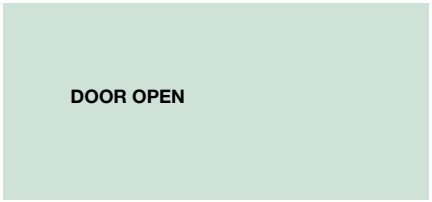

4. to exit, press (X)

Accessing the programming mode

1A. connect terminal PRG to GND and power up the module

1B. or press (key) and enter the default supercode 778899

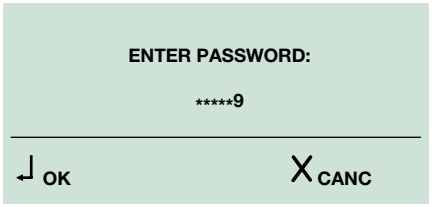

2. press (key) to confirm

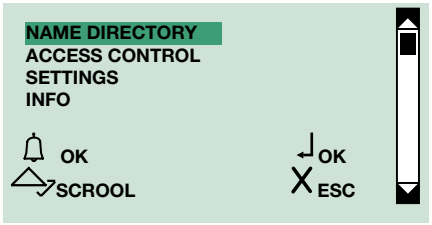

Name directory

1. Entering names in the directory

1A. Automatic entry

It is possible to download a name list using **software Art. 1249B**.

not available if the call mode is IMMOTEC STANDARD or IMMOTEC INDIRETTO

1B. Manual entry

1. access programming mode

2. select the menu items:
Name directory ⇒ **Enter names**

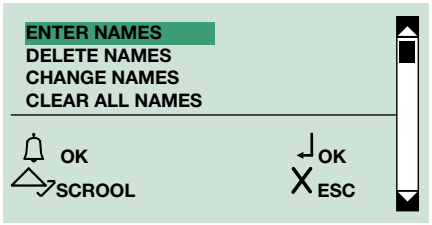

3. press (bell) or (key) to confirm

4. enter the name using the alphanumeric keypad, for the use of special characters **see table**

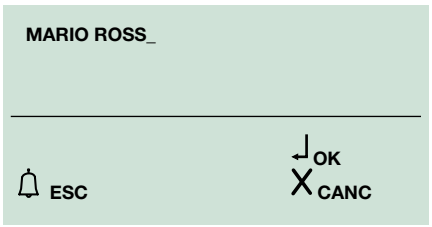

5. to confirm, press (key)

6. enter the code (max. 3 digits) using the alphanumerical keypad

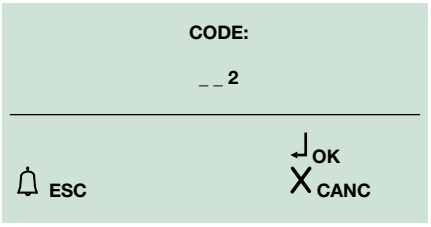

7. press (key) to confirm

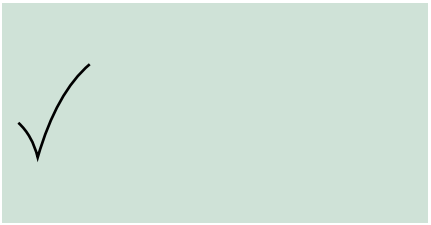

8. to exit, press (X)

2. Changing a name or a code in the directory

not available if the call mode is IMMOTEC STANDARD or IMMOTEC INDIRETTO

1. access programming mode

2. select the menu items:
Name directory ⇒ **Change names**

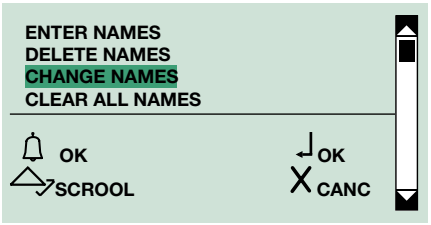

3. press (bell) or (key) to confirm



4. enter the name using the alphanumeric keypad, for the use of special characters see table

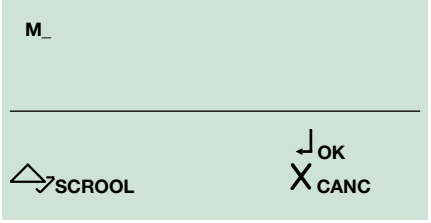

5. to confirm the first letter of the name, press (key)

6. to display the name that you want to change, scroll through the directory using (△) (▽)

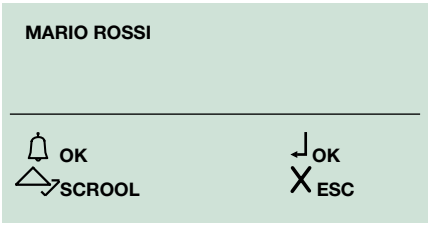

7. to confirm the selected name that you want to change, press (bell) or (key)

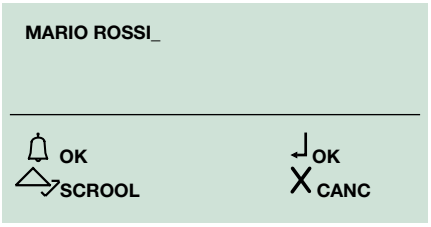

8. change the name using the alphanumeric keypad, for the use of special characters see table
9. press (bell) or (key) to confirm
10. change the code (max. 3 digits) using the alphanumerical keypad

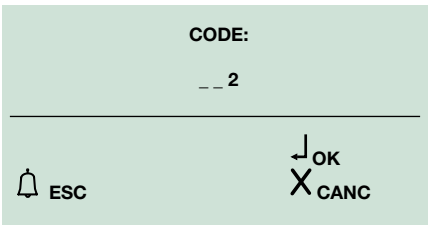

11. press (bell) or (key) to confirm



12. to exit, press (X)

3. Deleting a name in the directory

not available if the call mode is IMMOTEC STANDARD or IMMOTEC INDIRETTO

1. access programming mode
2. select the menu items:
   Name directory ⇒ Delete names

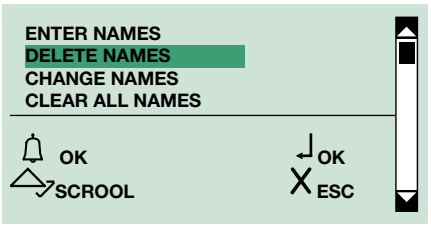

3. press (bell) or (key) to confirm



4. enter the name using the alphanumeric keypad, for the use of special characters see table

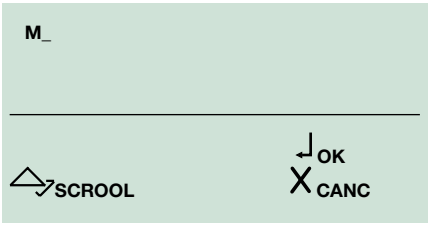

5. to confirm the first letter of the name, press

6. to display the name that you want to change, scroll through the directory using

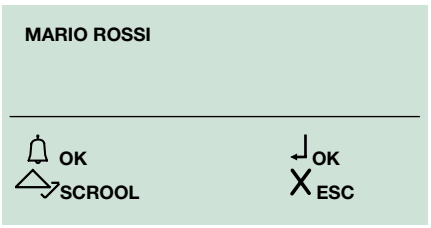

7. to confirm the selected name that you want to delete, press or

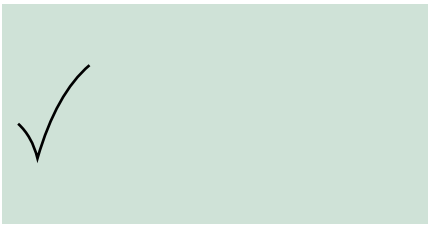

8. to exit, press

4. Clearing the directory

1. access programming mode

2. select the menu items:
Name directory ⇒ **Clear all names**

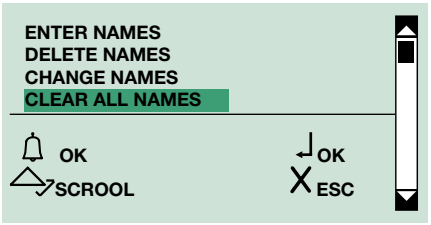

3. press or to confirm

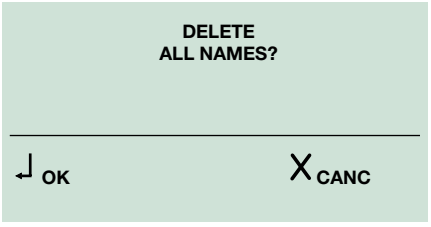

4. press to confirm





5. to exit, press (X)

Access control

1. Changing the default supercode (778899)

The supercode (778899 is the default code) is used to access the programming menus.

1. access programming mode

2. sselect the menu items:
Access control ⇒ **Supercode** ⇒ **Enter new code**

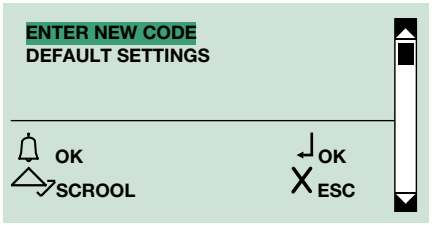

3. press (bell) or (key) to confirm

4. Modificare il supercodice (6 caratteri max composto da numeri e/o lettere dalla A alla F) tramite la tastiera alfanumerica

The supercode must be at least 4 characters long.

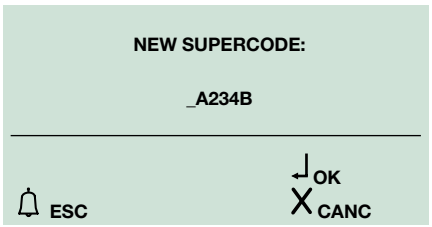

5. press (key) to confirm



6. to exit, press (X)

2. Restoring the default supercode (778899)

1. access programming mode
2. select the menu items:
   Access control ⇒ **Supercode** ⇒ **Default settings**

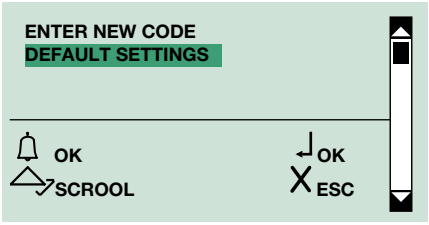

3. press (bell) or (key) to confirm



4. to exit, press (X)

3. Entering password codes

1A. Automatic entry

It is possible to download a password list using software Art. 1249B.

1B. Manual entry

1. access programming mode
2. select the menu items:
   Access control ⇒ **Password** ⇒ **Enter**

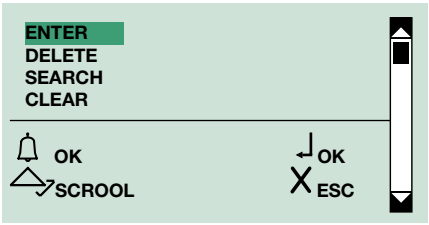

3. press (bell) or (key) to confirm
4. enter the password (max. 6 characters consisting of numbers and/or letters from A to F) using the alphanumeric keypad

The password must be at least 4 characters long

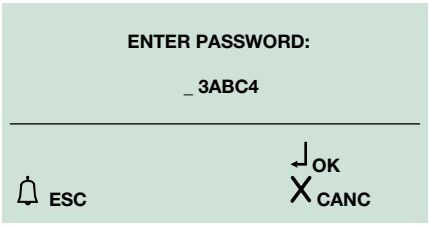

5. press (key) to confirm

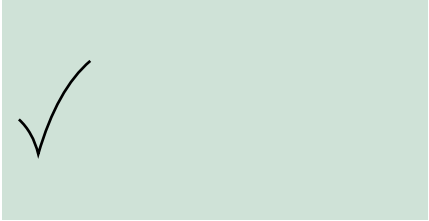

6. to exit, press (X)

4. Deleting a password code

1. access programming mode
2. select the menu items:
   Access control ⇒ **Password** ⇒ **Delete**

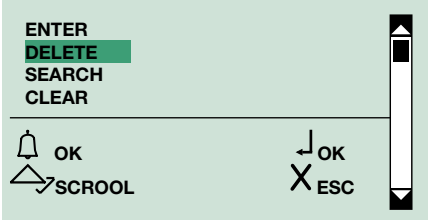

3. press (bell) or (key) to confirm
4. enter the password that you want to delete using the alphanumeric keypad

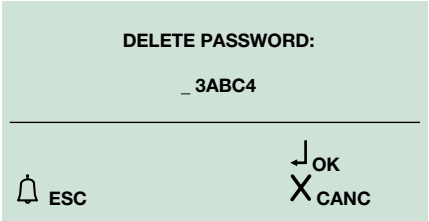

5. press (key) to confirm

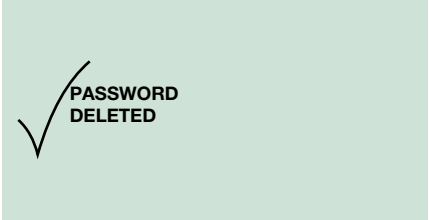

6. to exit, press (X)

5. Finding a password code

1. access programming mode
2. select the menu items:
   Access control ⇒ **Password** ⇒ **Search**

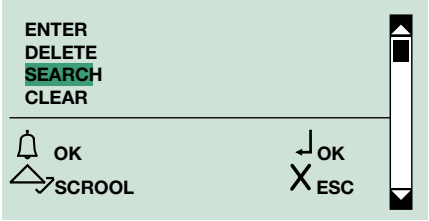

3. press (🔔) or (🔑) to confirm
4. enter the first 4 letters or numbers of the password you are looking for (there is no need for all the characters to be correct: the search will return the password with the same opening characters as the ones you entered)

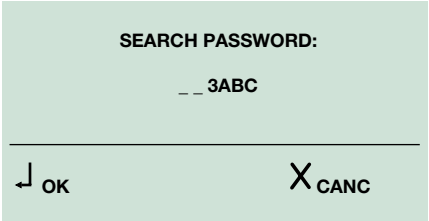

5. press (🔑) to confirm
6. scroll through all the passwords using (△)(▽)



6. Erasing all passwords

1. access programming mode
2. select the menu items:
   Access control ⇒ **Password** ⇒ **Clear**

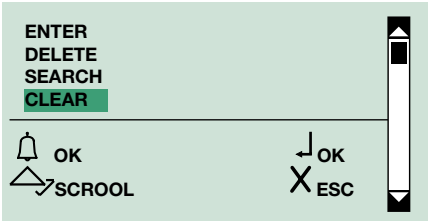

3. press (🔔) or (🔑) to confirm

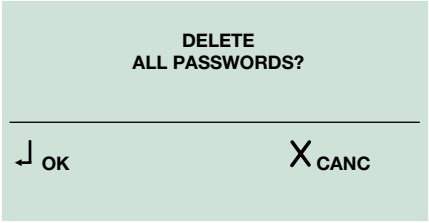

4. press (🔑) to confirm

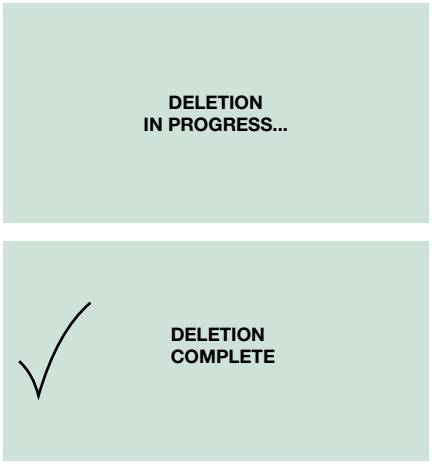

5. to exit, press (X)

Settings of the directory module (Art. 3360B)

1. Modifying the language setting

1. access programming mode

2. select the menu items:
Settings⇒ Select language

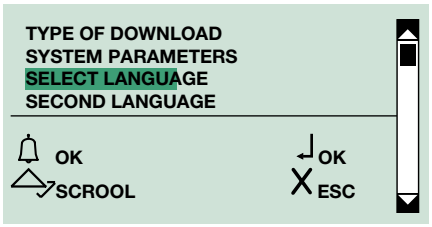

3. press (bell) or (key) to confirm
DEFAULT = *Italiano*

4. to display the language that you want to select, scroll through the list using (△)(▽)

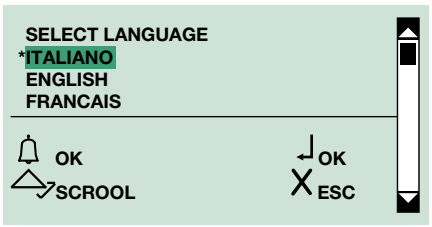

5. press (bell) or (key) to confirm

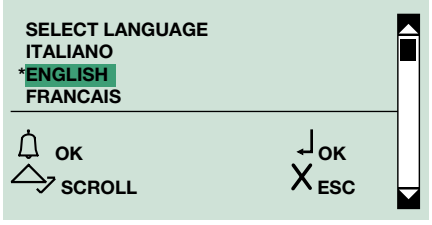

» **indicates language selected*

6. to exit, press (X)

2. Setting the type of remote connection

For downloading in RS485 mode, see diagram

1. access programming mode
2. select the menu items:
   Setting ⇒ Type download

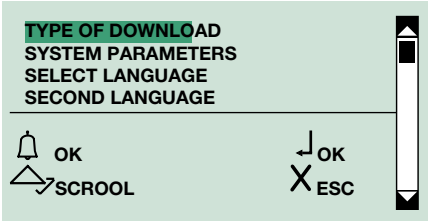

3. press 🔔 or ⊶ to confirm
4. to display the type of download that you want to select, scroll through the list using △ ▽

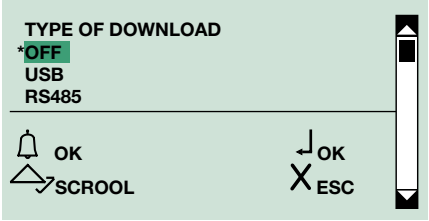

5. press 🔔 or ⊶ to confirm

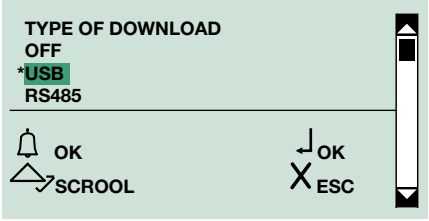

» **indicates the type of download selected*

6. to exit, press ⓧ

3. Setting the second language

This function, if activated, alternately switches the name directory standby messages from the main language(see **"Setting the language"**) to the second language.

The initial welcome message (see"8.8. Entering the welcome message") if entered, will not be switched to the second language.

The second language must be set after the main language has been selected (vedi "Setting the language")

1. **access programming mode**
2. select the menu items:
   Setting ⇒ Second language

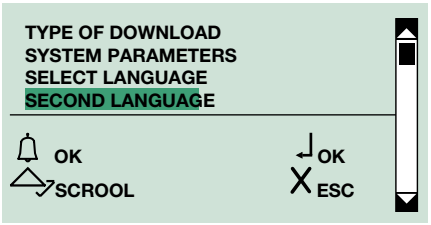

3. press ◯ or ◯ to confirm

» ** indicates the current display language, DEFAULT= deactivate*

4. to display the language that you want to select, scroll through the list using ◯◯

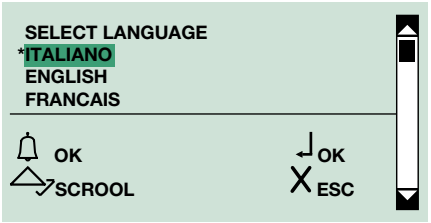

5. press ◯ or ◯ to confirm

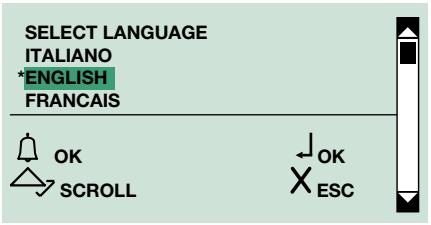

» **indicates language selected*

6. to exit, press ◯

4. Disabling the second language

To cancel the second language function:

1A. set the main language again (see **"Setting the language"**); the second language will be reset automatically

1B. or **access programming mode**

2B. select the menu items:
Setting ⇒ Second language

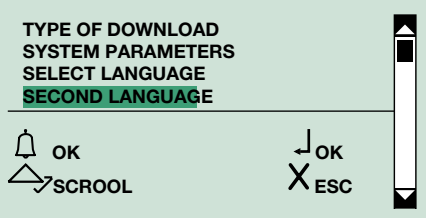

3. press ⓘ or ⓘ to confirm

4. to deactivate select DEFAULT

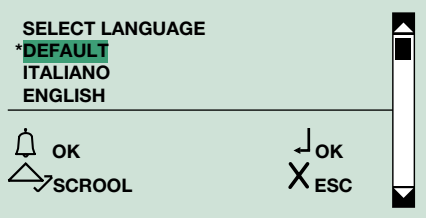

5. Setting call management

It is necessary to set the type of system (Simplebus,Simplebus Top or ViP) and then the call mode (Standard,Indirect code, Immotec standard or Immotec indirect).

Type of system:

for correct operation depending on the type of Simplebus or Simplebus Top system intalled, make sure the audio or audio/video module is also set to the same mode.

SIMPLEBUS (default) for systems without switching devices Art. 1424 in Top 1, 2, 3 mode which define the system zones.

SIMPLEBUS TOP for systems with switching devices Art. 1424 in Top 1, 2, 3 mode which define the system zones
Module Art. 3360B in Simplebus Top mode must be used in conjunction with compatible products (vedi tabella **"Simplebus Top product"**).

VIP for ViP systems.

Call mode:

STANDARD - SIMPLEBUS (default)
In this mode, the user is identified by a Name field and a Code field no longer than 3 digits (between 1 and 240).
Example:
User name= Mario Rossi
Code= 2

STANDARD - SIMPLEBUS TOP
IIn this mode, the user is identified by the Name field (optional) and a Code field consisting of two parts:
zone field with no more than 3 digits (between 1 and 500)
user field which must have 3 digits (between 1 and 240):
Example:
User name= Mario Rossi
Code= 25 015

STANDARD - VIP
In this mode the user is identified by a 8-character alphanumeric ViP address

If you wish to make direct calls from the alphanumeric keypad, the ViP code can only be composed of the following characters: numbers 0, 1, 2, 3, 4, 5, 6, 7, 8, 9; letters A, B, C, D, E, F.

Example:
User name= Mario Rossi
Code= 0A0C1156

The call can be made in the following ways

► standby mode

1A. enter the user code (e.g. 25 015))

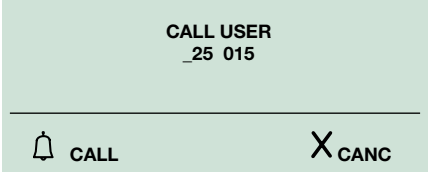

1B. or scroll through the directory using ⏶⏷

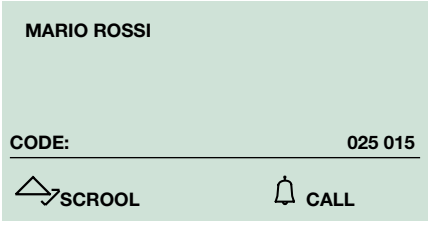

2. to call press 🔔

3. to exit, press ✕

INDIRECT CODE - SIMPLEBUS o **SIMPLEBUS TOP**

In this mode the user is identified by a Name field (optional) and by a Code field which is different for **Simplebus** e **Simplebus Top**, and by an Indirect Code with no more than 6 alphanumerical characters (0...9, A...F).

Example:

User name= Mario Rossi

Code= 2 (for **Simplebus**) or 25 015 (for **Simplebus Top**)

Indirect code= 100

The call can be made in the following ways:

► standby mode

1A. enter the indirect code (e.g. 100)

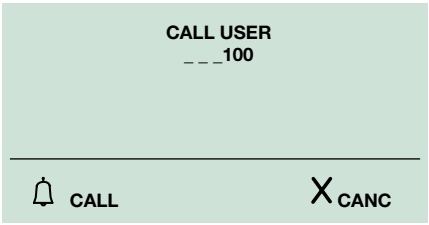

1B. or scroll through the directory using ⏶⏷

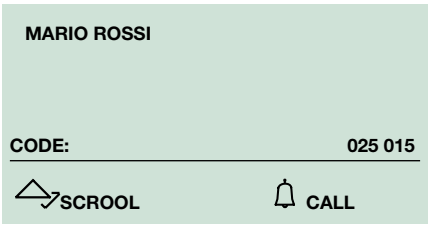

2. to call press 🔔

3. to exit, press ✕

IMMOTEC STANDARD
Digital module Art. 3360B can be used in conjunction with the Simplekey module Art. SK9001, Art. SK9020 by connecting the two products via RS485 (see diagram).
In this configuration, the use of Simplekey access keys (badges) automatically allows entry of the corresponding code/name (new key) or updating of the name only (if the code already exists) in the directory of digital module Art. 3360B.
Since a single user code (apartment) can have up to 2 access keys associated with it under different names, during a numerical code call from the digital module the first name of the 2 in alphabetical order will be displayed.
N.B.: Names cannot be entered and modified manually.
Badge acquisition only takes place when digital mode is in standby.

IMMOTEC INDIRECT
Digital module Art. 3360B can be used in conjunction with the Simplekey module Art. SK9001, Art. SK9020 by connecting the two products via RS485 (see diagram).
In this configuration the use of access keys allows automatic updating of the Simplekey access key (badge) name only, as it appears in the directory of digital module Art. 3360B.
The Immotec indirect codes and corresponding names can only be entered from a PC using software Art. 1249B. Since a single user code (apartment) can have up to 2 access keys associated with it under different names, during a numerical code call from the digital module the first name of the 2 in alphabetical order will be displayed.

N.B.: Names cannot be entered and modified manually.
Badge acquisition only takes place when digital mode is in standby.

to modify the type of system and the call modeit is necessary to erase the entire directory Clearing the directory

1. set the selector on porter module Art. 1622, 1622VC,1621, 1621VC, 4680C, 4681 to ON, see Fig.

2. connect the porter module to the terminal block

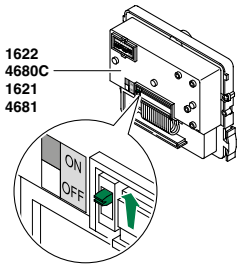

3. access programming mode

4. select the menu items:
Setting ⇒ Call management

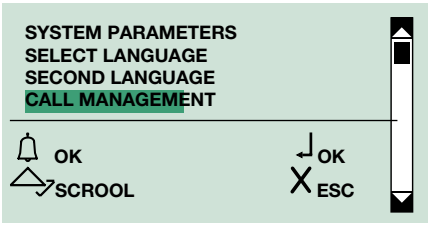

5. press (🔔) or (⊶) to confirm

6. to display the type of system, scroll through the list using (△)(▽)

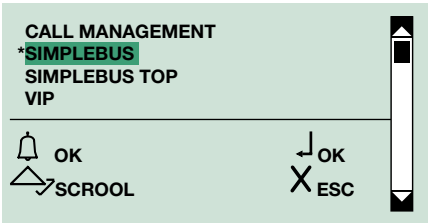

7. press or to confirm

» **indicates the type of system selected*

» *confirmation tone*

8. to display the call mode, scroll through the list using

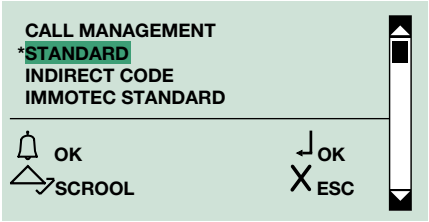

9. press or to confirm

» **indicates the selected call mode*

10. set the selector on porter module Art. 1622, 1622VC,1621, 1621VC, 4680C, 4681 back to OFF, see Fig.

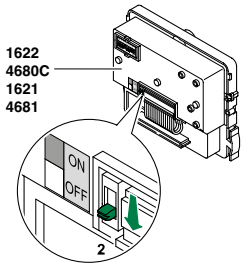

6. Enabling/disabling name-only display

This function is disabled by default.
It allows only the name to be displayed, without the user code, when scrolling through the directory and during a call from a user.

1. access programming mode

2. select the menu items:
Setting ⇒ Name only

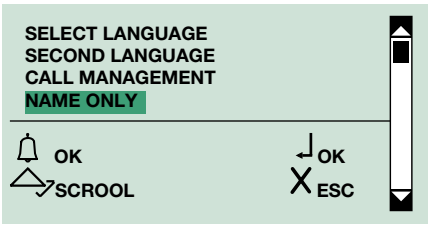

3. press or to confirm

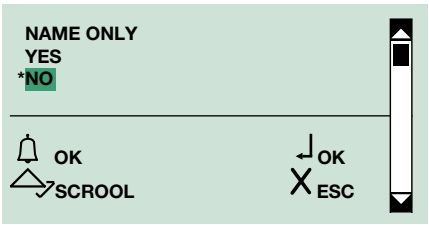

4. select **YES** to enable the function, **NO** to disable it

5. press or to confirm

» **indicates active selection*

7. Enabling/disabling the welcome message

This function can be used to enter a welcome message (MAX 40 characters long, covering 4 lines in block capitals). The welcome message alternates with the normal information screens every 4 seconds.

N.B.: the message cannot be switched to the second language when the SECOND LANGUAGE function is on (see **"3. Setting the second language"**).

1. **access programming mode**
2. select the menu items:
   Setting ⇒ **Welcome message** ⇒ **Enable**

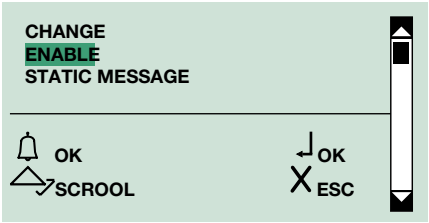

3. press (🔔) or (⊸) to confirm

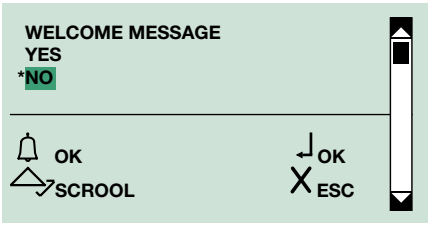

4. select **YES** to enable the function, **NO** to disable it
5. press (🔔) or (⊸) to confirm

» * *indicates active selection*

8. Entering the welcome message

This function is disabled by default.
It is possible to enter the welcome message using software Art. 1249B.

1. access programming mode
2. select the menu items:
   Setting ⇒ **Welcome message** ⇒ **Change**

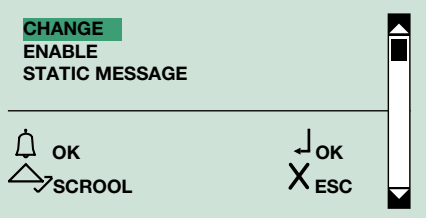

3. press (bell) or (key) to confirm
4. enter the welcome message using the alphanumeric keypad, for the use of special characters see table

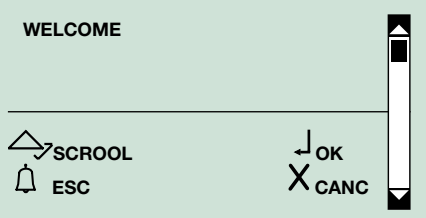

5. press (bell) or (key) to confirm



6. to exit, press (X)

9. Enabling/disabling the static message

This function is disabled by default.
If activated, the welcome message will appear and remain on the display after a 30-second period of inactivity

1. access programming mode
2. select the menu items:
   Setting ⇒ Welcome message ⇒ Static message

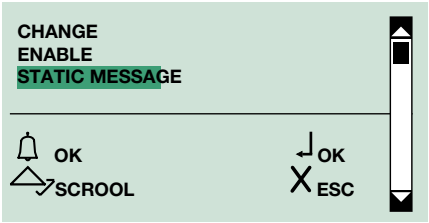

3. press 🔔 or ⊶ to confirm

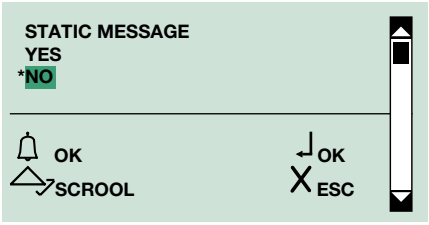

4. select **YES** to enable the function, **NO** to disable it
5. press 🔔 or ⊶ to confirm

» **indicates active selection*

10. Enabling/disabling the screensaver

This function is disabled by default.
If activated, the screensaver will appear after a 30-second period of inactivity.

1. access programming mode
2. select the menu items:
   Setting ⇒ Screen saver

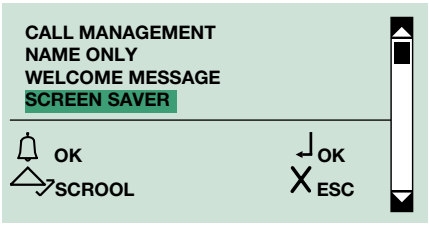

3. press 🔔 or ⊶ to confirm

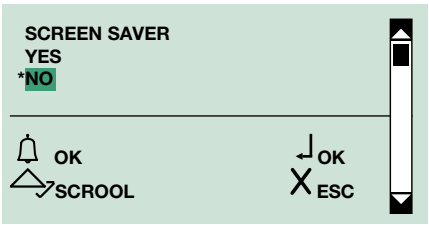

4. select **YES** to enable the function, **NO** to disable it
5. press 🔔 or ⊶ to confirm

» **indicates active selection*

11. Changing the keypad sensitivity

The default keypad sensitivity setting is medium.

1. access programming mode
2. select the menu items:
   Setting ⇒ Sens. tastiera

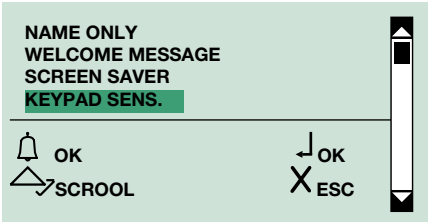

3. press ◯ or ◯ to confirm
4. select desired keypad sensitivity using ◯ ◯

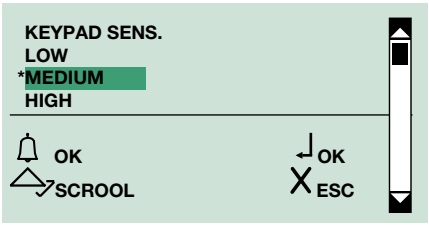

5. press ◯ or ◯ to confirm

» **indicates the selected keypad sensitivity setting*

12. Changing keypad speed

The “keypad speed” parameter determines the speed with which prolonged pressing of a key is converted into “multiple presses of the same key”.
The default keypad speed setting is high

1. access programming mode
2. select the menu items:
   Setting ⇒ Keypad Speed

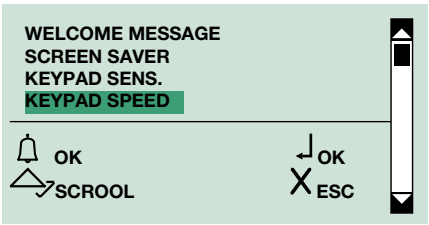

3. press ◯ or ◯ to confirm
4. select desired keypad sensitivity using ◯ ◯

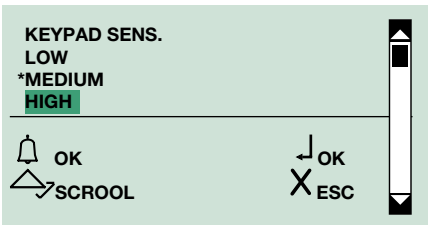

5. press ◯ or ◯ to confirm

» **indicates the selected keypad sensitivity setting*

13. Enabling/disabling the keypad tone

This function is enabled by default.

1. access programming mode
2. select the menu items:
   Setting ⇒ Keypad tone

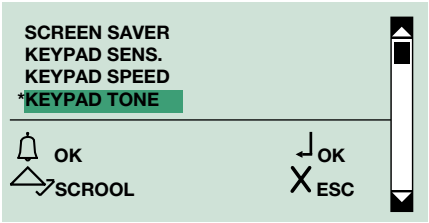

3. press (🔔) or (⊶) to confirm

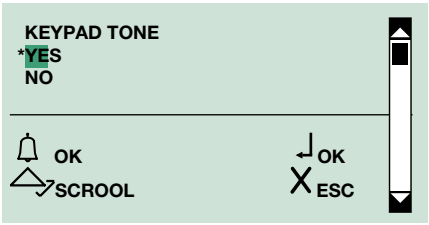

4. select **YES** to enable the function, **NO** to disable it
5. press (🔔) or (⊶) to confirm

» **indicates active selection*

14. Restoring the default values of the directory module

This function is used to restore the default settings:

Language = Italiano

Second language = disabled
Type of system = Simplebus
Call mode = standard
Welcome message = disabled
Screen saver = disabled
Type of download = disabled
RS485 address = 0
Keypad sensitivity = medium
Keypad speed = high
Keypad tone = disabled

1. access programming mode
2. select the menu items:
   Setting ⇒ **Default settings**

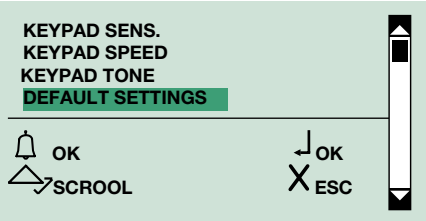

3. press (🔔) or (⊶) to confirm

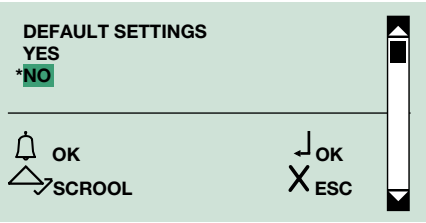

4. select **YES** to enable the function, **NO** to disable it
5. press (🔔) or (⊶) to confirm

» **indicates active selection*

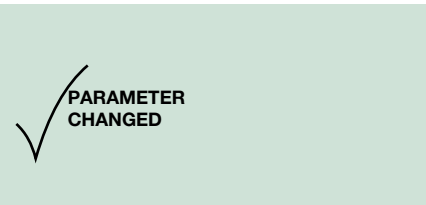

15. Changing the RS485 address of the porter module

1. access programming mode

2. select the menu items:
Setting ⇒ System parameters ⇒ RS485 address

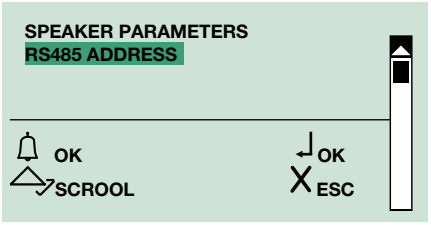

3. enter the RS485 address (max. 3 digits) using the alphanumeric keypad

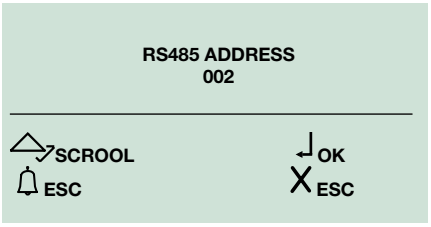

4. press (🔔) or (⊶) to confirm

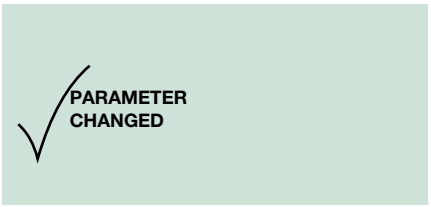

16. Viewing the number of names entered in the directory, the software version, the number of passwords entered and the ID code (RS485 address)

1. access programming mode
2. select the menu items:
   Info

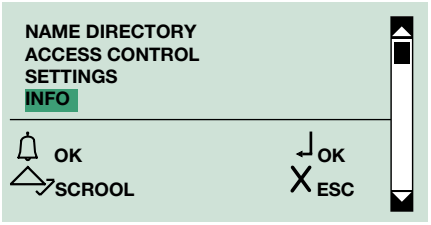

3. press (bell) or (key) to confirm
4. to display the information, scroll through the directory using (△) (▽)

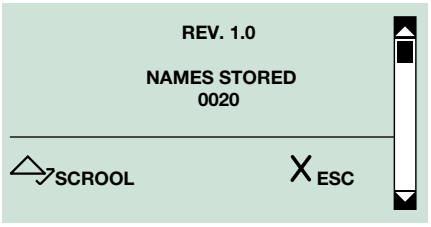

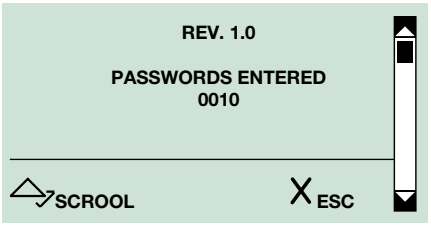

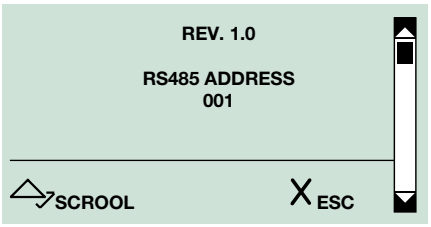

Standard settings of the porter module (Art. 1622, 1621, 4680C, 4681)

1. Setting the porter module parameters (audio time, door lock time, reset time)

AUDIO TIME= = 10 - 180 sec.

DOOR LOCK TIME= = 1- 8 sec.

RESET TIME= = 1 - 10 sec.

1. access programming mode
2. select the menu items:
   Setting ⇒ **System parameters** ⇒ **Speaker parameters**

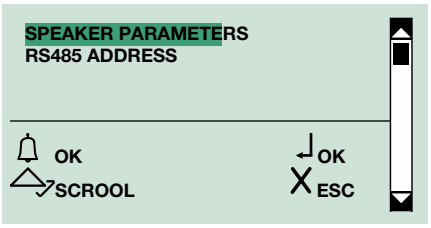

3. press 🔔 or ⊶ to confirm
4. v △ ▽

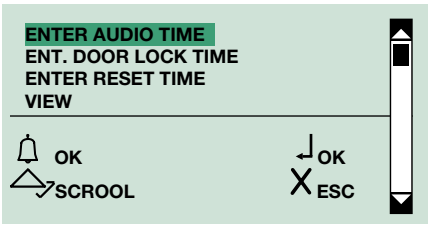

5. press 🔔 or ⊶ to confirm
6. enter the value using the alphanumerical keypad

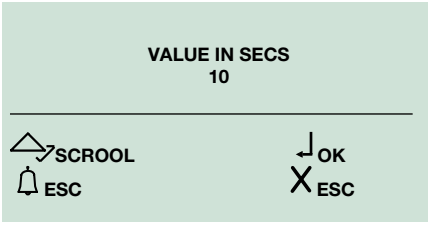

7. press ⊶ to confirm

» *confirmation tone*

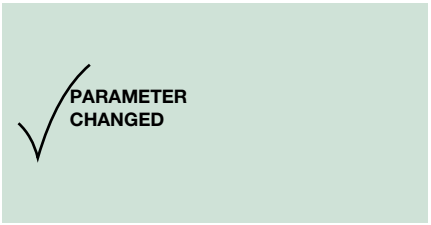

2. Viewing the porter module parameters (audio time, door lock time, reset time)

This function is only available on porter module versions 2.0 or higher.

1. access programming mode
2. select the menu items:
   Setting ⇒ **System parameters** ⇒ **Speaker parameters** ⇒ **View**

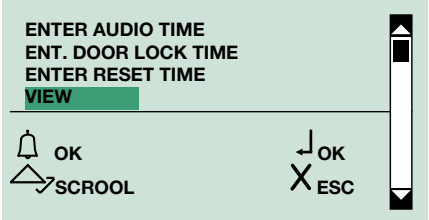

3. press 🔔 or 🔑 to confirm



Advanced settings of the porter module (Art. 1622, 1621, 4680C, 4681)

1. Lock on SE

1A Setting the type of door lock on the SE output of the porter module

The default lock type is in AC.

1. access programming mode
2. select the menu items:
   Setting ⇒ System parameters ⇒ Speaker parameters ⇒ Advanced options ⇒ Lock on SE ⇒ Type

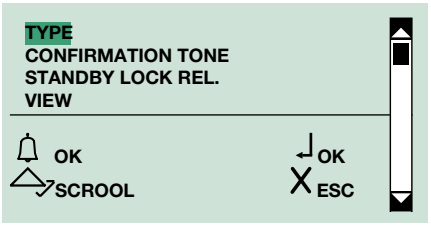

3. press 🔔 or 🔓 to confirm
4. select the type of lock using △ ▽

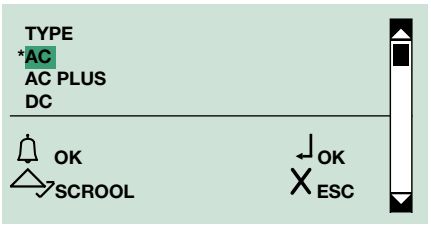

5. press 🔔 or 🔓 to confirm

» **indicates the selected lock type*

» *confirmation tone*

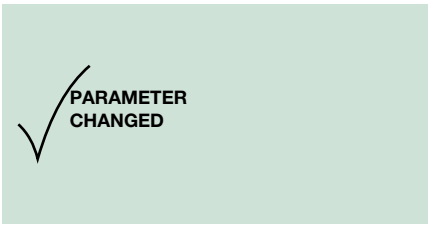

1B Enabling/disabling the door lock confirmation tone on the porter module

This function is disabled by default.

1. access programming mode
2. select the menu items:
   Setting ⇒ **System parameters** ⇒ **Speaker parameters** ⇒ **Advanced options** ⇒ **Lock on SE** ⇒ **Confirmation tone**

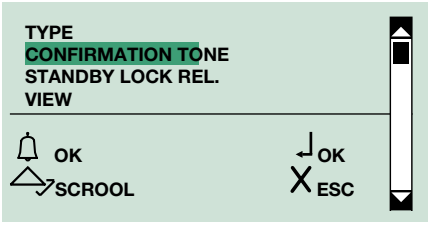

3. press (bell) or (key) to confirm

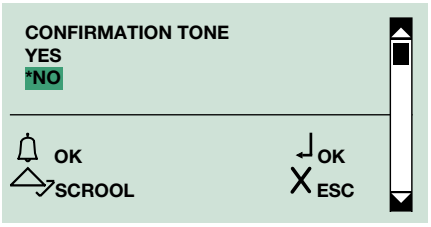

4. select **YES** t**o** enable the function, **NO** to d**is**able it
5. press (bell) or (key) to confirm

» **indicates active selection*

» *confirmation tone*

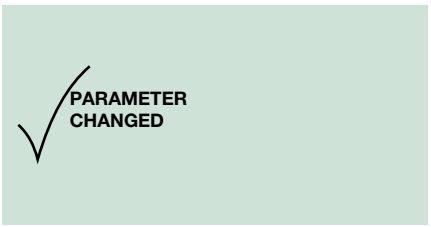

1C Enabling/disabling the standby lock release on the porter module

This function is disabled by default.

1. access programming mode
2. select the menu items:
   Setting ⇒ System parameters ⇒ Speaker parameters ⇒ Advanced options ⇒ Lock on SE ⇒ Standby lock rel.

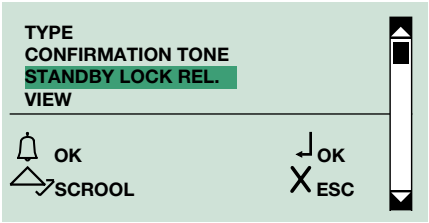

3. press (bell) or (key) to confirm

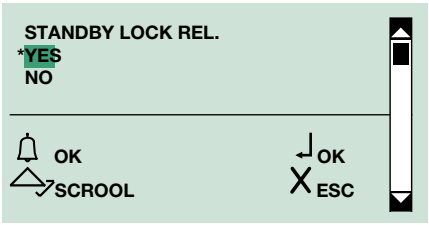

4. select **YES** to enable the function, **NO** to disable it
5. press (bell) or (key) to confirm

» **indicates active selection*

» *confirmation tone*

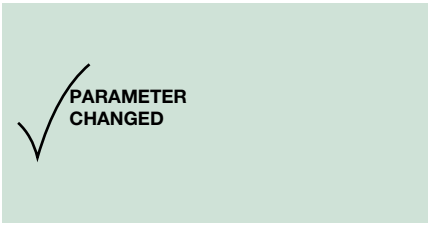

1D Viewing the parameters of the door lock on the SE output of the porter module

1. access programming mode
2. select the menu items:
   Setting ⇒ System parameters ⇒ Speaker parameters ⇒ Advanced options ⇒ Lock on SE ⇒ View

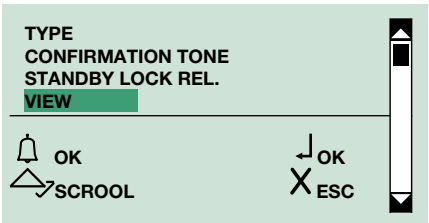

3. press (bell) or (key) to confirm

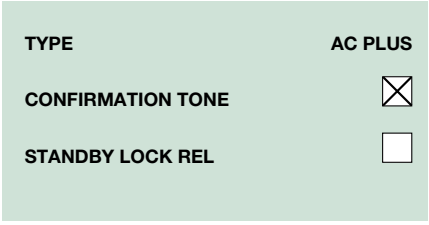

2. Relay contact

2A Enabling/disabling the actuator function on the relay contact

1. access programming mode
2. select the menu items:
   Setting ⇒ **System parameters** ⇒ **Speaker parameters** ⇒ **Advanced options** ⇒ **Relay contact** ⇒ **Actuator function**

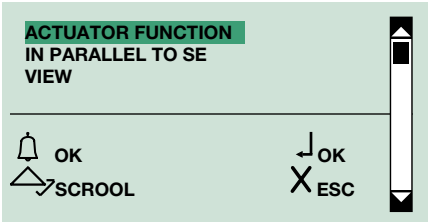

3. press or to confirm

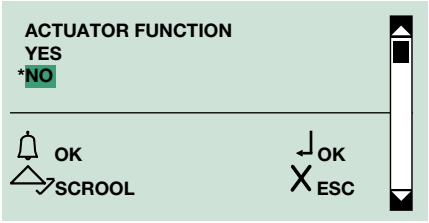

4. select **YES** t**o** enable the function, **NO** to d**is**able it
5. press or to confirm

» **indicates active selection*

» *confirmation tone*

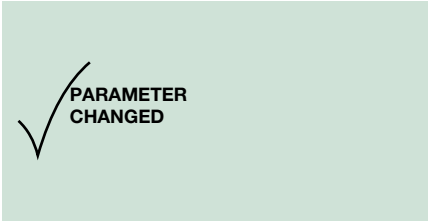

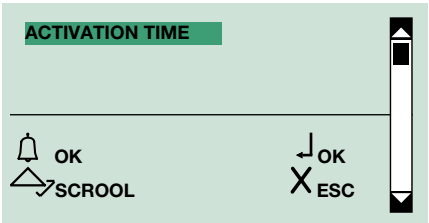

6. press or to confirm
7. enter the value using the alphanumerical keypad

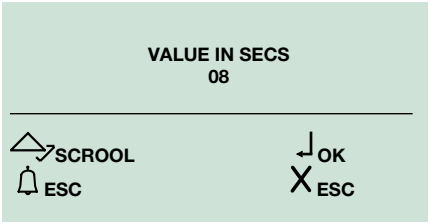

8. press to confirm

» *confirmation tone*

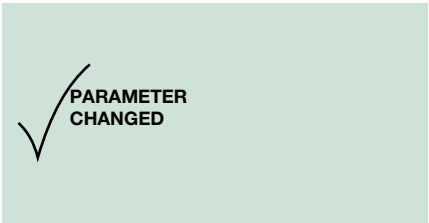

2B Enabling/disabling the relay contact in parallel to the porter module SE output

1. access programming mode
2. select the menu items:
   Setting ⇒ System parameters ⇒ Speaker parameters ⇒ Advanced options ⇒ Rele modulo porter ⇒ In parallelo a se

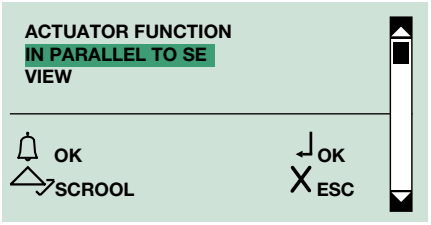

3. press ◯ or ◯ to confirm

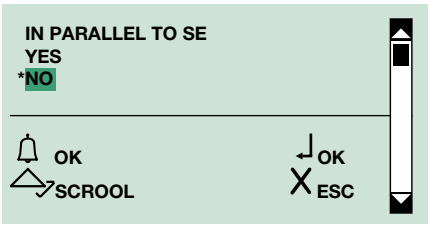

4. select YES t**o** enable the function, NO to d**is**able it
5. press ◯ or ◯ to confirm

» **indicates active selection*

» *confirmation tone*

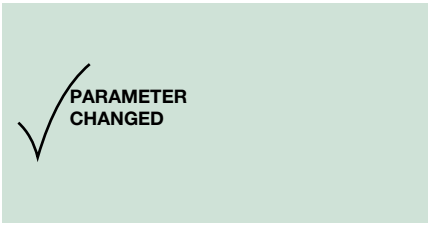

2C Viewing the relay contact parameters

1. access programming mode
2. select the menu items:
   Setting ⇒ System parameters ⇒ Speaker parameters ⇒ Advanced options ⇒ Relay contact ⇒ View

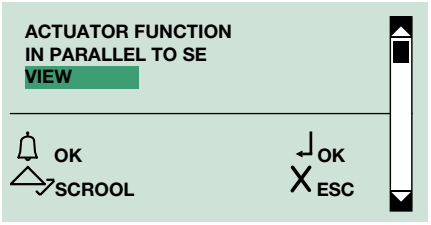

3. press ◯ or ◯ to confirm

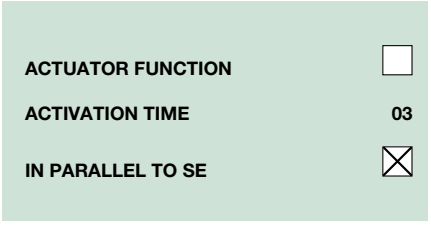

3. S serial

3A Enabling/disabling the actuator function on the S serial line

1. access programming mode
2. select the menu items:
   Setting ⇒ **System parameters** ⇒ **Speaker parameters** ⇒ **Advanced options** ⇒ **S serial** ⇒ **Actuator function**

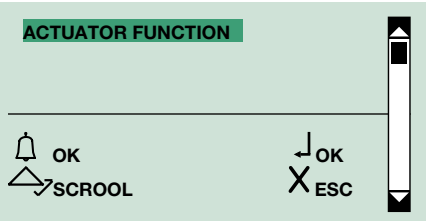

3. press or to confirm

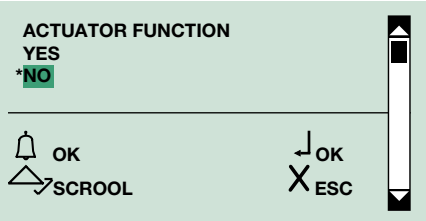

4. select **YES** t**o** enable the function, **NO** to d**is**able it
5. press or to confirm

» **indicates active selection*

» *confirmation tone*

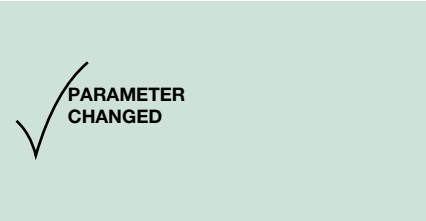

4. Voice messages

4A Enabling/disabling voice and visual messages on the porter module

1. access programming mode
2. select the menu items:
   Setting ⇒ System parameters ⇒ Speaker parameters ⇒ Advanced options ⇒ Voice messages

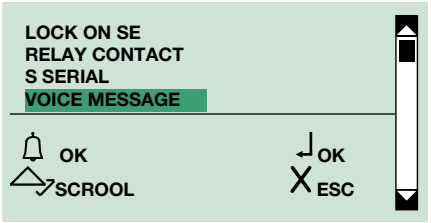

3. press 🔔 or ⊶ to confirm

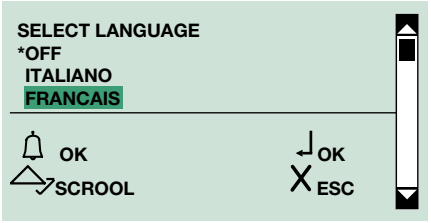

4. to display the language that you want to select, scroll through the list using △ ▽
5. press 🔔 or ⊶ to confirm

» **indicates language selected*

» *confirmation tone*

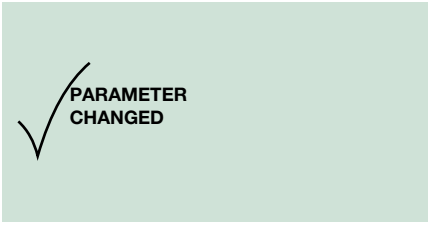

5. Call

5A Abilitare/disabilitare la chiamata tripla

This function is disabled by default.
It is possible to enable or disable the triple call made by Art. 3360B to the internal units.
The call will therefore take place on consecutive occasions (in the case of video calls: the first will be audio calls and the third will be a video call).

1. access programming mode
2. select the menu items:
   Setting ⇒ **System parameters** ⇒ **Speaker parameters** ⇒ **Advanced options** ⇒ **Call** ⇒ **Call tripla**

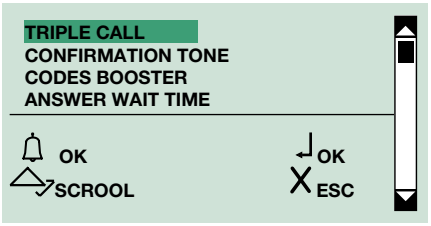

3. press (🔔) or (⊶) to confirm

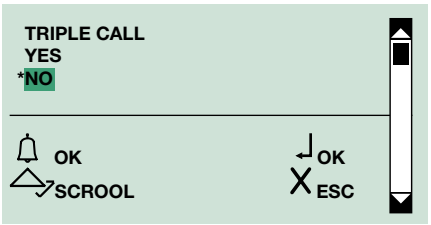

4. select **YES** t**o** enable the function, ***NO*** to d**is**able it
5. press (🔔) or (⊶) to confirm

» **indicates active selection*

» *confirmation tone*

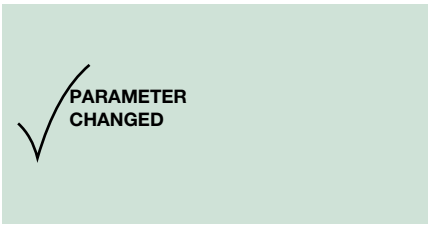

5B Enabling/disabling the call confirmation tone

This function is enabled by default.

1. **access programming mode**
2. select the menu items:
   Setting ⇒ System parameters ⇒ Speaker parameters ⇒ Advanced options ⇒ Call ⇒ Confirmation tone

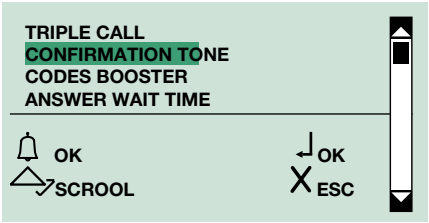

3. press (🔔) or (⊶) to confirm

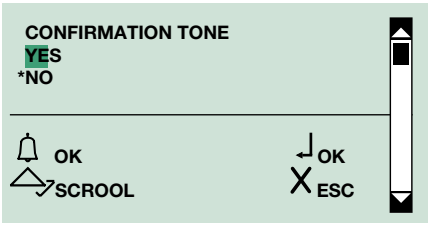

4. select **YES** t**o** enable the function, **NO** to d**is**able it
5. press (🔔) or (⊶) to confirm

» **indicates active selection*

» *confirmation tone*

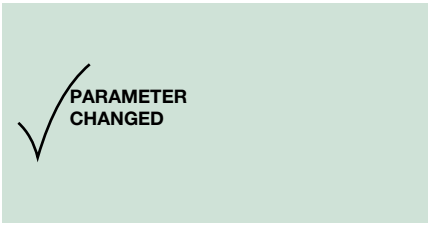

5C Enabling/disabling the call codes booster

This function is disabled by default.
Allows control of over 70 internal units connected to porter module.

1. **access programming mode**
2. select the menu items:
   Setting ⇒ **System parameters** ⇒ **Speaker parameters** ⇒ **Advanced options** ⇒ **Call** ⇒ **Codes booster**

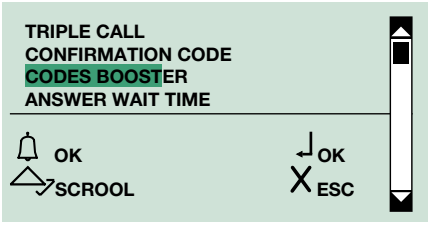

3. press (🔔) or (⊶) to confirm

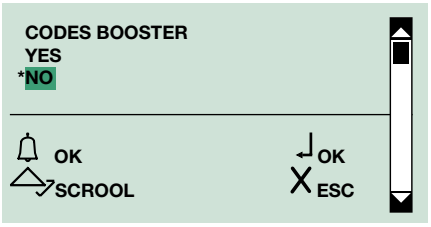

4. select **YES** to enable the function, **NO** to disable it
5. press (🔔) or (⊶) to confirm

» **indicates active selection*

» *confirmation tone*

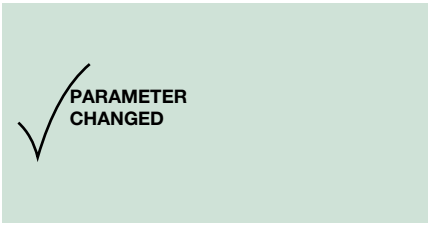

5D Setting the call answer wait time

1. access programming mode
2. select the menu items:
   Setting ⇒ System parameters ⇒ Speaker parameters ⇒ Advanced options ⇒ Call ⇒ Answer wait time

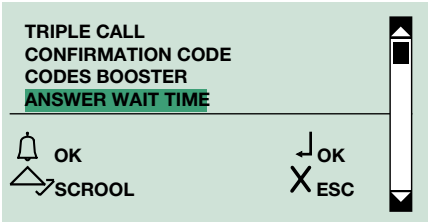

3. press (bell) or (key) to confirm
4. enter the value using the alphanumerical keypad

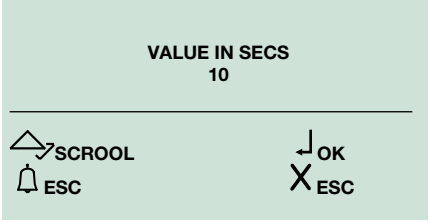

5. press (bell) to confirm

» *confirmation tone*



5E Viewing the porter module call parameters

1. access programming mode
2. select the menu items:
   Setting ⇒ System parameters ⇒ Speaker parameters ⇒ Advanced options ⇒ Call ⇒ View

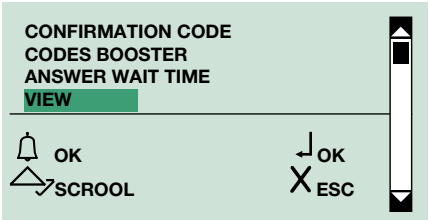

3. press (bell) or (key) to confirm

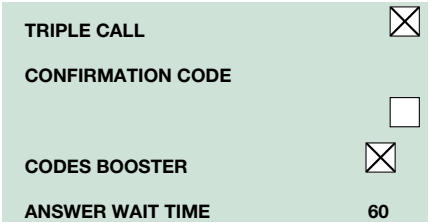

6. Self-ignition

6A Enabling/disabling self-ignition

This function is enabled by default.

1. access programming mode
2. select the menu items:
   Setting ⇒ **System parameters** ⇒ **Speaker parameters** ⇒ **Advanced options** ⇒ **Self-ignition**

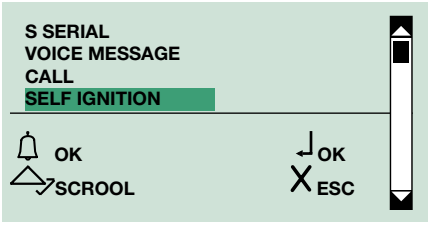

3. press (🔔) or (⊶) to confirm

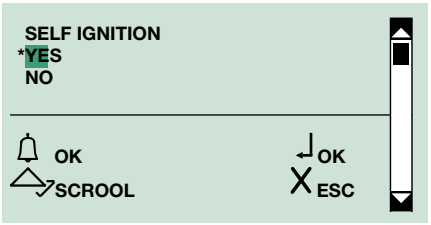

4. select **YES** to enable the function, **NO** to disable it
5. press (🔔) or (⊶) to confirm

» **indicates active selection*

» *confirmation tone*

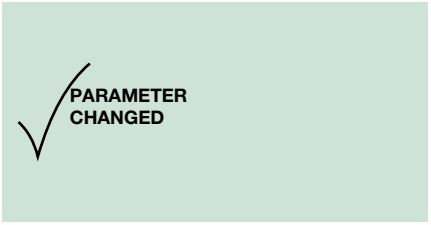

7. Ripristina default

This function is used to restore the default settings:

De-misting heating element = disabled
Audio-visual messages = disabled
Door lock command on SE in AC
Door lock time = 2 sec + tone disabled
C.NC.NO relay in parallel with SE
Lock release always enabled
Actuator function on S serial line = disabled
Answer wait time = 60 sec
Conversation time = 90 sec
Self-ignition = enabled
Confirmation tone on user call = enabled
Reset wait time = 10 sec
Send call = single
Control of internal units connected to porter module = up to 70
System mode = Simplebus

7A Restoring the default values of the porter module

This function is enabled by default.

1. **access programming mode**
2. select the menu items:
   Setting ⇒ System parameters ⇒ Speaker parameters ⇒ Advanced options ⇒ Default settings

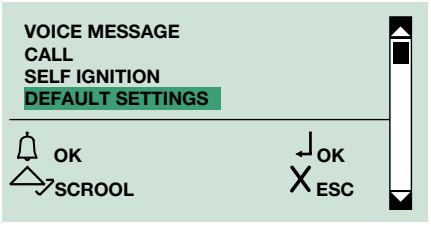

3. press or to confirm

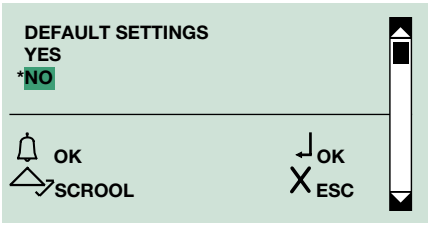

4. select **YES** to enable the function, **NO** to disable it
5. press or to confirm

» **indicates active selection*

» *confirmation tone*

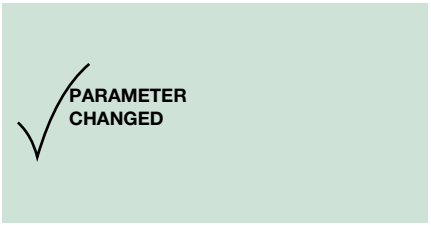

Software Art. 1249B

1. Installing the USB driver for connecting Art. 3360B to a PC

make sure that the option to install unsigned drivers (drivers that have not passed Windows Logo testing) is enabled.

1. connect the cable attached to Art. 1249B to the USB connector on the rear of the directory module
2. access programming mode
3. select the menu items:
   Setting ⇒ Type download ⇒ USB

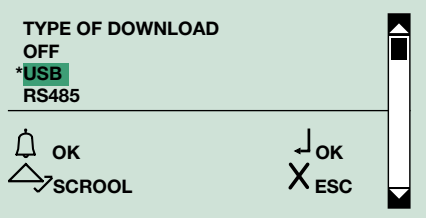

4. the messages "**Found new hardware Art. 3360B**" and "**New hardware installation wizard**" appear on the PC
5. follow the instructions of the installation wizard through to completion

select the Drivers folder located in the Art. 1249B installation folder.

2. Using the directory via software Art. 1249B

connection to the PC is via USB; ensure that the drivers have been installed

1. connect the cable attached to Art. 1249B to the USB connector on the rear of the directory module
2. access programming mode
3. select the menu items:
   Setting ⇒ Type download ⇒ USB

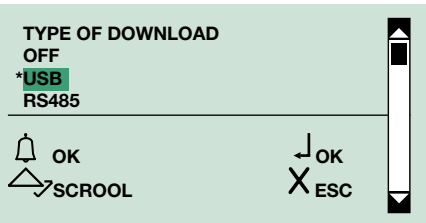

4. run software Art. 1249B
5. run the download procedure and wait until it is completed

the selected call mode must match the one configured on module Art. 3360B
make sure in "Parameters configuration" on Art. 1249B that the correct communication port is selected.

3. Multidownload

It is possible to use a RS485 network to connect multiple Art. 3360B to the same PC with software Art. 1249B installed. Each module must have a different ID CODE (**RS485 address**).

1. connect cables of RS485 serial line to terminals 485D+/485D- on Art. 3360B (**see diagram**).
2. **access programming mode**
3. select the menu items:
   Setting ⇒ **Type download** ⇒ **RS485**

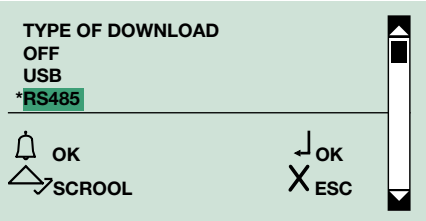

4. run software Art. 1249B
5. run the download procedure and wait until it is completed

the selected call mode must match the one configured on module Art. 3360B
make sure in "Parameters configuration" on Art. 1249B that the correct communication port is selected

Menu diagram

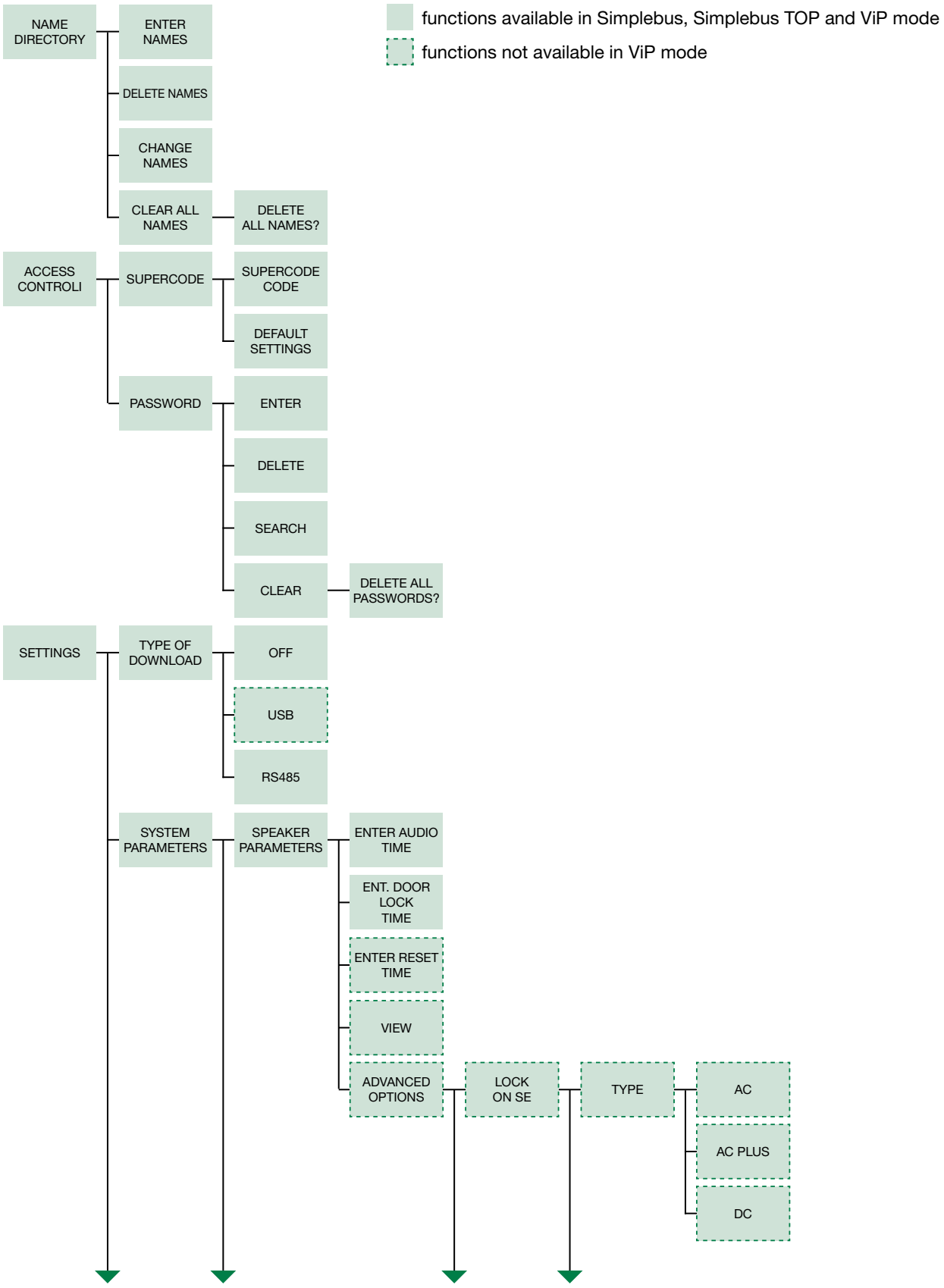

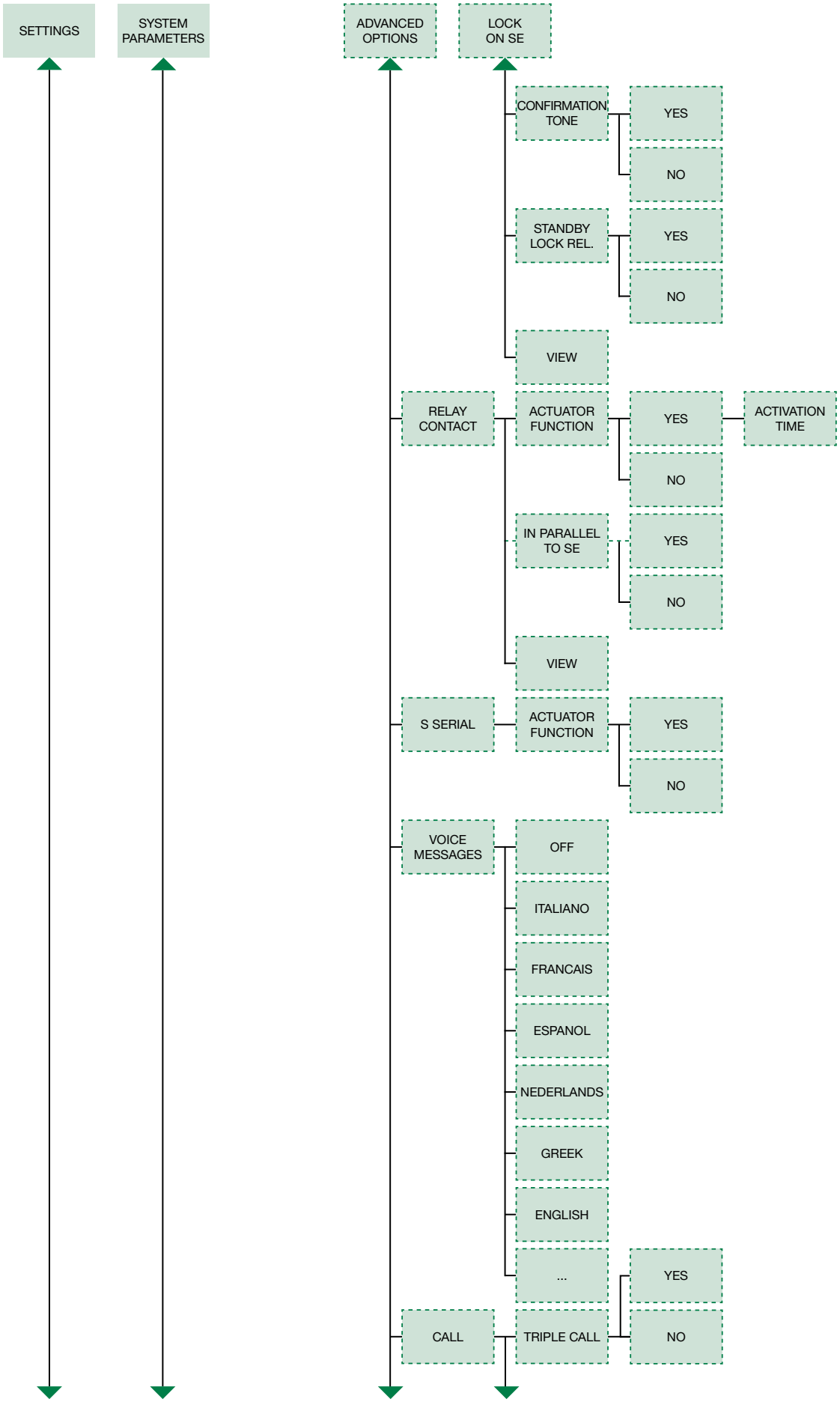
SETTINGS
SYSTEM PARAMETERS
ADVANCED OPTIONS
LOCK ON SE
CONFIRMATION TONE
YES
NO
STANDBY LOCK REL.
YES
NO
VIEW
RELAY CONTACT
ACTUATOR FUNCTION
YES
ACTIVATION TIME
NO
IN PARALLEL TO SE
YES
NO
VIEW
S SERIAL
ACTUATOR FUNCTION
YES
NO
VOICE MESSAGES
OFF
ITALIANO
FRANCAIS
ESPANOL
NEDERLANDS
GREEK
ENGLISH
...
YES
CALL
TRIPLE CALL
NO

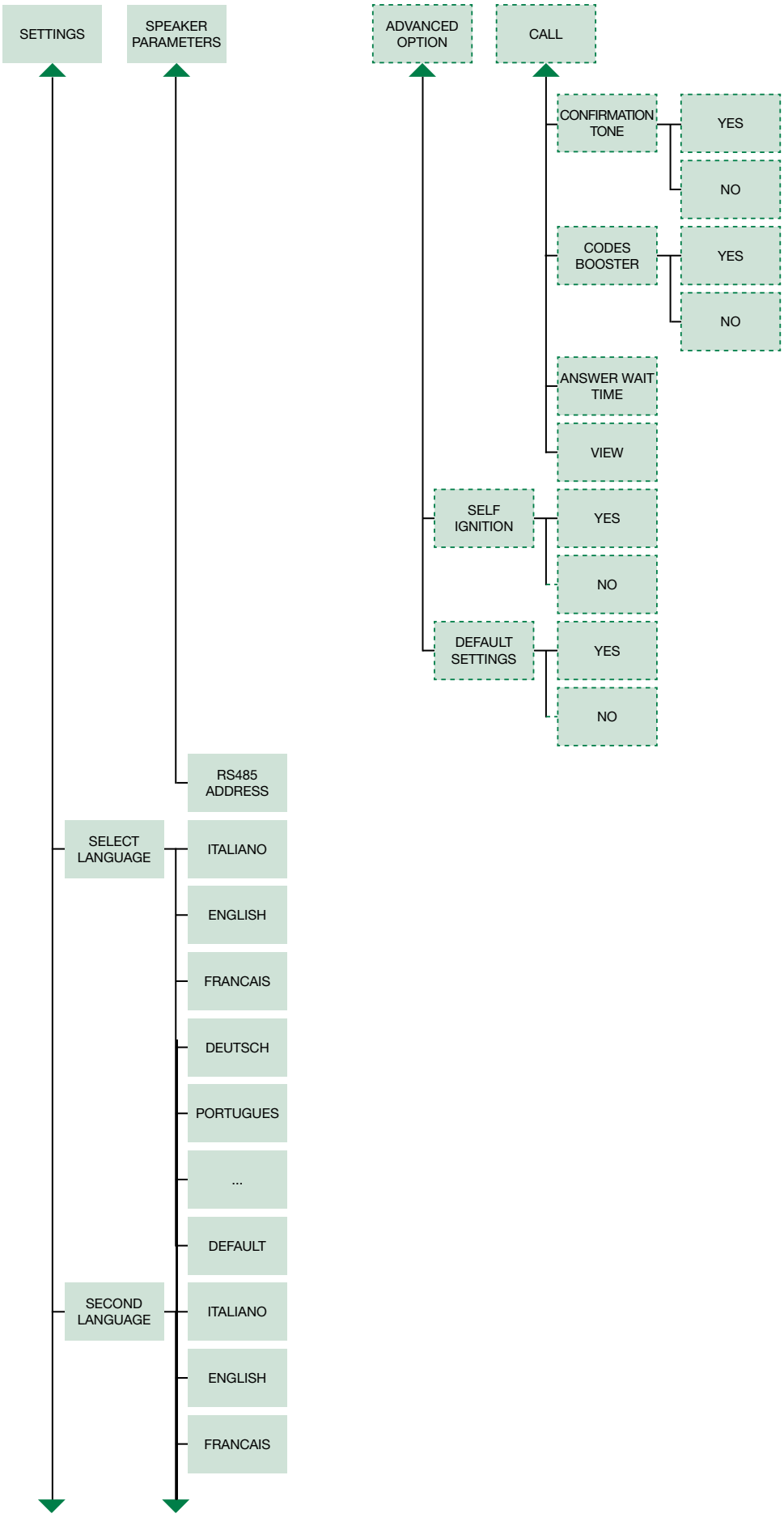
SETTINGS
SPEAKER PARAMETERS
ADVANCED OPTION
CALL
CONFIRMATION TONE
YES
NO
CODES BOOSTER
YES
NO
ANSWER WAIT TIME
VIEW
SELF IGNITION
YES
NO
DEFAULT SETTINGS
YES
NO
RS485 ADDRESS
SELECT LANGUAGE
ITALIANO
ENGLISH
FRANCAIS
DEUTSCH
PORTUGUES
...
DEFAULT
SECOND LANGUAGE
ITALIANO
ENGLISH
FRANCAIS

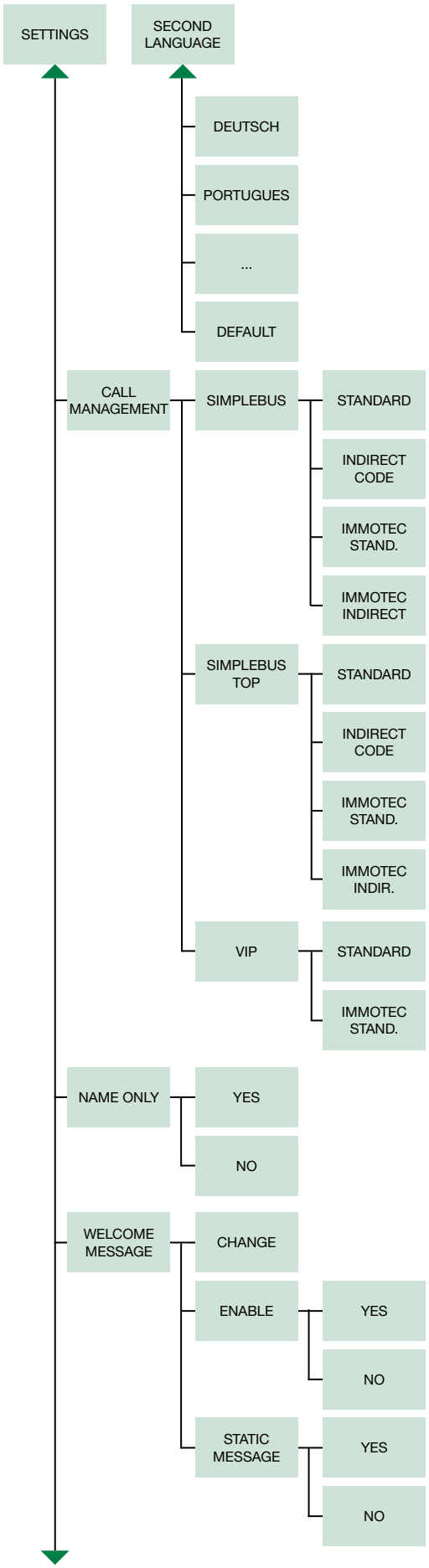
SETTINGS
SECOND LANGUAGE
DEUTSCH
PORTUGUES
...
DEFAULT
CALL MANAGEMENT
SIMPLEBUS
STANDARD
INDIRECT CODE
IMMOTEC STAND.
IMMOTEC INDIRECT
SIMPLEBUS TOP
STANDARD
INDIRECT CODE
IMMOTEC STAND.
IMMOTEC INDIR.
VIP
STANDARD
IMMOTEC STAND.
NAME ONLY
YES
NO
WELCOME MESSAGE
CHANGE
ENABLE
YES
NO
STATIC MESSAGE
YES
NO

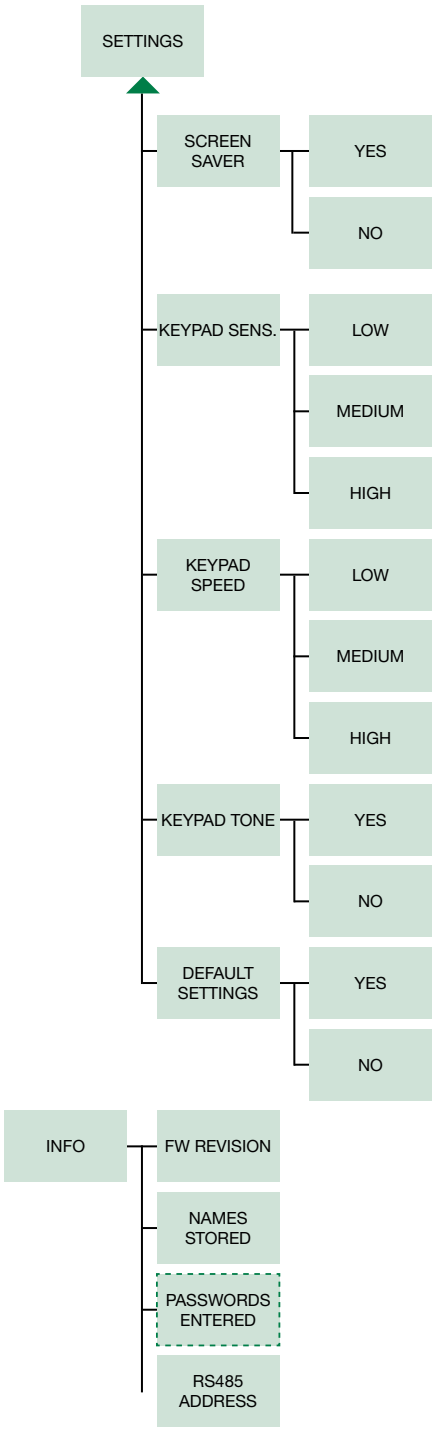

Table of Simplebus Top products	8 023903 181142 CE 005M2008A5000031 **IR.**
Door-entry phones	Art. 2608 IR. 006 / Art. 2610 IR. 008 / Art. 2619 IR. 000 / Art. 2628 IR. 005 / Art. 2638 IR. 006
Switching devices	Art. 1424 IR. 002
Mixers	Art. 4888C IR. 013
Switchboards	Art. 1998A IR. 006 / Art. 1998V IR. 001 / Art. 1998VC IR. 001

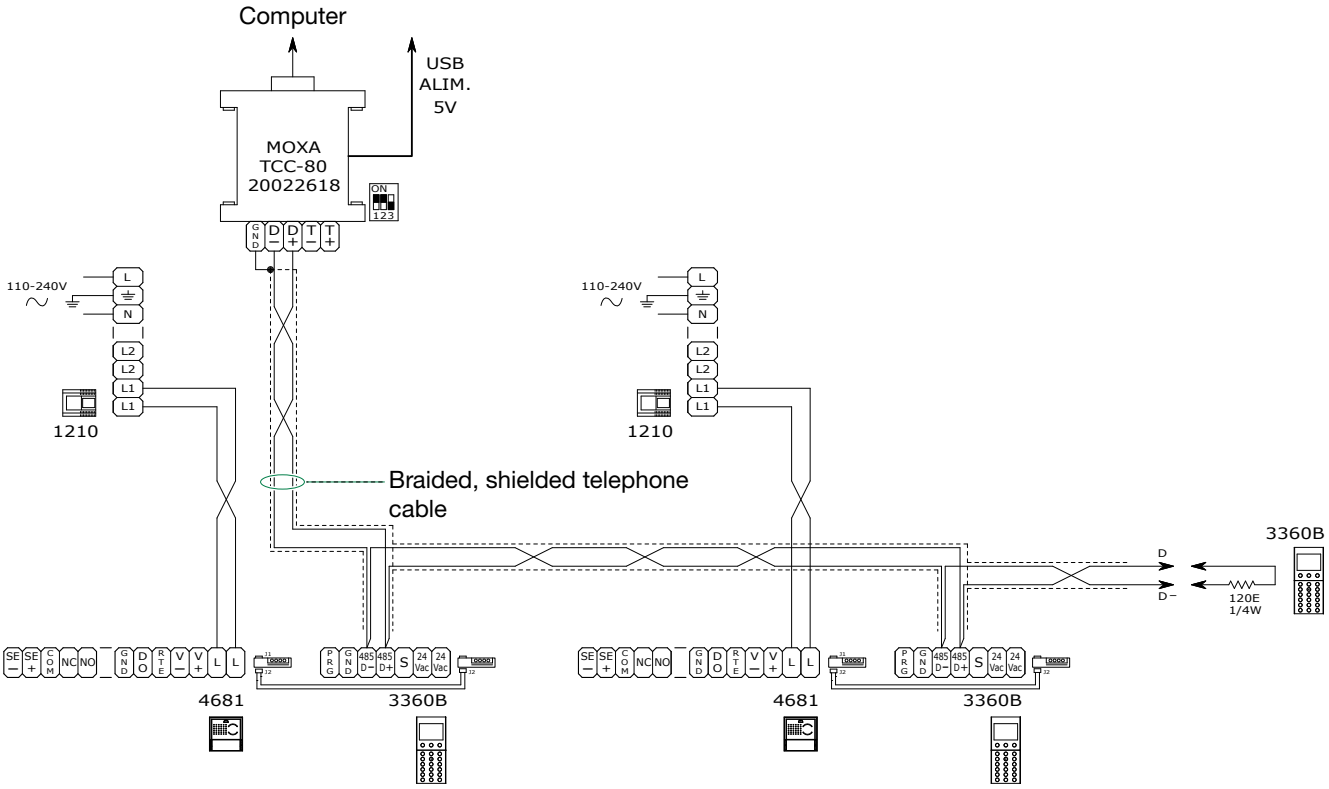

CAUTION:

- It is possible to use up to 5 terminals Art. 3360B
- Maximum distance between Art. 20022618 and furthest terminal Art. 3360B: 100 m

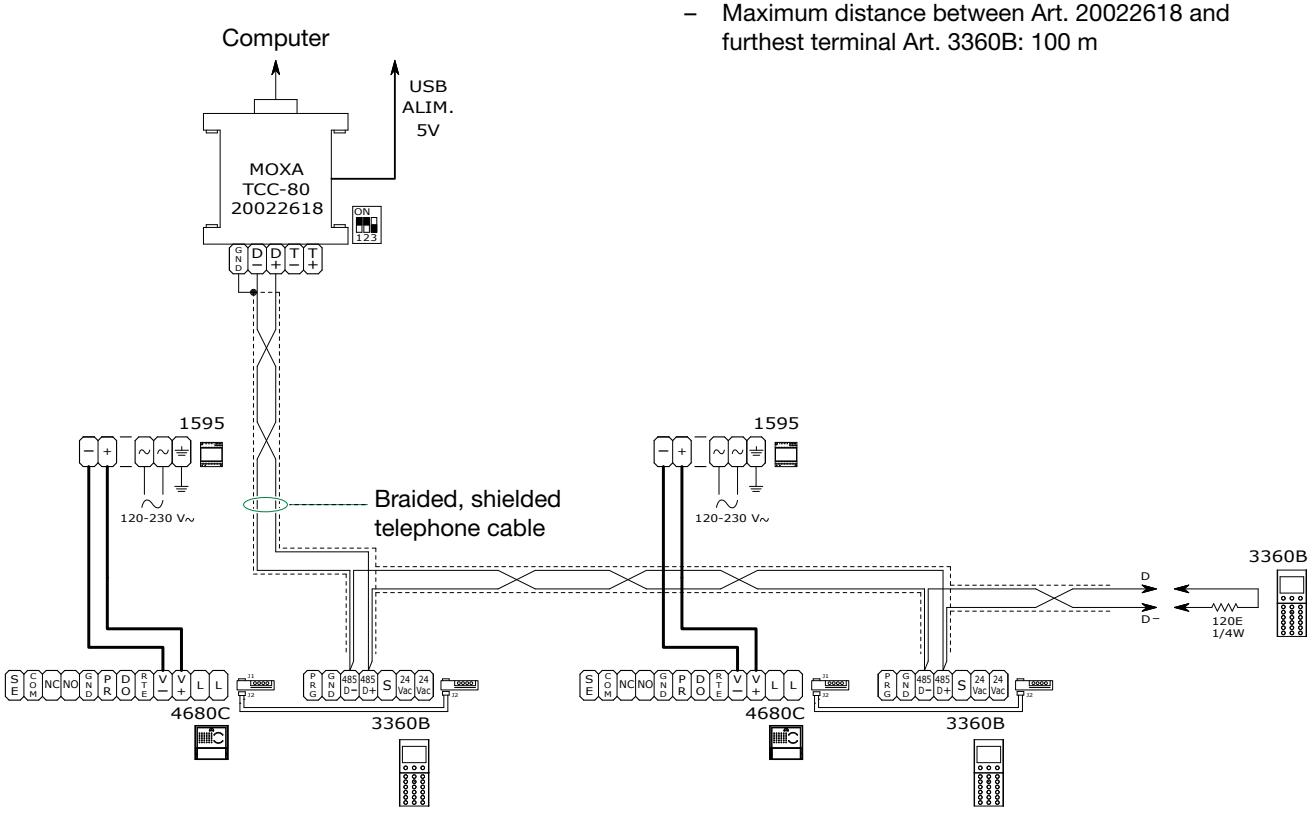

Table of contents

Warning

Description 433

Technical features 436

Installation 436

Connecting modules Art. 3262S/1 and Art. 3262S/2 437

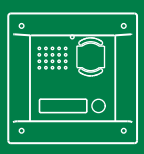

Vandalcom modular entrance panel

Description

Vandalcom is the anti-vandal stainless steel entrance panel designed to withstand even the most violent acts of vandalism. The frame is available in 2 colours (steel grey and dark grey), for analogue and digital versions. Boxes are made using 1.5 mm thick galvanised aluminium, impact-proof modules created using 2 thick stainless steel plates, stainless steel short stroke buttons - not recessed but flush with the plate - and special armoured screws: every detail has been specifically designed to withstand violent acts of vandalism. The product is certified as IK10.

Example flush-mount installation of 2 modules		1 Module	2 Modules	3 Modules
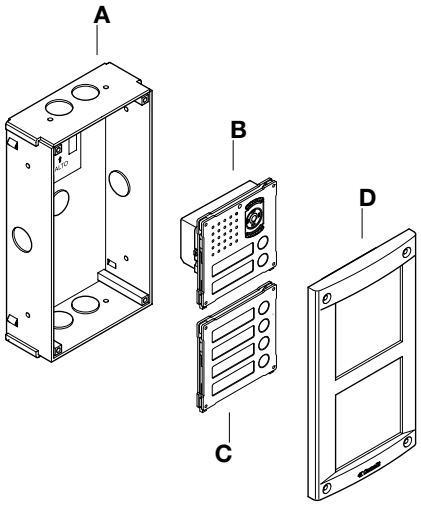 A = Flush-mount box B = Audio/Video module C = Button module D = Module holder/finishing frame	Flush-mount box	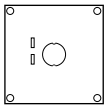 3160/1	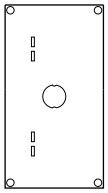 3160/2	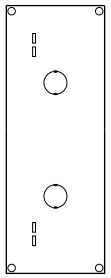 3160/3
	Module holder/finishing frame	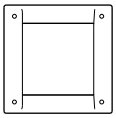 3161/1 3161/1A	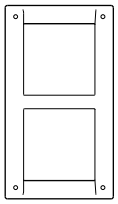 3161/2 3161/2A	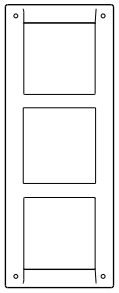 3161/3 3161/3A

Example surface-mount installation of 2 modules		1 Module	2 Modules	3 Modules
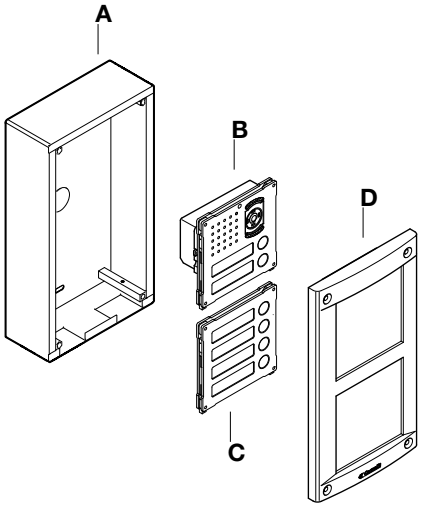 A = Surface-mount housing B = Audio/Video module C = Button module D = Module holder/finishing frame	Surface-mount housing	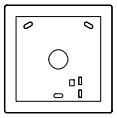 3159/1	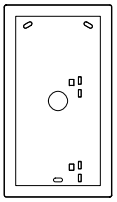 3159/2	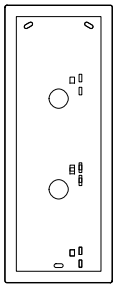 3159/3
	Module holder/finishing frame	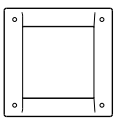 3161/1 3161/1A	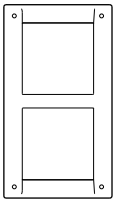 3161/2 3161/2A	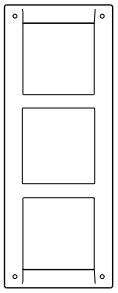 3161/3 3161/3A

Vandalcom modules			
Audio	**Video**	**Buttons**	**Various modules**
 3262S/0	 3268S/0	 3064S	 3070S
 3262S/1	 3268S/1		 3072S
 3262S/2	 3268S/2		 3176S
			 3186S
			 3188SB
			 3179S

VANDALCOM COMPOSITION TABLE

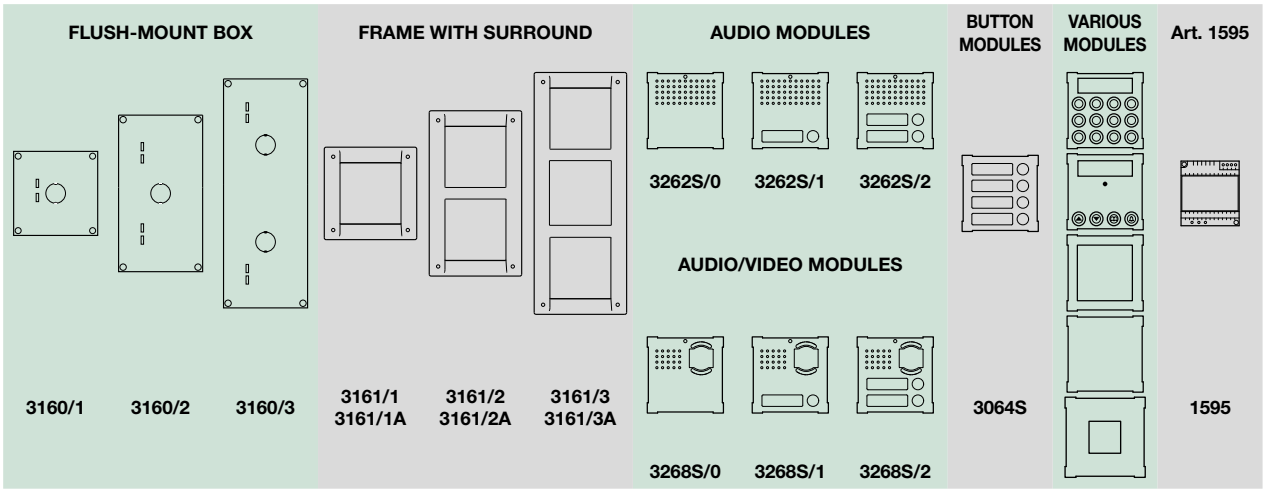

Users

1	1			1				1				
2	1			1					1			
3-4		1			1		1			1		
5		1			1			1		1		
6		1			1				1	1		
7-8			1			1	1			2		
9			1			1		1		2		
10			1			1			1	2		
11-12		2			2		1			3		
13-14		2			2				1	3		
15-16			2			2	1			4	1	
17-18			2			2			1	4	1	
19-20			2			2	1			5		
21-22			2			2			1	5		
23-24			3			3	1			6	2	1
25-26			3			3			1	6	2	1
27-28			3			3	1			7	1	1
29-30			3			3			1	7	1	1
31-32			3			3	1			8		1
33-34			3			3			1	8		1
35-36			4			4	1			9	2	1
37-38			4			4			1	9	2	1
39-40			4			4	1			10	1	1
41-42			4			4			1	10	1	1
43-44			4			4	1			11		1
45-46			4			4			1	11		1

Technical features

MAIN FEATURES	
Compatible with the audio unit	1622, 1622VC, 1682, 1682HVC, 1621, 1621VC
Compatible with the audio/video unit	4680C, 4682HC, 4682HD 4681
Type	Modular entrance panel
Material	Stainless steel
Audio systems	Yes
Audio/Video systems	Yes
Flush-mounted installation	Yes
Rain shield (optional)	Yes
Call with buttons	Yes
Total buttons	100
Digital call	Yes
Operating temperature (°C)	55
IP protection rating	IP54
Anti-vandal protection rating (IK code)	IK10

COMPATIBILITY	
SimpleBus Top audio/video system	Yes
ViP system	Yes
Building Kit audio/video system	Yes

Installation

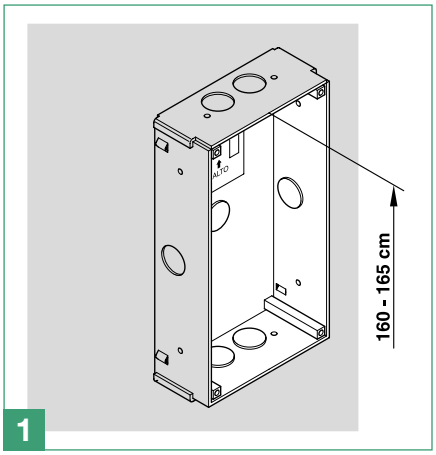

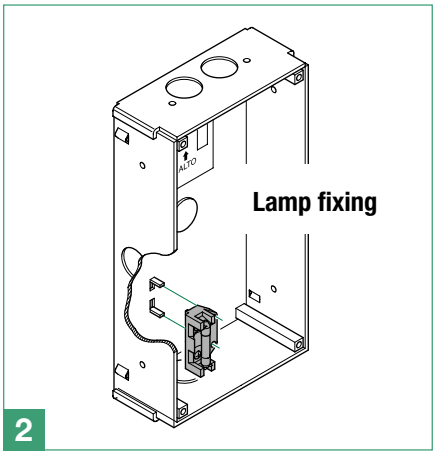

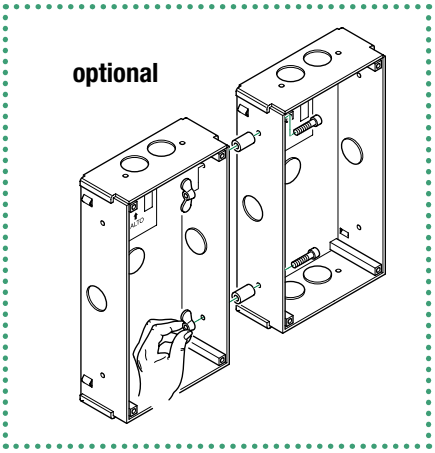

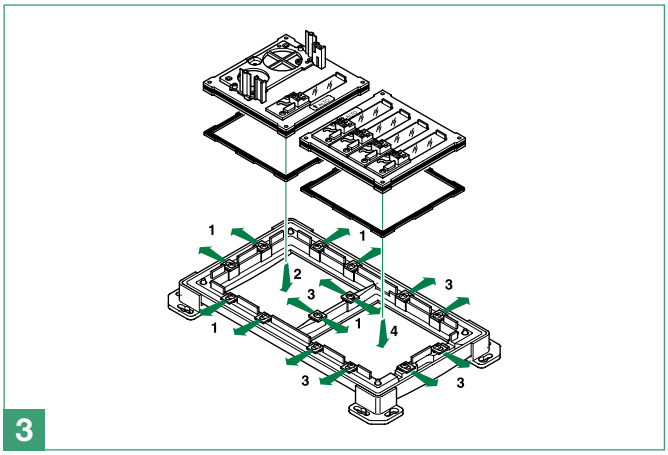

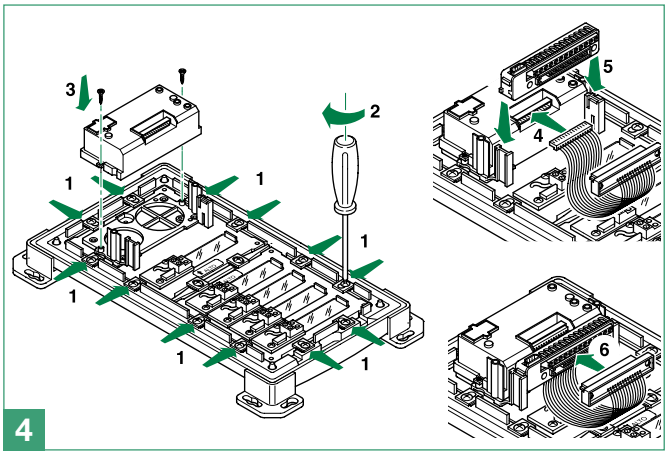

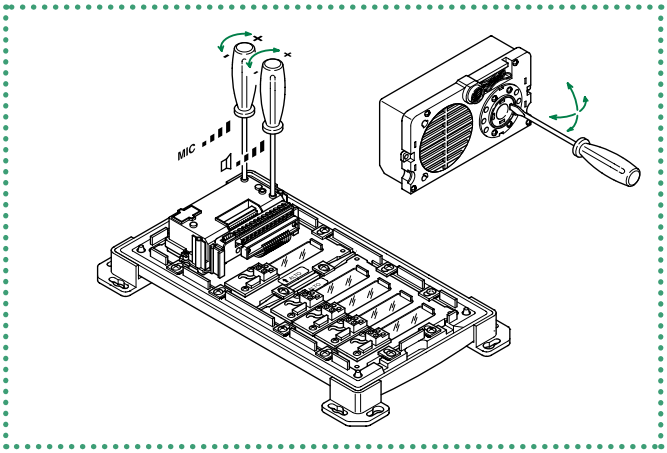

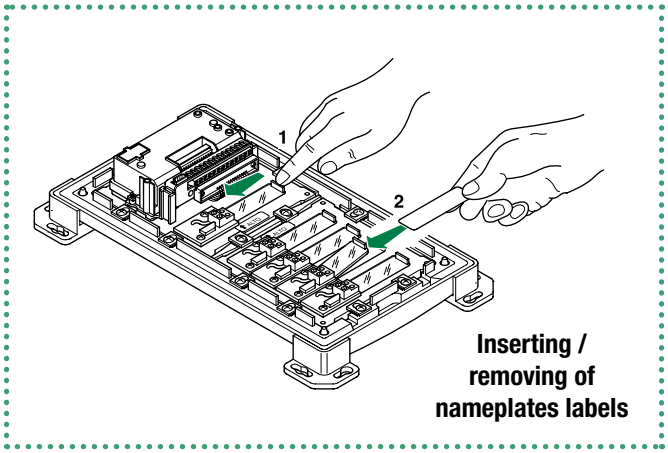

Inserting / removing of nameplates labels

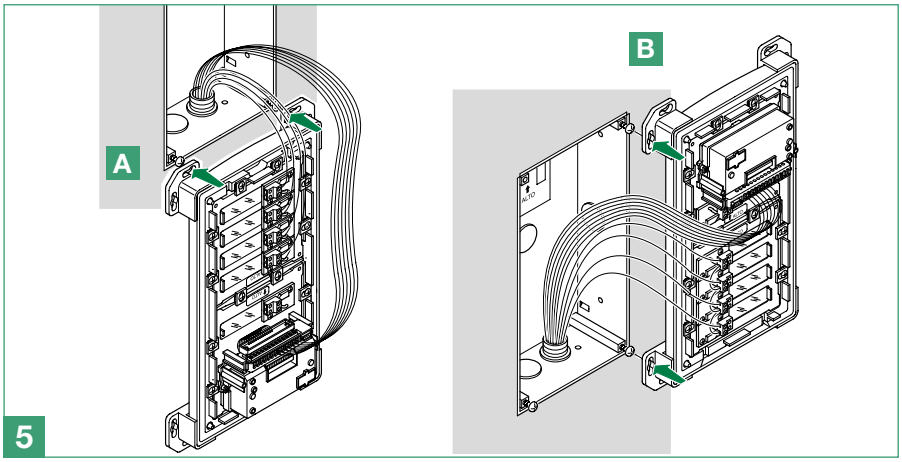

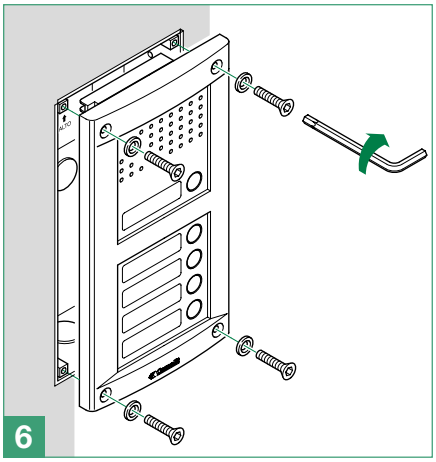

Connecting modules Art. 3262S/1 and Art. 3262S/2

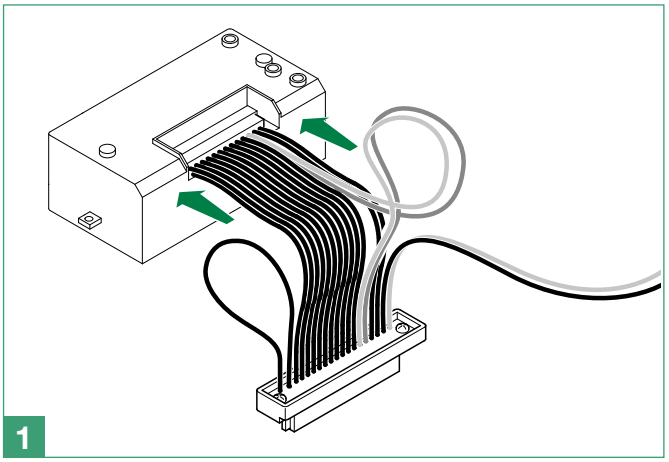

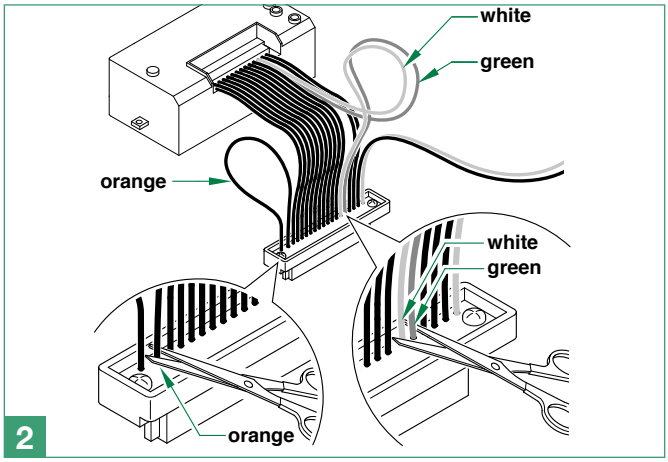

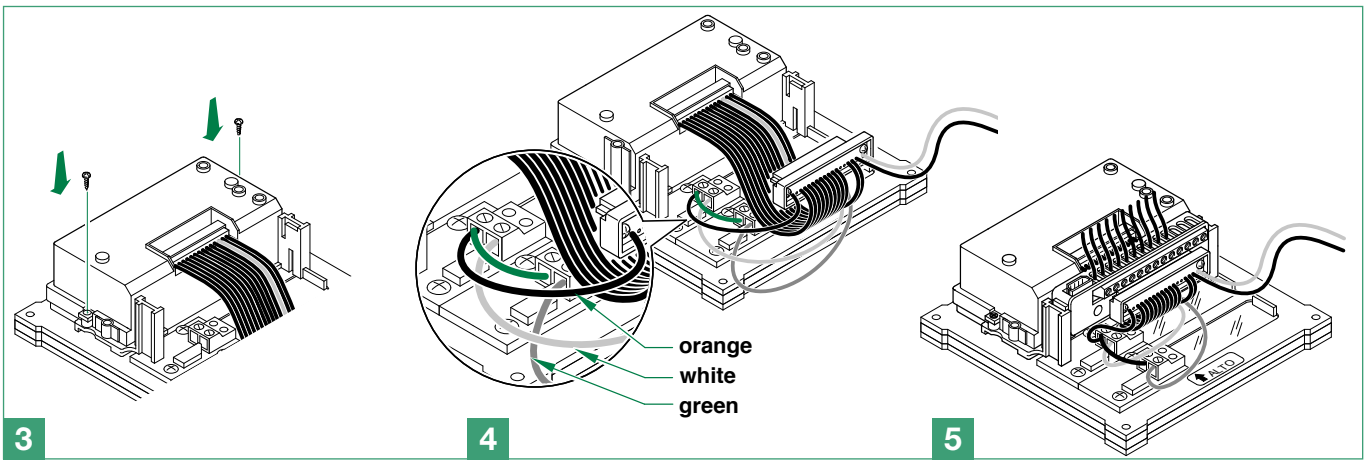

Table of contents

Warning

Description **439**

Technical features **440**

Connections **441**

- **Connection to earth of 3070S** **441**
- **Connection to computer** **441**
- **Connection in Building Kit and SB2 systems** **442**
- **Connection in SBTOP and SB1 systems** **442**

Program and Operation **443**

- **Navigation mode** **443**
- **Self-testing** **444**
  - Call mode testing 444
  - Setting the language 445
- **Using the digital module** **445**
  - Calling a user 445
  - Ending a call/conversation 446
  - Opening the door by entering the password code 446
- **Accessing/exiting the configuration stage** **447**
- **1. Settings** **448**
  - 1.1. System parameters 448
    - 1.1.1. Speaker parameters 448
    - 1.1.2. Download type **[NO VIP]** **449**
    - 1.1.3. Call mode 450
    - 1.1.4. RS485 address **[NO VIP]** **452**
  - 1.2. Language 452
  - 1.3. Default settings 453
- **2. Access control** **454**
  - 2.1. Supercode 454
    - 2.1.1. Change 454
    - 2.1.2. Default settings 454
  - 2.2. Password 455
    - 2.2.1. Enter 455
    - 2.2.2. Delete 455
    - 2.2.3. Delete all 456
- **3. Info** **456**
- **Data management using 1249B [NO VIP]** **457**
  - Entering a list (download) 457
  - Reading (upload) of the stored list 457
- **Navigation tree** **458**

System performance and layouts **459**



Digital call module Art. 3070S

Description

Vandalcom series digital call module made using double 2.5 mm 316 stainless steel plate, complete with 12-button backlit keypad plus 16-character alphanumerical display for showing call codes and interactive user messages (engaged, etc.). Also functions as an electronic key code device with a possible 1000 different 6-digit codes. For use in Building kit, SBTOP, SB1 audio, SB2 audio and ViP systems.

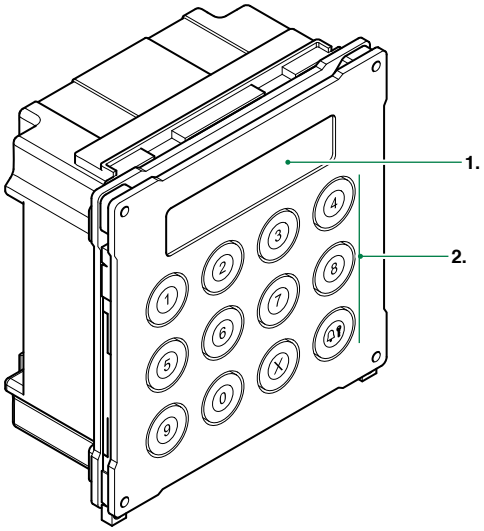

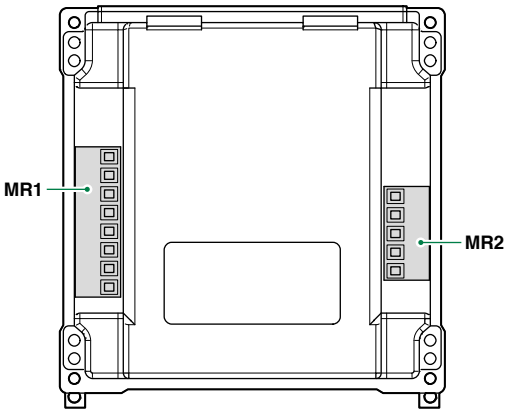

1. LCD screen

2. Alphanumeric keys

Terminal block for **MR1** connection

V+ V- DC power supply
12~ 12~ AC power supply
S serial port
- reference negative
PR programming input
- reference negative

Terminal block for **MR2** connection

D+ RS485 connection
D- RS485 connection
- reference negative
RX RS232 connection
TX RS232 connection

Technical features

MAIN FEATURES	
Backlighting color	Green led
Vandal Resistant rating (IK code)	Yes
Product height (mm)	106
Product width (mm)	106
Product depth (mm)	56
Operating temperature (°C)	-25 ÷ +55
Maximum current absorption (mA)	100
SOFTWARE/FIRMWARE SPECIFICATIONS	
No. user codes	1000
FUNCTIONS	
Key button function	Yes
HARDWARE SPECIFICATIONS	
Total buttons	12
COMPATIBILITY	
Simplebus Top audio/video system	Yes
Building Kit audio/video system	Yes
Simplebus 2 audio system	Yes
Simplebus 1 audio system	Yes
Vip system	Yes
MOUNTING/INSTALLATION	
Flush-mounted	Yes
Wall-mounted	Yes
AUDIO/VIDEO FEATURES	
Display resolution (H x V)	16x2 characters
CONNECTIVITY	
Type of connections/ports	RS232, RS485
RS232 ports	1
RS485 ports	1

Connections

Connection to earth of 3070S

To prevent any interference caused by electrostatic discharges, it is advisable to screen the casing as shown in the diagram

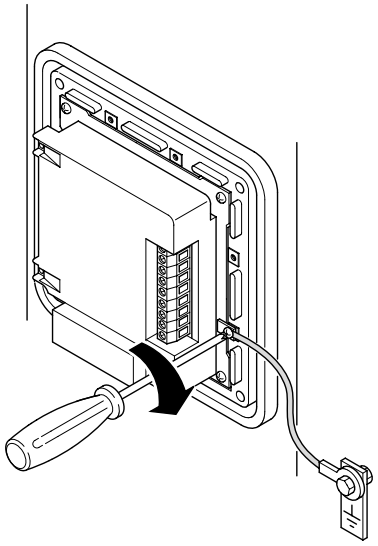

Connection to computer

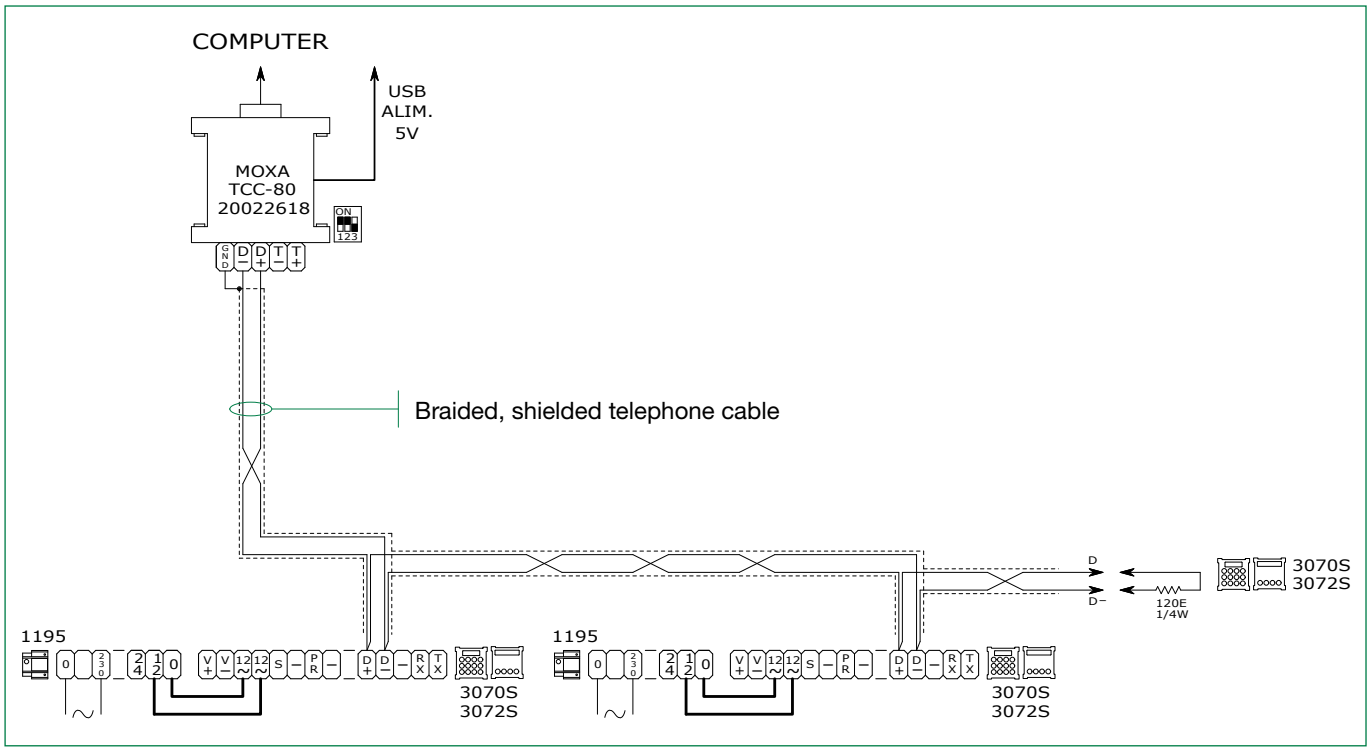

It is possible to use up to 5 terminals Art. 3070S-3072S

Maximum distance between l'Art. 20022618 and furthest terminal Art. 3070S-3072S: 100m

Connection in Building Kit and SB2 systems

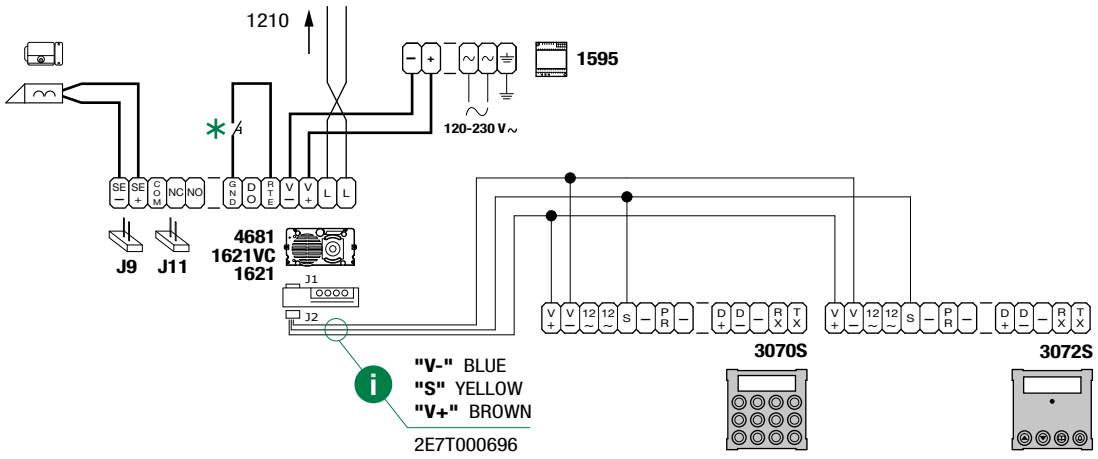

Use the cable 2E7T000696 supplied with Art. 3070S and Art. 3072S

* Local lock-release button.

Connection in SBTOP and SB1 systems

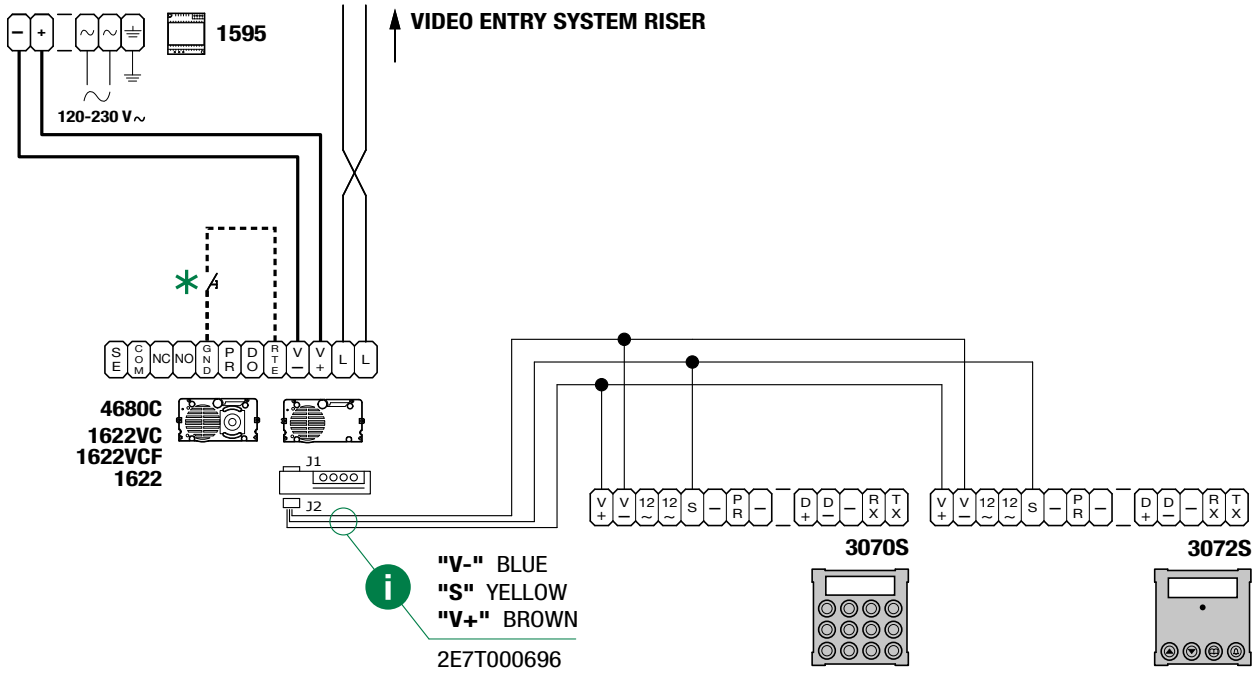

Use the cable 2E7T000696 supplied with Art. 3070S and Art. 3072S.

* Local lock-release button.

Program and Operation

The Comelit digital call module Art. 3070S can be used in Building kit, SBTOP, SB1 audio, SB2 audio and ViP systems, and is fitted with a numeric keypad to call door-entry phone users by entering the code which identifies them.

The main characteristics are as follows:

- Memory capacity for Simplebus systems: 1000 directory entries of 16 numeric characters.
- 32-character numeric display.
- Option of changing the parameters: Door lock time, Audio time and Reset time for the speaker module (reset time adjustment is not available in VIP mode).
- ACCESS CONTROL function for opening the door by keying in a pre-recorded password code.
- 5 call management modes (see **"1.1.3. Call mode"**):
  - Standard Simplebus (default),
  - Simplebus Indirect code,
  - Simplebus Top,
  - Simplebus Top Indirect code.
  - VIP
- Entering the list of users (Download) via connection to PC equipped with software Art. 1249B.
- Entering the list of users via connection with the PC can be performed over an RS232 line or over an RS485 line by means of the interface card Art. 20022618 (see **"Connection to computer"**).
- Reading (Upload) the list of users stored on the directory module via connection to PC equipped with software Art. 1249B.
- Option of displaying graphics interface messages in one of 12 available languages (Italian, English, French, German, Portuguese, Danish, Finnish, Dutch, Spanish, Swedish, Polish and Norwegian).
- Welcome message management (only available in VIP mode and programmable via VIP Manager) **[NOT SIMPLEBUS, NOT SIMPLEBUS TOP]**
- Screensaver (only available in VIP mode and programmable via VIP Manager) **[NOT SIMPLEBUS, NOT SIMPLEBUS TOP]**

Navigation mode

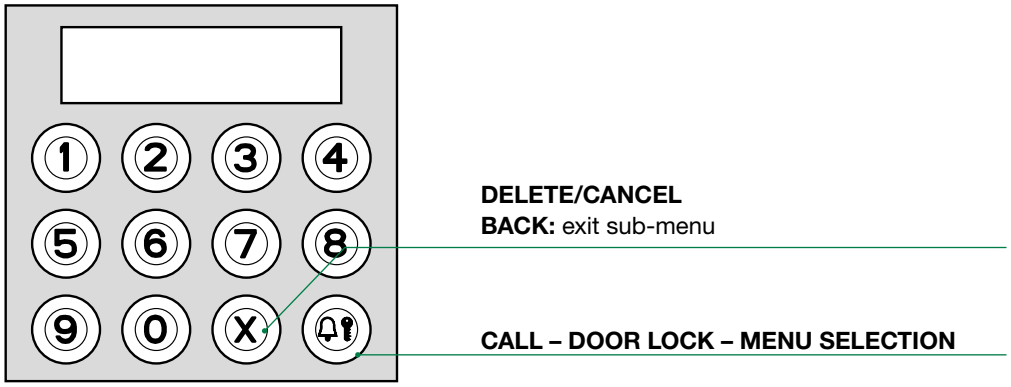

✓ Access to the configuration stage has been carried out (see **"Accessing/exiting the configuration stage"**).

» The menus are scrolled through automatically every 2 seconds.

▶ Press 🔔🔑 to confirm the selection.

▶ Press X to return to the menu level above.

EXAMPLE: Accessing "language" parameter modification

▶ access configuration mode (see **"Accessing/exiting the configuration stage"z**).

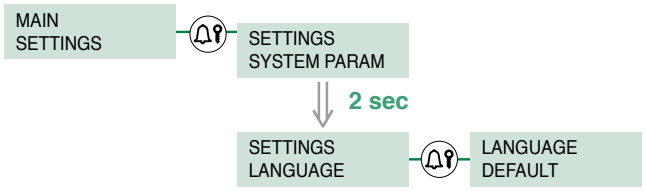

A new parameter is entered by scrolling through the possible values using the number keys.

1. Press the number corresponding to the desired value (in the example 0 = Italian).
   » *after 2 sec. the parameter corresponding to the entered number appears on screen.*
2. Press 🔔 to confirm the parameter.
   - ▶ Press another number to change your selection.
   - ▶ Press X to return to the menu level above.

EXAMPLE: "italiano" selected as language

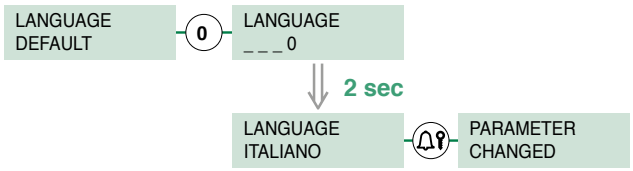

Self-testing

Call mode testing

When the device is switched on, it performs a test to check the type of system configured on the speaker (Simplebus, Simplebus Top or VIP).

If the digital call module is new (or if the parameters have been restored to the default values):

- if the module is connected to a VIP system
  » *the module aligns with the speaker, self-configuring in "VIP call mode", and receives all the information and data stored on the speaker;*
- if the module is connected to an SB TOP system
  » *he first call mode display screen shows the string ERROR ✱.*
- if the module is connected to an SB system
  » *the first call mode display screen shows the string SIMPLEBUS.*

If the digital call module has a directory already containing data:

- if the directory and speaker are configured differently:
  » *he first call mode display screen shows the string ERROR ✱.*
- if the directory and speaker are aligned:
  » *the first checking screen will show the system type SB / SB TOP / VIP.*

✱ **Follow the procedure described in "1.1.3. CALL MODE" if you want to align the directory module with the type of system configured on the speaker.**

INITIAL CONDITION		
Module powered up	CALL MODE PLEASE WAIT	The message PLEASE WAIT indicates self-testing in progress.
	CALL MODE SIMPLEBUS or: CALL MODE ERROR	At the end of self-testing the type of system set is displayed (SIMPLEBUS by default). If the directory and speaker are configured differently. ⁜

⁜ **Follow the procedure described in "1.1.3. CALL MODE" if you want to align the directory module with the type of system configured on the speaker.**

Setting the language

If the LANGUAGE parameter is set to DEFAULT.

During startup (after call mode testing), you will be asked to select the operating language.

INITIAL CONDITION		
	LANGUAGE DEFAULT	The current value of the parameter appears on screen.
PROCEDURE	**DISPLAY INFO**	**DESCRIPTION**
Select the operating language by entering the corresponding number: 0 = ITALIANO 1 = ENGLISH 2 = FRANÇAIS 3 = DEUTSCH 4 = PORTUGUES 5 = DANSK 6 = SUOMI 7 = NEDERLANDS 8 = ESPAÑOL 9 = SVENSKA 10 = POLSKI 11 = NORSK 12 = DEFAULT(italian)	LANGUAGE _ _ _ 1 ⇓ **2 sec** LANGUAGE ENGLISH	**N.B. If the LANGUAGE parameter is set to DEFAULT, you will be asked to set the language again at the next startup.**
Press the 🔔🔑 key to confirm the value of the parameter. Press X to exit the selected language.	PARAMETER CHANGED or: ERROR	If entry is successful. If entry does not fall within the limits.

Using the digital module

Calling a user

INITIAL CONDITION		
Module powered up in standby.	ENTER USER CODE	
PROCEDURE	**DISPLAY INFO**	**DESCRIPTION**
Enter code using the numeric keypad on module Art. 3070S.	_ _ 1 PRESS 🔔 TO CALL	**EXAMPLE:** calling a user with code 1.
Press the 🔔🔑 key to call.	PLEASE WAIT	
	If the call was successful you will see: CALL EFFECTED If the call was not successful you will see: CALL FAILED Or if the riser is busy you will see: BUSY USER	
	If the call is successful and the user answers you will see: COMMUNICATING...	

Ending a call/conversation

INITIAL CONDITION		
	CALL EFFECTED Or: COMMUNICATING...	Call effected. Conversation in progress.
PROCEDURE	**DISPLAY INFO**	**DESCRIPTION**
Press the X. key	END OF COMMUNICATION	

Opening the door by entering the password code

INITIAL CONDITION		
	ENTER USER CODE	Standby
PROCEDURE	**DISPLAY INFO**	**DESCRIPTION**
Press the key.	PASSWORD: _ _ _ _ _ _ CONFIRM WITH	To cancel the procedure press the X. key
Enter the password code. (min. 4 characters).	PASSWORD: _ _ * * * * CONFIRM WITH	If the password is 4-5 characters long, it will self-complete: the first digits will be zero (e.g.: 001234 / 012345).
Press to confirm.	DOOR OPEN or: WRONG PASSWORD	If the password code is already in the memory. The contact on the speaker module will be activated. If the password code does not exist in the memory.

Accessing/exiting the configuration stage

PROCEDURE	DISPLAY INFO	DESCRIPTION
Connect terminal PR to terminal – and power up the module.	MAIN SETTINGS	The module is in programming mode. The menus are scrolled through automatically every 2 seconds.
Configure the parameters you wish to change...(see **"1.1. System parameters"**)		
After configuration is complete, cut off the power supply and remove the connection between PR and –.		The module has exited programming mode.

Or:

PROCEDURE	DISPLAY INFO	DISPLAY INFO
In standby. Press .	PASSWORD: _ _ _ _ _ _ CONFIRM WITH	Login screen.
Enter the supercode (default = 778899).	PASSWORD: ****** CONFIRM WITH	If the supercode is 4-5 characters long, it will self-complete: the first digits will be zero (e.g.: 001234 / 012345).
Press to confirm.	MAIN SETTINGS	The module is in programming mode. The menus are scrolled through automatically every 2 seconds.
Configure the parameters you wish to change...(see **"1.1. System parameters"**)		
Wait 30 sec.		The module has exited programming mode.

1. Settings

1.1. System parameters

1.1.1. Speaker parameters

This procedure can be used to:

A. Change the audio time audio times (t AUDIO)

B. Change the door lock time the door lock relay closure time (t DOOR LOCK)

C. Change the reset time **[NOT VIP]** the speaker module reset time once door-entry phone communication has ended (t RESET)

PROCEDURE	DISPLAY INFO	DESCRIPTION
Access configuration (see **"Accessing/exiting the configuration stage"**) Select the menu SETTINGS / SYSTEM PARAM. / **SPEAKER PARAM.** using the key 🔔🔑.	SETTINGS SYSTEM PARAM. SYSTEM PARAM. SPEAKER PARAM. SPEAKER PARAM. ENTER t AUDIO	**The menus are scrolled through automatically every 2 seconds.**
Select, using the key 🔔🔑 the menu option for the parameter you want to change. (t AUDIO, t DOOR LOCK, t RESET)	ENTER t AUDIO 0010	**EXAMPLE:** Changing the conversation time. The minimum (not current) value of the parameter appears on screen.
To change the parameter, enter a new value.	ENTER t AUDIO _ _ 20	**Choose a value that falls within the following limits:** **[SB] [SB TOP]** t AUDIO (10-180) t DOOR LOCK (1-8) t RESET (1-10) **[VIP]** t AUDIO (30-600) t DOOR LOCK (1-60)
Press the key 🔔🔑 to confirm the value of the parameter.	PARAMETER CHANGED or: ERROR	If entry is successful. If entry does not fall within the limits.
Exit configuration (see **"Accessing/exiting the configuration stage"**)		

D. Viewing **[NO VIP]** This procedure can be used to view the audio time, door lock relay closure time and reset time for the speaker module, plus the call mode.

PROCEDURE	DISPLAY INFO	DESCRIPTION
Access configuration (see **"Accessing/exiting the configuration stage"**) Select the menu SETTINGS / SYSTEM PARAM. / SPEAKER PARAM. / **VIEWING** using the key 🔔🔑.	SETTINGS SYSTEM PARAM. SYSTEM PARAM. SPEAKER PARAM. SPEAKER PARAM. VIEWING	**The menus are scrolled through automatically every 2 seconds.**

	AUDIO TIMING 0020 DOOR LOCK TIME 0002 RESET TIME 0010 CALL MODE SIMPLEBUS	The parameter values are displayed automatically every 2 seconds. Press X o exit speaker parameter viewing.
Exit configuration (see **"Accessing/exiting the configuration stage"**)		

1.1.2. Download type **[NO VIP]**

The parameter sets the type of connection (RS232 or RS485) used for data management.

PROCEDURE	DISPLAY INFO	DESCRIPTION
Access configuration (see **"Accessing/exiting the configuration stage"**) Select the menu SETTINGS / SYSTEM PARAM. / **DOWNLOAD TYPE** using the 🔔🔑 key.	MAIN SETTINGS SETTINGS SYSTEM PARAM. SYSTEM PARAM. DOWNLOAD TYPE DOWNLOAD TYPE RS232	**The menus are scrolled through automatically every 2 seconds.** The currently configured value appears on screen.
Select the download type by entering the corresponding number: 0 = RS232 1 = RS485	DOWNLOAD TYPE _ _ _ 1 ⇓ **2 sec** DOWNLOAD TYPE RS485	**EXAMPLE:** Changing the download type.
Press the key 🔔🔑 to confirm the value of the parameter.	PARAMETER CHANGED or: ERROR	If entry is successful. If entry does not fall within the limits.
Exit configuration (see **"Accessing/exiting the configuration stage"**)		

1.1.3. Call mode

There are 5 call management modes to choose from:

- Standard Simplebus (default),
- Simplebus Indirect code,
- Simplebus Top,
- Simplebus Top Indirect code,
- VIP

A. SIMPLEBUS - STANDARD call mode (default)

In this operating mode, the door-entry phone user is identified by a Code field no longer than 3 digits (between 1 and 240).

The call is made as follows:

1. On the keypad, enter the code 1
2. Press the key

» *transmit the call to the user identified with the code 1*

B. SIMPLEBUS - INDIRECT CODE call mode

In this operating mode, the door-entry phone user is identified by an Indirect Code field no longer than 6 digits and a Code field no longer than 3 digits (between 1 and 240).

Example

User identified by Code = 1 and Indirect Code = 1000

The call is made as follows:

1. On the keypad, enter the code 1000
2. press the key

» *transmit the call to the user identified with the code 1*

C. SIMPLEBUS TOP call mode

In this operating mode, the door-entry phone user is identified by a 2-part Code field; a zone field with up to 3 digits between 1 and 500) and a user field which must have 3 digits (between 1 and 240).

The call is made as follows:

1. On the keypad, enter the code 25 015
2. press the key

» *call transmitted to the user identified with the code 25 015*

D. SIMPLEBUS TOP – INDIRECT CODE call mode

In this operating mode, the door-entry phone user is identified by an Indirect Code field no longer than 6 digits and a 2-part Code field; a zone field with up to 3 digits between 1 and 500) and a user field which must have 3 digits (between 1 and 240).

Example

User identified by Code = 25 015 and Indirect Code = 1000

The call is made as follows:

1. On the keypad, enter the code 1000
2. press the key .

» *call transmitted to the user identified with the code 25 015*

E. VIP call mode

In this operating mode the door-entry phone user is identified with a VIP address (max. 8 digits; for code self-completion please refer to the technical manual for VIP Manager software).

Address entry on the speaker is managed using VIP Manager software.

The call is made as follows:

1. On the keypad, enter the code 56
2. press the key

» *transmit the call to the user identified with the code 56*

PROCEDURE	DISPLAY INFO	DESCRIPTION
Access configuration (see **"Accessing/ exiting the configuration stage"**) Select the menu SETTINGS / SYSTEM PARAM. / **CALL MODE** using the 🔔🔑 key.	MAIN SETTINGS SETTINGS SYSTEM PARAM. SYSTEM PARAM. CALL MODE CALL MODE SIMPLEBUS	**The menus are scrolled through automatically every 2 seconds.** The current value of the parameter appears on screen (Simplebus, Simplebus Top, VIP).
Select the call mode by entering the corresponding number: 0 = SIMPLEBUS 1 = SIMPLEBUS TOP 2 = VIP	CALL MODE _ _ _ 1 ⇓ **2 sec** CALL MODE SIMPLEBUS TOP	**EXAMPLE:** setting the system as SIMPLEBUS TOP
Press the 🔔🔑 key to confirm the value of the parameter.	PLEASE WAIT	If the change was successful the speaker will emit a confirmation tone.
	CALL MODE STANDARD	The current value of the parameter appears on screen (Standard or indirect code).
Select the call mode by entering the corresponding number: 0 = STANDARD 1 = INDIRECT CODE **[NO VIP]**	CALL MODE _ _ _ 1 ⇓ **2 sec** CALL MODE INDIRECT CODE	**EXAMPLE:** setting the call mode as INDIRECT CODE.
Press the 🔔🔑 key to confirm the value of the parameter.	PARAMETER CHANGED or: ERROR or: ERROR DEFAULT SETTINGS	If entry is successful. If entry does not fall within the limits. **If the directory and speaker are configured differently and the directory already contains data, the default values must be restored.**
Exit configuration (see **"Accessing/exiting the configuration stage"**)		

1.1.4. RS485 address [NO VIP]

The value of this parameter is used only in special applications.

PROCEDURE	DISPLAY INFO	DESCRIPTION
Access configuration (see **"Accessing/exiting the configuration stage"**) Select the SETTINGS / SYSTEM PARAM. / **ADDRESS RS485** using the key.	MAIN SETTINGS SETTINGS SYSTEM PARAM. SYSTEM PARAM. ADDRESS RS485 ADDRESS RS485 0000	**The menus are scrolled through automatically every 2 seconds.** The current value of the parameter appears on screen.
Enter the RS485 address: from 0 to 255.	ADDRESS RS485 _ 250 ⇓ **2 sec** RS485 0250	**EXAMPLE:** Entering address 250.
Press the key to confirm the value of the parameter.	PARAMETER CHANGED or: ERROR	If entry is successful. If entry does not fall within the limits.
Exit configuration (see **"Accessing/exiting the configuration stage"**)		

1.2. Language

The value of this parameter is used to set the language in which messages are displayed.

PROCEDURE	DISPLAY INFO	DESCRIPTION
Access configuration (see **"Accessing/exiting the configuration stage"**) Select the menu SETTINGS / **LANGUAGE** using the key.	MAIN SETTINGS SETTINGS LANGUAGE LANGUAGE ENGLISH	**The menus are scrolled through automatically every 2 seconds.** The current value of the parameter appears on screen.
Select the operating language by entering the corresponding number: 0 = ITALIANO / 1 = ENGLISH 2 = FRANÇAIS / 3 = DEUTSCH 4 = PORTUGUES / 5 = DANSK 6 = SUOMI / 7 = NEDERLANDS 8 = ESPAÑOL / 9 = SVENSKA 10 = POLSKI / 11 = NORSK 12 = DEFAULT(italiano)	LANGUAGE _ _ _ 0 ⇓ **2 sec** LANGUAGE ITALIANO	**EXAMPLE:** Setting the language to English. **N.B. If the LANGUAGE parameter is set to DEFAULT, you will be asked to set the language again at the next startup.**
Press the key to confirm the value of the parameter.	PARAMETER CHANGED or: ERROR	If entry is successful. If entry does not fall within the limits.
Exit configuration (see **"Accessing/exiting the configuration stage"**)		

1.3. Default settings

This procedure restores the factory-set default parameters:

Language = DEFAULT;
System type = SIMPLEBUS;
Call type = STANDARD;
Screensaver =disabled (the Screen Saver function can only be programmed for VIP systems using VIP Manager);
RS485 address = 0000;
Download type = RS232;
Supercode = 778899;
Welcome message = disabled (the Welcome message function can only be programmed for VIP systems using VIP Manager);
Static welcome message = disabled (the Welcome message function can only be programmed for VIP systems using VIP Manager);
Number of directory entries = 0
Number of password entries = 0

This procedure resets the directory and password database

PROCEDURE	DISPLAY INFO	DESCRIPTION
Access configuration (see **"Accessing/exiting the configuration stage"**) Select the menu SETTINGS / **DEFAULT SETTINGS** using the key.	MAIN SETTINGS SETTINGS DEFAULT SETTINGS	**The menus are scrolled through automatically every 2 seconds.** The current value of the parameter appears on screen.
Select the desired value by entering the corresponding number: 0 = NO 1 = YES	DEFAULT SETTINGS _ _ _ 1 **2 sec** DEFAULT SETTINGS YES	
Press the key to confirm the value of the parameter. Press X to exit the menu.	PLEASE WAIT PARAMETER CHANGED	**If entry is successful.**
Exit configuration (see **"Accessing/exiting the configuration stage"**)		

2. Access control

2.1. Supercode

The supercode can be used to access the configuration menu.

2.1.1. Change

PROCEDURE	DISPLAY INFO	DESCRIPTION
Access configuration (see **"Accessing/ exiting the configuration stage"**) Select the menu ACCESS CONTROL / SUPERCODE / **CHANGE** using the key 🔔🔑.	MAIN ACCESS CONTROL ACCESS CONTROL SUPERCODE SUPERCODE CHANGE	**The menus are scrolled through automatically every 2 seconds.**
Enter the new supercode value.	SUPERCODE VALUE: _ _ _ * * *	The supercode must be at least 4 digits long. If the supercode is 4-5 characters long, it will self-complete: the first digits will be zero (e.g.: 001234 / 012345).
Press the 🔔🔑 key to confirm the value of the parameter.	PARAMETER CHANGED or: PASSWORD ALREADY IN MEMORY	If entry is successful. If the password has already been entered.
Exit configuration (see **"Accessing/ exiting the configuration stage"**)		

2.1.2. Default settings

PROCEDURE	DISPLAY INFO	DESCRIPTION
Access configuration (see **"Accessing/ exiting the configuration stage"**) Select the menu ACCESS CONTROL / SUPERCODE / **DEFAULT SETTINGS** using the key 🔔🔑.	ACCESS CONTROL SUPERCODE SUPERCODE DEFAULT SETTINGS DEFAULT SETTINGS NO	**The menus are scrolled through automatically every 2 seconds.** The current value of the parameter appears on screen.
Select the desired value: 0 = NO 1 = YES	DEFAULT SETTINGS _ _ _ 1 ⇓ **2 sec** DEFAULT SETTINGS YES	default = 778899
Press the 🔔🔑 key to confirm the value of the parameter.	PARAMETER CHANGED or: ERROR	If entry is successful. If entry does not fall within the limits.
Exit configuration (see **"Accessing/ exiting the configuration stage"**)		

2.2. Password

The door lock relay on the speaker module can be activated by entering a password code stored previously (see **"Opening the door by entering the password code"**)

2.2.1. Enter

PROCEDURE	DISPLAY INFO	DESCRIPTION
Access configuration (see **"Accessing/ exiting the configuration stage"**) Select the ACCESS CONTROL / PASSWORD / **ENTER** using the key 🔔🔑.	MAIN ACCESS CONTROL ACCESS CONTROL PASSWORD PASSWORD ENTER	**The menus are scrolled through automatically every 2 seconds.**
Enter the desired password code.	PASSWORD VALUE: _ _ _ _ _ _ PASSWORD VALUE: * * * * * *	The password must be at least 4 digits long. If the password is 4-5 characters long, it will self-complete: the first digits will be zero (e.g.: 001234 / 012345).
Press the 🔔🔑 key to confirm the value of the parameter. To exit the menu, press X.	PARAMETER CHANGED or: PASSWORD ALREADY IN MEMORY	If entry is successful. Up to 1000 password codes can be entered. If the password has already been entered.
Exit configuration (see **"Accessing/ exiting the configuration stage"**)		

2.2.2. Delete

PROCEDURE	DISPLAY INFO	DESCRIPTION
Access configuration (see **"Accessing/ exiting the configuration stage"**) Select the menu ACCESS CONTROL / PASSWORD / **DELETE** using the key 🔔🔑	ACCESS CONTROL PASSWORD PASSWORD DELETE	**The menus are scrolled through automatically every 2 seconds.**
Enter the desired password code.	PASSWORD VALUE: _ _ _ _ _ _ PASSWORD VALUE: * * * * * *	Enter the exact password (the first two digits, if omitted, will be entered as zero).
Press the 🔔🔑 key to confirm deletion. To exit the menu, press X.	PARAMETER CHANGED or: WRONG PASSWORD	If entry is successful. If the password is not recognised.
Exit configuration (see **"Accessing/ exiting the configuration stage"**)		

2.2.3. Delete all

PROCEDURE	DISPLAY INFO	DESCRIPTION
Access configuration (see **"Accessing/ exiting the configuration stage"**) Select the menu ACCESS CONTROL / PASSWORD / **DELETE ALL** using the key 🔔🔑.	ACCESS CONTROL PASSWORD PASSWORD DELETE ALL	**The menus are scrolled through automatically every 2 seconds.**
	DELETE ALL PASSWORD?	Press the X key to cancel the procedure.
Press the 🔔🔑 key to confirm deletion.	PLEASE WAIT PARAMETER CHANGED	
Exit configuration (see **"Accessing/ exiting the configuration stage"**)		

3. Info

This procedure can be used to view:

- the firmware version
- the number of users stored **[NO VIP]**
- the number of passwords stored **[NO VIP]**
- the RS485 address **[NO VIP]**
- the call mode

PROCEDURE	DISPLAY INFO	DESCRIPTION
Access configuration (see **"Accessing/ exiting the configuration stage"**) Select the menu INFO using the 🔔🔑 key.	MAIN INFO Art. 3070B 1.1	**The menus are scrolled through automatically every 2 seconds.**
Press the X key to exit the menu.		
Exit configuration (see **"Accessing/exiting the configuration stage"**)		

Data management using 1249B [NO VIP]

Entering a list (download)

Software Art.1249B can be used to enter the list with Indirect Code and Code fields for INDIRECT CODE operating mode on module 3070S. 3070S must be set to indirect code call mode (vedi **"1.1.3. Call mode"**).

INITIAL CONDITION		
Module powered up in standby mode.	ENTER USER CODE	
PROCEDURE	**DISPLAY INFO**	**DESCRIPTION**
Connect the cable supplied with software Art. 1249B to terminals TX / RX / - (or D / D- if you have an RS485 line).	ENTER USER CODE	
Run software Art. 1249B.	ENTER USER CODE	**On software 1249B with R.I. 003, the CALL MODE must be set as Indirect Code without a name entry.**
Make the list with the Code and Indirect Code entries in software Art. 1249B, or load an existing list.	ENTER USER CODE	
Press the Download button in software Art. 1249B.		
	DOWNLOADING... COMPLETED Or DOWNLOADING... ABORTED	If the download was completed successfully. If an error occurred during the download.

Reading (upload) of the stored list

Software Art.1249B can be used to read, inside module 3070S, the list with Indirect Code and Code fields for INDIRECT CODE operating mode. 3070S must be set to indirect code call mode (see **"1.1.3. Call mode"**).

INITIAL CONDITION		
Module powered up in standby mode.	ENTER USER CODE	
PROCEDURE	**DISPLAY INFO**	**DESCRIPTION**
Connect the cable supplied with software Art. 1249B to terminals TX / RX / - (or D / D- if you have an RS485 line).	ENTER USER CODE	
Run software Art. 1249B.	ENTER USER CODE	
Press the Upload button in software Art. 1249B.		
	UPLOAD COMPLETED Or UPLOAD ABORTED	If the upload was completed successfully. If an error occurred during the upload.

Navigation tree

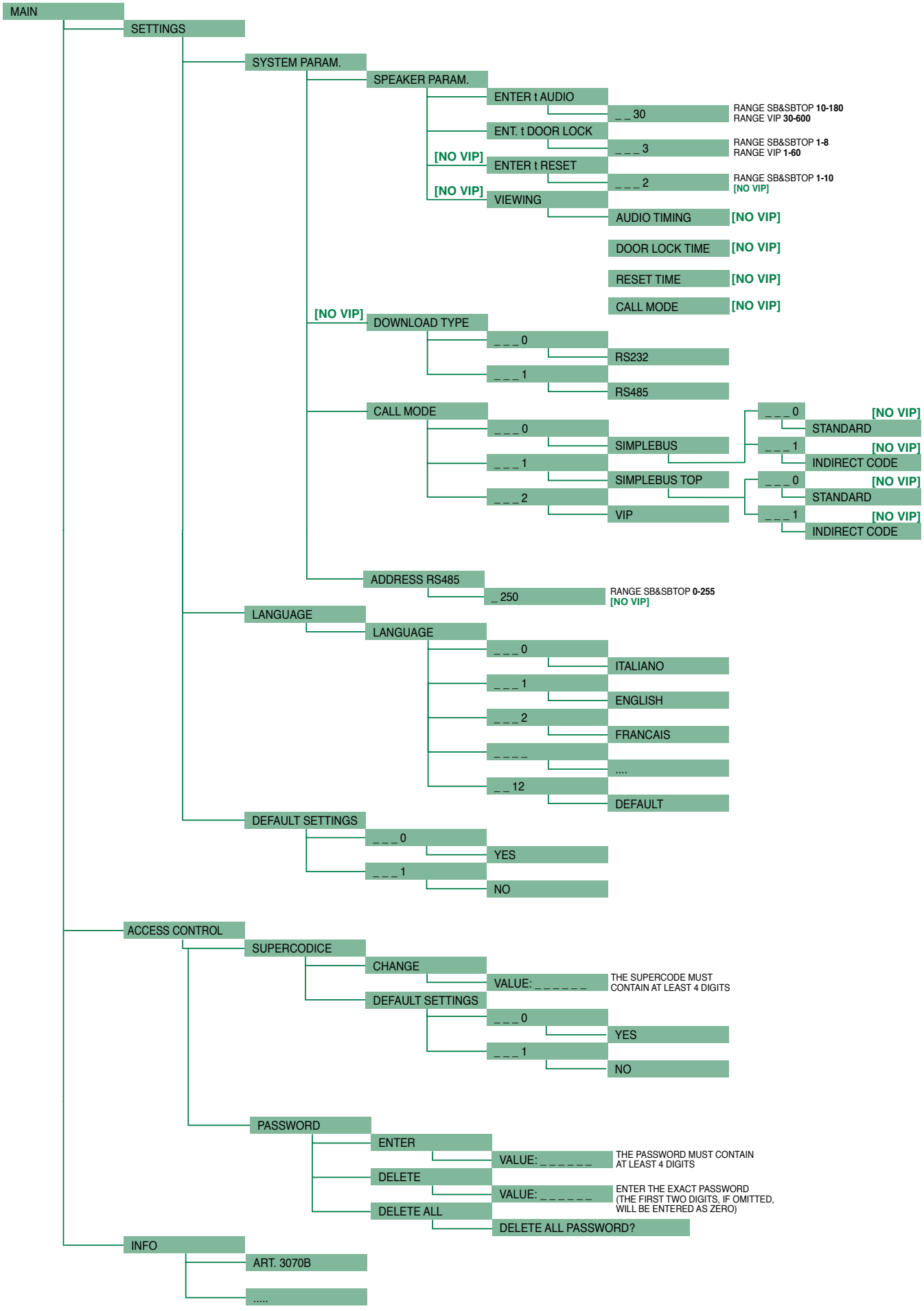

System performance and layouts

For further information of system performance and to view installation layouts, click on the system type that best meets your requirements:

- **Building Kit audio/video system** for the creation of audio-video systems for *small apartment blocks.*
- **SBTOP audio/video system** for the creation of audio-video systems for *residential complexes.*
- **SB2 audio system** for the creation of audio systems for *residential complexes.*
- **SB1 audio system** for the creation of audio systems for *residential complexes.*

Table of contents

Warning

Description **461**

Technical features **462**

Connections **463**

- **Connection to earth of 3072S** **463**
- **Connection to computer** **463**
- **Connection in Building Kit and SB2 systems** **464**
- **Connection in SBTOP and SB1 systems** **464**

Program and Operation **465**

- **Navigation mode** **465**
- **Self-testing** **466**
  - Call management testing 466
  - Setting the language 466
- **Using the digital module** **467**
  - Calling a user 467
  - Ending a call/conversation 468
- **Accessing/exiting the configuration stage** **468**
- **1. Settings** **469**
  - 1.1. System parameters 469
    - 1.1.1. Speaker Parameters 469
    - 1.1.2. Download type **[NOT VIP]** **470**
    - 1.1.3. Call management 471
    - 1.1.4. RS485 Address **[NOT VIP]** **472**
  - 1.2. Language 472
  - 1.3. Default settings 473
- **2. Info** **474**
- **DATA MANAGEMENT USING 1249B [NOT VIP]** **474**
  - Entering a list (download) 474
  - Reading (upload) of the stored list 475
- **2. Navigation tree** **476**

System performance and layouts **477**



Digital directory module Art. 3072S

Description

Vandalcom series digital directory module made using double 2.5 mm 316 stainless steel plate, complete with 4 backlit buttons and 32-character alphanumerical display. Stores up to 1000 user names. Name scrolling is carried out using 2 search buttons. One the right name has been found, just press the call button.
For use in Building kit, SBTOP, SB1 audio, SB2 audio and ViP systems.

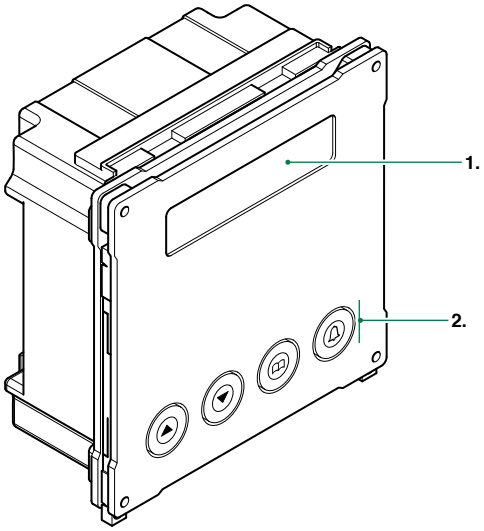

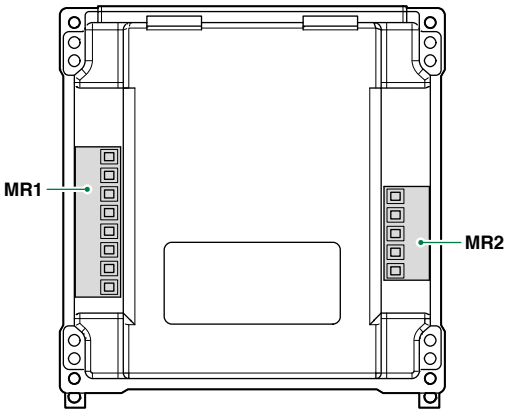

1. LCD screen

2. Navigation and confirm buttons

Terminal block for **MR1** connection

V+ DC power supply positive
V- DC power supply negative
12~ 12~ AC power supply
S serial port
- reference negative
PR programming input
- reference negative

Terminal block for **MR2** connection

D+ RS485 connection
D- RS485 connection
- reference negative
RX RS232 connection
TX RS232 connection

Technical features

MAIN FEATURES	
Backlighting color	Green led
Vandal Resistant rating (IK code)	Yes
Product height (mm)	106
Product width (mm)	106
Product depth (mm)	56
Operating temperature (°C)	-25 ÷ 55
Maximum current absorption (mA)	100
SOFTWARE/FIRMWARE SPECIFICATIONS	
No. of storable users	1000
HARDWARE SPECIFICATIONS	
Total buttons	4
COMPATIBILITY	
Simplebus Top audio/video system	Yes
Building Kit audio/video system	Yes
Simplebus 2 audio system	Yes
Simplebus 1 audio system	Yes
Vip system	Yes
MOUNTING/INSTALLATION	
Flush-mounted	Yes
Wall-mounted	Yes
AUDIO/VIDEO FEATURES	
Display resolution (H x V)	16x2 characters
CONNECTIVITY	
Type of connections/ports	RS232, RS485, Infrared
Infrared port	Yes
RS232 ports	Yes
RS485 ports	Yes

Connections

Connection to earth of 3072S

To prevent any interference caused by electrostatic discharges, it is advisable to screen the casing as shown in the diagram

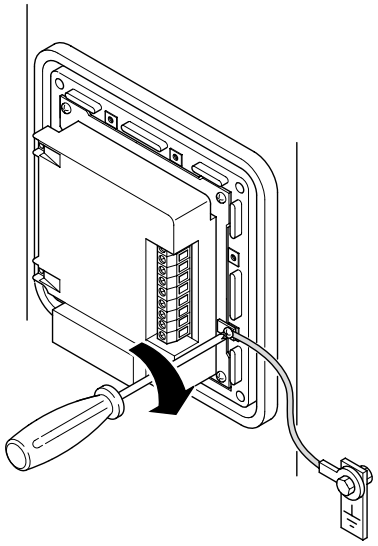

Connection to computer

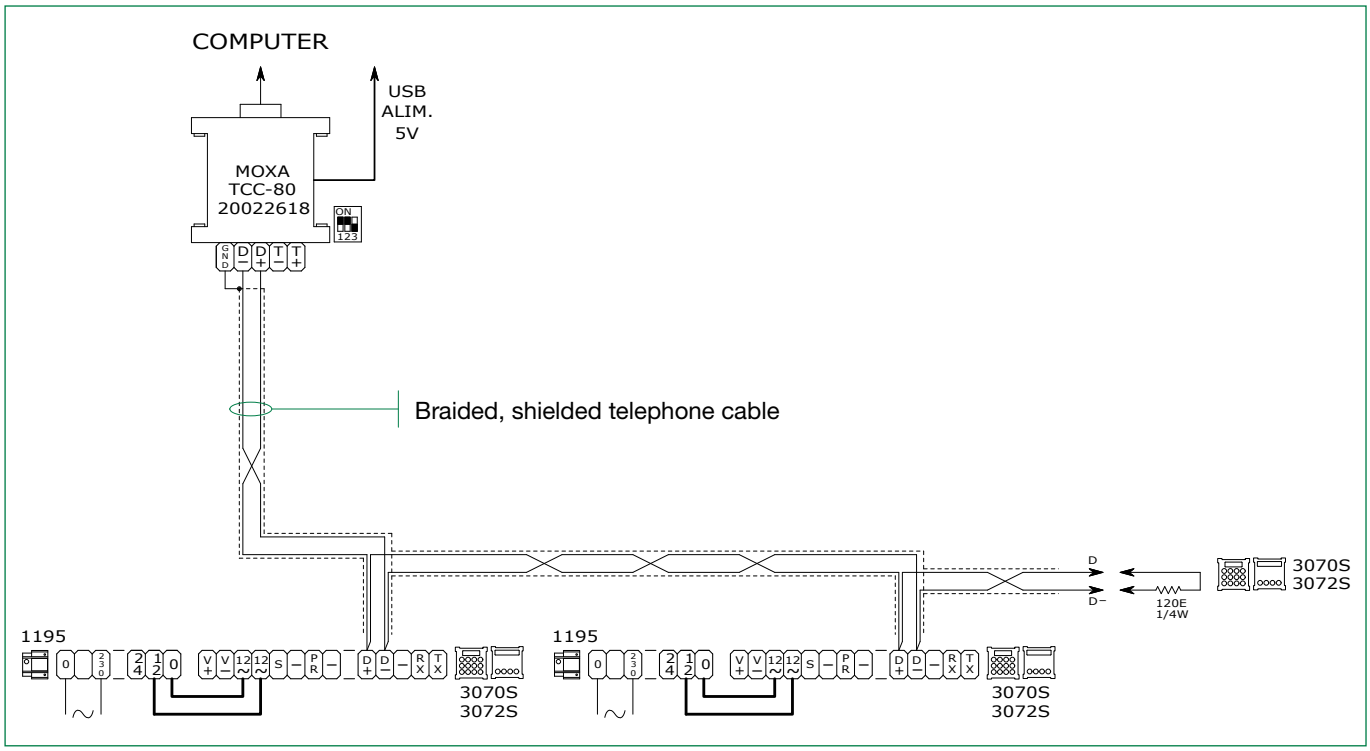

It is possible to use up to 5 terminals Art. 3070S-3072S

Maximum distance between Art. 20022618 and furthest terminal Art. 3070S-3072S: 100 m

Connection in Building Kit and SB2 systems

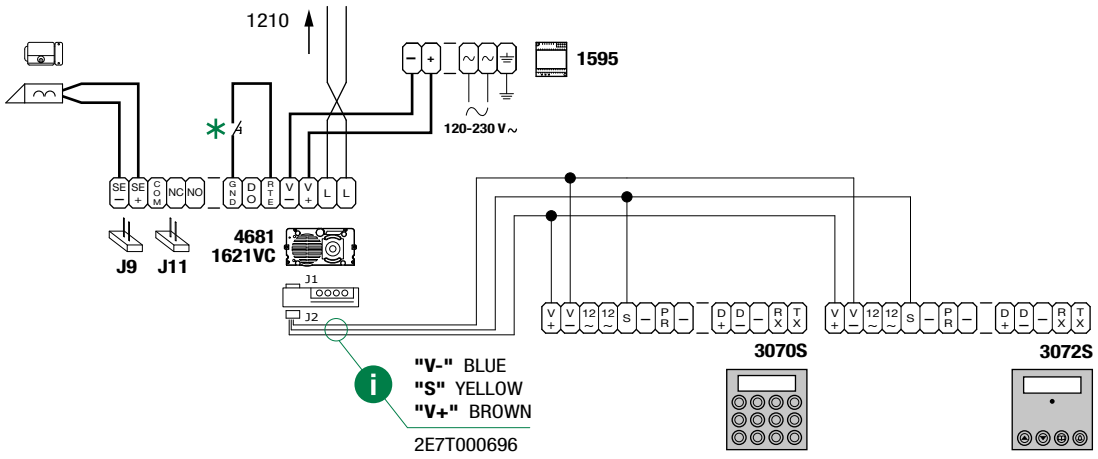

Use the cable 2E7T000696 supplied with Art. 3070S and Art. 3072S

* 20 m max. Local door-opener button.

Connection in SBTOP and SB1 systems

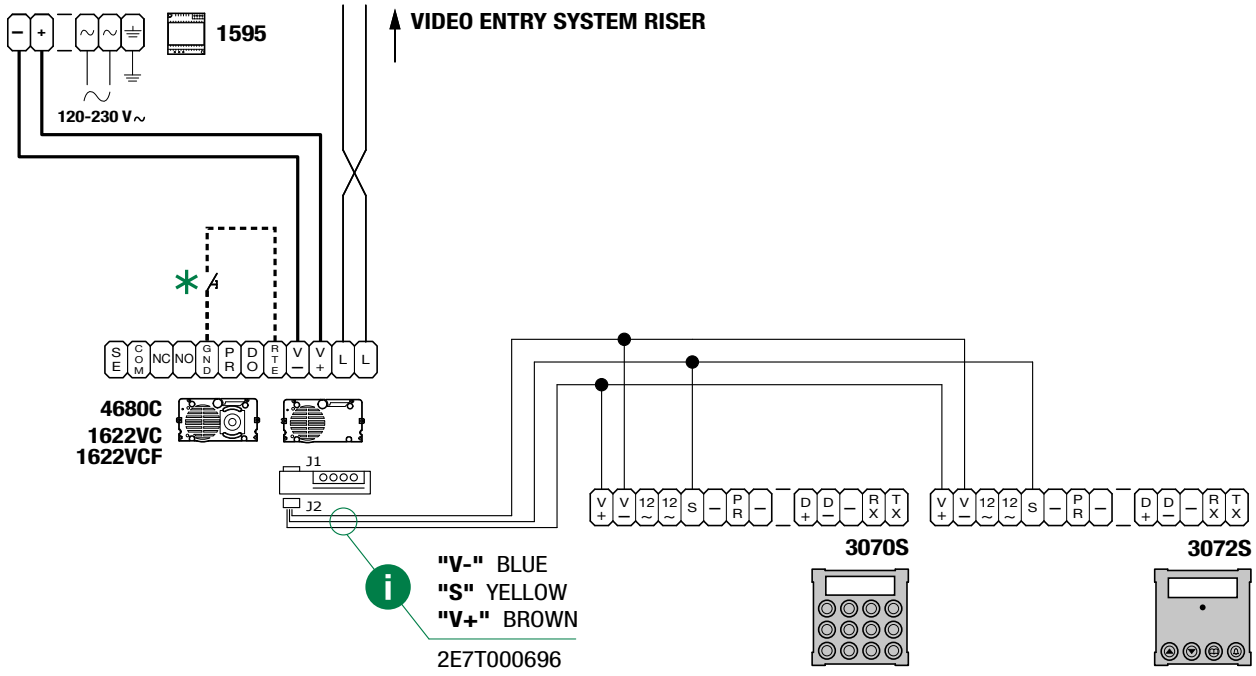

Use the cable 2E7T000696 supplied with Art. 3070S and Art. 3072S.

* 20 m max. Local door-opener button.

Program and Operation

The Comelit digital call module Art. 3072S can be used in Building kit, SBTOP, SB1 audio, SB2 audio and ViP systems and can be used to call a door-entry phone user by selecting his/her name from a list saved to the memory:

The main characteristics are as follows:

- Memory capacity 1400 names of 16 alphanumerical characters.
- 32-character alphanumeric display.
- Option of changing the Door lock time, Audio time and Reset time parameters for the speaker module (reset time adjustment is not available in VIP mode).
- 3 call management modes (see **"1.1.3. Call management"**):
  - Simplebus - standard (default),
  - Simplebus Top,
  - VIP.
- Entering the list of users (Download) via connection to PC equipped with software Art. 1249B.
- Entering users via connection with the PC can be performed over an RS232 line or over an RS485 line by means of the interface card Art. 20022618 (see **"Connection to computer"**).
- Reading (Upload) the list of users stored on the directory module via connection to PC equipped with software Art. 1249B.
- Option of displaying graphics interface messages in one of 12 available languages (Italian, English, French, German, Portuguese, Danish, Finnish, Dutch, Spanish, Swedish, Polish and Norwegian).
- Welcome message management (only available in VIP mode and programmable via VIP Manager).
- Screensaver (only available in VIP mode and programmable via VIP Manager).

Navigation mode

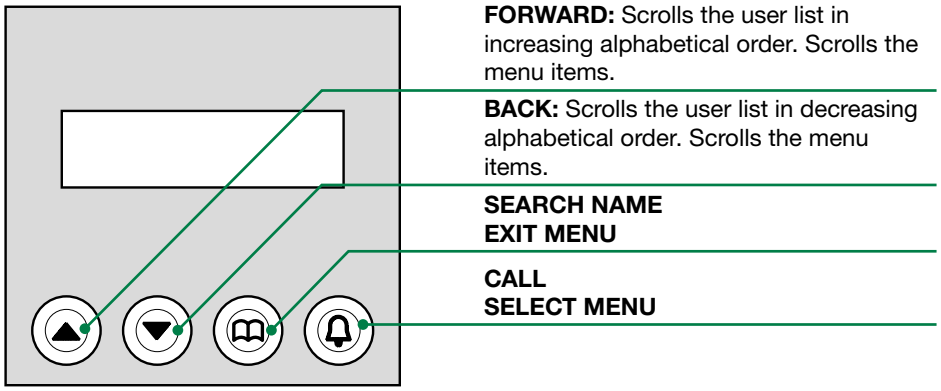

✓ Access to the configuration stage has been carried out (see **"Accessing/exiting the configuration stage"**).

▶ Scroll through the menu by pressing ▲ ▼.

▶ Press 🔔 to confirm the selection. Press 🕮 to return to the menu level above.

EXAMPLE: Accessing "language" parameter modification. "italiano" selected as language.

▶ access configuration mode (see **"Accessing/exiting the configuration stage"**)

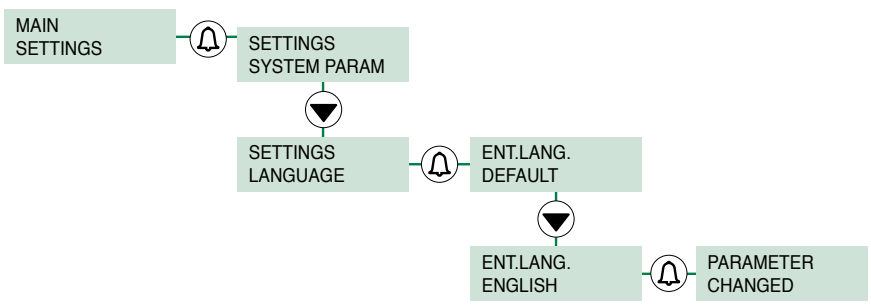

Self-testing

Call management testing

When the device is switched on, it performs a test to check the type of system configured on the speaker (Simplebus, Simplebus Top or VIP).

If the digital call module is new (or if the parameters have been restored to the default values):

- if the module is connected to a VIP system
  - » *the module aligns with the speaker, self-configuring in "Call management VIP", and receives all the information and data stored on the speaker;*
- if the module is connected to an SB TOP system
  - » *the first call mode display screen shows the string ERROR ✱.*
- if the module is connected to an SB system
  - » *the first call mode display screen shows the string SIMPLEBUS.*

If the digital call module has an enhanced directory:

- if the directory and speaker are configured differently:
  - » *the first call mode display screen shows the string ERROR ✱.*
- if the directory and speaker are aligned:
  - » *the first checking screen will show the system type SB / SB TOP / VIP.*

✱ **Follow the procedure described in "1.1.3. Call management" if you want to align the directory module with the type of system configured on the speaker.**

INITIAL CONDITION		
On power up.	CALL MANAGEMENT PLEASE WAIT	The message PLEASE WAIT indicates self-testing in progress.
	CALL MANAGEMENT SIMPLEBUS Or: CALL MANAGEMENT ERROR	At the end of self-testing the type of system set is displayed (SIMPLEBUS by default). If the directory and speaker are configured differently. ⁜

⁜ **Follow the procedure described in "1.1.3. Call management" if you want to align the directory module with the type of system configured on the speaker.**

Setting the language

If the LANGUAGE parameter is set to DEFAULT.

During startup (after call mode testing), you will be asked to select the operating language.

INITIAL CONDITION		
DEFAULT(italiano)	INS. LINGUA DEFAULT ↑ ↓	The current value of the parameter appears on screen.
PROCEDURE	**DISPLAY INFO**	**DESCRIPTION**
Scroll through the list using ▲▼	INS.LANG. ENGLISH ↑ ↓	**N.B. If the LANGUAGE parameter is set to DEFAULT, you will be asked to set the language again at the next startup.**
Press 🔔 to confirm.	PARAMETER CHANGED	

Using the digital module

Calling a user

INITIAL CONDITION		
On power up in standby.	SELECT NAME BY ↑ O ↓ SEARCH THE NAME BY 🕮	
PROCEDURE	**DISPLAY INFO**	**DESCRIPTION**
Select the user by scrolling through the list of users		
Scroll through the list using keys ▲ or ▼	JOHN DOE PRESS 🔔 TO CALL	To scroll faster, press and hold one of the keys.
OR: select the user by searching the directory		
Press 🕮 to access the directory.	ABCDEFGHIJKLMNOP QRSTUVWXYZáäßöøü	
Select the initial of the user name you want to search for using ▲ or ▼	ABCDEFGHIJKLMNOP QRSTUVWXYZáäßöøü	EXAMPLE: R
Press 🔔 to confirm.	SEARCHING...	
Scroll through the list using keys ▲ or ▼	ROSSI MARIO PRESS 🔔 TO CALL Or: NO USER FOUND	The display shows the first user in the list starting with the selected letter (or with the following letter). No user starting with the selected letter or the following letter has been found.
Make the call		
Press the 🔔 key to call.	PLEASE WAIT ⇓ If the call is successful you will see: CALL EFFECTED If the call was not successful you will see: CALL FAILED Or if the riser is busy you will see: USER BUSY	
	If the call is successful and the user answers you will see: COMMUNICATING	

Ending a call/conversation

INITIAL CONDITION		
	CALL EFFECTED Or: COMMUNICATING...	Call effected. Conversation in progress.
PROCEDURE	**DISPLAY INFO**	**DESCRIPTION**
Press the 🕮 key	END OF COMMUNICATION	

Accessing/exiting the configuration stage

PROCEDURE	DISPLAY INFO	DESCRIPTION
Connect terminal PR to terminal – and power up the module.	MAIN SETTINGS	The module is in programming mode. Scroll through the menu using ▲ or ▼. Press 🔔 to confirm. Press 🕮 to return to the menu level above.
Configure the parameters you wish to change...(see "1.1. System parameters")		
After configuration is complete, cut off the power supply and remove the connection between PR and –.		The module has exited programming mode.

1. Settings

1.1. System parameters

1.1.1. Speaker Parameters

This procedure can be used to:

A. Change the audio time: audio times (t AUDIO)

B. Change the door lock time: the door lock relay closure time (t DOOR LOCK)

C. Change the reset time [NOT VIP]: the speaker module reset time once door-entry phone communication has ended (t RESET)

PROCEDURE	DISPLAY INFO	DESCRIPTION
Access configuration (see **"Accessing/ exiting the configuration stage"**) Select the menu SETTINGS / SYSTEM PARAM. / **SPEAKER PARAM.**	MAIN SETTINGS SETTINGS SYSTEM PARAM. SYSTEM PARAM. SPEAKER PARAM. SPEAKER PARAM. ENTER t AUDIO	Scroll through the menu using ▲ or ▼. Press 🔔 to confirm. Press 🕮 to return to the menu level above.
Use ▲ ▼ to select the menu option for the parameter you want to change. (t AUDIO, t DOOR LOCK, t RESET)	ENTER t AUDIO 0010 ↑ ↓	EXAMPLE: Changing the audio time. The minimum (not current) value of the parameter appears on screen.
Enter the desired value using the ▲ or ▼.	ENTER t AUDIO 0100 ↑ ↓	RANGE: **[SB] [SB TOP]** t AUDIO (10-180) t DOOR LOCK (1-8) t RESET (1-10) **[VIP]** t AUDIO (30-600) t DOOR LOCK (1-60)
Press the key 🔔 to confirm the value of the parameter.	PARAMETER CHANGED	If entry is successful.
Exit configuration (see **"Accessing/exiting the configuration stage"**)		

D. Viewing [NOT VIP]: This procedure can be used to view the audio time, door lock relay closure time and reset time for the speaker module, plus the call management mode.

PROCEDURE	DISPLAY INFO	DESCRIPTION
Access configuration (see **"Accessing/ exiting the configuration stage"**) Select the menu SETTINGS / SYSTEM PARAM. / SPEAKER PARAM. / **VIEWING**	MAIN SETTINGS SETTINGS SYSTEM PARAM. SYSTEM PARAM. SPEAKER PARAM. SPEAKER PARAM. VIEWING	Scroll through the menu using ▲ or ▼. Press 🔔 to confirm. Press 🕮 to return to the menu level above.

Scroll using ▲ or ▼	PLEASE WAIT AUDIO TIMING 0020 ↑ ↓ DOOR LOCK TIME 0002 ↑ ↓ RESET TIME 0010 ↑ ↓ CALL MANAGEMENT SIMPLEBUS ↑ ↓	Press 🕮 to return to the menu level above.
Exit configuration (see **"Accessing/exiting the configuration stage"**)		

1.1.2. Download type **[NOT VIP]**

The parameter sets the type of connection (RS232 or RS485) used for data management.

PROCEDURE	DISPLAY INFO	DESCRIPTION
Access configuration (see **"Accessing/exiting the configuration stage"**) Select the menu SETTINGS / SYSTEM PARAM. / **DOWNLOAD TYPE.**	MAIN SETTINGS SETTINGS SYSTEM PARAM. SYSTEM PARAM. DOWNLOAD TYPE DOWNLOAD TYPE RS232 ↑ ↓	Scroll through the menu using ▲ or ▼. Press 🔔 to confirm. Press 🕮 to return to the menu level above. The currently configured value appears on screen.
Scroll through the list using keys ▲ or ▼. Press the 🔔 key to confirm.	DOWNLOAD TYPE RS485 ↑ ↓	**EXAMPLE:** Changing the download type.
	PARAMETER CHANGED	If entry is successful.
Exit configuration (see **"Accessing/exiting the configuration stage"**)		

1.1.3. Call management

There are 3 call management modes to choose from:

- Standard Simplebus (default),
- Simplebus Top,
- Vip

A. SIMPLEBUS - STANDARD call mode (default)
In this operating mode, the door-entry phone user is identified by a Username field and a Code field no longer than 3 digits (between 1 and 240).
Address entry on the speaker is managed using software **1249B**.

EXAMPLE: User name= Smith; Code= 1

B. SIMPLEBUS TOP call mode
In this call mode, the door-entry phone user is identified by the User name field and a Code field consisting of 2 parts, a zone field with up to 3 digits (between 1 and 500) and a user field which must have 3 digits (between 1 and 240).
Address entry on the speaker is managed using software **1249B**.

EXAMPLE: User name= Smith; Code= 25 015;

C. VIP call mode
In this operating mode the door-entry phone user is identified with a VIP address (max. 8 digits; for code self-completion please refer to the technical manual for VIP Manager software 1449).

Address entry on the speaker is managed using **VIP Manager software 1449**.

EXAMPLE: User name= Smith; Address= 1056;

PROCEDURE	DISPLAY INFO	DESCRIPTION
Access configuration (see **"Accessing/ exiting the configuration stage"**) Select the menu SETTINGS / SYSTEM PARAM. / **CALL MANAGEMENT**	MAIN SETTINGS SETTINGS SYSTEM PARAM. SYSTEM PARAM. CALL MANAGEMENT CALL MANAGEMENT SIMPLEBUS ↑ ↓	Scroll through the menu using ▲ or ▼. Press 🔔 to confirm. Press 🕮 to return to the menu level above. The current value of the parameter appears on screen (Simplebus, Simplebus Top, VIP).
Scroll through the list using keys ▲ or ▼	CALL MANAGEMENT SIMPLEBUS TOP ↑ ↓	EXAMPLE: setting the system as SIMPLEBUS TOP.
Press the 🔔 key to confirm.	PLEASE WAIT	If the change was successful the speaker will emit a confirmation tone.
	PARAMETER CHANGED Or: ERROR DEFAULT SETTINGS	If the change took place properly the system type is shown. If the directory and speaker are configured differently and the directory already contains data, the default values must be restored.
Exit configuration (see **"Accessing/exiting the configuration stage"**)		

1.1.4. RS485 Address [NOT VIP]

The value of this parameter is used only in special applications.

PROCEDURE	DISPLAY INFO	DESCRIPTION
Access configuration (see **"Accessing/ exiting the configuration stage"**) Select the menu SETTINGS / SYSTEM PARAM. / **ADDRESS RS485**	MAIN SETTINGS SETTINGS SYSTEM PARAM. SYSTEM PARAM. ADDRESS RS485 ADDRESS RS485 0000 ↑ ↓	**Scroll through the menu using ▲ or ▼.** Press 🔔 to confirm. Press 🕮 to return to the menu level above. The current value of the parameter appears on screen.
Enter the desired value using the ▲ or ▼ keys.	ADDRESS RS485 0250 ↑ ↓	**RANGE:** from 0 to 255. **EXAMPLE:** Entering address 250.
Press the 🔔 key to confirm.	PARAMETER CHANGED	
Exit configuration (see **"Accessing/exiting the configuration stage"**)		

1.2. Language

The value of this parameter is used to set the language in which messages are displayed.

PROCEDURE	DISPLAY INFO	DESCRIPTION
Access configuration (see **"Accessing/ exiting the configuration stage"**) Select the menu SETTINGS / **LANGUAGE**	MAIN SETTINGS SETTINGS LANGUAGE ENT.LANG. ENGLISH ↑ ↓	**Scroll through the menu using ▲ or ▼.** Press 🔔 to confirm. Press 🕮 to return to the menu level above. The current value of the parameter appears on screen.
Scroll through the list using ▲ ▼ DEFAULT(italiano)	ENT.LANG. ITALIANO ↑ ↓	**N.B. If the LANGUAGE parameter is set to DEFAULT, you will be asked to set the language again at the next startup.**
Press 🔔 to confirm.	PARAMETER CHANGED	
Exit configuration (see **"Accessing/exiting the configuration stage"**)		

1.3. Default settings

This procedure restores the factory-set default parameters.

Language = DEFAULT;

System type = SIMPLEBUS;

Call type = STANDARD;

Screensaver = disabled; (the Screen Saver function can only be programmed for VIP systems using VIP Manager);

RS485 address = 0000;

Download type = RS232;

Welcome message = disabled; (the Welcome message function can only be programmed for VIP systems using VIP Manager)

Static welcome message = disabled; (the Welcome message function can only be programmed for VIP systems using VIP Manager)

Number of directory entries = 0

This procedure resets the directory database

PROCEDURE	DISPLAY INFO	DESCRIPTION
Access configuration (see **"Accessing/exiting the configuration stage"**) Select the menu SETTINGS / **DEFAULT SETTINGS**	MAIN SETTINGS SETTINGS DEFAULT SETTINGS DEFAULT SETTINGS NO ↑ ↓	Scroll through the menu using ▲ or ▼. Press 🔔 to confirm. Press 🕮 to return to the menu level above. The current value of the parameter appears on screen.
Change the parameter using ▲ ▼	DEFAULT SETTINGS YES ↑ ↓	
Press 🔔 to confirm.	PLEASE WAIT PARAMETER CHANGED	
Exit configuration (see **"Accessing/exiting the configuration stage"**)		

2. Info

This procedure can be used to view:

- the firmware version
- the number of users stored **[NOT VIP]**
- the RS485 address **[NOT VIP]**
- call management

PROCEDURE	DISPLAY INFO	DESCRIPTION
Access configuration (see **"Accessing/exiting the configuration stage"**) Select the menu INFO	MAIN INFO Art.3072/B 1.1 ↑ ↓	Scroll through the menu using ▲ or ▼. Press 🔔 to confirm. Press 🕮 to return to the menu level above.
Scroll using ▲ ▼ Press the 🕮 key to exit the menu.		
Exit configuration (see **"Accessing/exiting the configuration stage"**)		

DATA MANAGEMENT USING 1249B [NOT VIP]

Entering a list (download)

Software Art.1249/B can be used to enter a list, on module 3072S, with the Username and Code fields in alphabetical order. The following preliminary procedures must be performed:

INITIAL CONDITION		
Module powered up in standby mode.	SELECT NAME BY ↑ ↓	
PROCEDURE	**DISPLAY INFO**	**DESCRIPTION**
Connect the cable supplied with software Art. 1249B to terminals TX / RX / - (or D / D- if you have an RS485 line).	SELECT NAME BY ↑ ↓	
Run software Art. 1249B. Consult the online product Guide for the required settings.		**On software 1249/B, the CALL MODE must be set as Standard.**
Make the list with the Username and Code fields in software Art. 1249/B, or load an existing list.	SELECT NAME BY ↑ ↓	
Press the Download button in software Art. 1249B.		
	DOWNLOAD ENDED Or: DOWNLOAD FAILED	If the download was completed successfully. If an error occurred during the download.

Reading (upload) of the stored list

Software Art.1249/B can be used to read the list, from module 3072S, with the Username and Code fields. The following preliminary procedures must be performed:

INITIAL CONDITION		
Module powered up in standby mode.	SELECT NAME BY ↑ ↓	
PROCEDURE	**DISPLAY INFO**	**DESCRIPTION**
Connect the cable supplied with software Art. 1249/B to terminals TX / RX / - (or D / D- if you have an RS485 line).	SELECT NAME BY ↑ ↓	
Run software Art. 1249/B. Consult the online product Guide for the required settings.	SELECT NAME BY ↑ ↓	
Press the Upload button in software Art. 1249/B.		
	UPLOAD ENDED Or: UPLOAD FAILED	If the upload was completed successfully. If an error occurred during the upload.

2. Navigation tree

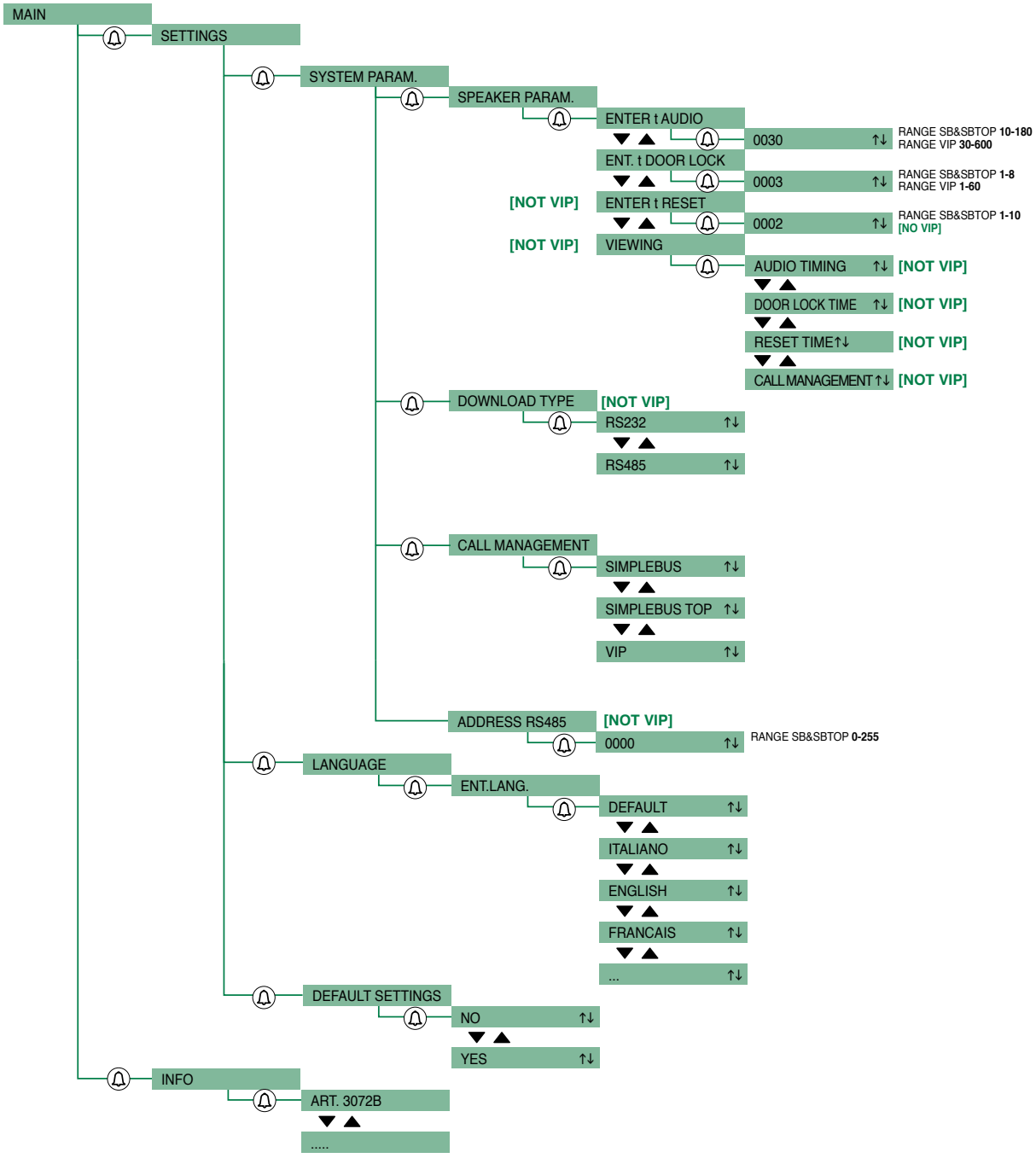

System performance and layouts

For further information of system performance and to view installation layouts, click on the system type that best meets your requirements:

- **Building Kit audio/video system** for the creation of audio-video systems for *small apartment blocks.*
- **SBTOP audio/video system** for the creation of audio-video systems for *residential complexes.*
- **SB2 audio system** for the creation of audio systems for *residential complexes.*
- **SB1 audio system** for the creation of audio systems for *residential complexes.*

Table of contents

Warning

Description 479

Technical features 480

Connections 481

- Standalone connection 481
- Connection in traditional audio systems 481
- Connection in Building Kit systems 482
- Connection in SBTOP and SB1 systems 483
- Connection in ViP systems 484

Program and Operation 485

- 1) Entering the supercode 485
- 2) Relay codes: first programming 485
- 3) Using relay codes 485
- 4) Cancelling relay codes 485
- 5) Bistable/Monostable operation 486
- 6) Anti-coercion function 486
- 7) Programming the allowed errors number 486
- 8) Programming the relay 1 activation delay for a remote key input 487
- 9) Actuator function 487

System performance and layouts 487



Electronic key module Art. 3188SB

Description

*Art. **3188SB** for mounting in Vandalcom modular keypads for mixed access control - entry panel - video entry panel installations or stand-alone applications.*

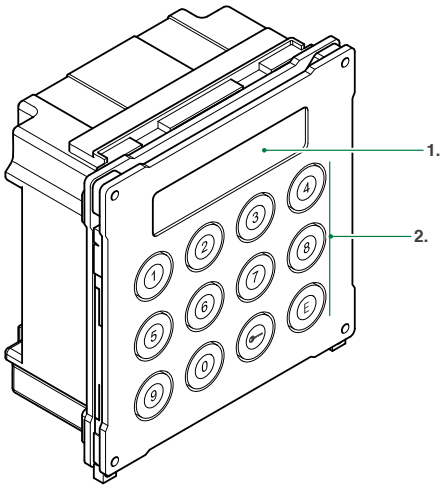

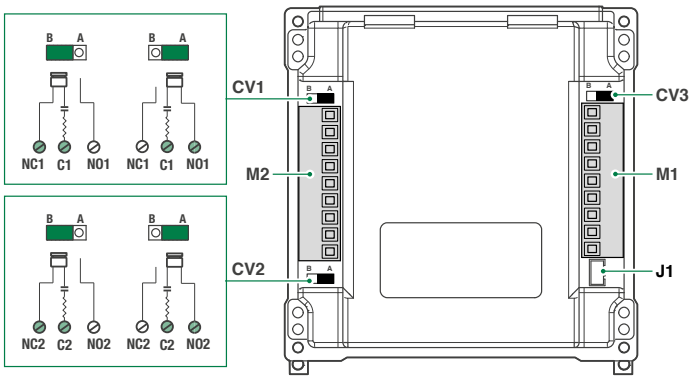

1. Indicator LED

2. Alphanumeric keys

JUMPER

CV1	RC network control for filter on relay 1 contacts
CV2	RC network control for filter on relay 2 contacts
CV3	for future uses

TERMINAL BLOCK M2

NO/2	relay 2
C/2	relay 2
NC/2	relay 2
NO/1	relay 1
C/1	relay 1
NC/1	relay 1
PGM	programming input
RK	remote key input
-	negative

TERMINAL BLOCK M1

~- ~+	power supply 12VAC / 22VDC
-	key button enable input
CK	key button enable input
+OUT	unregulated positive
AC-	anti-coercion output max 100 mA
AL-	alarm output max 100 mA
D+ D-	for future use (RS 485 line connection)

J1 Connector for Vandalcom module connection

Technical features

MAIN FEATURES	
Vandal Resistant rating (IK code)	IK10
Height (mm)	106
Width (mm)	106
Depth (mm)	56
Operating temperature (°C)	-25 ÷ 55
Supply voltage	12VAC / 22VDC
SOFTWARE/FIRMWARE SPECIFICATIONS	
Number of user codes	300
HARDWARE SPECIFICATIONS	
Visual signalling	Yes
Acoustic signalling	Yes
GENERAL DATA	
Type of finish	Steel
Colour	Steel
COMPATIBILITY	
Simplebus Top audio/video system	Yes
Building Kit audio/video system	Yes
Simplebus 2 audio system	Yes
Simplebus 1 audio system	Yes
Vip system	Yes
MOUNTING/INSTALLATION	
Flush-mounted	Yes
ELECTRICAL SPECIFICATIONS	
Absorption in stand-by (mA)	20
Absorption with 1 bistable relay activated (mA)	45
Absorption with 2 bistable relays activated (mA)	65

Connections

Standalone connection

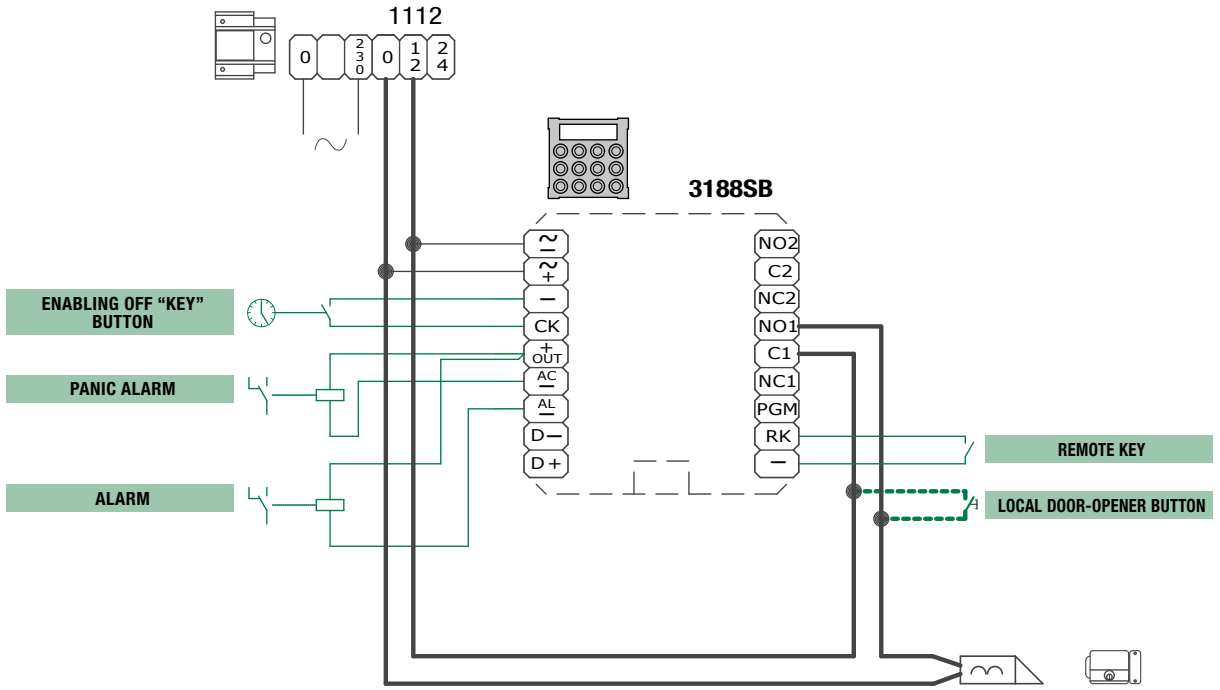

Connection in traditional audio systems

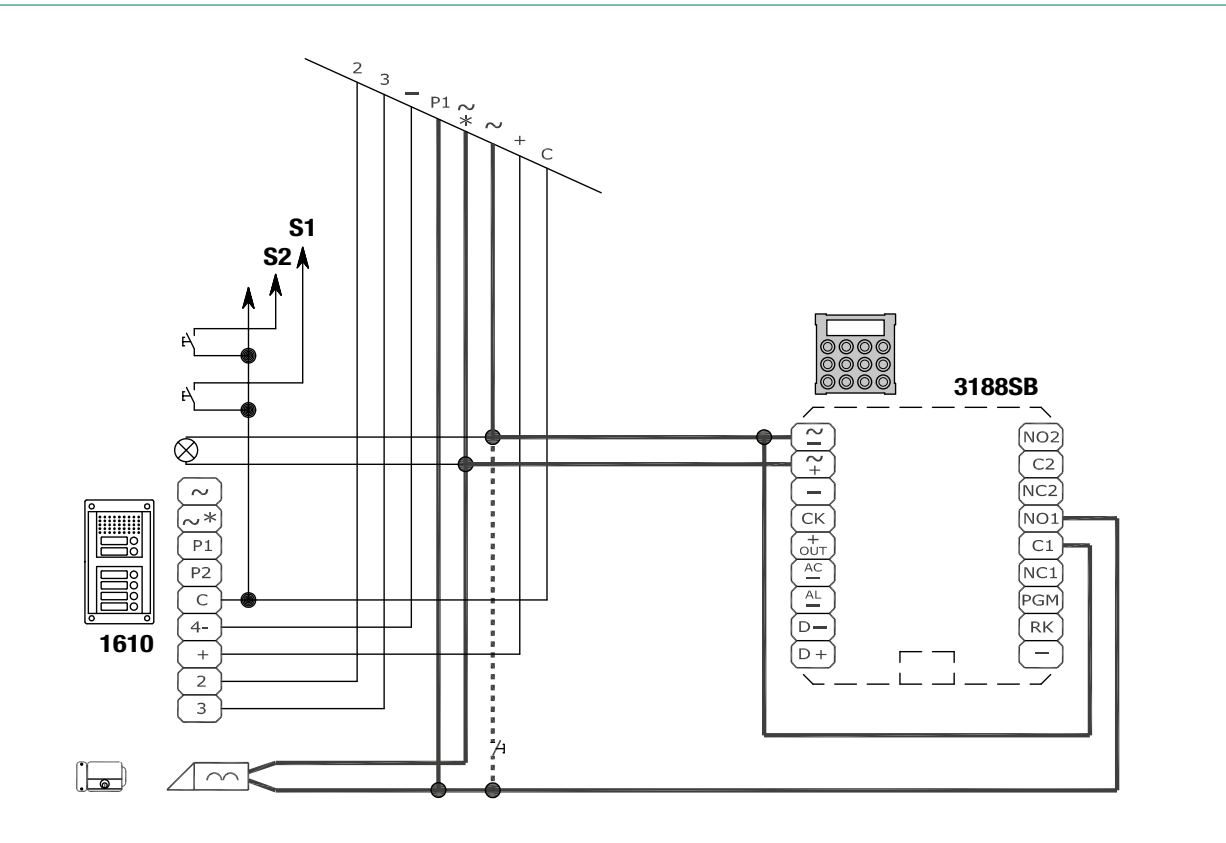

Connection in Building Kit systems

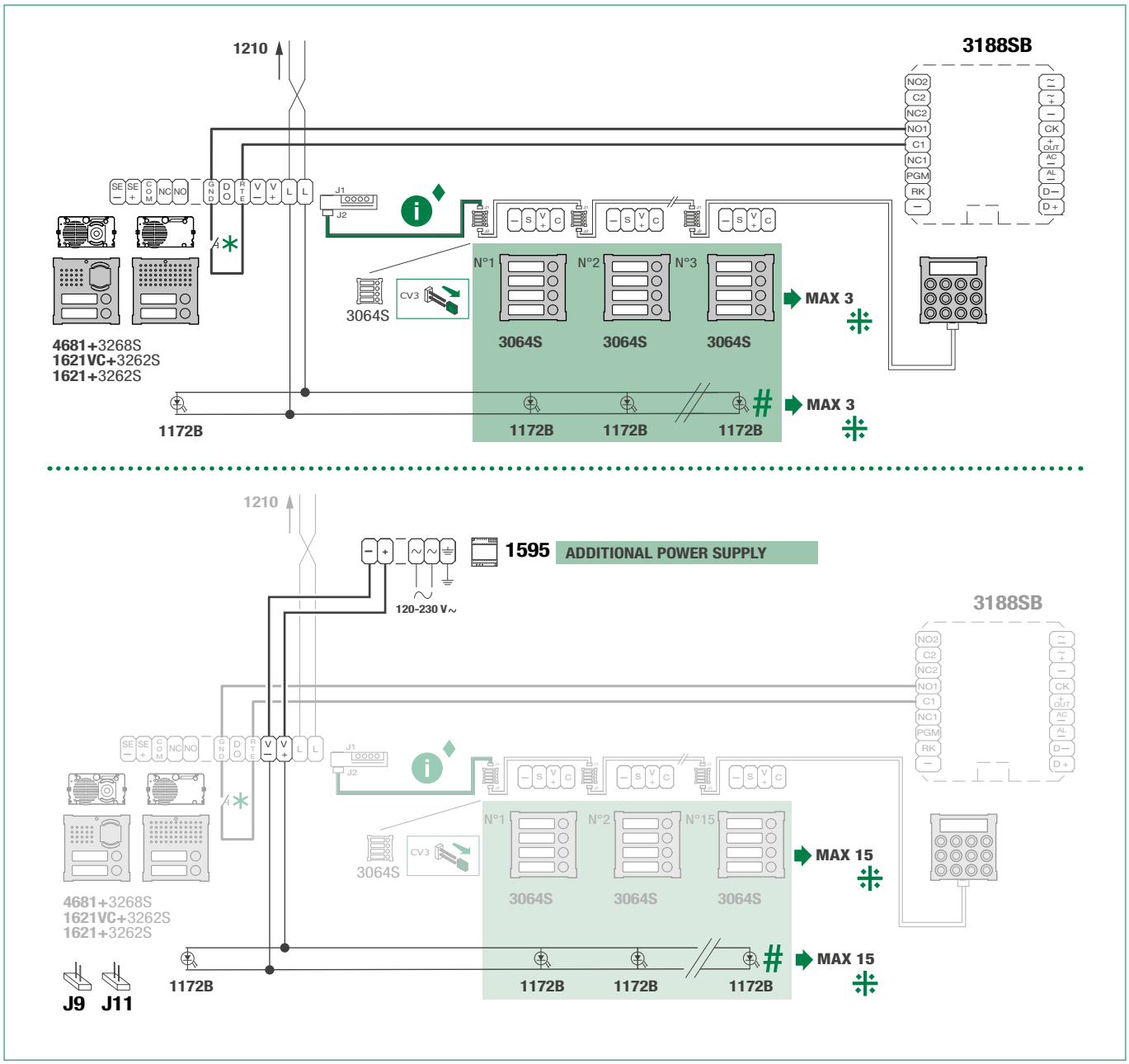

- ♦ Use the cable supplied with Art. 3262S, Art. 3268S
- ✳ Max 20m. Local lock-release button.
- ⌗ Max 3 modules. Max 15 modules with additional power supply.
- # Use bulb Art. 1172B for nameplate lighting. The bulb is polarised.

Connection in SBTOP and SB1 systems

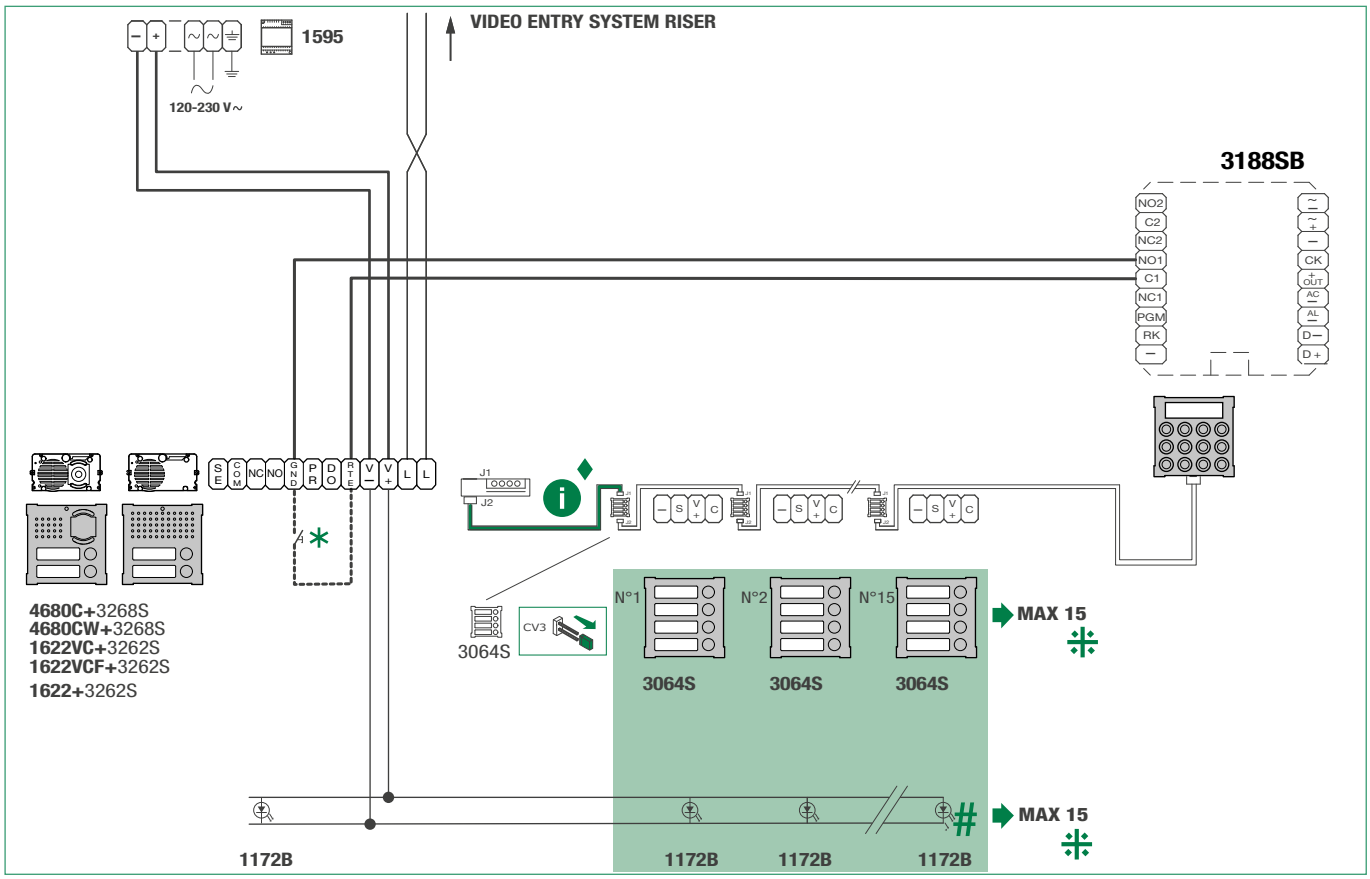

- ♦ Use the cable supplied with Art. 3262S, Art. 3268S
- ✳ Max 20m. Local lock-release button.
- ⁜ Max 15 modules.
- # Use bulb Art. 1172B for nameplate lighting. The bulb is polarised.

Connection in ViP systems

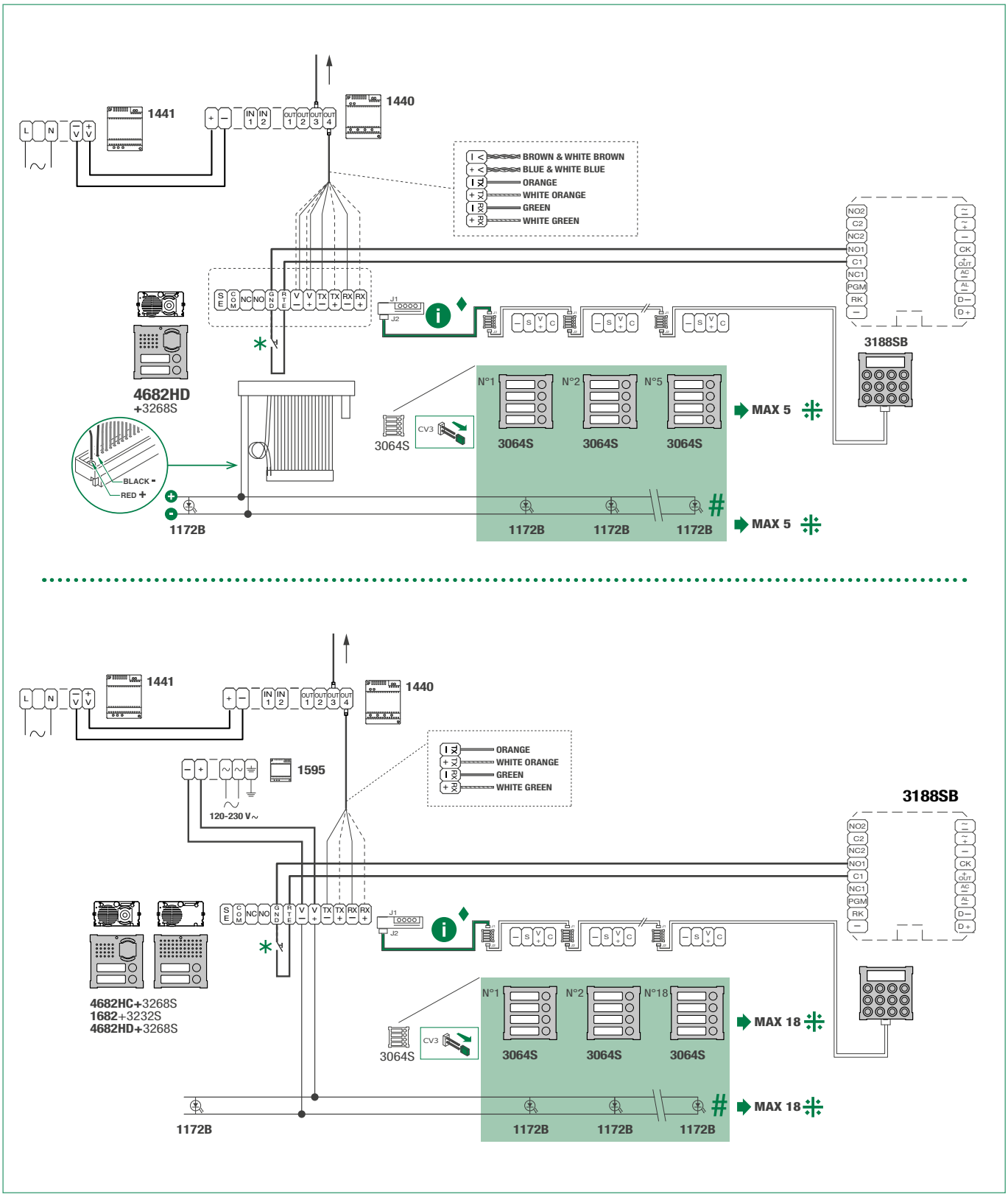

♦ Use the cable supplied with Art. 3262S, Art. 3268S

∗ Max 20m. Local lock-release button.

⁜ Max 5 modules. Max 18 modules with additional power supply.

Use bulb Art. 1172B for nameplate lighting. The bulb is polarised.

Program and Operation

There is a timeout for programming procedures after which the operation is cancelled (around 40" between successive keystrokes); we recommend familiarising yourself with the procedure before starting it.

1) Entering the supercode

Programming the supercode is the first operation, because all subsequent steps depend on it.

We recommend using a short, easy to remember supercode, or noting it down on a sheet of paper.

Entering the supercode

1. Power up the key which has been cabled but is still open.
2. Insert a jumper between PGM and the negative.
3. Check that the red LED has lit up.
4. Enter the supercode (1 to 8 digits).
5. Press **"E"** to store the code.
6. Wait for 10 seconds or for the confirm tone to sound.
7. Remove the jumper.

Example:

to enter supercode 12345, proceed as follows:

- power up;
- fit the jumper;
- enter in sequence 1 2 3 4 5 E;
- wait for 10 seconds or for the confirm tone to sound; remove the jumper.

- **If you make an error in entering the code, press the "key" button several times to cancel the operation.**
- **You must always enter "E" at the end of the operation, whether during programming or normal use.**
- **Modifying or changing the supercode resets all other programmed settings (including relay codes).**
- **The supercode cannot be reset to a default value, but only replaced.**

2) Relay codes: first programming

To program the relay codes, you must first know the supercode. The red LED on the keypad stays on during the programming procedure.

In case of error, it flashes briefly and then turns off, after which you must start again from the beginning of the procedure.

Relay codes: first programming procedure

1. Enter **"0"** and **"E"** (start programming procedure code).
2. Check that the red LED has lit up.
3. Enter the **supercode** (entered in point 1) followed by **"E"**.
4. Enter the relay ID **number** (1 or 2) followed by **"E"**.
5. Enter the operating mode (see point 5), then **"E"**.
6. Enter the **new code** followed by **"E"**.
7. The LED should now turn off.

Example:

To enter code 55127 for relay 1 in bistable mode (on/off), make the following keystrokes:

0 E start procedure

12345 E supercode

1 E relay 1 ID

0 E bistable operating mode

55127 E new code

3) Using relay codes

After programming is completed, you can activate relay 1 by simply entering: 55127 E. In this example, the operating mode has been set to 0, in other words, bistable (on/off).

To activate monostable operation, refer to point 5.

Up to 300 codes can be set relay 1 or relay 2. If you attempt to enter a code which has already been stored, an error is indicated.

4) Cancelling relay codes

The following procedure cancels stored codes from memory:

1. Enter **"0"** and **"E"** (start programming procedure code).
2. Check that the red LED has lit up.
3. Enter the **supercode** (entered in point 1) followed by **"E"**.
4. Enter **"0"** (cancel code) followed by **"E"**.
5. Enter the **code** to be cancelled, followed by **"E".**
6 The LED should now turn off.

Example:

to cancel code 55127, enter in sequence:

0 E start procedure

12345 E supercode

0 E cancel

55127 E code to be cancelled

5) Bistable/Monostable operation

The relays can be programmed to operate in bistable (on/off) or monostable (timed) modes (the period of activation can also be set in the latter case).

Bistable mode:

entering the value **"0"** sets the relay to activate when the code is first entered, then de-activate when it is next entered.

Monostable mode:

entering a value in the range **1** to **99** sets the relay to activate when the code is entered and de-activate automatically once the specified period of time (1 to 99 seconds) has expired.

Modifying relay timing

To modify the relay timing, first cancel the relay code as explained in point 4 and then enter another one.

Example:

if relay 1 was activated with code 55127 in bistable mode, proceed as follows to change its mode to monostable:

1. Cancel the code by entering in sequence:

0 E start procedure

12345 E supercode

0 E cancel

55127 E code to be cancelled

2. Re-enter the code with the desired operating mode:

0 E start procedure

12345 E supercode

1 E identification

5 E monostable mode, 5" delay

55127 new code

After this, relay 1 will activate on entry of code 55127 in monostable mode for 5".

6) Anti-coercion function

When the operator must be able to send an alarm without being noticed, the anti-coercion function can be activated. The anti-coercion function, composed of a single digit, must be entered after one of the relay codes, and activates not only the relay in question, but also the timed anti-coercion output (5") (output AL+).

Programming the anti-coercion function:

1. Enter **"0"** and **"E"** (start programming procedure code)
2. Check that the LED has lit up
3. Enter the **supercode** (see point 1), then **"E"**
4. Enter **"4"** (select anti -coercion function), then **"E"**
5. Enter the **anti-coercion code** (1 digit from 1 to 9), then **"E"**
6. The LED should now turn off

Example:

to set an anti-coercion code of 3, enter in sequence:

0 E start procedure

12345 E supercode

4 E anti-coercion function

3 E anti-coercion code

Now, when the relay code is followed by the anti- coer cion code, the output relay as well as the anti-coercion output will both be activated (the latter timed to 5" approx): 71032 3 E.

- **The anti-coercion code MUST be entered after the relay code and before the final E.**
- **When the anti-coercion function is activated, the relay code may not be more than 7 digits long.**
- **The relay code may not terminate with the digit selected for the anti-coercion function activation code.**
- **The anti-coercion output is of the open collector type (100 mA max).**

7) Programming the allowed errors number

This allows you to set the number of code entry errors allowed before the locking function is activated. If, for example, you set a value of 3, on the third incorrect code entry the key is locked for a period of 1 minute. You can also send an alarm signal (output **AL**), after the allowed number of errors, if this is provided for during programming. To send the alarm, program **"1"** during the procedure, otherwise program **"0"** (see below).

An incorrect code entry is the entry of a code not stored during programming, followed by **"E".**

Programming the allowed errors number

1. Enter **"0"** and **"E"** (start programming procedure code)
2. Check that the LED has lit up
3. Enter the **supercode** (see point 1), then **"E"**
4. Enter the number **"5"** (error lock function) followed by **"E".**
5. Enter the allowed number of errors (1-9), but **DO NOT** enter **"E"**.
6. Enter: **"1" "E"** to send an alarm when the key is locked; **"0" "E"** if you do not wish to send an alarm.
7. The LED should now turn off

Example:

to program key locking after 3 errors without sending an alarm, enter in sequence:

0 E start procedure

12345 E supercode

5 E error function

3 number of allowed errors

0 E do not send alarm

8) Programming the relay 1 activation delay for a remote key input

This procedure sets the activation time for relay 1 on a remote input. Values from 1 to 99 can be set.

The default timing is 5 seconds.

Example:

To set the activation time to 10 seconds, enter in sequence:

0 E start procedure

12345 E supercode

6 E Remote Key timing function

10 E relay activation time

9) Actuator function

One of the relays of 3188SB can be used on the generic actuator command originating from the Simplebus Bus. Special programming is required on the external unit as described in the manuals for Art. 4680C, 1622, 4681, 1621, 4682HC, 4682HD, 1682.

Programming the actuator function:

1. Enter **"0"** and **"E"** (start programming procedure code)
2. Check that the LED has lit up
3. Enter the supercode (see point 1), then **"E"**
4. Enter the number **"7"** ("actuator" function) followed by **"E"**.
5. Enter the number of the relay to be associated with the command (1-2) followed by "E".
6. Enter a number from 1 to 99 to indicate the monostable mode seconds value, or enter **"0"** if you want bistable mode, followed by **"E"**.
7. The LED should now turn off.

Cancelling the actuator function:

1. Enter **"0"** and **"E"** (start programming procedure code)
2. Check that the LED has lit up
3. Enter the supercode (see point 1), then **"E"**
4. Enter the number **"7"** ("actuator" function) followed by **"E".**
5. Enter **"0"** and **"E"**
6. The LED should now turn off

Example:

Programming the actuator function:

0 E	start procedure
12345 E	supercode
7 E	actuator function
1 E	relay number
10 E	relay closure time

ENABLING THE "KEY" BUTTON

Short-circuiting terminals **CK** and **-**, for example via a timer, makes it possible

to activate relay 1 without entering the relay code but by simply pressing the "key" button.

REMOTE KEY INPUT (RK)

Closing this contact with ground activates relay 1 for the set time (see point 8).

The contact can be connected remotely up to 20 m max.

System performance and layouts

For further information of system performance and to view installation layouts, click on the system type that best meets your requirements:

- **Building Kit audio/video system** for the creation of audio-video systems for *small apartment blocks.*
- **SBTOP audio/video system** for the creation of audio-video systems for *residential complexes.*
- **SB2 audio system** for the creation of audio systems for *residential complexes.*
- **SB1 audio system** for the creation of audio systems for *residential complexes.*

Table of contents

Warning

Description 489

Installation 491

Connections 493

- Building Kit system 493
- Simplebus Top system 494

Button programming 494

Special function programming 495

System performance and layouts 495

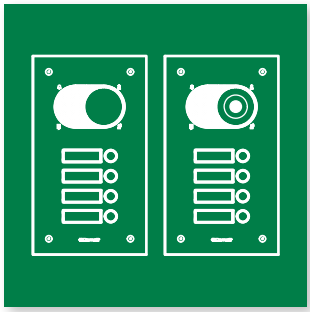

Switch series entrance panel

Description

Monolithic entrance panel in 2.5 mm thick stainless steel. Available in versions with 1 to 33 buttons.
Installation with flush-mounted box or surface-mounted housing (sold separately from the front entrance panel).
Equipped with 1250U adapter required to accommodate the audio or audio/video unit, to be purchased separately.
IK protection rating: IK08.

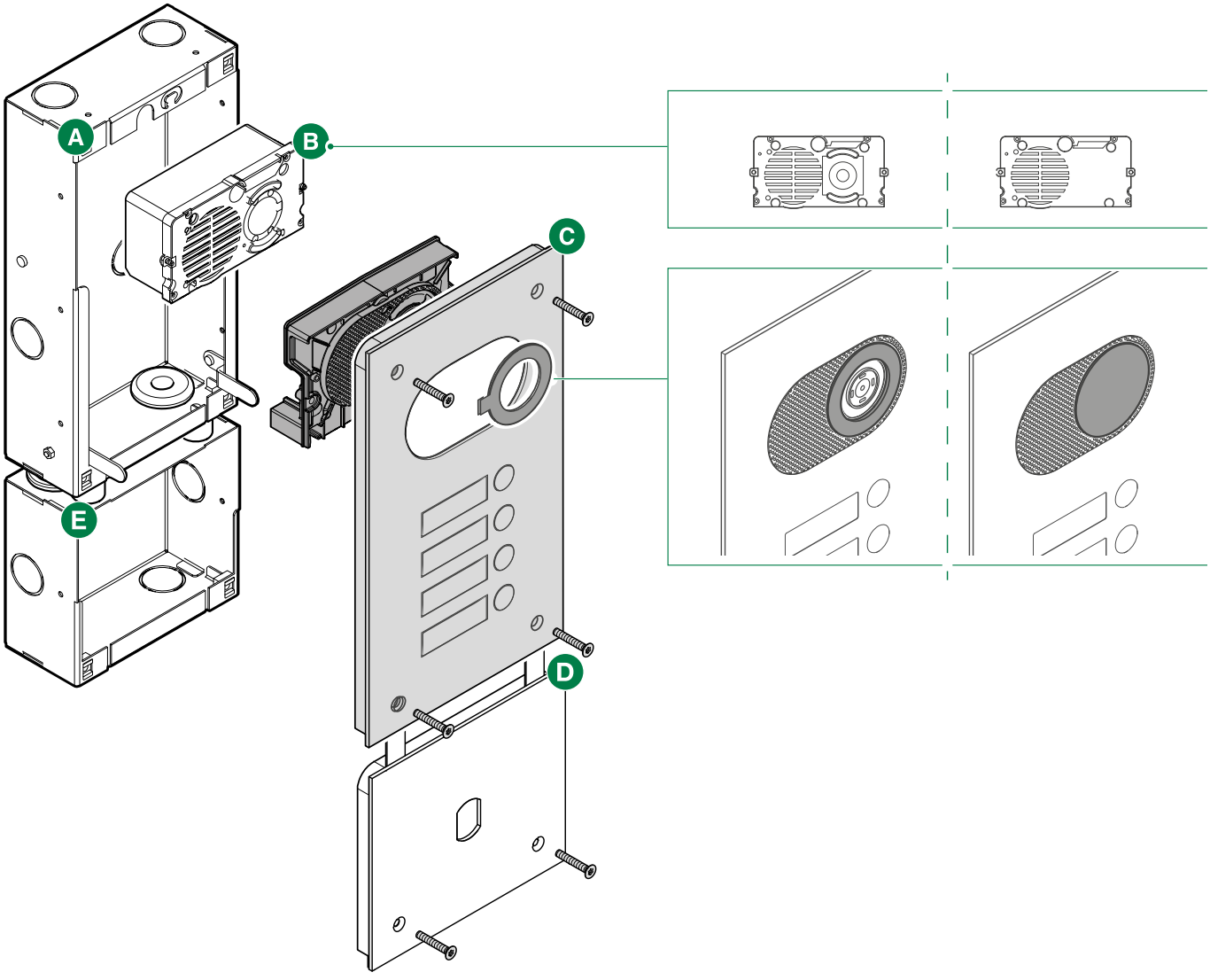

A

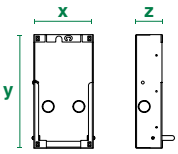

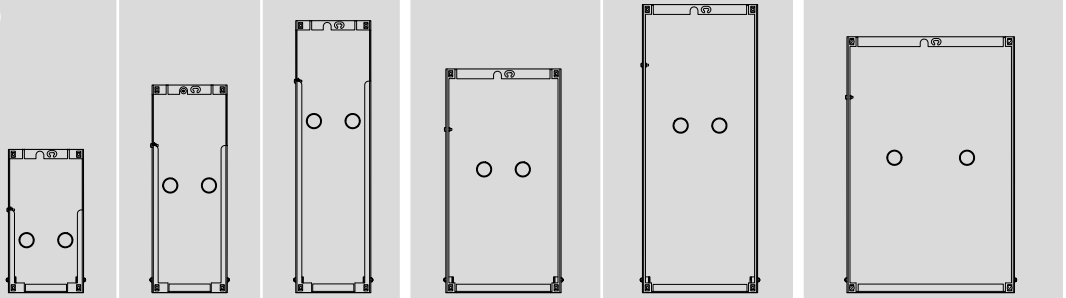

	IX9150	IX9151	IX9152	IX9153	IX9154	IX9155
x	124 mm			190.4 mm		276.9 mm
y	236.7mm	343.1 mm	449.5 mm	369.7mm mm	476.1mm	422.9 mm
z	56 mm					

C

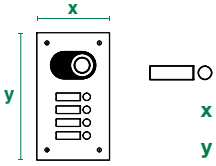

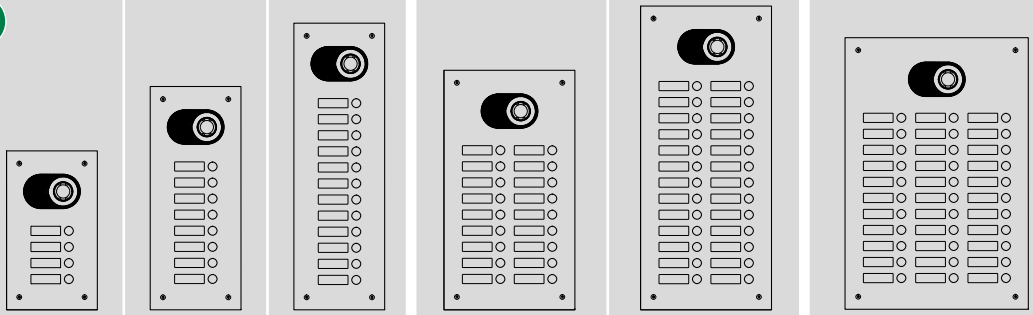

	IX0101 IX0102 IX0103 IX0104	IX0105 IX0106 IX0107 IX0108	IX0109 IX0110 IX0111 IX0112	IX0212 IX0214 IX0216 IX0218	IX0220 IX0222 IX0224 IX0226	IX0324 IX0327 IX0330 IX0333
	1-2-3-4	5-6-7-8	9-10-11-12	12-14-16-18	20-22-24-26	24-27-30-33
x	150 mm			216,4 mm		302,9 mm
y	262.7 mm	369.1 mm	475.5 mm	395.7 mm	502.1 mm	448.9 mm

E

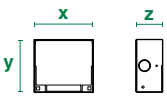

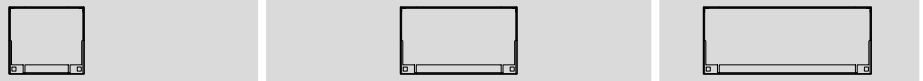

	IX9156	IX9157	IX9158
x	124 mm	190.4 mm	276.9 mm
y	110.5 mm		
z	56 mm		

D

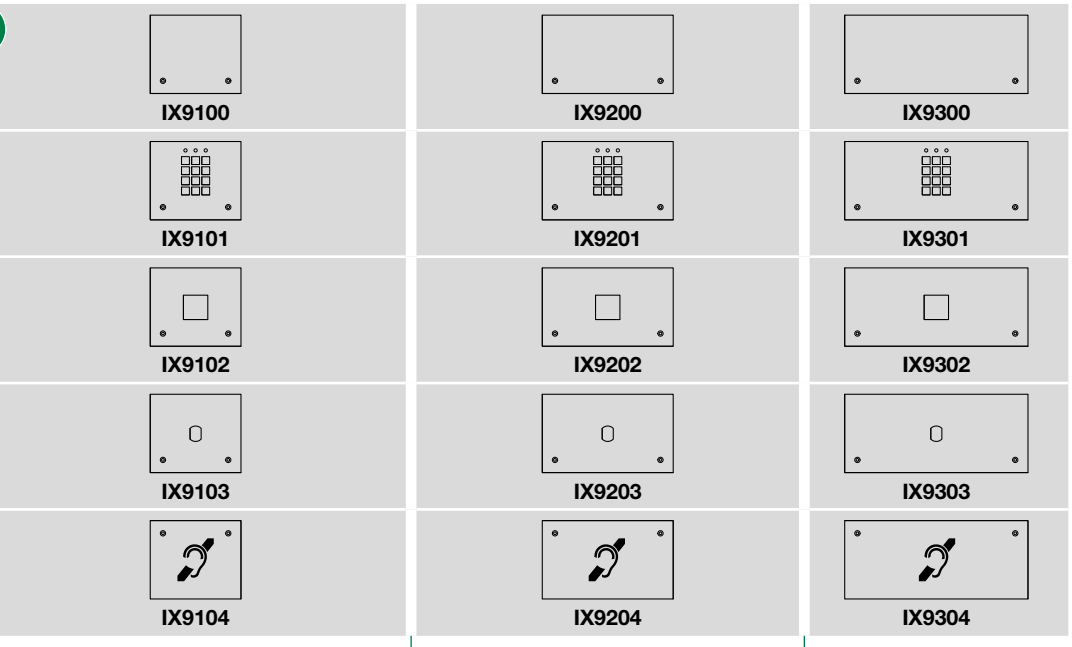

	IX9100	IX9200	IX9300
	IX9101	IX9201	IX9301
	IX9102	IX9202	IX9302
	IX9103	IX9203	IX9303
	IX9104	IX9204	IX9304
x	150 mm	216,4 mm	302,9 mm
y	129.5 mm		

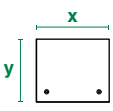

Installation

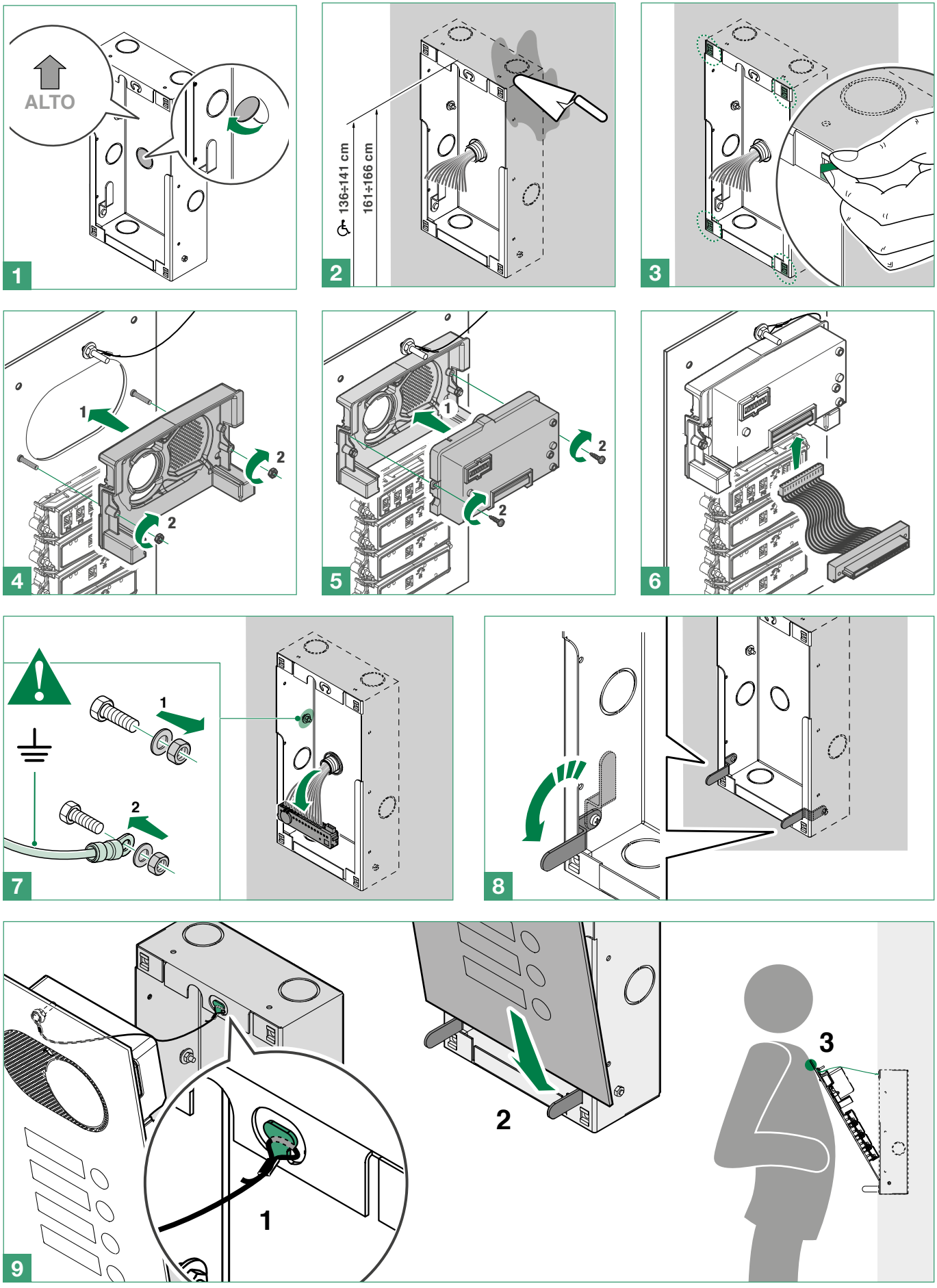

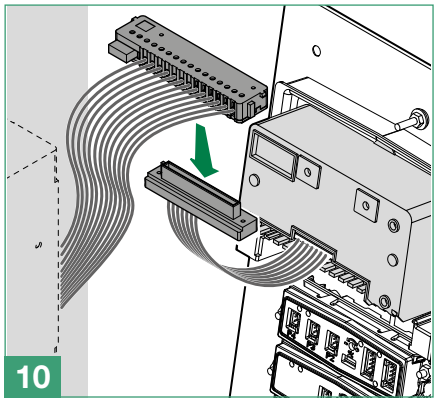

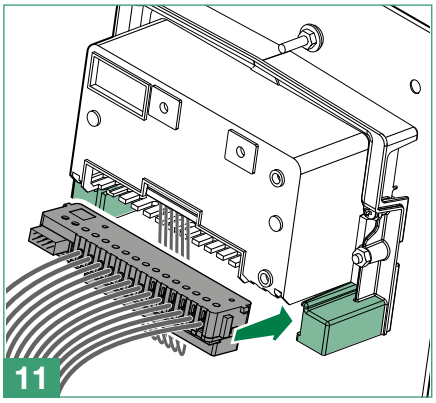

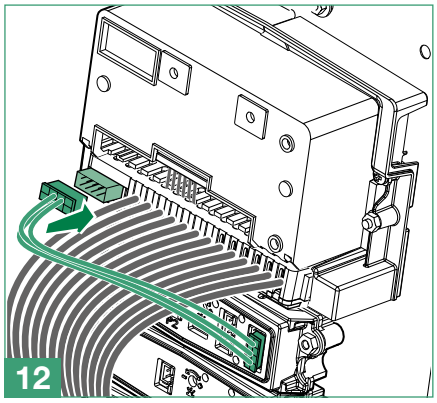

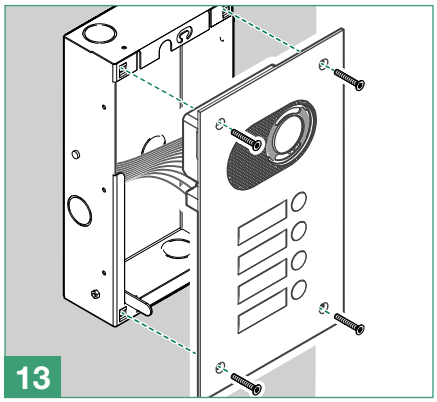

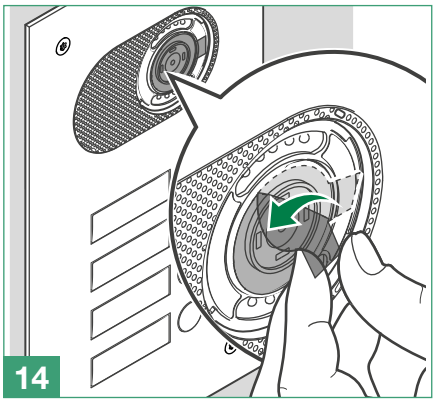

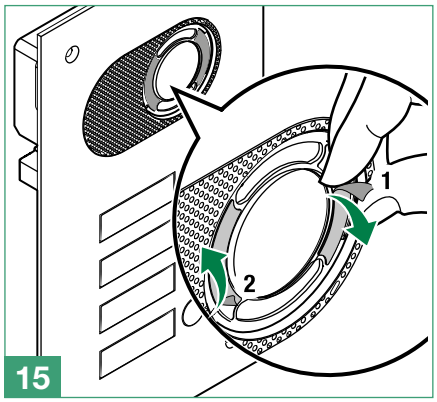

A) Art. 4681, 4680C e 4682HD

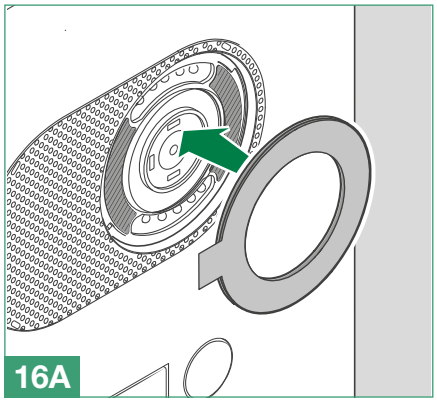

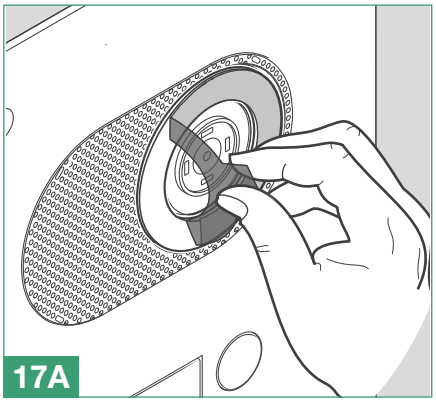

B) Art. 1621, 1621VC, 1622 e 1682

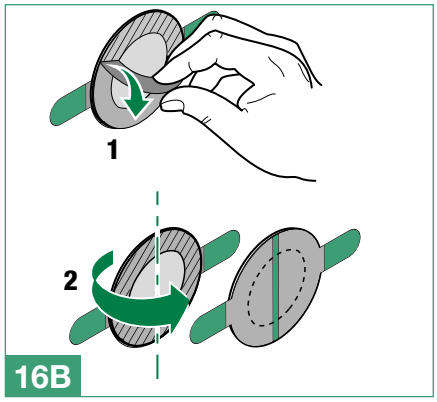

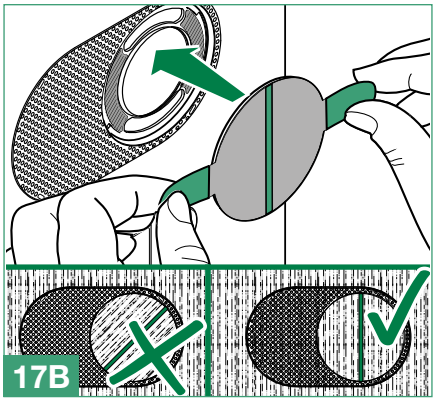

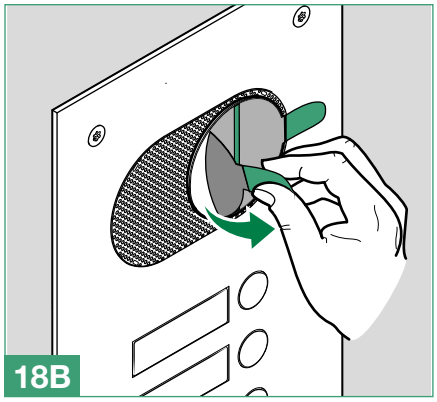

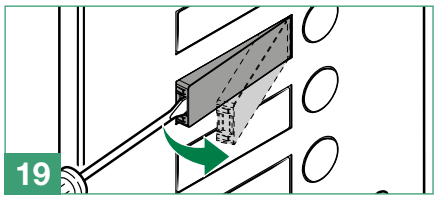

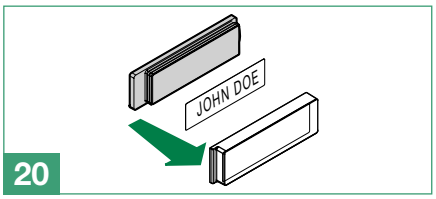

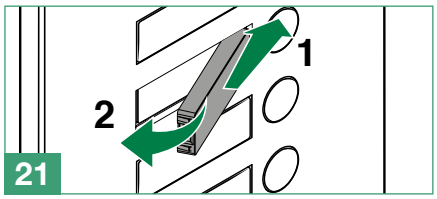

Connections

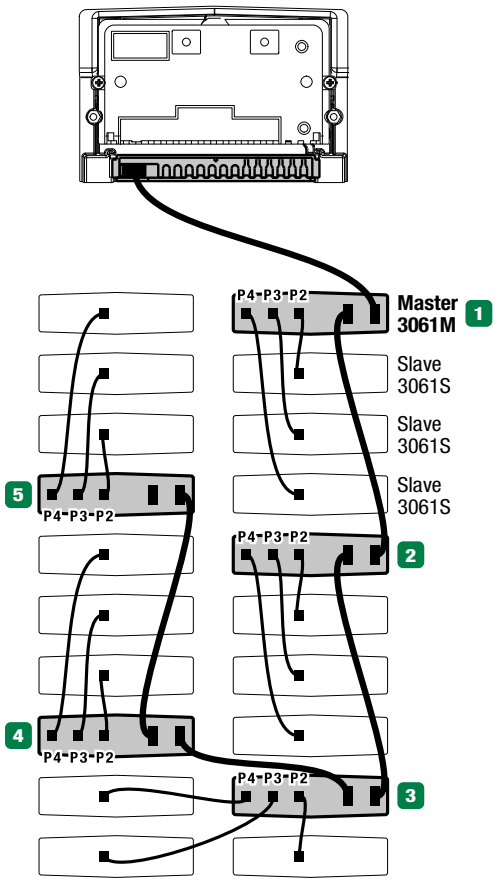

Building Kit system

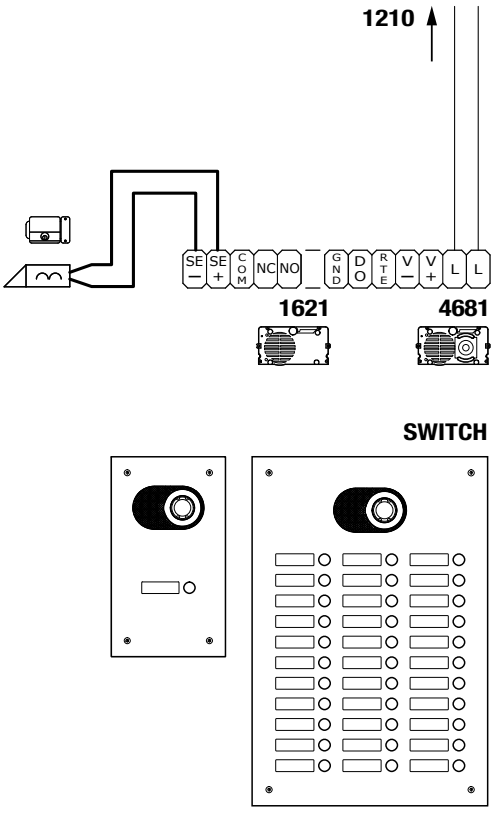

Simplebus Top system

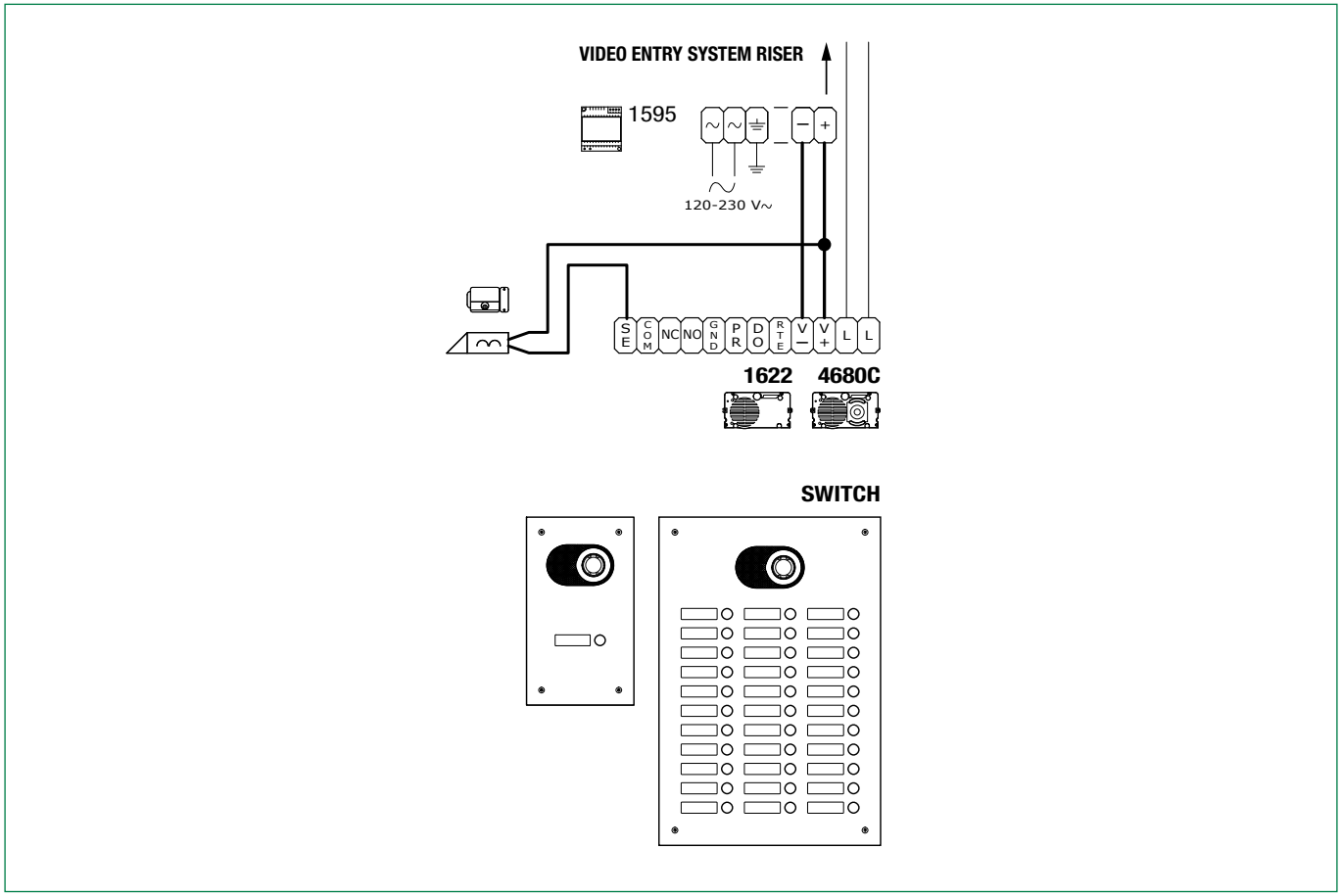

Button programming

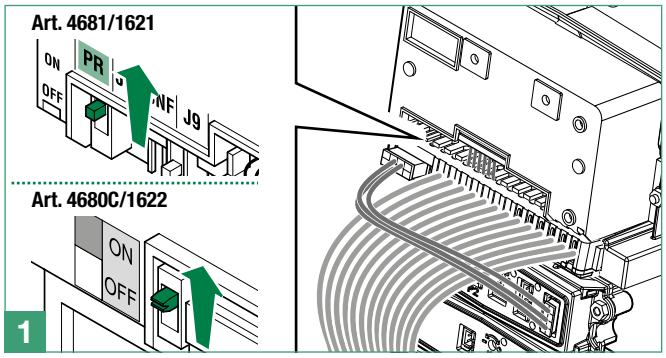

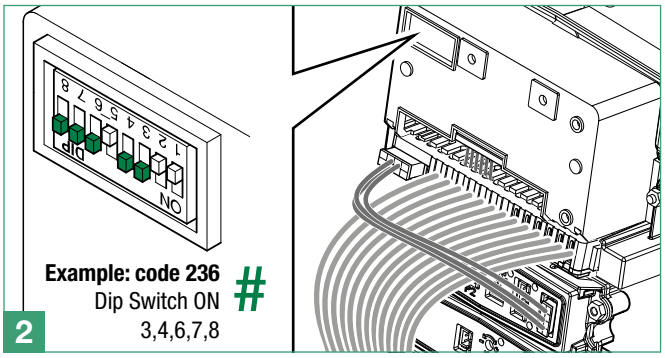

Set the user code using the dip switches; see **"addressing table"**. Repeat steps **2** and **3** to address each button.

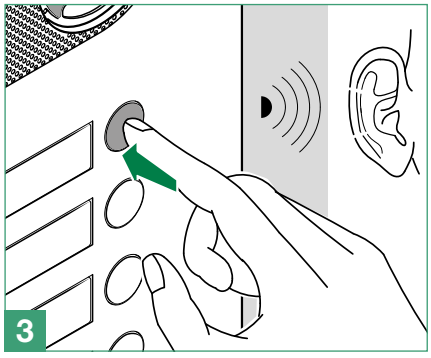

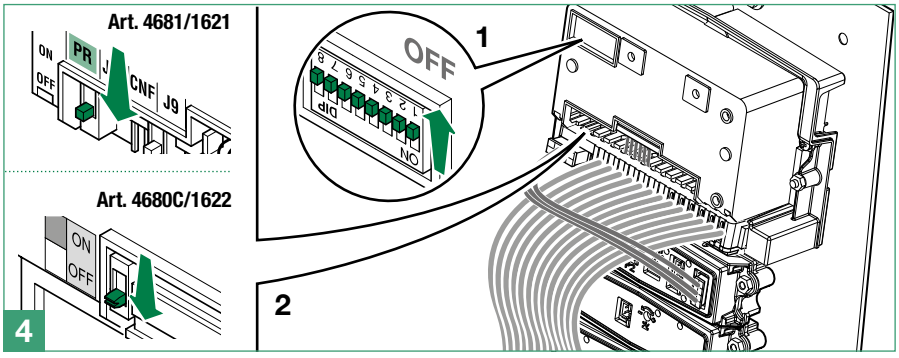

Special function programming

When programming the special functions, refer to the manuals for audio modules 1621 and 1622, and for audio/video modules 4681, 1621VC and 4680C.

System performance and layouts

For further information of system performance and to view installation layouts, click on the system type that best meets your requirements:

- **Building Kit audio/video system** for the creation of audio-video systems for *small apartment blocks.*
- **SBTOP audio/video system** for the creation of audio-video systems for *residential complexes.*
- **SB2 audio system** for the creation of audio systems for *residential complexes.*
- **SB1 audio system** for the creation of audio systems for *residential complexes.*

Table of contents

Warning

Description **497**
Technical characteristics **498**
Installation **499**
Mounting keypad panel **501**
Installation information **501**
Connections **502**
Variants **502**
Module connection **503**
Simplekey modules **503**
Connection to a computer via Art. MOXA TCC-80 20022618 ..... **503**
Programming **504**
System performance and layouts **506**
General description **507**
MAIN FEATURES **507**
EXTERNAL DATA MANAGEMENT **507**
Use **507**
NAVIGATION MODE **507**
ENTERING SPECIAL CHARACTERS **507**
FEEDBACK **508**
Self-testing **508**
SETTING THE LANGUAGE **508**
SETTING THE TYPE OF DOWNLOAD **508**
Programming menu **509**
ACCESSING THE PROGRAMMING MENU **509**
1. Data management **509**
1.1. Names **509**
1.1.1 ENTER NAMES 509
1.1.2 CHANGE NAMES 510
1.1.3 DELETE NAMES 511
1.1.4 CLEAR ALL NAMES 511
1.2. PASSWORD **511**
1.2.1 ENTER PASSWORD 511
1.2.2 CHANGE PASSWORD 511
1.2.3 DELETE PASSWORD 512
1.2.4 CLEAR ALL PASSWORDS 512
1.3. DIGITAL KEYS **512**
1.3.1 ENTER KEY 512
1.3.2 CHANGE KEY 512
1.3.3 DELETE KEY 512
1.2.3 CLEAR ALL KEYS 513
1.4. SUPERCODE **513**
1.4.1 ENTER NEW CODE 513
1.4.2 DEFAULT SETTINGS 513
2. Settings **513**
2.1. TYPE OF DOWNLOAD **513**
2.2. SYSTEM PARAMETERS **513**
2.2.1 SPEAKER PARAMETERS 513
2.2.1.1 Enter Audio Time 513
2.2.1.2 Enter Door Lock Time 513
2.2.1.3 Enter Reset Time 513
2.2.1.4 View 514
2.2.1.5 Advanced Options 514
2.2.2 RS485 ADDRESS 517
2.2.2.1 RS485 Address 517
2.3. SELECT LANGUAGE **517**
2.4. SECOND LANGUAGE **517**
2.5. CALL MANAGEMENT **518**
2.6. ACCESS CONTROL **519**
2.7. NAME ONLY **519**
2.8. WELCOME MESSAGE **519**
2.8.1 CHANGE 519
2.8.2 ENABLE 520
2.8.3 STATIC MESSAGE 520
2.9 SCREENSAVER **520**
2.10 KEYPAD SENSITIVITY **520**
2.11 KEYPAD TONE **520**
2.12 PROXIMITY SENSOR **520**
2.13 BRIGHTNESS **521**
2.14 WEB SERVER **521**
2.14.1 VIEW 521
2.14.2 DEFAULT SETTINGS 521
2.15 DEFAULT SETTINGS **521**
3. Info **522**
External data management **522**
SOFTWARE 1249B **522**
INSTALLING THE USB DRIVER FOR CONNECTION TO A PC 522
USING THE DIRECTORY VIA SOFTWARE ART. 1249B 522
MULTIDOWNLOAD 523
WEB SERVER **523**
CONNECTION TO THE WEB SERVER VIA ETHERNET 523
LOCAL CONNECTION TO THE WEB SERVER 524
REMOTE CONNECTION TO THE WEB SERVER 524
PORT FORWARDING SETTING FOR REMOTE CONNECTION 524
ASSIGN A PUBLIC STATIC IP ADDRESS TO YOUR ROUTER 524
ASSIGN A DYNAMIC DNS ADDRESS TO YOUR ROUTER 524
USE OF THE WEB SERVER **525**
CONFIGURATION 525
DATA MANAGEMENT 525
Name Management 526
Password Management (only with Access Control deactivated) ..
526
Add Name 527
Add Password (only with Access Control deactivated) 527
Edit Name 528
Edit Password (only with Access Control deactivated) 528
Message Management 529
SETUP 530
UPDATE 531

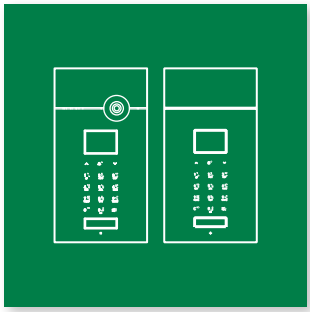

Audio/video entrance panel Art. Art. 3451S
Audio entrance panel Art. Art. 3451AS

Description

Flush-mounted entrance panel (fitted level with the wall) and 3 mm thick stainless steel plate. Certified as IK08. Complete with 128x64 dot LCD graphic display and 15 buttons integrated into the plate, with no mechanical movement. Also functions as an electronic key code. Two search buttons are used to scroll though the names; alternatively, the first letter of the required name can be entered. Once the desired username is displayed, simply press the call button. The call can also be made by directly entering the user code. It can also be used to customise an initial welcome message and can operate with a dual user interface language. Fitted with rfid reader for local door lock control and an additional relay for various uses. It can be used in conjunction with Simplekey electronic keys for automatic updating of names in the directory. It saves up to 4000 user names, 4000 lock-release passwords and 4000 rfid keys. Users and settings are simple to program using PC software art. 1249B (included, with USB connection cable) via a USB or RS485 port, locally on the digital module itself or, thanks to the integrated web server, remotely via connection to the ethernet port.

- *Art. 3451AS can be used SB1 audio systems*
- *Art. 3451S can be used SBTOP audio/video systems*

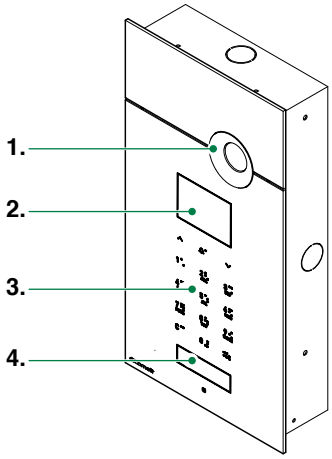

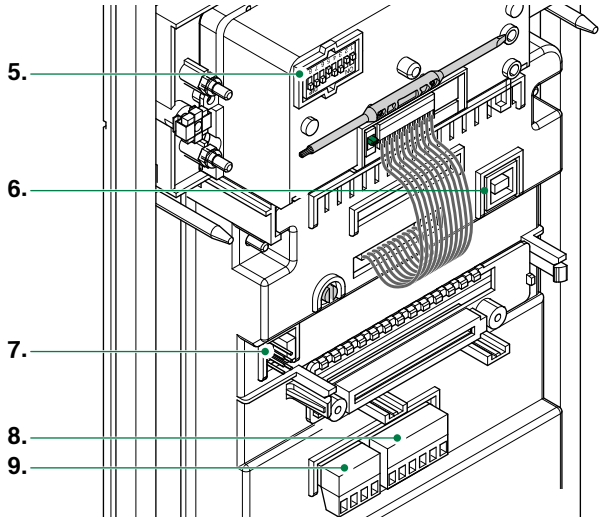

Connection terminal

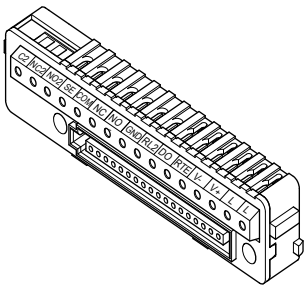

1. Camera (only Art.3451S)

2. 128X64 dots/pitch LCD display

3. Alphanumeric keypad with Braille script

4. RFID sensor

5. Programming dip switch

6. USB input for downloading / uploading data

7. **CV1** for filter on C.NC.NO contact
CV2 for accessing the programming phase

8. Terminal block for RS485 connection: 12V, 0V, D1+, D1-, D2+, D2- for downloading data via 485.

9. Ethernet connection terminal block for Webserver access.

Description of connection terminal

LL bus line connection
V+V- external unit power supply
RTE timed request to exit button input
DO door open indication input
RL2 for future use
GND negative terminal
NO, NC, COM relay contacts
SE electric lock connection
NO2, NC2, C2, for future use

Technical characteristics

	Art. 3451S	Art. 3451AS
MAIN FEATURES		
Flush-mounted	Yes	Yes
Wall-mounted	Yes	Yes
Horizontal resolution (TVL)	420	-
S/N ratio (dB)	48	-
Maximum current absorption (mA)	400	-
Loudspeaker volume control	Yes	Yes
Operating temperature (°C)	-25÷ 55	-25÷ 55
Vandal Resistant rating (IK code)	IK08	IK08
FUNCTIONS		
Key button function	Yes	Yes
HARDWARE SPECIFICATIONS		
Visual signalling	Yes	Yes
Acoustic signalling	Yes	Yes
Sensitive Touch technology	Yes	Yes
GENERAL DATA		
Product height (mm)	342	342
Product width (mm)	182	182
Product depth (mm)	3	3
COMPATIBILITY		
Simplebus Top audio/video system	Yes	-
Simplebus 1 audio system	Yes	Yes

Installation

Use the polystyrene blocks included in the packaging.

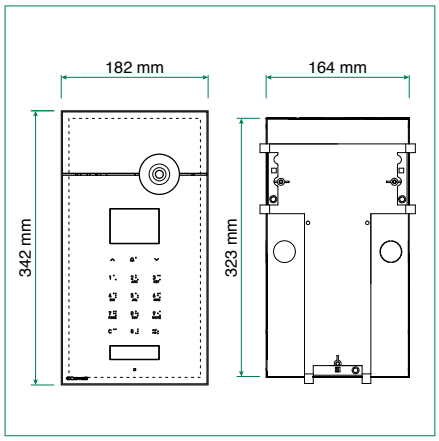

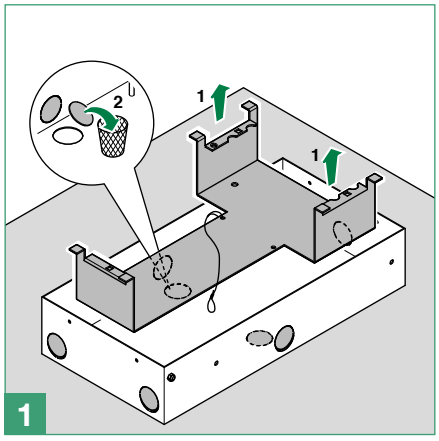

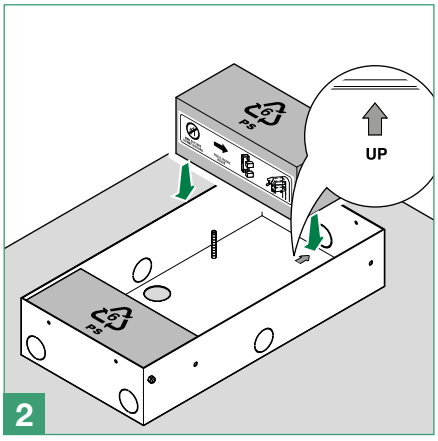

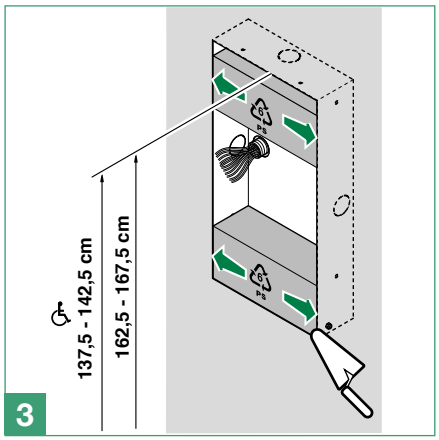

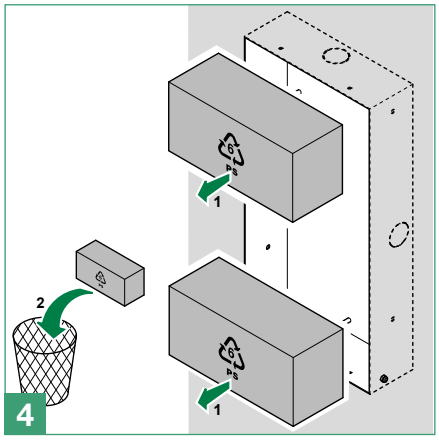

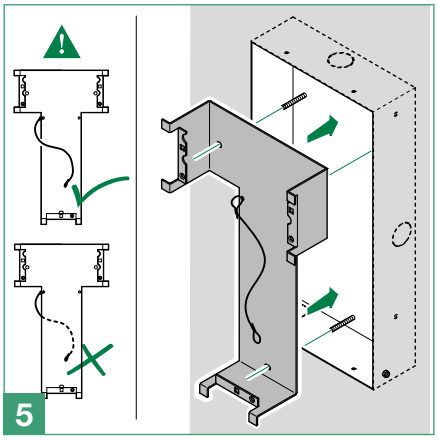

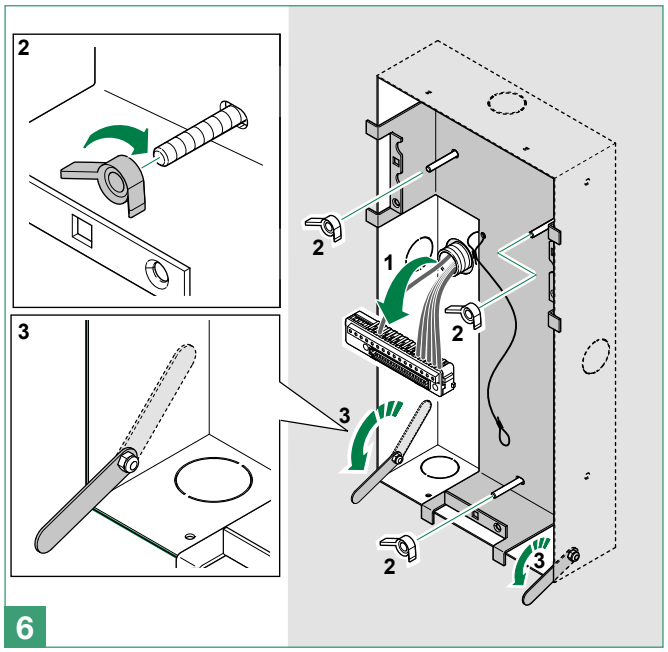

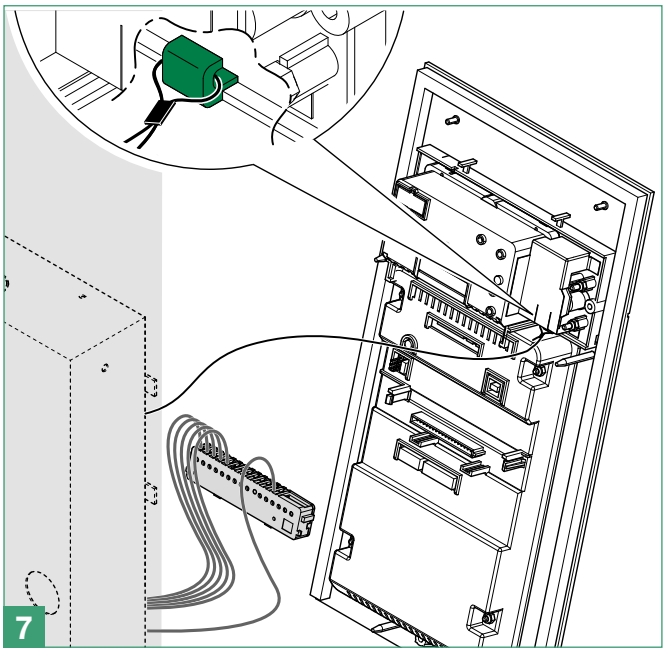

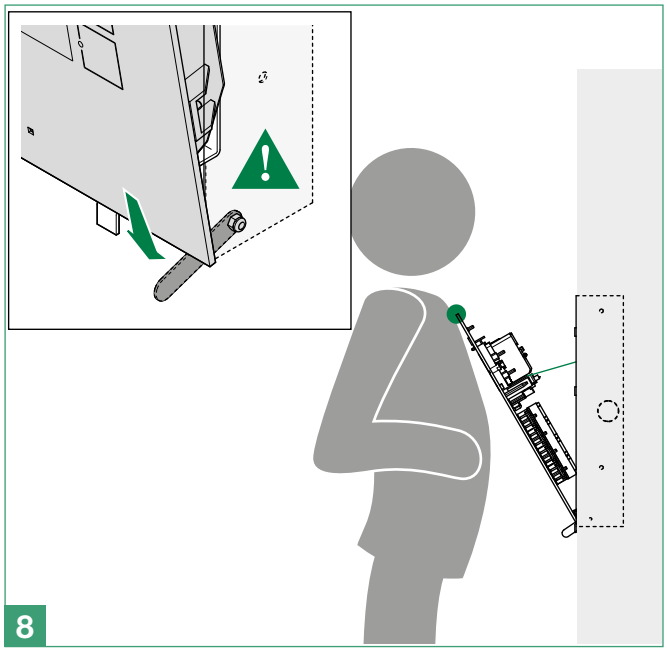
8

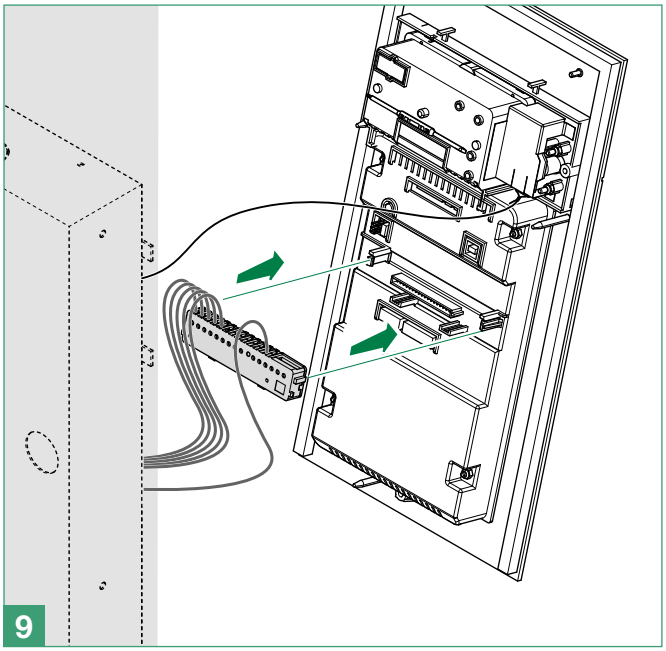
9

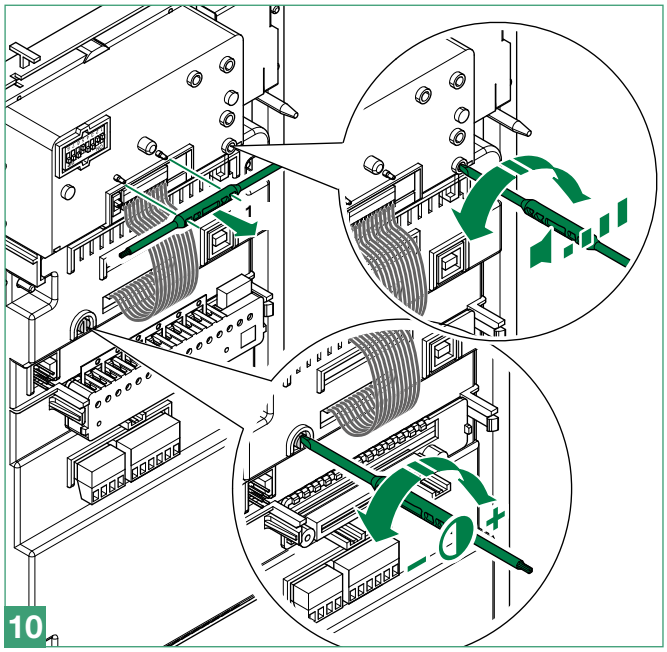
1
10

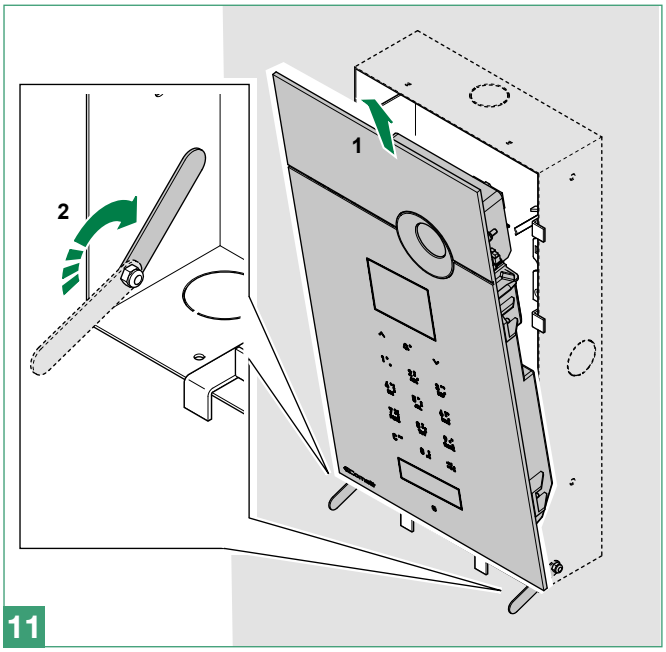
1
2
11

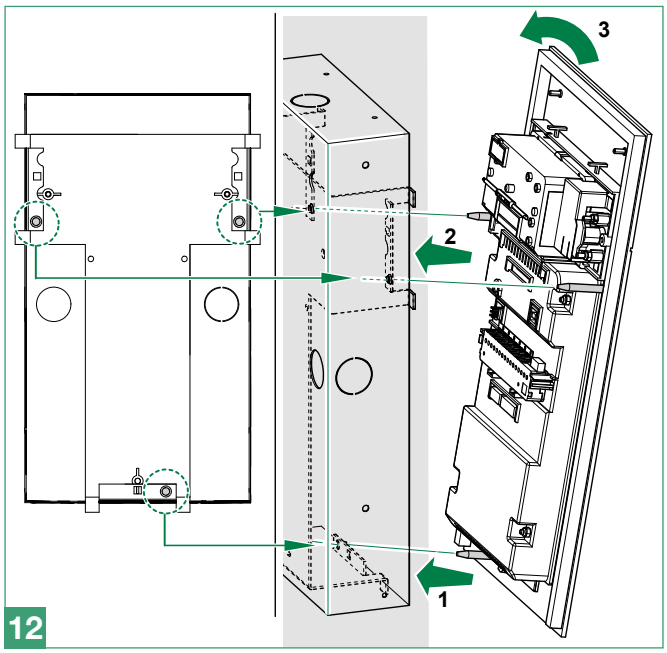
3
2
1
12

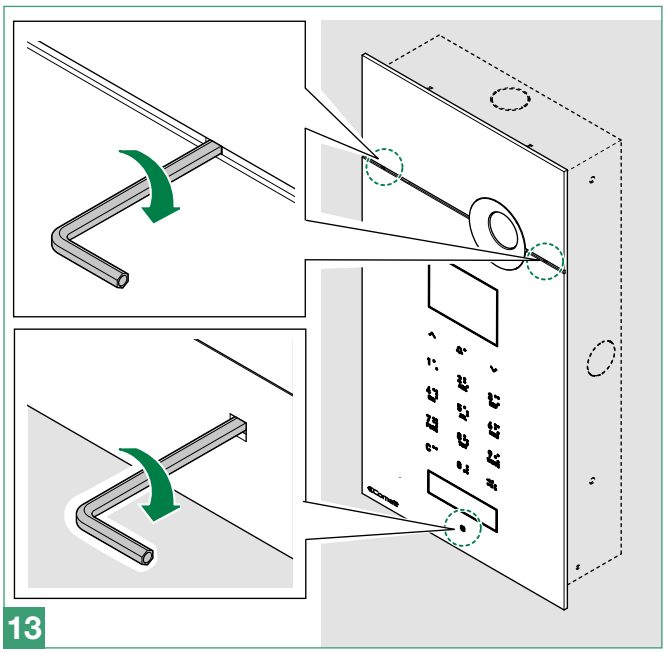
13

Mounting keypad panel

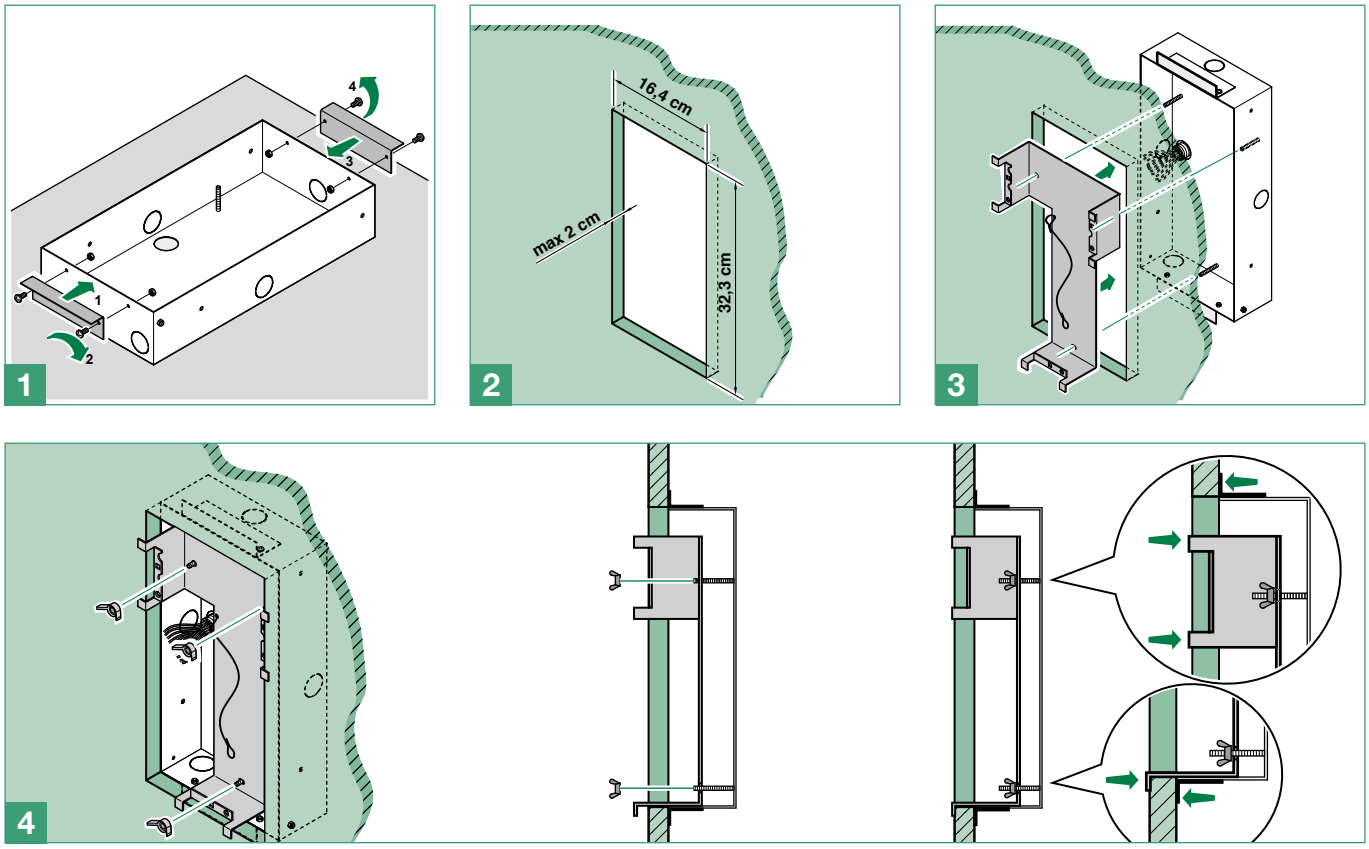

Installation information

- For further information on the functions and characteristics of the SBTOP system, see **SBTOP audio/video system**.
- The system, audio only with Art. 3451AS, can manage up to 240 users, connecting MAX 100 internal units for each riser and 3 internal units with the same user code.
- Modules Art. 4680C/1622 normally function as the main external unit (timed busy signal).
- To set them as a secondary external unit (busy signal active for the whole time the riser is in use), set all the selector DIP switches to ON.
- When a call is transmitted from the external unit, if a busy tone is heard instead of the ringtone, this means communication with another external unit is in progress.
- In the event of a persistent short-circuit on the bus line, the external unit emits an intermittent signalling tone.

Connections

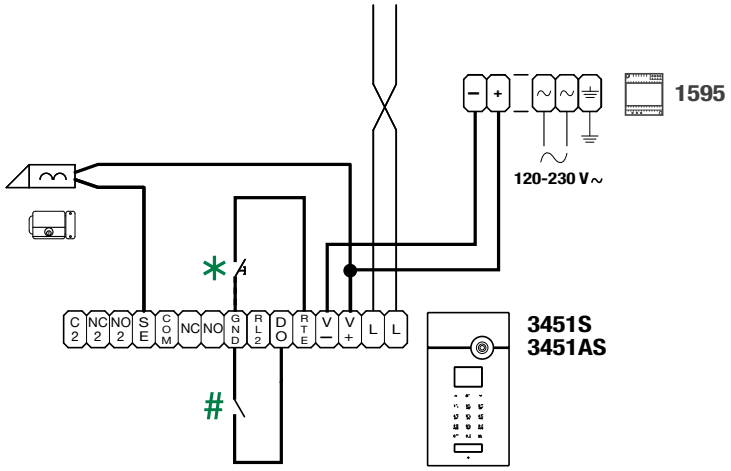

∗ **20 m MAX.** Local door-opener button.

\# Active input closed for DOOR OPEN signal

Variants

Variant for using the external unit relay

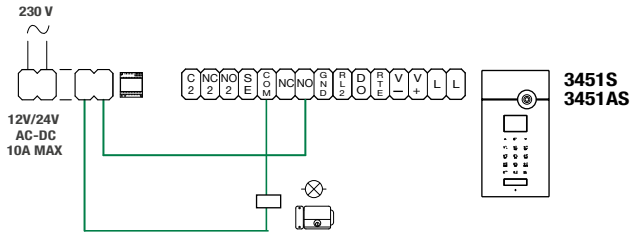

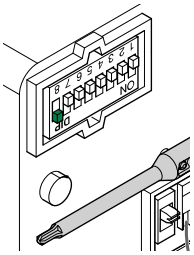

“C.NC.NO relay activation on actuator command: 2 sec”

Set dip switches in permanent mode as shown in figure (Dip switch 8 ON, Dip switches 1,2,3,4,5,6,7 OFF)

Applies to Art. 4680C/1622 with R.I. 041 or greater

Variant for using a safety lock

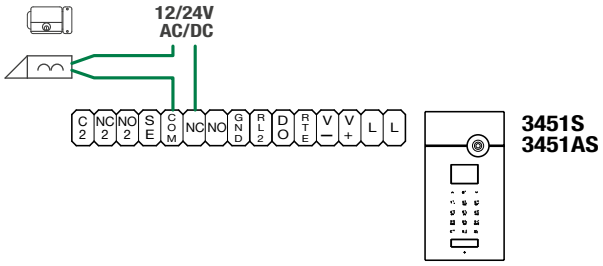

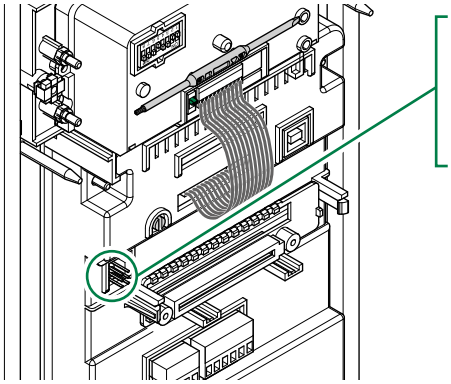

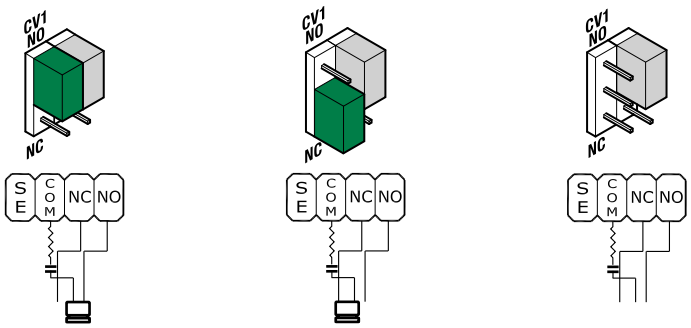

On C. NO contacts.

On C. NC contacts.

Excluded: voltage-free contact

Module connection

Simplekey modules

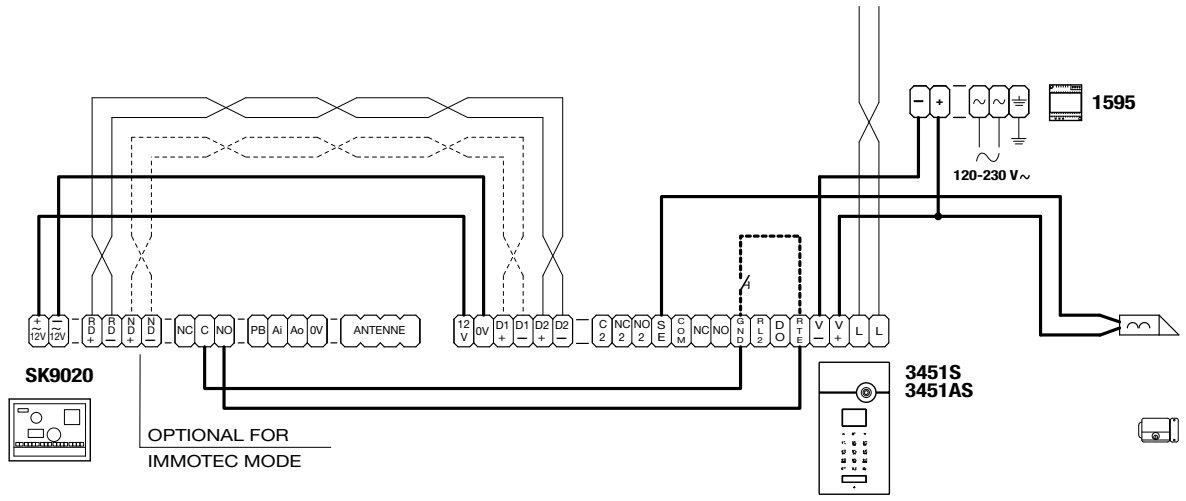

Connection to a computer via Art. MOXA TCC-80 20022618

It is possible to use up to 5 terminals Art. 3451
Maximum distance between Art. 20022618 and furthest terminal Art. 3451: 100 m

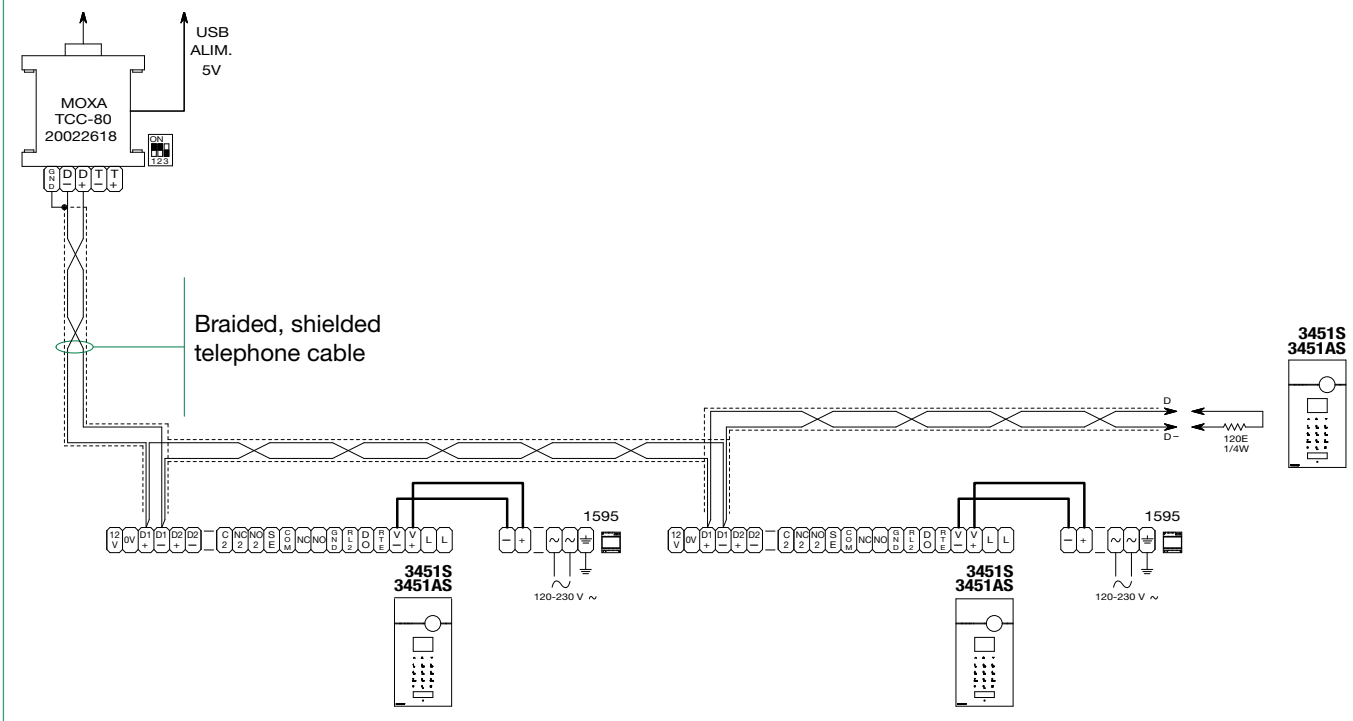

Programming

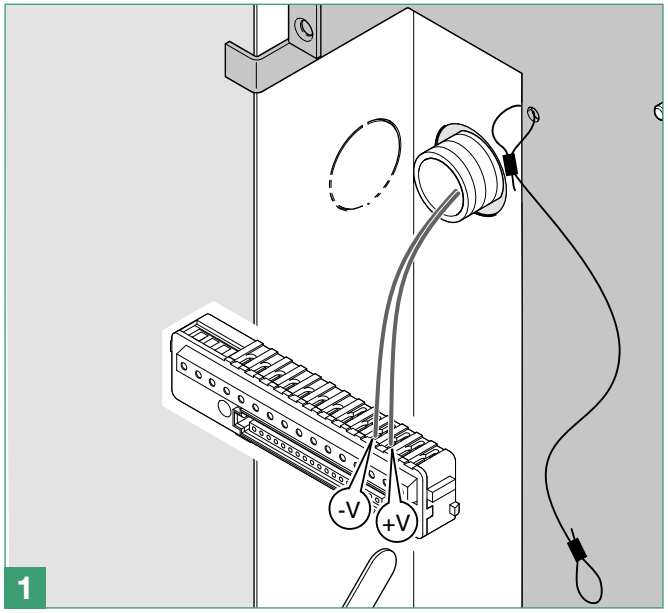

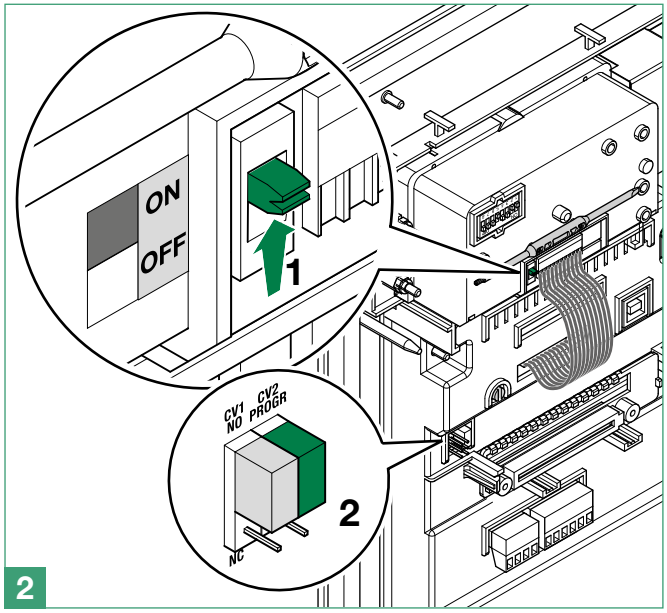

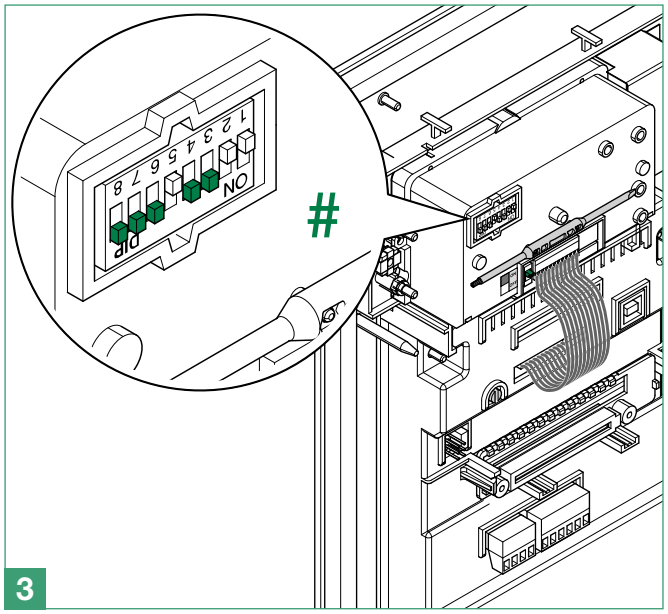

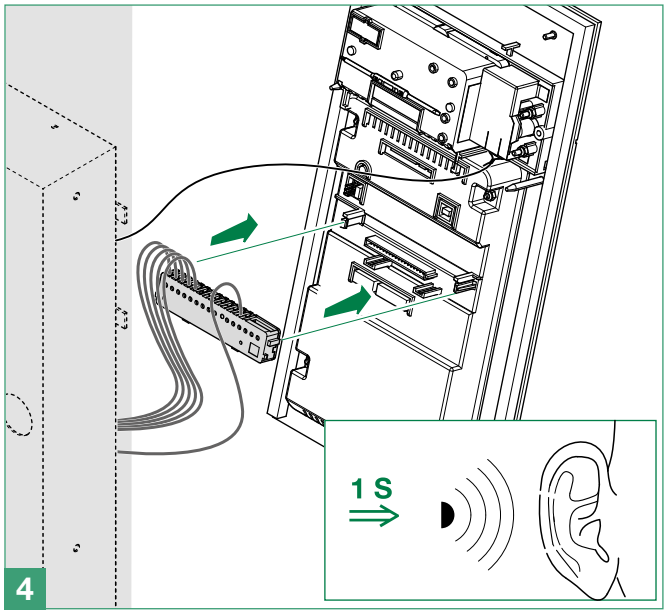

**Set the dip switches for the function you wish to program, see the table**

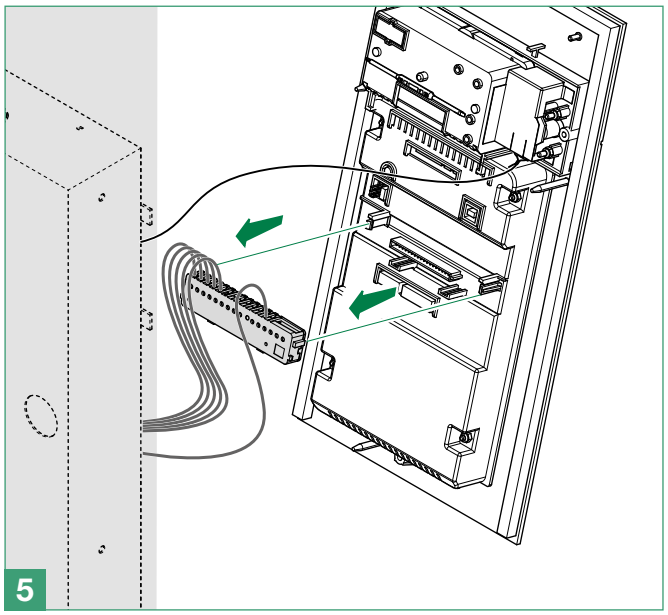

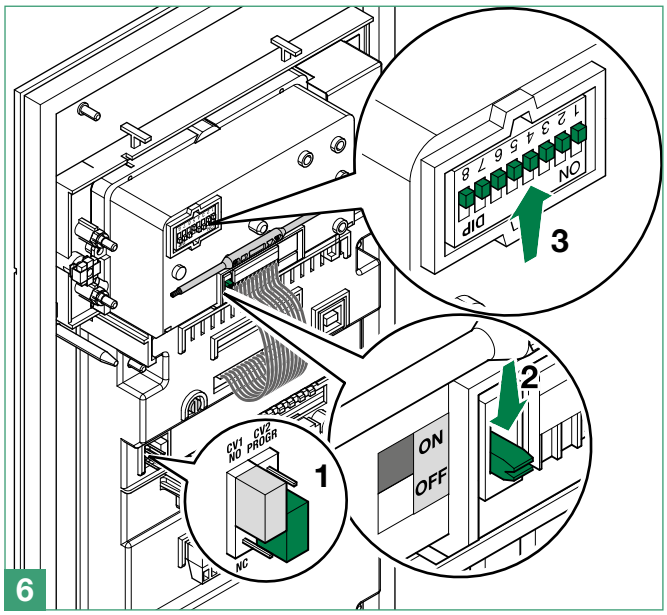

CODE	DIP SWITCH ON	FUCNTION
		De-misting heating element
213	1,3,5,7,8	OFF (default)
212	3,5,7,8	ON
		Audio-visual messages
210	2,5,7,8	visual messages only
211	1,2,5,7,8	Swedish
214	2,3,5,7,8	OFF (default)
215	1,2,3,5,7,8	Italian
216	4,5,7,8	French
217	1,4,5,7,8	Spanish
218	2,4,5,7,8	Dutch
219	1,2,4,5,7,8	Greek
220	3,4,5,7,8	English
221	1,3,4,5,7,8	German
222	2,3,4,5,7,8	Portuguese
		Door lock
223	1,2,3,4,5,7,8	Door lock command on SE in AC (default)
224	6,7,8	Door lock command on SE in enhanced AC
225	1,6,7,8	Door lock command on SE in DC
245	1,3,5,6,7,8	Door lock time: 2 sec + deactivation tone (default)
246	2,3,5,6,7,8	Door lock time: 4 sec
247	1,2,3,5,6,7,8	Door lock time: 8 sec
248	4,5,6,7,8	Door lock confirmation tone: enabled
251	1,2,4,5,6,7,8	C.NC.NO relay in parallel with SE (default)
252	3,4,5,6,7,8	Lock-release always enabled (default)
253	1,3,4,5,6,7,8	Lock-release only enabled for user called
		Actuator control management **N.B. the system should not include Art. 1256 in generic actuator mode.**
229	1,3,6,7,8	Enabling C.NC.NO relay on actuator control: 2 sec
230	2,3,6,7,8	Enabling C.NC.NO relay on actuator control: 4 sec
231	1,2,3,6,7,8	Enabling C.NC.NO relay on actuator control: 8 sec
228	3,6,7,8	Actuator control on serial line S: disabled (default)
227	1,2,6,7,8	Actuator control on serial line S: enabled
		System functions
204	3,4,7,8	Inox audio settings (default)
232	4,6,7,8	Awaiting response time: 60 sec (default)
233	1,4,6,7,8	Awaiting response time: 120 sec
234	2,4,6,7,8	Awaiting response time: 30 sec
235	1,2,4,6,7,8	Talk time: 90 sec (default)
236	3,4,6,7,8	Talk time: 180 sec
237	1,3,4,6,7,8	Self-ignition: enabled (default)
238	2,3,4,6,7,8	Self-ignition: disabled
239	1,2,3,4,6,7,8	Confirmation tone on user call: enabled (default)
240	5,6,7,8	Confirmation tone on user call: disabled

243	1,2,5,6,7,8	Reset wait time: 10 sec (default)
244	3,5,6,7,8	Reset wait time: 1 sec
208	5,7,8	Reset after lock-release in audio: enabled (default)
209	1,5,7,8	Reset after lock-release in audio: disabled
249	1,4,5,6,7,8	Call transmission: single (default)
250	2,4,5,6,7,8	Call transmission: triple
241	1,5,6,7,8	Control of internal units connected to Art. 4680C/1622: up to 70 (default)
242	2,5,6,7,8	Control of internal units connected to Art. 4680C/1622: from 71 to 100
		System mode
0		Simplebus (default)
255	1,2,3,4,5,6,7,8	Simplebus Top (NO Art. 4680KC)
254	2,3,4,5,6,7,8	Restore default

System performance and layouts

For further information of system performance and to view installation layouts, click on the type of system that best meets your needs:

with Art. 3451S

- **SBTOP audio/video system** for the creation of audio-video systems for *residential complexes*.

with Art. 3451AS

- **SB1 audio system** for the creation of audio systems for *residential complexes*.

General description

MAIN FEATURES

- Directory memory: 4000 names (of 20 characters), 4000 passwords, 4000 keys.
- 16 languages available with the option of setting a second language.
- 2 operating modes:
  - Access control disabled
  - Access control enabled
- 4 Simplebus or Simplebus Top call management modes:
  - Standard
  - Indirect code
  - Immotec standard (for future uses)
  - Immotec indirect (for future uses)
- Display of name only without code
- Screensaver activation
- Option of customising:
  - Keypad sensitivity
  - Keypad tone
  - Initial welcome message (on 4 lines of 10 characters each)
  - Name directory standby messages

EXTERNAL DATA MANAGEMENT

- Software Art. **1249B** (R.I. 003 - SW rev. 2.3 or higher) can be used (only while access control is disabled) to: enter (upload) and read (download) names and passwords by means of a PC connection via USB or over an RS485 line.
- The **Webserver** allows you to change certain configurations/settings of the device, to manage directory data to update firmware and web pages from a browser (also remotely).

Use

NAVIGATION MODE

▶ Scroll through the menu using ^ v.

▶ Press 🔔 or 🔑 to confirm.

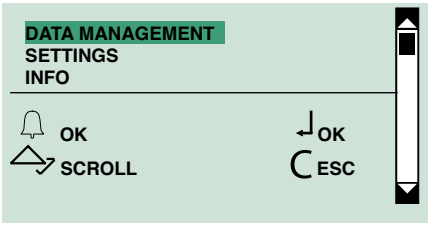

Certain buttons perform different functions depending on the context: to use the device correctly you must follow the on-screen suggestions

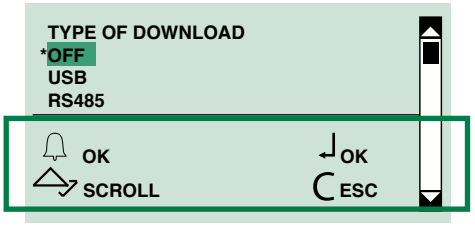

Highlighting indicates that the element is selected:

DATA MANAGEMENT

* indicates that the option is enabled: *OFF

ENTERING SPECIAL CHARACTERS

If alphanumeric characters are permitted (for example in **data management/names/enter names**), press the corresponding key repeatedly to enter the special characters.

KEYPAD: Special characters		
^	🔔 °	v
1 ° .	2 ABC	3 DEF
,;:._-#*"1	ABCÅÄĄÆßČĆ2	DEFÉĘĚ3
4 GHI	5 JKL	6 MNO
GHI4	JKLŁ5	MNOŃÖØÓ6
7 PQRS	8 TUV	9 WXYZ
PQRS7	TUVÜ8	WXYZ9
C	0	🔑
	space 0	

FEEDBACK

The system provides the following messages:

- **confirmation:** when a procedure is completed successfully
- **error:** when a procedure is not permitted or has not been successful
- **please wait:** when a procedure is in progress



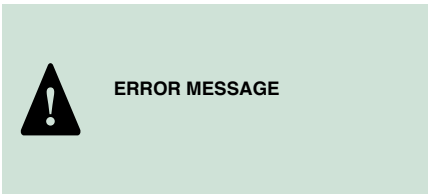



Self-testing

On power-up, the device runs a diagnostic test of the connections to check for correct speaker module communication and configuration.

The message PLEASE WAIT indicates self-testing in progress. On completion of self-testing, press the C key to put the module in standby.

The word OK should appear next to the menu items with the name SIMPLEBUS or SIMPLEBUS TOP at the bottom of the screen depending on the configuration of the speaker module and the directory module.

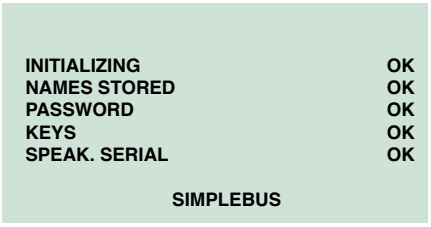

SETTING THE LANGUAGE

When you switch the system on, you will be asked to select the desired language (default = Italian).

1. Scroll through the list using ∧ ∨.

2. Press 🔔 or ⏎ to confirm.

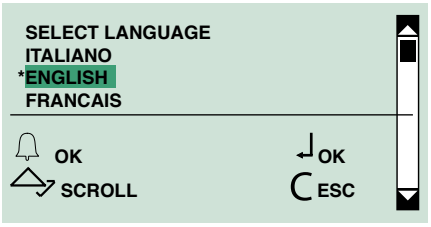

3. Press C to exit.

SETTING THE TYPE OF DOWNLOAD

In SIMPLEBUS/SIMPLEBUS TOP mode and with USB connected: when you switch the system on, you will be asked to select the type of download.

1. Scroll through the list using ∧ ∨.

2. Press 🔔 or ⏎ to confirm.

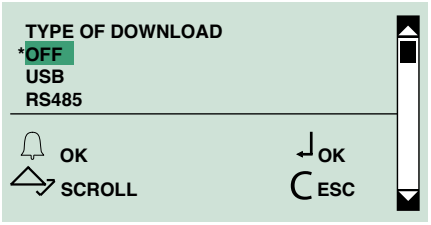

3. Press C to exit.

For downloading in RS485 mode, see diagram "Connection to a computer via Art. MOXA TCC-80 20022618".
To avoid malfunctions: during download in USB mode, the keypad must not be powered by an external source

Programming menu

From the programming menu you can:

- manage the entry, editing and deletion of names, codes, passwords, keys and supercodes;
- change the settings (type of download, system parameters, language, second language, call management...);
- view information on the device.

ACCESSING THE PROGRAMMING MENU

▶ Move **CV2** and power up the module.

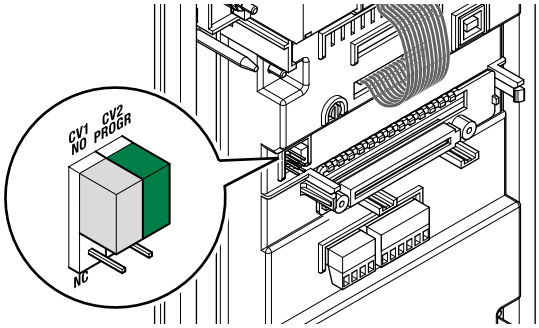

or:

1. Press
2. Enter the supercode (default 778899).

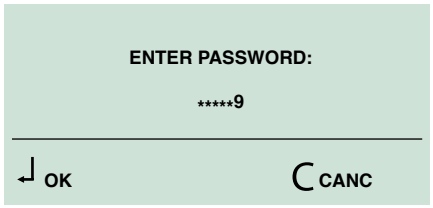

3. Press to confirm.

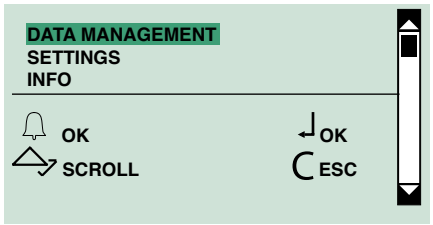

1. Data management

Before storing data in the directory, we recommend selecting:
the call management mode, see "2.5. CALL MANAGEMENT"
the access control mode you wish to adopt, see "2.6. ACCESS CONTROL".
Data entry and changes can be managed externally using software 1249B (R.I. 003 - SW rev. 2.3 or later) or through Webserver.

1.1. Names

1.1.1 ENTER NAMES

Not available if the call mode is IMMOTEC STANDARD or IMMOTEC INDIRECT (see section "2.5. CALL MANAGEMENT")

"Enter names" can be used to enter names and all the data associated with them (call code, indirect code, password, RFID key).

1. Access programming mode, see "ACCESSING THE PROGRAMMING MENU"
2. Select **data management/names/enter names** by pressing or to confirm.
3. Enter the name.

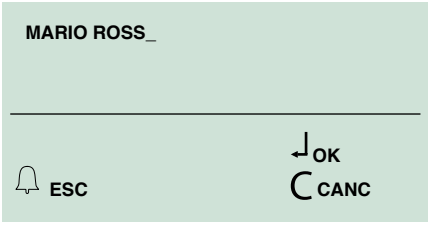

4. Press to confirm.
5. Enter the "call code" and press to confirm.

IN SIMPLEBUS MODE

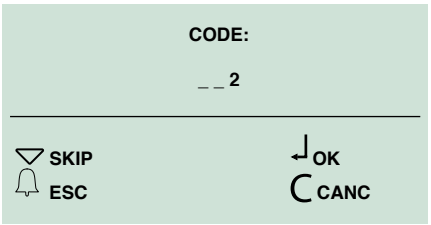

IN SIMPLEBUS TOP MODE (see "2.5. CALL MANAGEMENT")

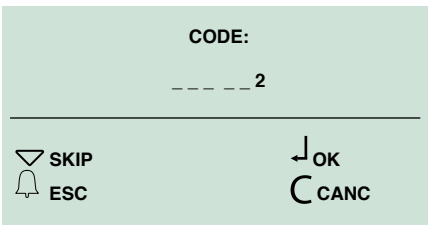

or:

▶ press to skip entry.

ONLY WITH “INDIRECT CODE” ENABLED

6. Enter the “indirect code” and press ↵ to confirm.

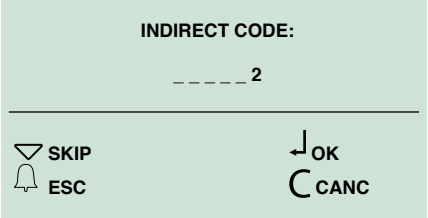

or:

- press ∨ to skip entry.

ONLY WITH “ACCESS CONTROL” ENABLED

7. Enter the password and press ↵ to confirm.

The password must be at least 4 characters long

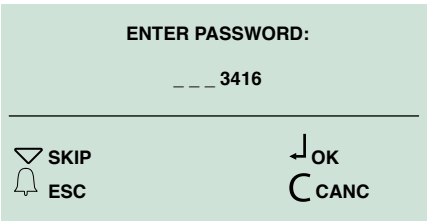

» *The red and green LEDs flash alternately to indicate that the device is waiting for a key to be registered.*

or:

- press ∨ to skip entry.

8. Move the key over the RFID sensor.

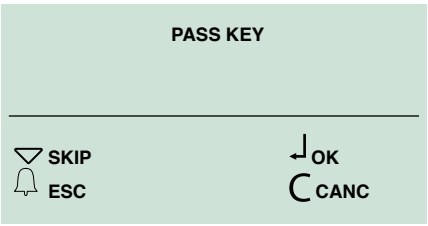

» *The confirmation message “KEY DETECTED” “COLOUR” will appear on the display.*

or:

- press ∨ to skip entry.

1.1.2 CHANGE NAMES

“Change names” can be used to change a name and call code, plus the indirect code associated with it.

not available if the call mode is IMMOTEC STANDARD or IMMOTEC INDIRECT (see section “2.5. CALL MANAGEMENT”)

1. Access programming mode, see ”ACCESSING THE PROGRAMMING MENU”.

2. Select **data management/names/change names** by scrolling through the menu using ∧ ∨ and pressing 🔔 or ↵ to confirm.

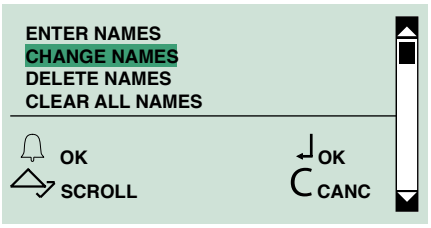

3. Enter the name (full name or just the first letter).

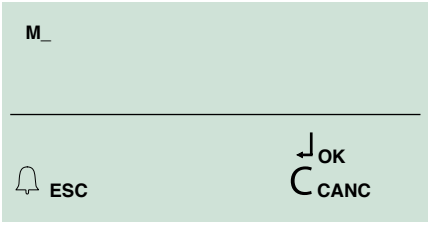

4. Press ↵ to start searching.

5. Scroll using ∧ ∨ and/or press 🔔 or ↵ to confirm the name you wish to change.

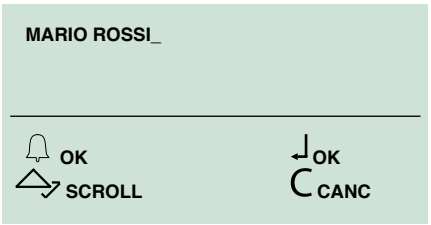

6. Change the name and press ↵ to confirm.

7. Change the “call code” and press ↵ to confirm.

ONLY WITH “INDIRECT CODE” ENABLED

8. Change the indirect code and press ↵ to confirm.

9. Press C to exit.

1.1.3 DELETE NAMES

"Delete names" can be used to remove a name and the data associated with it.

1. Access programming mode, see "ACCESSING THE PROGRAMMING MENU".
2. Select data **management/names/delete names** by scrolling through the menu using ^ v and pressing 🔔 or ↵ to confirm.

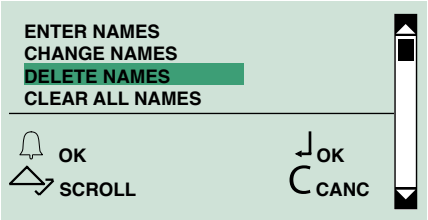

3. Enter the name (full name or just the first letter).

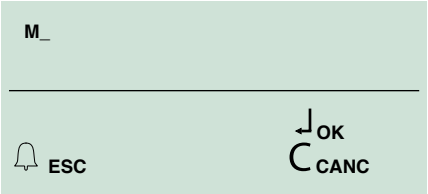

4. Press ↵ to start searching.
5. Scroll using ^ v and/or press 🔔 or ↵ to confirm the name you wish to remove.
6. Press C to exit.

1.1.4 CLEAR ALL NAMES

"Clear all names" can be used to remove all names and the data associated with them.

1. Access programming mode, see "ACCESSING THE PROGRAMMING MENU".
2. Select data **management/names/clear all names** by scrolling through the menu using ^ v and pressing 🔔 or ↵ to confirm.

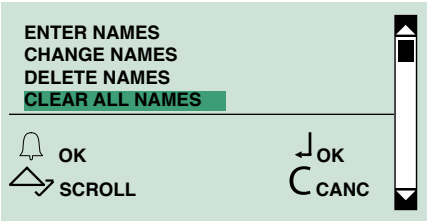

3. Press ↵ to confirm deletion or press C to exit.

1.2. PASSWORD

Password entry makes it possible to activate the door lock relay.

1.2.1 ENTER PASSWORD

1. Access programming mode, see "ACCESSING THE PROGRAMMING MENU".
2. Select data **management/passwords/enter** by scrolling through the menu using ^ v and pressing 🔔 or ↵ to confirm.

ONLY WITH "ACCESS CONTROL" ENABLED

3. Enter the name to which you wish to assign the password (in full or just the first letter).

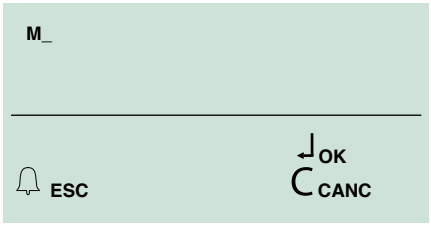

4. Press ↵ to start searching
5. Scroll using ^ v and/or press 🔔 or ↵ to confirm the selected name.
6. Enter the password (max. 6 characters).

⚠ ***The password must be at least 4 characters long***

7. Press ↵ to confirm or press C to exit.

1.2.2 CHANGE PASSWORD

1. Access programming mode, see "ACCESSING THE PROGRAMMING MENU".
2. Select data management/passwords/change by scrolling through the menu using ^ v and pressing 🔔 or ↵ to confirm.

ONLY WITH "ACCESS CONTROL" DISABLED

3a. Enter the password you want to change

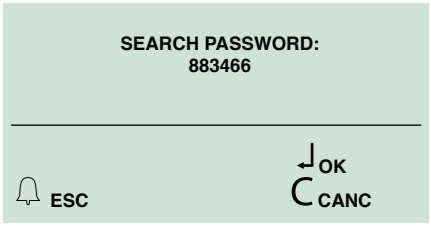

4a. Press ↵ to start searching.

ONLY WITH "ACCESS CONTROL" ENABLED

3b. Enter the name to which the password you wish to change is assigned (in full or just the first letter).

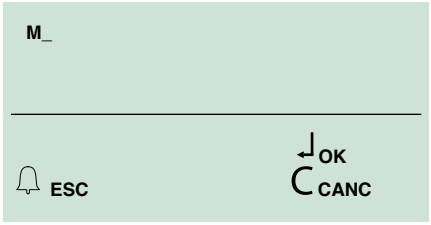

4b. Press ↵ to start searching.

5b. Scroll using ∧ ∨ and/or press 🔔 or ↵ to confirm the selected name.

6. Change the password and press ↵ to confirm.

⚠ ***The password must be at least 4 characters long***

7. Press C to exit.

1.2.3 DELETE PASSWORD

1. Access programming mode, see "ACCESSING THE PROGRAMMING MENU".

2. Select **data management/passwords/delete** by scrolling through the menu using ∧ ∨ and pressing 🔔 or ↵ to confirm.

ONLY WITH "ACCESS CONTROL" DISABLED

3a. Enter the password you want to delete.

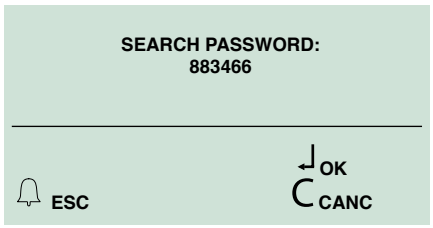

4a. Press ↵ to start searching.

ONLY WITH "ACCESS CONTROL" ENABLED

3b. Enter the name to which the password you wish to delete is assigned (in full or just the first letter).

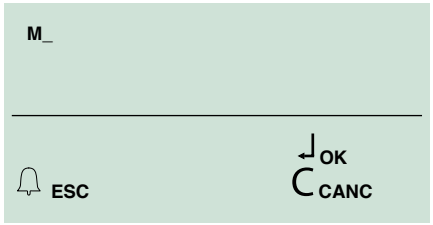

4b. Press ↵ to start searching.

5b. Scroll using ∧ ∨ and/or press 🔔 or ↵ to confirm the selected name.

6. Press ↵ to delete the password.

7. Press C to exit.

1.2.4 CLEAR ALL PASSWORDS

1. Access programming mode, see "ACCESSING THE PROGRAMMING MENU".

2. Select **data management/passwords/clear all** by scrolling through the menu using ∧ ∨ and pressing 🔔 or ↵ to confirm.

3. Press ↵ to confirm deletion or press C to exit.

1.3. DIGITAL KEYS

⚠ ***The use of RFID keys can only be managed when "access control" mode is enabled.***

ONLY WITH "ACCESS CONTROL" ENABLED

1.3.1 ENTER KEY
1.3.2 CHANGE KEY

1. Access programming mode, see "ACCESSING THE PROGRAMMING MENU".

2. Select **data management/keys/(enter/change)** by scrolling through the menu using ∧ ∨ and pressing 🔔 or ↵ to confirm.

3. Enter the name for which you wish to assign/change the key (in full or just the first letter).



4. Press ↵ to start searching.

5. Scroll using ∧ ∨ and/or press 🔔 or ↵ to confirm the selected name.

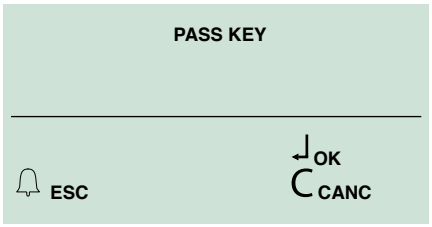

» *The red and green LEDs flash alternately to indicate that the device is waiting for a key to be registered.*

6. Move the key over the RFID sensor.

» *The confirmation message "KEY DETECTED COLOUR ..." will appear on the display.*

1.3.3 DELETE KEY

1. Access programming mode, see "ACCESSING THE PROGRAMMING MENU".

2. Select **data management/keys/delete** by scrolling through the menu using ∧ ∨ and pressing 🔔 or ↵ to confirm.

3. Enter the name for which you wish to delete the key (in full or just the first letter).

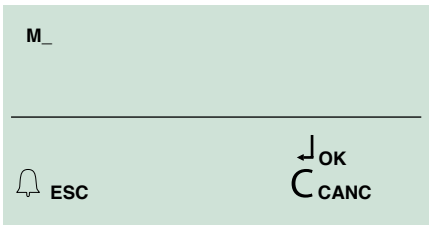

4. Press ↵ to start searching.

5. Scroll using ∧ ∨ and/or press 🔔 or ↵ to confirm the selected name.

6. Press to delete the key or press C to exit.

1.2.3 CLEAR ALL KEYS

1. Access programming mode, see "ACCESSING THE PROGRAMMING MENU".
2. Select **data management/keys/clear** all by scrolling through the menu using ∧ ∨ and pressing 🔔 or to confirm.
3. Press to confirm deletion or press C to exit.

1.4. SUPERCODE

1.4.1 ENTER NEW CODE

The supercode (**default 778899**) is used to access the programming menus.

1. Access programming mode, see "ACCESSING THE PROGRAMMING MENU".
2. Select the menu entries: Select **data management/supercode/enter** new code by scrolling through the menu using ∧ ∨ and pressing 🔔 or to confirm.

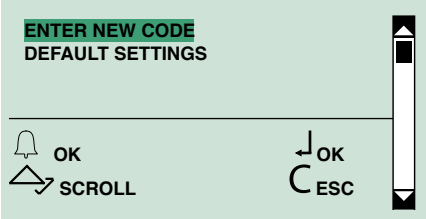

3. Change the supercode (max. 6 digits).



⚠ ***The supercode must be at least 4 digits long***

4. Press to confirm.

1.4.2 DEFAULT SETTINGS

1. Access programming mode, see "ACCESSING THE PROGRAMMING MENU".
2. Select **data management/supercode/default** settings by scrolling through the menu using ∧ ∨ and pressing 🔔 or to confirm.

⚠ ***The command cannot be cancelled.***

2. Settings

2.1. TYPE OF DOWNLOAD

1. Access programming mode, see "ACCESSING THE PROGRAMMING MENU".
2. Select: **settings/type of download**.
3. Choose between:

   OFF
   USB
   RS485

⚠ ***For downloading in RS485 mode, see diagram "Connection to a computer via Art. MOXA TCC-80 20022618".***

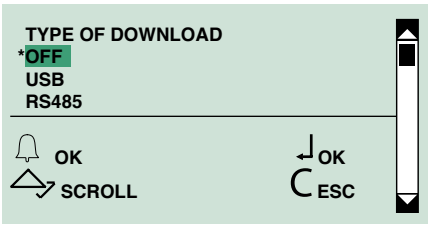

2.2. SYSTEM PARAMETERS

2.2.1 SPEAKER PARAMETERS

2.2.1.1 Enter Audio Time

1. Access programming mode, see "ACCESSING THE PROGRAMMING MENU".
2. Select: **settings/system parameters/speaker parameters/audio time.**
3. Enter the desired value:

   RANGE = 10 - 180 sec.

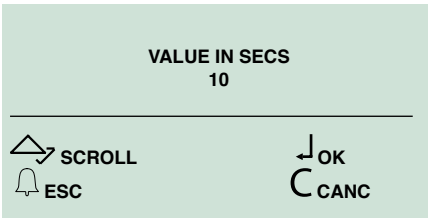

4. Confirm.

2.2.1.2 Enter Door Lock Time

1. Access programming mode, see "ACCESSING THE PROGRAMMING MENU".
2. Select: **settings/system parameters/speaker parameters/door lock time.**
3. Enter the desired value:

   RANGE = 1- 8 sec.

4. Confirm.

2.2.1.3 Enter Reset Time

1. Access programming mode, see "ACCESSING THE PROGRAMMING MENU".
2. Select: **settings/system parameters/speaker**

parameters/reset time.

3. Enter the desired value.

   RANGE = 1- 10 sec.

4. Confirm.

2.2.1.4 View

1. Access programming mode, see **"ACCESSING THE PROGRAMMING MENU"**.
2. Select: **settings/system parameters/speaker parameters/view.**
   - » *Reproduces the parameter values: audio time, door lock time and reset time.*

AUDIO TIME	**010**
DOOR LOCK TIME	**02**
RESET WAIT TIME	**10**
SIMPLEBUS	

2.2.1.5 Advanced Options

2.2.1.5.1 LOCK ON SE

A) TYPE

Allows setting of the door lock type on the SE output of the speaker module

1. Access programming mode, see **"ACCESSING THE PROGRAMMING MENU"**.
2. Select: **settings/system parameters/speaker parameters/advanced options/lock on SE/type.**
3. Choose between:

   AC (default)
   AC PLUS
   DC

4. Confirm.

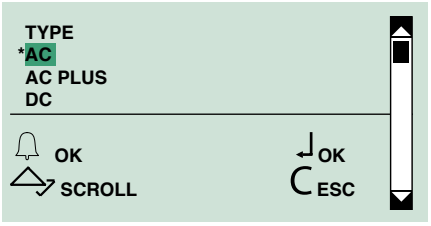

B) CONFIRMATION TONE

Allows enabling/disabling of the door lock confirmation tone on the speaker module

1. Access programming mode, see **"ACCESSING THE PROGRAMMING MENU"**.
2. Select: **settings/system parameters/speaker parameters/advanced options/lock on SE/ confirmation tone.**
3. Choose between:

   YES
   NO

4. Confirm.

C) STANDBY LOCK REL.

Allows enabling/disabling of the standby lock release on the speaker module

1. Access programming mode, see **"ACCESSING THE PROGRAMMING MENU"**.
2. Select: **settings/system parameters/speaker parameters/advanced options/lock on SE/standby lock rel.**
3. Choose between:

   YES (default)
   NO

4. Confirm.

D) VIEW

Allows viewing of the door lock parameters on the SE output of the speaker module

1. Access programming mode, see **"ACCESSING THE PROGRAMMING MENU"**.
2. Select: **settings/system parameters/speaker parameters/advanced options/lock on SE/view.**
   - » *Reproduces the parameter values: type, confirmation tone, standby lock release.*

TYPE	**AC PLUS**
CONFIRMATION TONE	☒
STANDBY LOCK REL.	☐

2.2.1.5.2 RELAY CONTACT

A) ACTUATOR FUNCTION

Allows enabling/disabling of the actuator function on the relay contac

1. Access programming mode, see **"ACCESSING THE PROGRAMMING MENU"**.
2. Select: **settings/system parameters/speaker parameters/advanced options/relay contact/ actuator function.**
3. Choose between:

   YES
   NO

4. Confirm.

B) IN PARALLEL TO SE

Allows enabling/disabling of the relay contact in parallel to the speaker module SE output

1. Access programming mode, see **"ACCESSING THE PROGRAMMING MENU"**.
2. Select: **settings/system parameters/speaker parameters/advanced options/relay contact/in parallel to SE**
3. Choose between:

   YES
   NO

4. Confirm.

C) VIEW

Allows viewing of the relay contact parameters

1. Access programming mode, see **"ACCESSING THE PROGRAMMING MENU"**.
2. Select: **settings/system parameters/speaker parameters/advanced options/relay contact/view.**

» *Reproduces the relay contact parameters.*

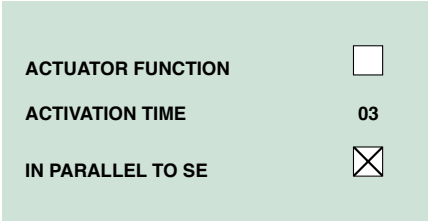

2.2.1.5.3 S SERIAL

A) ACTUATOR FUNCTION

Allows enabling/disabling of the actuator function on the S serial line

1. Access programming mode, see **"ACCESSING THE PROGRAMMING MENU"**.
2. Select: **settings/system parameters/speaker parameters/advanced options/S serial/actuator function.**
3. Choose between:

   YES
   NO
4. Confirm

2.2.1.5.4 VOICE MESSAGES

Allows enabling/disabling of voice and visual messages on the speaker module

1. Access programming mode, see **"ACCESSING THE PROGRAMMING MENU"**.
2. Select: **settings/system parameters/speaker parameters/advanced options/voice messages.**
3. Select a language to enable voice and visual messages on the speaker module, or select OFF to disable voice and visual messages on the speaker module.

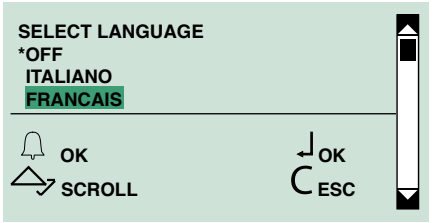

4. Confirm.

2.2.1.5.5 CALL

A) TRIPLE CALL

Allows enabling/disabling of the triple call function

1. Access programming mode, see .
2. Select: **settings/system parameters/speaker parameters/advanced options/call/triple call.**
3. Choose between:

   YES
   NO (default)
4. Confirm.

B) CONFIRMATION TONE

Allows enabling/disabling of the the call confirmation tone

1. Access programming mode, see **"ACCESSING THE PROGRAMMING MENU"**.
2. Select: **settings/system parameters/speaker parameters/advanced options/call/confirmation tone.**
3. Choose between:

   YES (default)
   NO
4. Confirm.

C) CODES BOOSTER

Allows enabling/disabling of the call codes booster

1. Access programming mode, see **"ACCESSING THE PROGRAMMING MENU"**.
2. Select: **settings/system parameters/speaker parameters/advanced options/call/codes booster.**
3. Choose between:

   YES
   NO (default)
4. Confirm.

D) ANSWER WAIT TIME

Allows setting of the call answer wait time

1. Access programming mode, see **"ACCESSING THE PROGRAMMING MENU"**.
2. Select: **settings/system parameters/speaker parameters/advanced options/call/answer wait time.**
3. Enter the value in seconds.

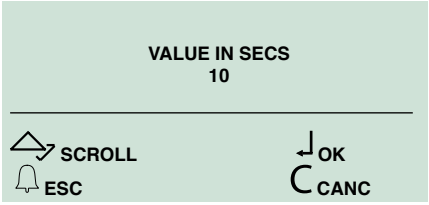

4. Confirm.

E) VIEW

Allows viewing of the speaker module call parameters

1. Access programming mode, see **"ACCESSING THE PROGRAMMING MENU"**.
2. Select: **settings/system parameters/speaker parameters/advanced options/call/view.**

» *Reproduces the speaker module call parameters*

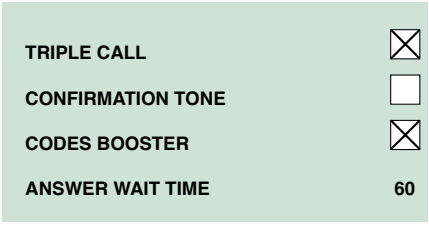

2.2.1.5.6 SELF IGNITION

Allows enabling/disabling of self-ignition

1. Access programming mode, see **"ACCESSING THE PROGRAMMING MENU"**.
2. Select: **settings/system parameters/speaker parameters/advanced options/call/self ignition**
3. Choose between:

   YES (default)
   NO
4. Confirm.

2.2.1.5.7 DEFAULT SETTINGS

Used to restore the default settings:

De-misting heating element = disabled
Audio-visual messages = disabled
Door lock command on SE in AC
Door lock time = 2 sec + tone disabled
C.NC.NO relay in parallel with SE
Door lock-release always enabled
Actuator function on S serial line = disabled
Answer wait time = 60 sec
Conversation time = 90 sec
Self-ignition = enabled
Confirmation tone on user call = enabled
Reset wait time = 10 sec
Send call = single
Control of internal units connected to speaker module = up to 70
System mode = Simplebus

1. Access programming mode, see **"ACCESSING THE PROGRAMMING MENU"**.
2. Select: **settings/system parameters/speaker parameters/advanced options/default settings.**
3. Choose between:

   YES
   NO
4. Confirm.

2.2.2 RS485 ADDRESS

2.2.2.1 RS485 Address

For data downloading via RS485, please refer to the wiring diagram "Connection to a computer via Art. MOXA TCC-80 20022618".
For connection to module SK9020, please refer to the wiring diagram "Connection to a computer via Art. MOXA TCC-80 20022618".

1. Access programming mode, see "ACCESSING THE PROGRAMMING MENU".
2. Select: **settings/system parameters/RS485 address/ RS485 address.**
3. Enter the RS485 address (max. 3 digits).

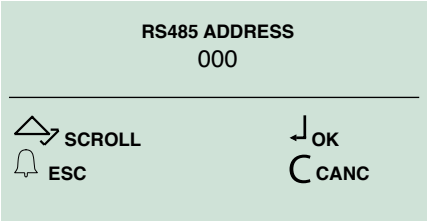

4. Confirm.

2.3. SELECT LANGUAGE

This menu can be used to set the main language.

1. Access programming mode, see "ACCESSING THE PROGRAMMING MENU".
2. Select: **settings/select language.**

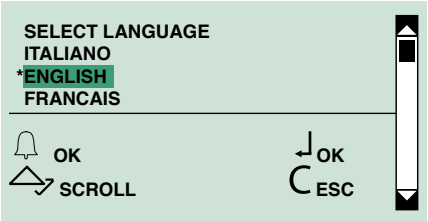

3. Select the desired language.
4. Confirm.

2.4. SECOND LANGUAGE

Allows the alternate switching of name directory standby messages from the main language to the second language.

1. Access programming mode, see "ACCESSING THE PROGRAMMING MENU".
2. Select: **settings/second language.**
3. Select the desired second language and confirm.

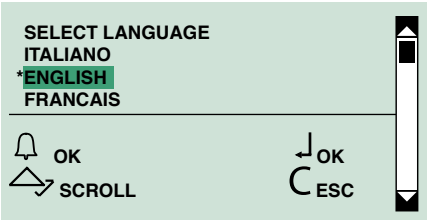

DEFAULT = Second language disabled.

To disable the second language:

1. Access programming mode, see "ACCESSING THE PROGRAMMING MENU".
2. Select: **settings/second language.**
3. Select DEFAULT and confirm.

or:

- Re-set the main language (see "2.3. SELECT LANGUAGE").

IMPORTANT: If entered, the initial welcome message (see section "2.8. WELCOME MESSAGE") will not be switched to the second language
The second language must be set after the main language has been selected

2.5. CALL MANAGEMENT

Allows setting of the system type (Simplebus or Simplebus Top) and call mode (Standard, indirect code, Immotec or Immotec indirect).

CAUTION: set the system type (Simplebus or Simplebus Top) and only afterwards the call mode (Standard, Indirect code, Immotec standard or Immotec indirect)

To change the system type and call mode it is necessary to erase the entire directory, see "1.1.4 CLEAR ALL NAMES"

SIMPLEBUS (default) for systems without switching devices Art. 1424 in Top 1, 2, 3 mode which define the system zones.

SIMPLEBUS TOP for systems with switching devices Art. 1424 in Top 1, 2, 3 mode which define the system zones.

1. Set the speaker unit selector to ON, see Fig.

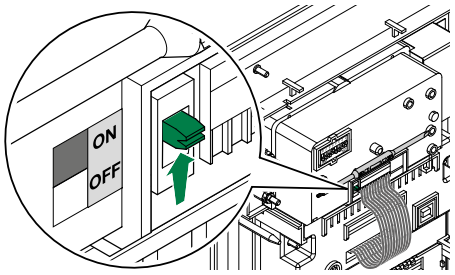

2. Connect the terminal block.

3. Access programming mode, see "ACCESSING THE PROGRAMMING MENU".

4. Select **settings/call management.**

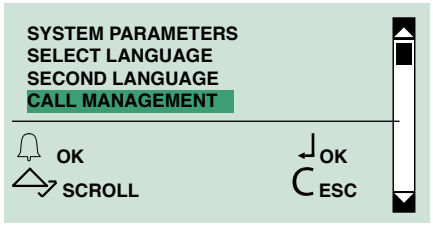

5. Select the system type and confirm.

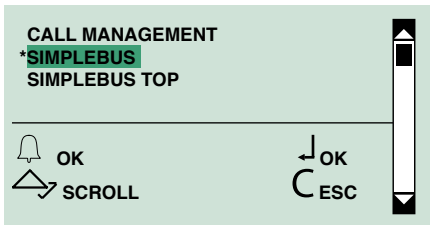

6. Select the call mode and confirm.

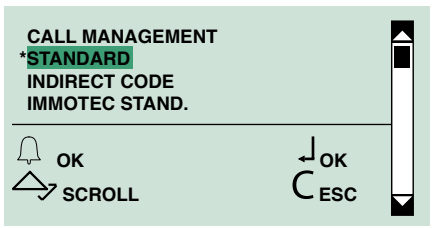

7. Set the speaker module selector to OFF.

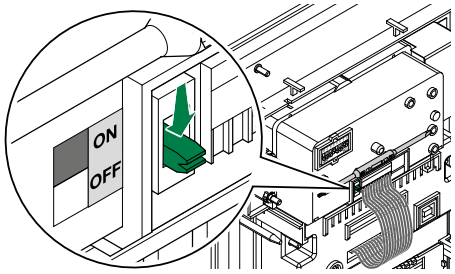

STANDARD - SIMPLEBUS (default)

IIn this mode, the user is identified by a name field and a code field no longer than 3 digits (between 1 and 240).

Example:

User name= Mario Rossi
Code= 2

STANDARD - SIMPLEBUS TOP

In this mode, the user is identified by the name field (optional) and a code field consisting of two parts:

zone field with no more than 3 digits (between 1 and 500);

user field which must have 3 digits (between 1 and 240).

Example:

User name= Mario Rossi
Code= 25 015

The call can be made in the following ways:

✓ During normal operation

1. Enter the user code (e.g. 25 015).

2. Press 🔔 to make the call or C to cancel and exit.

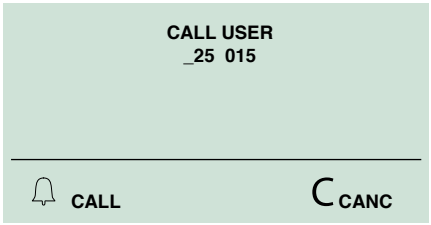

or:

1. Scroll through the directory using ∧ ∨.

2. Press 🔔 to make the call or C to exit.

INDIRECT CODE - SIMPLEBUS or SIMPLEBUS TOP

In this mode the user is identified by a name field (optional), a code field (different for Simplebus and Simplebus Top) and an indirect code with no more than 6 characters.

Example:

User name= Mario Rossi
Code= 2 (for Simplebus) or 25 015 (for Simplebus top
Indirect code= 100

The call can be made in the following ways:

✓ During normal operation

1. Enter the indirect code (e.g. 100).

2. Press 🔔 to make the call or C to cancel and exit.

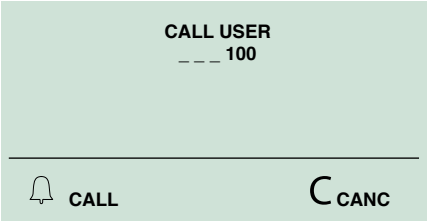

or:

1. Scroll through the directory using ^ v.
2. Press to make the call or C to exit.

2.6. ACCESS CONTROL

The entrance panel can operate in two modes:

- **"access control" disabled:** in this mode, every name can be assigned a call code, which is saved in the directory. The entry passwords must be entered separately and are not assigned to any name.
- **"access control" enabled:** in this mode, a call code, an indirect code (only in case of indirect call), a password and an RFID key can be saved for every name listed in the directory. The option of assigning a password or key to a name allows access identification.

When access control is enabled, the following cannot be used:
- Immotec call mode
- data loading from 1249B (R.I. 003 - SW rev. 2.3 or higher)

To switch from "access control" disabled to "access control" enabled, all saved passwords must be deleted

To switch from "access control" enabled to "access control" disabled, all saved passwords and keys must be deleted.

1. Access programming mode, see "ACCESSING THE PROGRAMMING MENU".
2. Select **settings/access control**

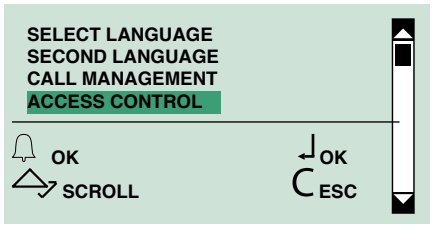

3. Select:
   YES
   NO (default)
4. Confirm

2.7. NAME ONLY

Allows only the name to be displayed, without the user code, when scrolling through the directory and during a call from a user.

This function is **disabled** by default.

1. Access programming mode, see "ACCESSING THE PROGRAMMING MENU".
2. Select **settings/name only.**

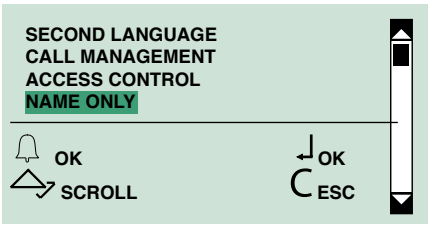

3. Select:
   YES
   NO (default)
4. Confirm.

2.8. WELCOME MESSAGE

This function (not enabled by default) can be used to enter a welcome message (MAX. 40 characters over 4 lines, in block capitals).

The welcome message alternates with the normal information screens every 4 seconds.

N.B.: the message cannot be switched to the second language when the "SECOND LANGUAGE" function is on (see section "2.4. SECOND LANGUAGE").

2.8.1 CHANGE

It is possible to enter the welcome message using software Art. 1249B.

1. Access programming mode, see "ACCESSING THE PROGRAMMING MENU".
2. Select menu options: **settings/welcome message/ change**

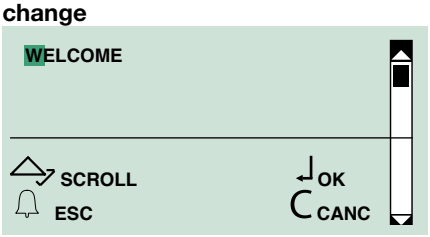

3. Enter the welcome message.

   or:

   Delete the existing message and enter a new message.
4. Confirm.

2.8.2 ENABLE

The “initial message” function is disabled by default.

If activated, the welcome message will appear and remain on the display after a 30-second period of inactivity.

1. Access programming mode, see ”ACCESSING THE PROGRAMMING MENU.
2. Select: **settings /welcome message/enable**

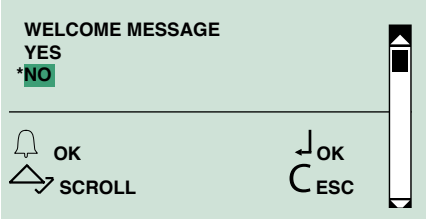

3. Confirm to enable the message.

2.8.3 STATIC MESSAGE

The “initial message” function is disabled by default.

If activated, the welcome message will appear and remain on the display after a 30-second period of inactivity.

1. Access programming mode, see ”ACCESSING THE PROGRAMMING MENU.
2. Select: **settings/welcome message/static message**

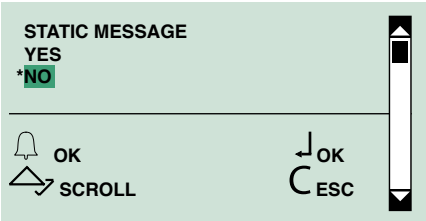

3. Select:

   YES
   NO (default)

4. Confirm

2.9 SCREENSAVER

If this function is enabled (it is disabled by default), the screensaver will appear after a 30-second period of inactivity.

1. Access programming mode, see ”ACCESSING THE PROGRAMMING MENU.
2. Select: **settings/screen saver.**

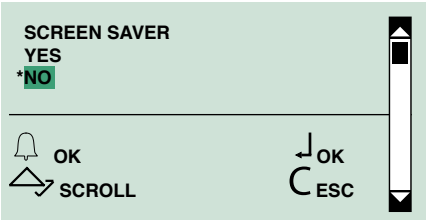

3. Select:

   YES to enable the function.
   NO to disable the function.

4. Confirm and/or press C to exit.

2.10 KEYPAD SENSITIVITY

This parameter can be used to set how sensitive the keypad is to being touched.

1. Access programming mode, see ”ACCESSING THE PROGRAMMING MENU.
2. Select: **settings/keypad sens**

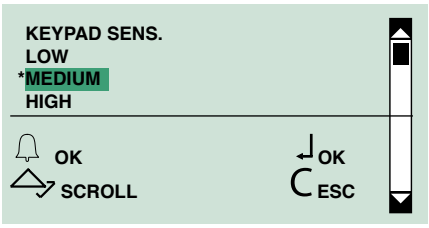

3. Choose between:

   low
   medium (default)
   high

4. Confirm.

2.11 KEYPAD TONE

This function can be used to enable/disable keypad tones.

1. Access programming mode, see ”ACCESSING THE PROGRAMMING MENU.
2. Select: **settings/keypad tone.**
3. Choose between:

   YES to enable the function (default).
   NO to disable the function.

4. Confirm.

2.12 PROXIMITY SENSOR

Lighting for entrance panel is provided by the “LED sun shade” accessory Art. 3459. The “proximity sensor” function encourages energy saving by activating the lighting only when the user approaches the entrance panel.

The sensor can be set to “off”, or one of three sensitivity levels which detect the user at different distances (low sensitivity > user nearby, high sensitivity > user further away).

1. Access programming mode, see ”ACCESSING THE PROGRAMMING MENU.
2. Select: **settings/proximity sensor.**

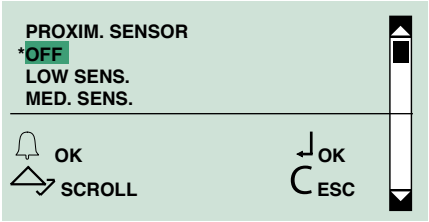

3. Choose between:

   off (default)
   low
   medium
   high

When the speaker unit camera is running (during a call or during self-ignition), the LED sun shade (Art. 3459) lighting is disabled, to prevent it from interfering with the recording

2.13 BRIGHTNESS

Lighting for entrance panel is provided by the “LED sun shade” accessory Art. 3459

The LED sun shade consists of a courtesy LED side light (always on) and several intensity-adjustable LEDs.

LED brightness can be controlled automatically or manually:

- **Auto brightness enabled** in this mode a sensor detects the light level in the room and the device provides a suitable amount of light. The light switches off when the device is in standby.
- **Auto brightness disabled** in this mode the light intensity must be set manually (from 0 to 100%) for the enabled status and the standby status.

1. Access programming mode, see ”ACCESSING THE PROGRAMMING MENU.

2. Select: **settings/brightness**

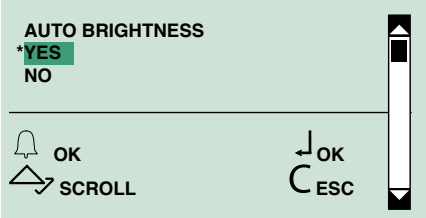

3a. Select YES to enable auto brightness

Or

3b. Select NO (default) to enable manual brightness

When the speaker unit camera is running (during a call or during self-ignition), the LED sun shade (Art. 3459) lighting is disabled, to prevent it from interfering with the recording

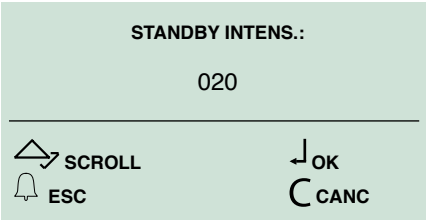

4b. Adjust the light intensity (default 20%) for “standby” status using ∧ ∨ and confirm.

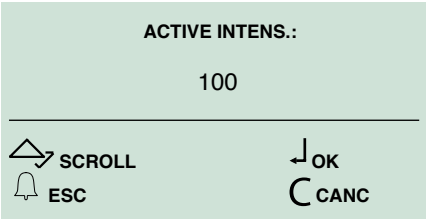

5b. Adjust the light intensity (default 100%) for “enabled” status using ∧ ∨ and confirm.

2.14 WEB SERVER

From this section you can view the network settings of the external unit and restore the default configuration.

2.14.1 VIEW

1. Access programming mode, see ”ACCESSING THE PROGRAMMING MENU.

2. Select: **settings/web server/view**

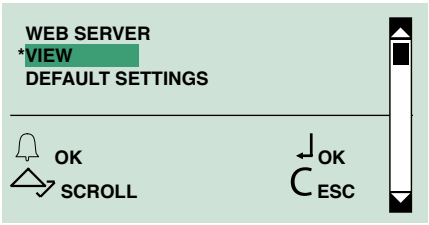

» *The device configurations will be shown in the video.*

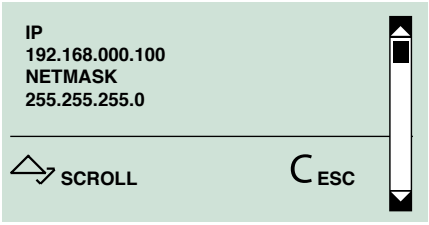

2.14.2 DEFAULT SETTINGS

1. Access programming mode, see ”ACCESSING THE PROGRAMMING MENU.

2. Select: **settings/web server/restore default**

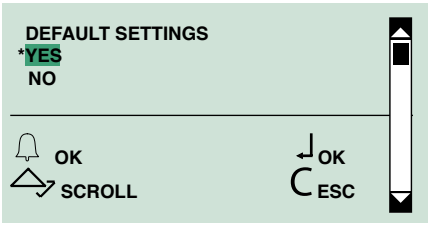

3a. Select YES to confirm the operation to restore the default configuration.

Or:

3b. Select NO (default) to cancel the operation.

2.15 DEFAULT SETTINGS

This function is used to restore the default settings:

Language = Italiano
Second language = disabled
Type of system = Simplebus
Call mode = standard
Access control= disabled
Welcome message = disabled
Screen saver = disabled
Type of download = disabled
System parameters/RS485 address = 0
Keypad sensitivity = medium
Keypad tone = disabled
Proximity sensor = off
Auto brightness = NO
standby intensity = 20
enabled intensity = 100

1. Access programming mode, see ”ACCESSING THE PROGRAMMING MENU.

2. Select: **settings/default settings.**
3. Choose between:

   YES

   NO
4. Confirm.

This procedure resets the directory database and the password and key database

3. Info

From this menu it is possible to view:

- the number of names listed in the directory
- the number of passwords entered
- the number of keys entered
- the RS485 address
- the software version.

1. Access programming mode, see "ACCESSING THE PROGRAMMING MENU"
2. Select: INFO
3. Scroll using ∧ ∨
4. Press C to exit

External data management

SOFTWARE 1249B

(R.I. 003 - SW rev. 2.3 or higher)

INSTALLING THE USB DRIVER FOR CONNECTION TO A PC

This software can only be used while access control is disabled (see "2.6. ACCESS CONTROL")
Make sure that the option to install unsigned drivers (drivers that have not passed Windows Logo testing) is enabled

1. Connect the cable attached to Art. 1249B to the USB connector on the rear of the directory module.
2. Access programming mode, see "ACCESSING THE PROGRAMMING MENU"
3. Select: **Settings/Type of download/USB**

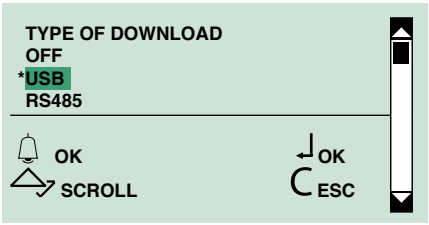

4. The messages "Found new hardware Art. 3451" and "New hardware installation wizard" appear on the PC. . Follow the installation wizard instructions through to completion.

CAUTION: select the Drivers folder located in the Art. 1249B installation folder

USING THE DIRECTORY VIA SOFTWARE ART. 1249B

CAUTION: connection to the PC is via USB; make sure that the drivers have been installed, see section "Installing the USB driver for connection to a PC".

1. Connect the cable attached to Art. 1249B to the USB connector on the rear of the directory module.
2. Access programming mode, see "ACCESSING THE PROGRAMMING MENU"
3. Select: **Settings / Type of download / USB**

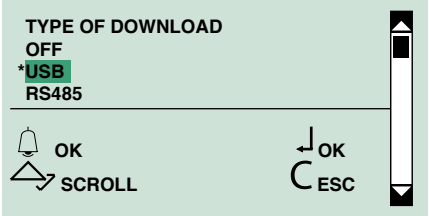

4. Run software Art. 1249B.
5. Run the download procedure and wait until it is complete.

The system type and call mode selected must correspond with those set on module, see section "2.5. CALL MANAGEMENT".
Make sure in "Parameters configuration" on Art. 1249B that the correct communication port is selected.
If the power supply is cut off while the data downloaded via USB is being saved, the option of resuming the save process will be displayed on the LCD next time the unit is started up

MULTIDOWNLOAD

It is possible to use an RS485 network to connect multiple entrance panels to the same PC with software Art. 1249B installed.

In this case each entrance panel must have a different ID CODE (RS485 address), see section "2.2.2 RS485 ADDRESS"

1. Connect the RS485 serial cables to terminals 485D+/485D- on Art. 3451 (see"Connection to a computer via Art. MOXA TCC-80 20022618".).
2. Access programming mode, see "ACCESSING THE PROGRAMMING MENU.
3. Select: **Settings/Type of download/RS485**

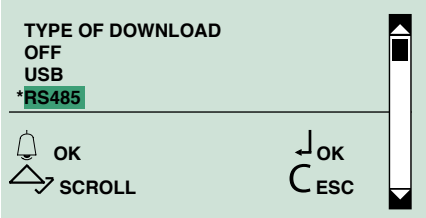

4. Run software Art. 1249B.
5. Run the download procedure and wait until it is complete

The system type and call mode selected must correspond with those set on the entrance panel (see section "2.5. CALL MANAGEMENT").
Make sure in "Parameters configuration" on Art. 1249B that the correct communication port is selected.

WEB SERVER

Webserver access allows management (also remotely) of:

The parameters

- the name of the external unit
- the call mode
- activation/deactivation of "access control" mode

Data management

- the insertion, editing, deletion, import and export of directory data (names, codes, passwords and keys)
- enabling and personalization of the welcome message
- personalization of the messages:
  - code insertion
  - names scrolling
  - names search

Product updating:

- firmware updating
- web page updating

It does not allow you to change the system type (SB or SBTOP).

CONNECTION TO THE WEB SERVER VIA ETHERNET

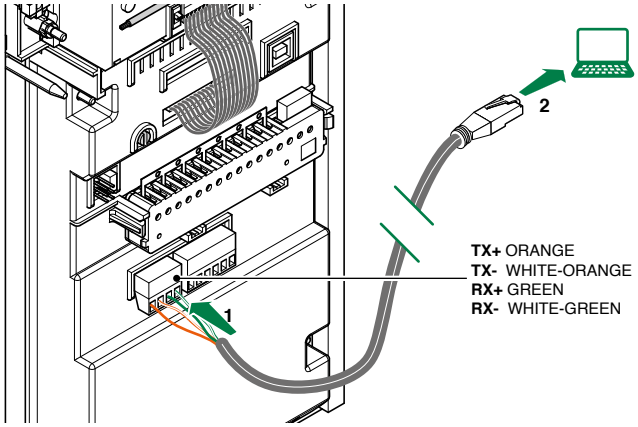

1. Connect the external unit to your PC using a crimped ethernet cable, as shown in the figure.
2. Assign to your PC a network address that is compatible with the external unit (default configuration of the external unit: IP address192.168.0.100, Netmask 255.255.255.0, Gateway 192.168.0.1)
3. Open a browser, type the IP address of the webserver in the address bar (default: 192.168.0.100) and press ENTER.

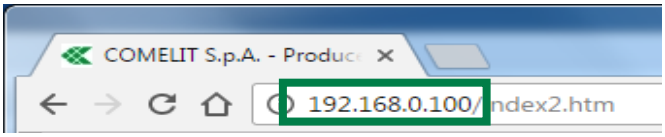

LOCAL CONNECTION TO THE WEB SERVER

✓ ***If the default address of the device (192.168.0.100) belongs to the same network as the router (e.g.: 192.168.0.1) and if the default address of the device (192.168.0.100) is NOT already used by another device in the network.***

▶ connect the entrance panel as shown in the diagram "Connection to a computer via Art. MOXA TCC-80 20022618", to connect the device to the local network.

✓ ***If the default address of the device (192.168.0.100) does NOT belong to the same network as the router (e.g.: 192.168.1.1)***

✓ ***OR if the default address of the device (192.168.0.100) is already used by another device in the network.***

1. Connect the external unit to your PC as described in chapter "CONNECTION TO THE WEB SERVER VIA ETHERNET"
2. Assign to the entrance panel an address that is compatible with the local network and NOT used by any devices already present in the network (e.g.: **192.168.1.130**, Netmask 255.255.255.0, Gateway 192.168.1.1)
3. Connect the entrance panel as shown in the diagram "Connection to a computer via Art. MOXA TCC-80 20022618", to connect the device to the local network.

REMOTE CONNECTION TO THE WEB SERVER

✓ With the PC connected to the system router

1. **Open port 80 on the system router for the IP address of the external unit (default: 192.168.0,100)**

PORT FORWARDING SETTING FOR REMOTE CONNECTION

Port forwarding is the operation that allows the transfer of data from one device to another via a specific communication port. This procedure enables an external user to access a device on a local network.

✓ *With the PC still connected to the system router*

A. Access the browser and enter the IP address of the router in the navigation bar, for example: 192.168.0.1

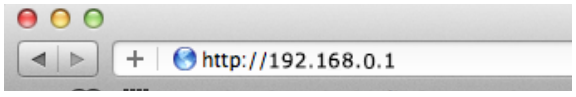

B. Log in by entering the username and password (these can be found in the router user manual).

The port configuration method may differ according to the brand and type of router used

C. Look for the sections "Port Opening" or "Apps and games" or "Port Forwarding" (if not present in the main menu, look for them in Advanced settings) and add the ports you wish to configure.

D. Fill in the configuration panel (see example in the figure below):

- Enter a name.
- Select the desired protocol (TCP).
- For the external port, enter the desired value (80); enter the same value in the Start and End fields to open a single port.
- For the internal port, enter the desired value (80); enter the same value in the Start and End fields to open a single port.
- Enter the IP address of the entrance panel, for example (default= **192.168.0.100**).
- Confirm.

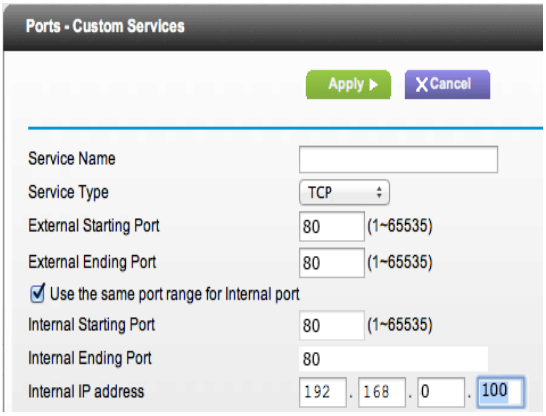

2. Assign a **public static IP address** to your router, or create a **DNS address** to allow remote access to the system

ASSIGN A PUBLIC STATIC IP ADDRESS TO YOUR ROUTER

✓ You will need to purchase a public static address from an Internet Service Provider.

ASSIGN A DYNAMIC DNS ADDRESS TO YOUR ROUTER

✓ The router must have a DNS service.

✓ You will need to register a hostname on a **DNS service provider.**

A. Access the browser and enter the IP address of the router in the navigation bar, for example: 192.168.0.1

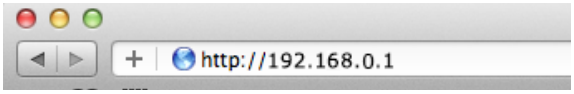

B. Log in by entering the username and password (these can be found in the router user manual).

The port configuration method may differ according to the brand and type of router used

C. Look for the section **"dynamic DNS"** (if not present in the main menu, look for it in the advanced settings)

D. Activate the "dynamic DNS" service

E. Select "Services Provider" and enter the required parameters host name, user name and password and confirm.

3. **Open a browser, type the public IP address (or DNS address) of the webserver in the address bar and press enter.**

USE OF THE WEB SERVER

✓ One the connection with the web server has been established (via ethernet, local or remote connection)

1. Click on “Configuration”, “Data management”, “Settings”, “Update” to access the relative sections.
2. Enter the access data,

   by default:

   Username: **admin**

   Password: **admin**

CONFIGURATION

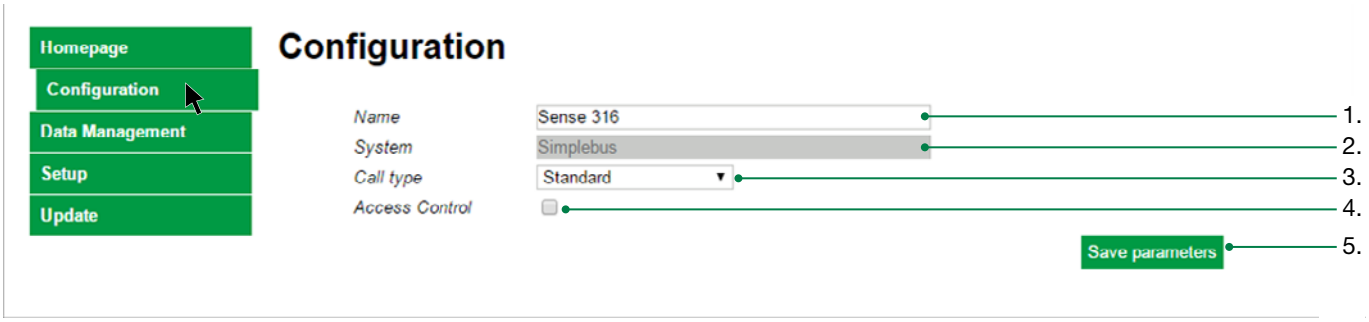

From the “Configuration” page you can set: the name of the external unit, the call type and the access control mode.

1. NAME	Enter the name you wish to assign to the external unit.
2. SYSTEM	Non-editable field for display of the system type (Simplebus/Simplebus Top) configured on the external unit.
3. CALL TYPE	Select the desired call mode from the pull-down menu (choose from: *Standard, Indirect code, Immotec, Immotec with indirect code)* as described in the chapter **“2.5. CALL MANAGEMENT”**.
4. ACCESS CONTROL	Select/Deselect to Enable/Disable the access control function (see the chapter **“2.6. ACCESS CONTROL”**).
5. SAVE PARAMETERS	Press the button to save the configuration.

DATA MANAGEMENT

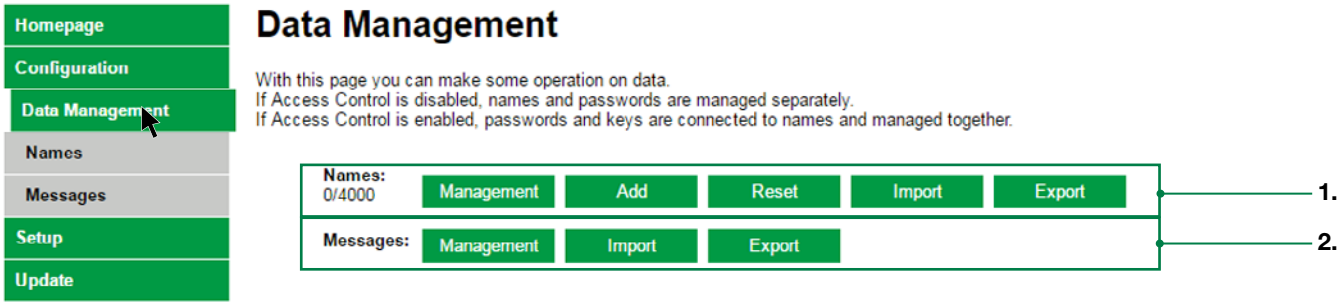

The "Data management" page gives quick access to management of directory data and warning messages.

1. NAMES	Quick access buttons for management of names, codes and passwords in the directory. ***If Access Control is deactivated, names and passwords are managed separately and keys cannot be used.*** Names: 0/4000 — Management, Add, Reset, Import, Export Passwords: 0/4000 — Management, Add, Reset, Import, Export Messages: Management, Import, Export
2. MESSAGES	Quick access buttons for management of the warning messages of the external unit.

NAME MANAGEMENT

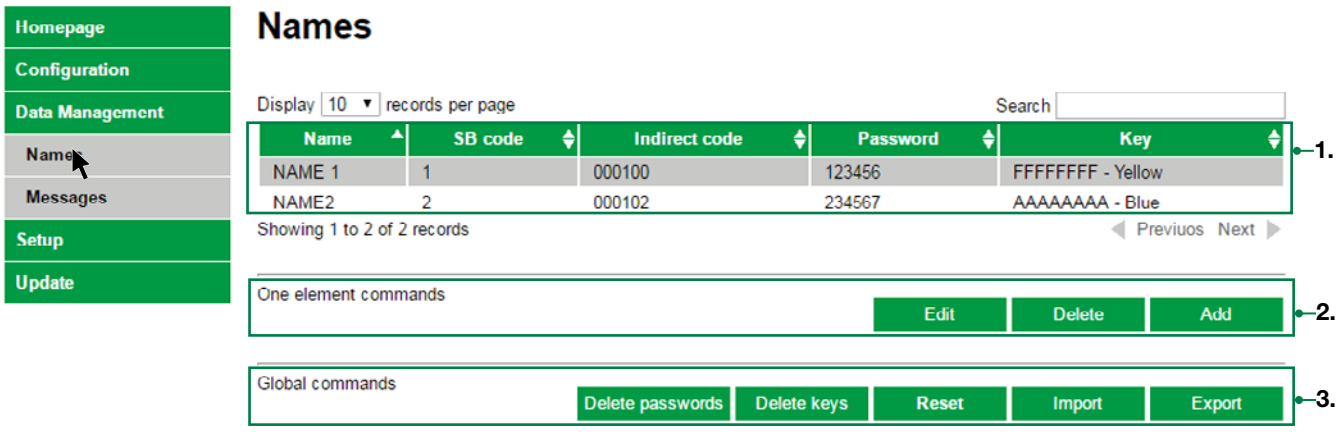

From the page "Data management / Names you can edit, delete, add, import and export names, passwords and access keys

1. TABLE	Table showing entered data. ***If Access Control is deactivated, names and passwords are managed separately.*** ***The "Key" column is only present when Access Control is activated.*** ***The "Indirect code" column is only present in "indirect code" call mode.***
2. ONE ELEMENT COMMANDS	Commands applied only to a single element in the list.
EDIT	Select the line that you wish to edit and press the "Edit" button to access the names editing page.
DELETE	Select the line that you wish to delete and press the "Delete" button to delete the selected element.
ADD	Press "Add" if you wish to add a new element to the list.
3. GLOBAL COMMANDS	Commands applied to ALL the elements saved in the directory
DELETE PASSWORDS	Press the button to delete all the passwords saved in the directory.
DELETE KEYS	Press the button to delete all the keys saved in the directory.
RESET	Press the button to delete all the elements in the directory.
IMPORT	Press the button to import the previously exported data.
EXPORT	Press the button to export the directory in a **.csv** file

Password Management (only with Access Control deactivated)

From the "Password Management" page you can edit, delete, add, import and export passwords.

► Proceed as described for "Name Management".

ADD NAME

▶ From the "Data Management" page or from the "Data management/Names" page, press "Add" to open the "Add name" page.

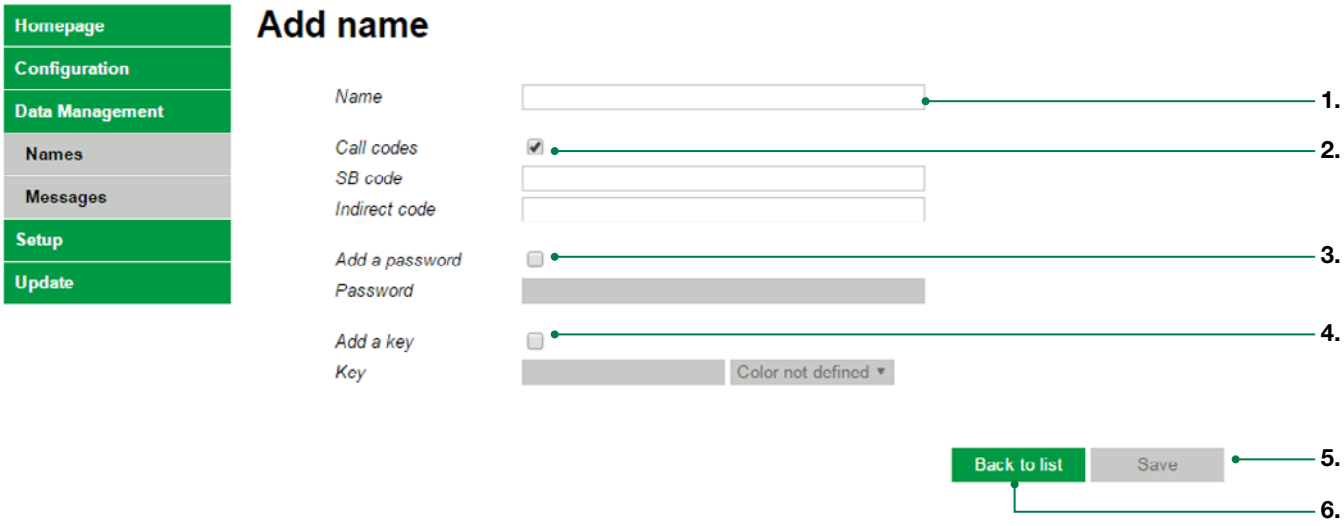

From the "Add name" page you can save names, codes, passwords and access keys.

1. NAME	Enter the name you wish to assign to the element in the directory.
2. CALL CODES	Select/deselect to enable/disable call codes.
SB CODE	Enter the Simplebus code.
INDIRECT CODE	Enter the indirect code. ***Available only in "indirect code" call mode.***
3. ADD A PASSWORD	Select/deselect to associate/disassociate a password with the name. ***If Access Control is deactivated, passwords are managed separately.*** 
PASSWORD	Enter the password you wish to associate with the name.
4. ADD A KEY	Select/deselect to associate/disassociate a key with the name. ***If Access Control is deactivated, keys cannot be used.***
KEY	**1.** Enter the identification code (printed on the key) of the key that you wish to associate with the name. **2.** Select from the pull-down menu the colour you wish to associate with the key.
5. SAVE	Press the button to save the configuration. After saving, press "**New**" if you wish to save a new element.
6. BACK TO LIST	Press the button to return to the Names Management page.

Add Password (only with Access Control deactivated)

From the "Add Password" page you can save passwords.

▶ Proceed as described for "Add Name".

EDIT NAME

► From the Data management/Names page, select the record that you wish to edit [1.] and press the "Edit" button [2.] to access the "Edit name" page.

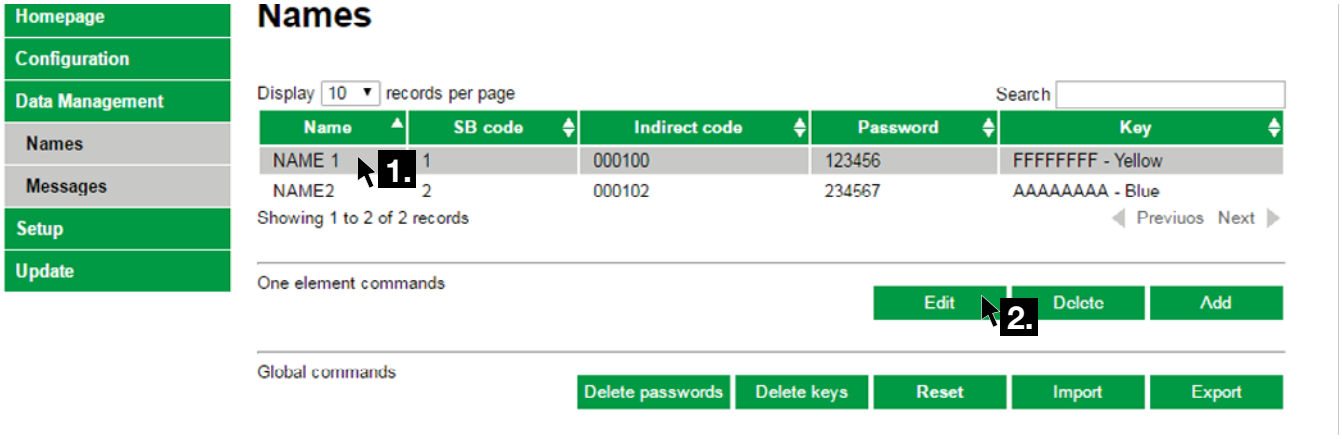

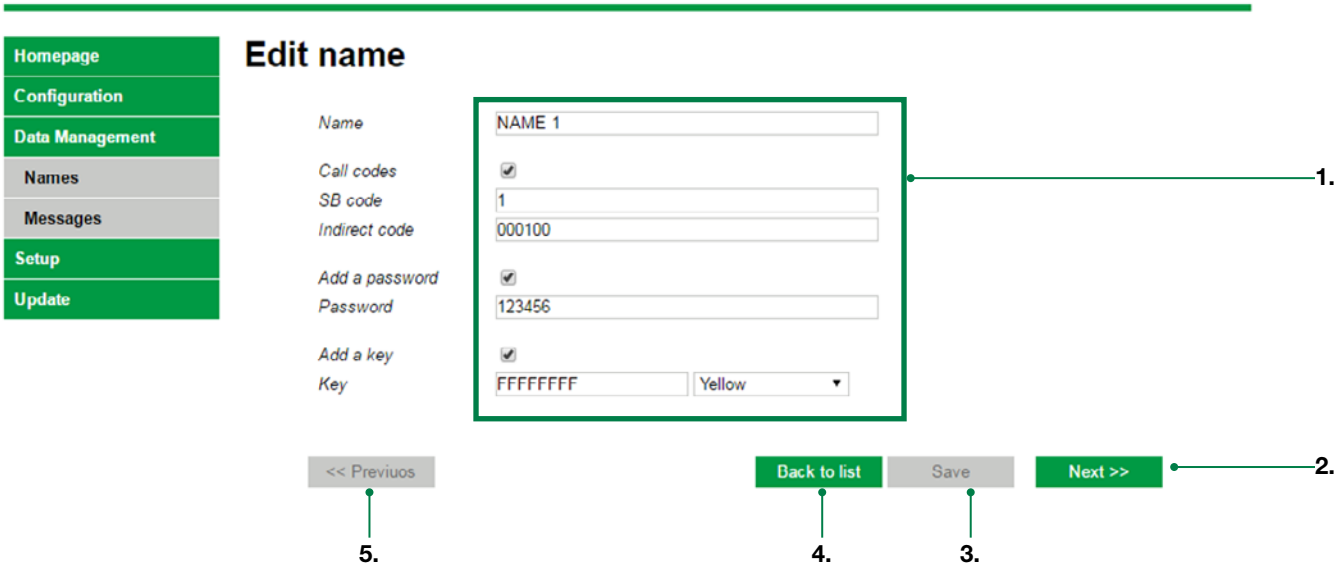

From the "Edit name" page you can save names, codes, passwords and access keys.

1. NAME EDITING FIELDS	Edit the fields you wish to change.
2. NEXT	Press the button to edit the next record in the directory.
3. SAVE	Press the button to save the configuration.
4. BACK TO LIST	Press the button to return to the Names Management page.
5. PREVIOUS	Press the button to edit the previous record in the directory.

Edit Password (only with Access Control deactivated)

From the "Edit Password" page you can edit passwords.

► Proceed as described for "Edit Name".

MESSAGE MANAGEMENT

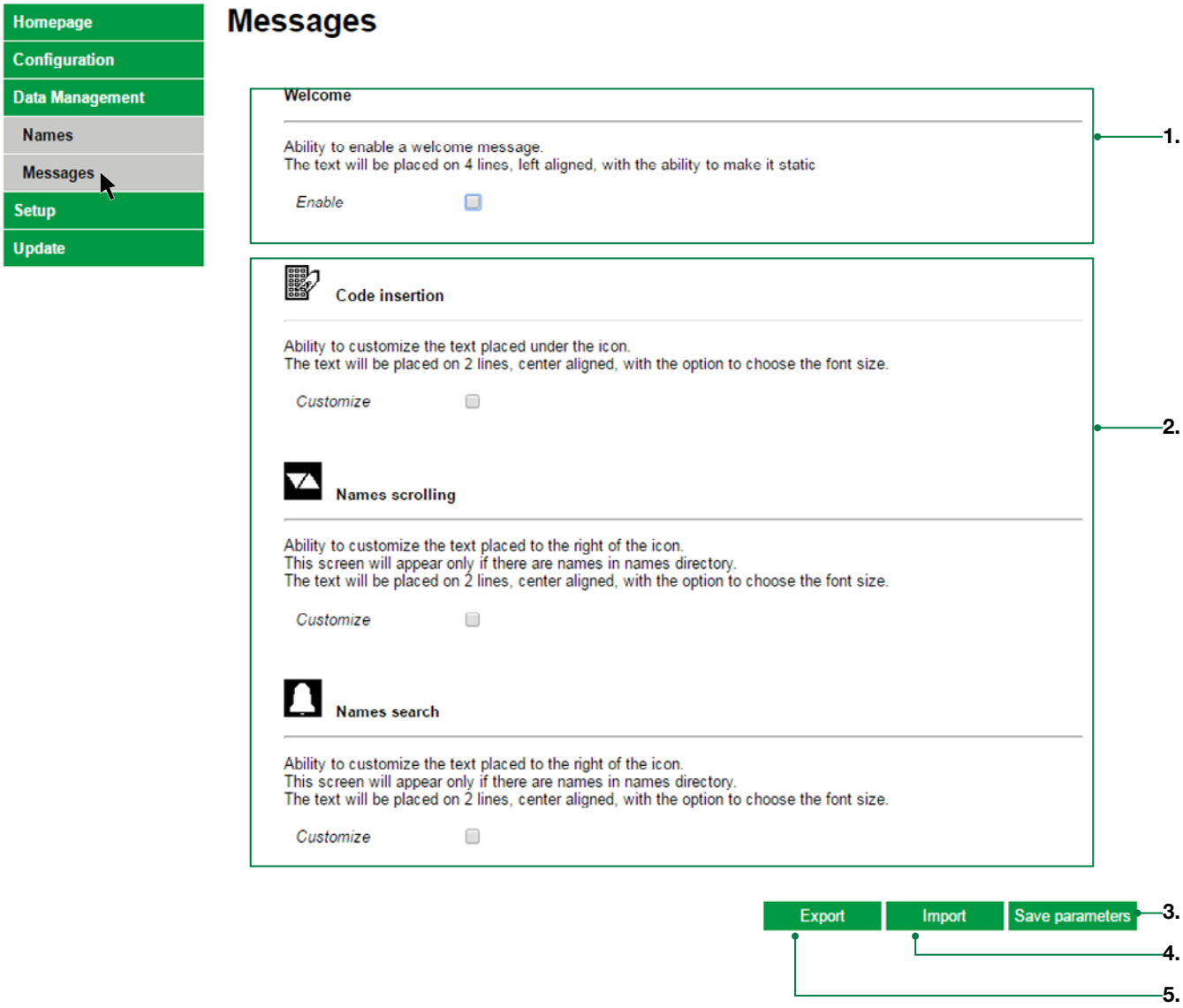

From the "Messages" page you can:

- *enable and customize the welcome message*
- *customize the messages: code insertion, names scrolling, names search*

1. WELCOME	Select "Enable" to enable display of the Welcome message. Follow the on-screen instructions to customize the message.
2. CODE INSERTION	Select "Enable" and follow the on-screen instructions to customize the message.
NAMES SCROLLING	
NAMES SEARCH	

3. SAVE PARAMETERS	Press the button to save the configuration.
4. IMPORT	Press the button to import the previously exported messages.
5. EXPORT	Press the button to export the messages in a **.csv** file

SETUP

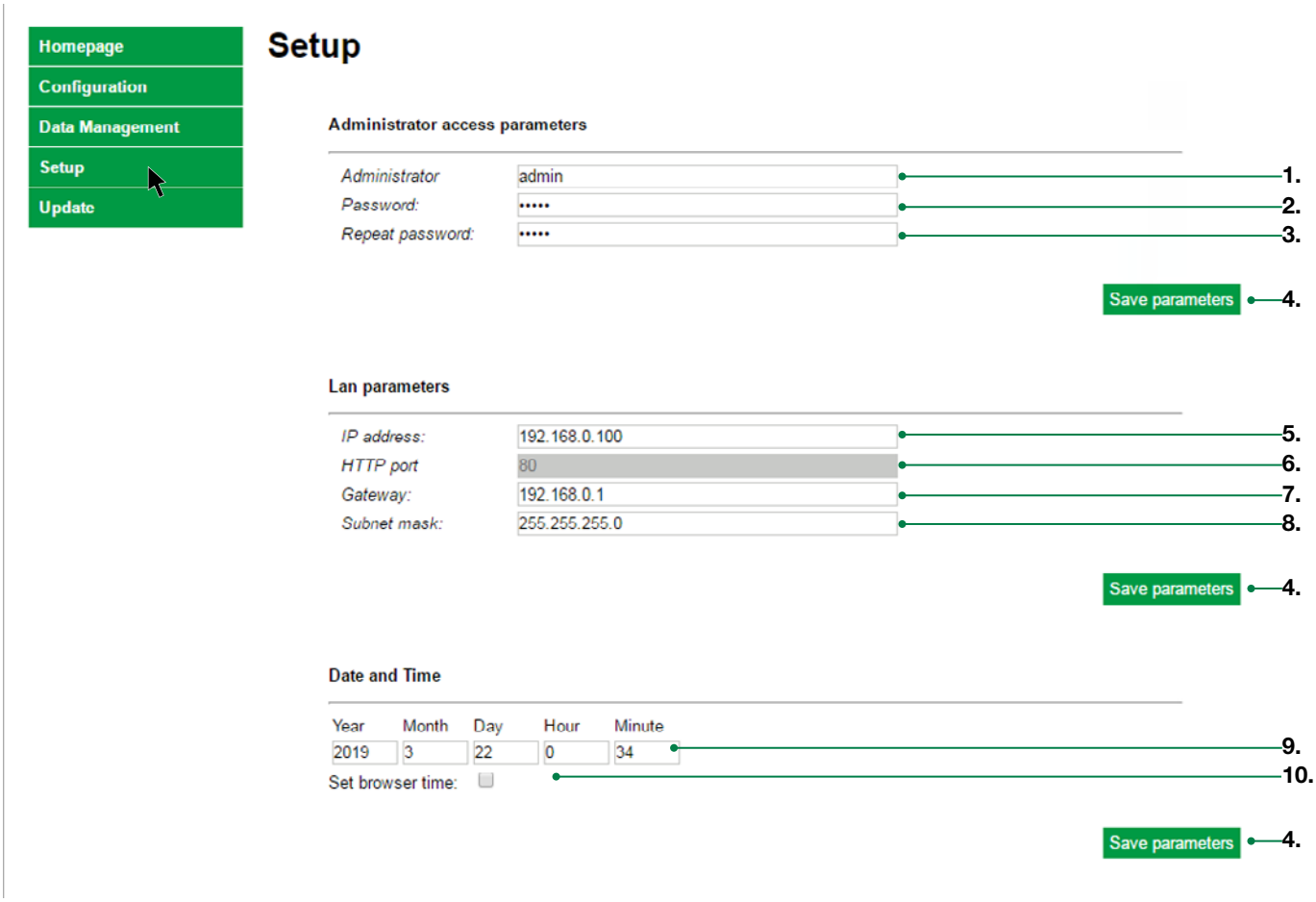

From the "Setup" page you can:

- *configure the parameters for administrator access to the Web server*
- *configure the network parameters*
- *set the date and time*

Administrator access parameters

1. ADMINISTRATOR	Enter the username you wish to assign to the administrator
2. PASSWORD	Enter the password you wish to assign to the administrator
3. REPEAT PASSWORD	Confirm the password

Network parameters

5. IP ADDRESS	Enter the IP address you wish to assign to the external unit (default: 192.168.0,100)
6. HTTP PORT	Displays the port for remote access to the web server. ***Open port 80 on the system router ONLY if you wish to access the web server remotely***
7. GATEWAY	Enter the gateway IP address: (default: 192.168.0.1)
8. SUBNET MASK	Enter the subnet mask (default: 255.255.255.0)

Date and time

9. YEAR MONTH DAY HOUR MINUTE	Complete the fields to manually set the date and time.
10. SET BROWSER TIME	Select to set the browser time.

4. SAVE PARAMETERS	Press the button to save the configuration.

UPDATE

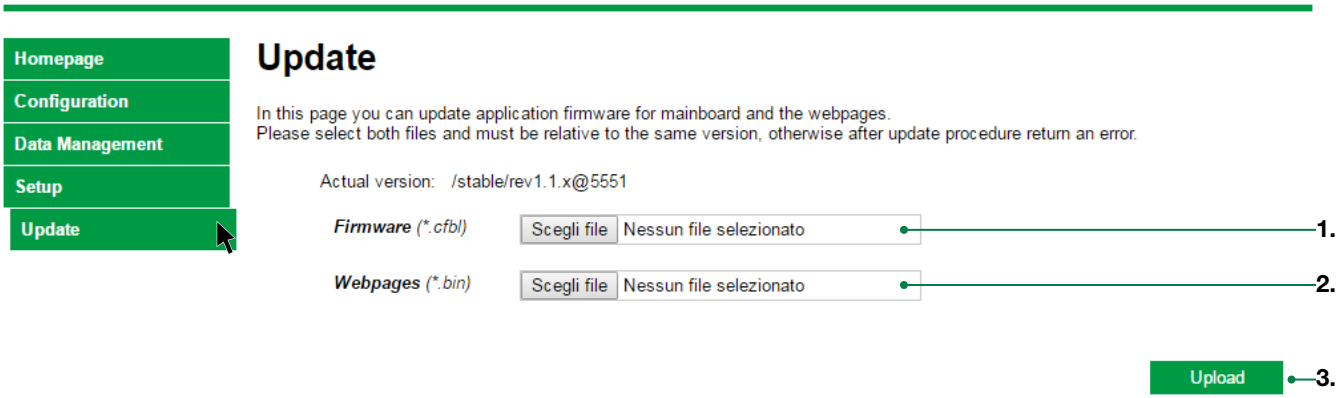

From the "Update" page you can:

- *view the version of the Firmware and update it,*
- *update the web pages*

1. FIRMWARE	Press "Select file" to upload the respective update files
2. WEB PAGES	Press "Select file" to upload the respective update files
3. UPLOAD	Press the button to start the update. » *On completion of the upload, the device will restart.* ***Firmware and web pages must both be for the same version, otherwise an error message will be generated.***

Table of contents

Warning

Access control accessory module for external units, 316 - Art. 3458 533

LED canopy Art. 3459 538

Fitting procedure Art. 3460/2-/4-/6-/9-/12 539

Surface-mount housing - Art. 3462/2 - 3462/4 - 3462/6 540

Access control accessory module for external units, 316 - Art. 3458

*Article **3458** is a flush-mounted accessory with 3mm thick stainless steel plate for housing an access control module. Can be used in combination with all the entrance panels in the 316 range.*

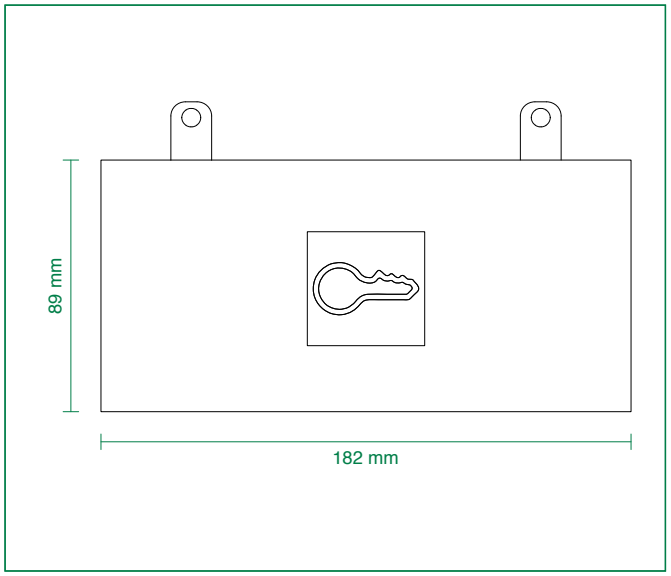

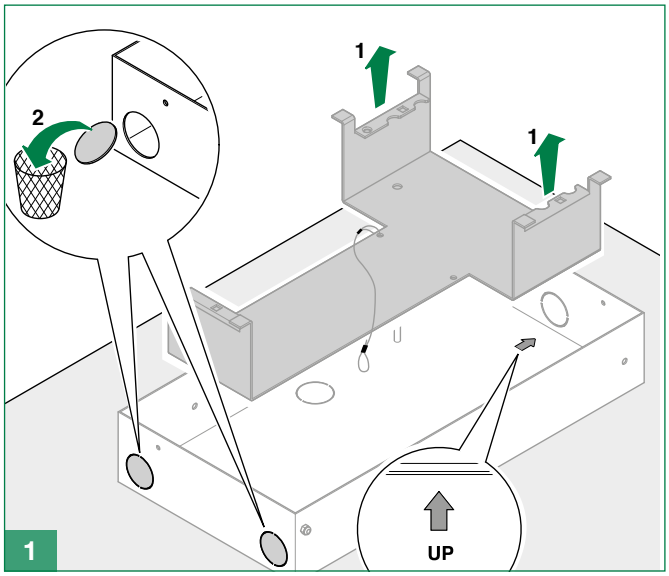

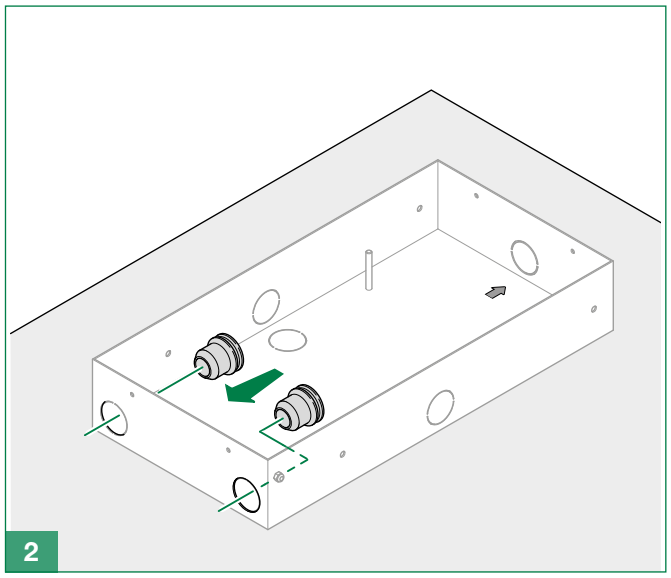

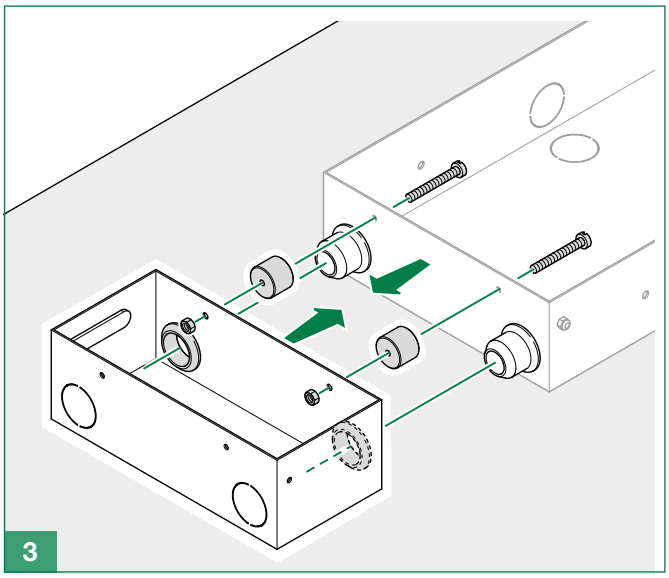

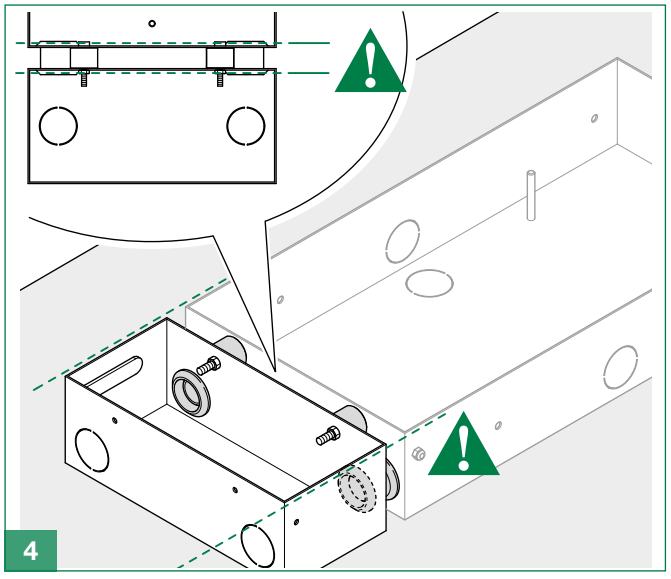

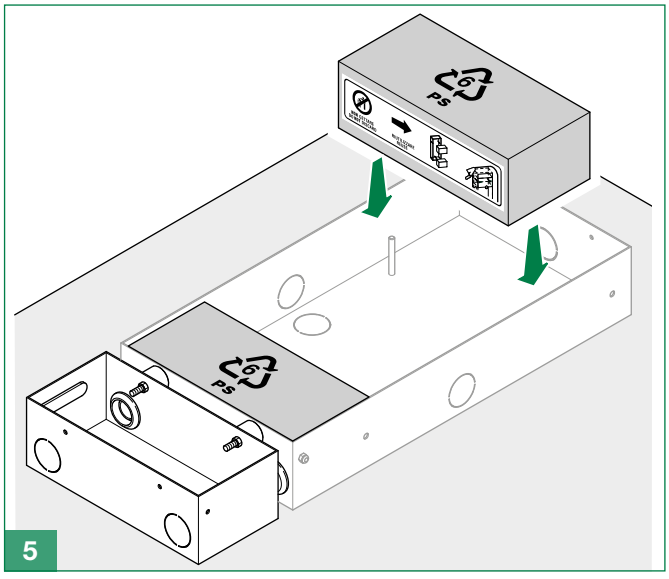

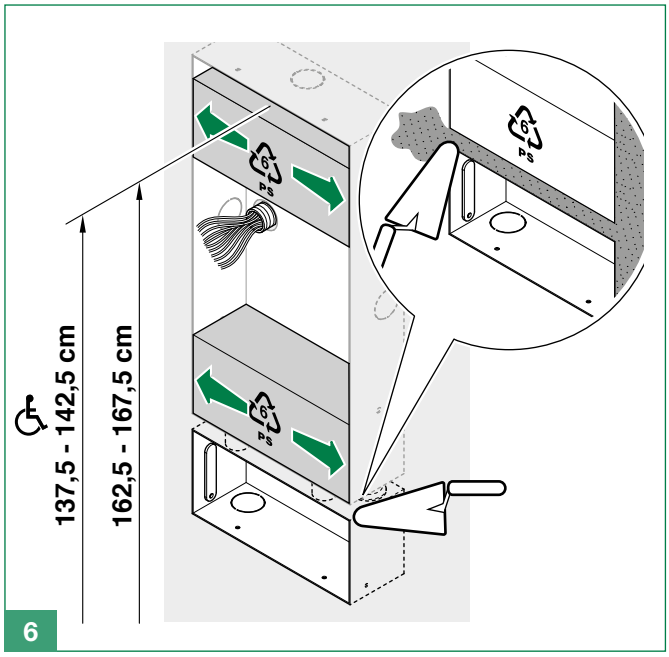
137,5 - 142,5 cm
162,5 - 167,5 cm
6

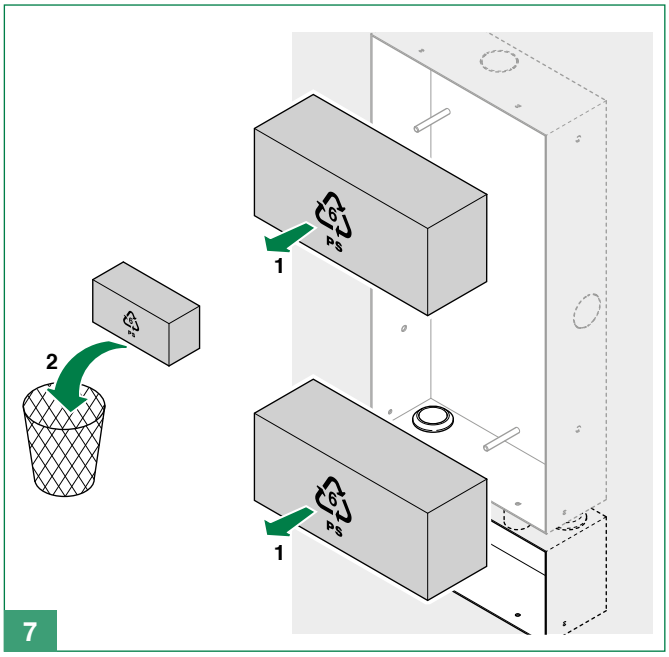
1
2
1
7

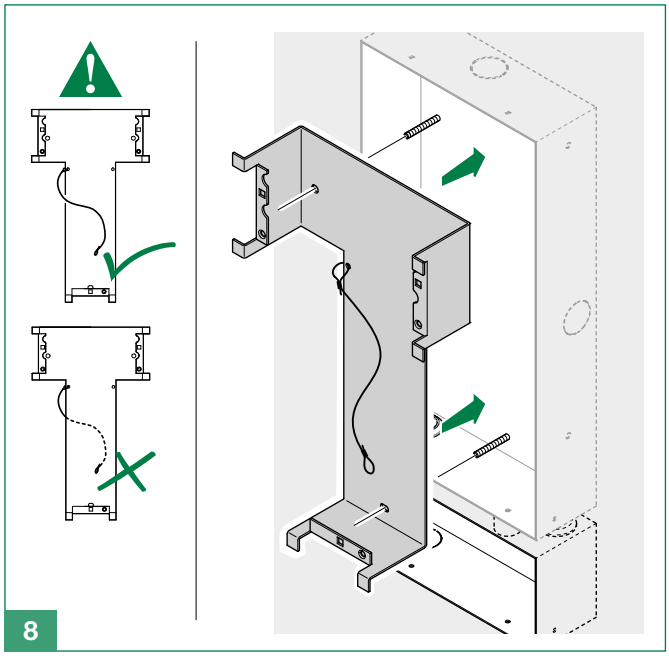
8

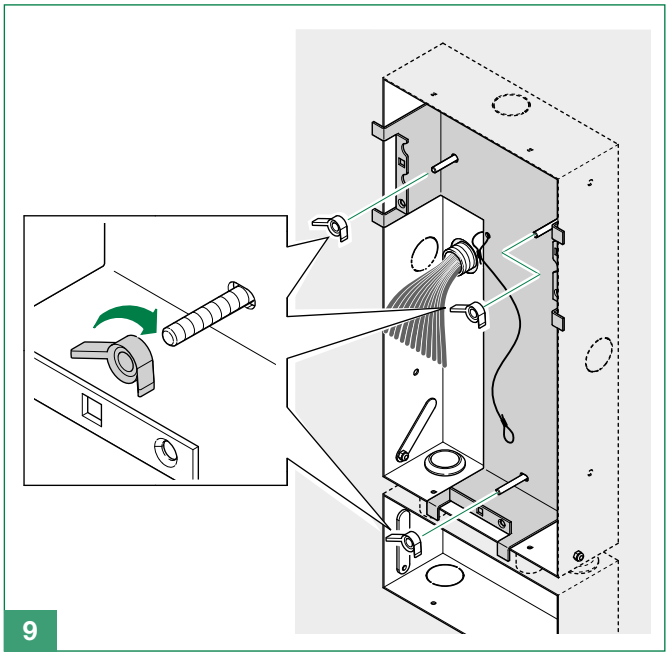
9

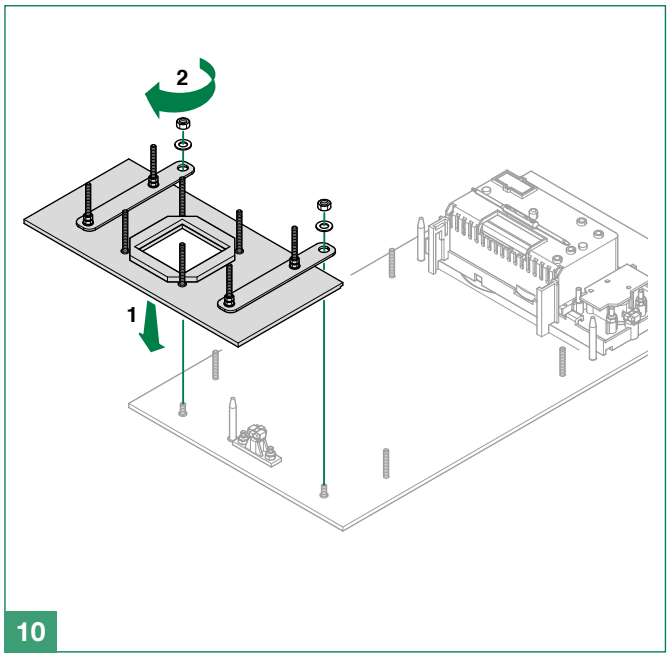
2
1
10

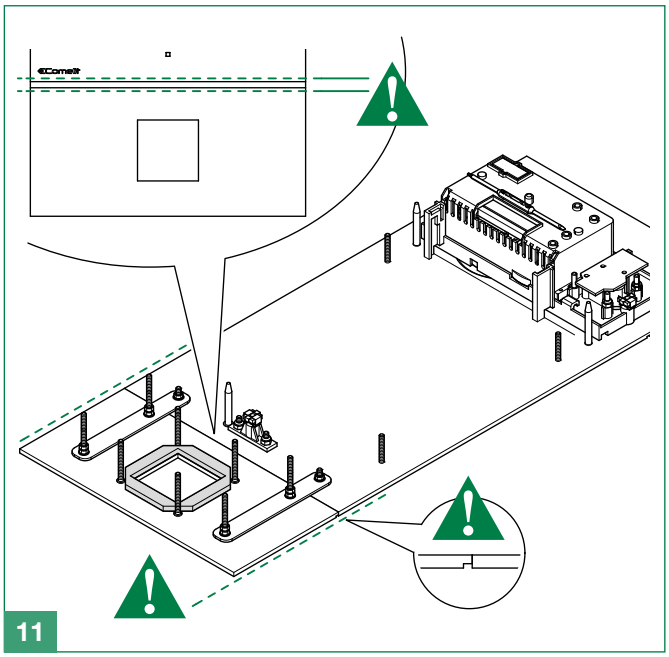
11

With Art. SK9000I - SK9001I - SK9030I Comelit

Device connection: see the technical manual for Art. SK9000I - Art. SK9001I - Art. SK9020 - Art. SK9030I.

Available to download from: www.comelitgroup.com



12-A1

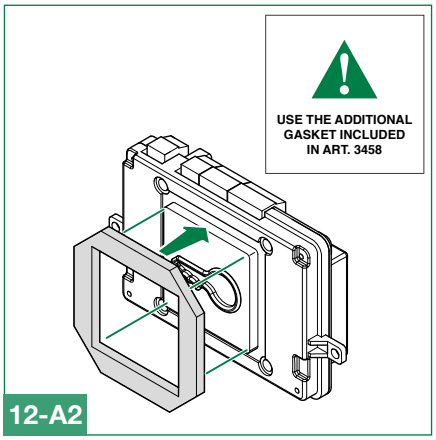

12-A2

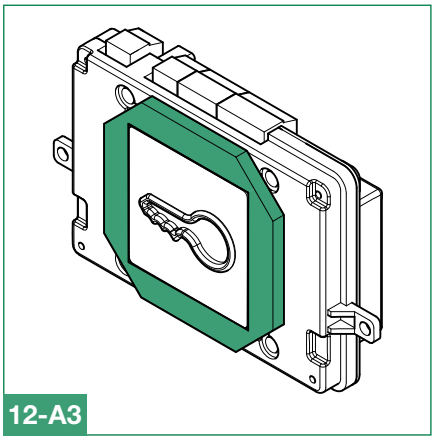

12-A3

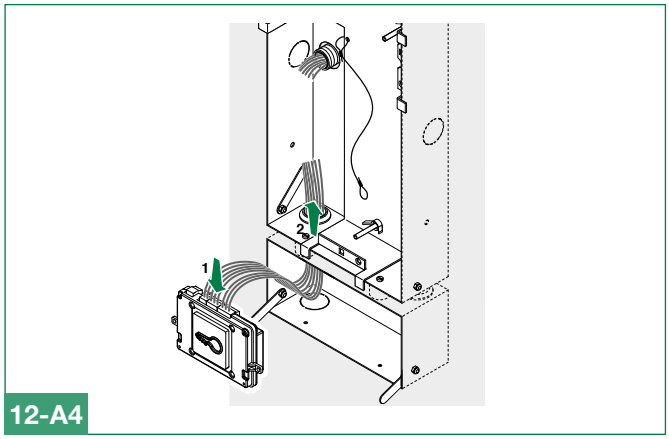

12-A4

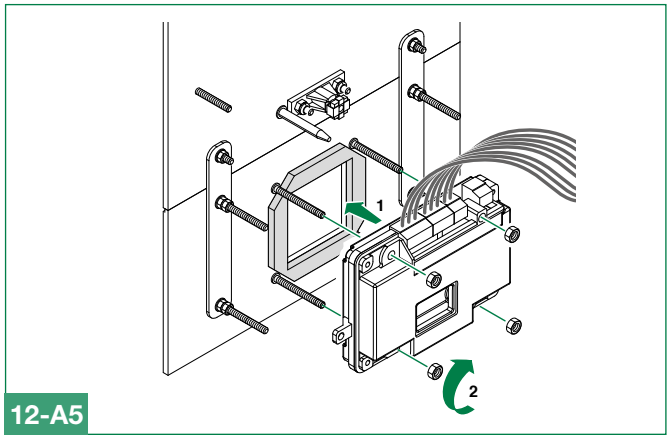

12-A5

With third-party proximity reader

Device connection: see third party access reader manual.

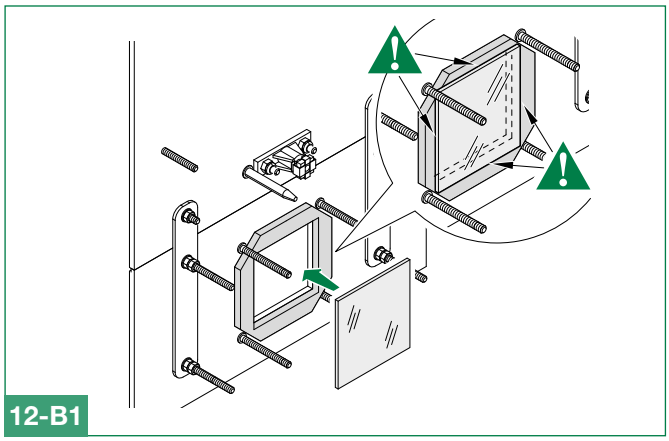

12-B1

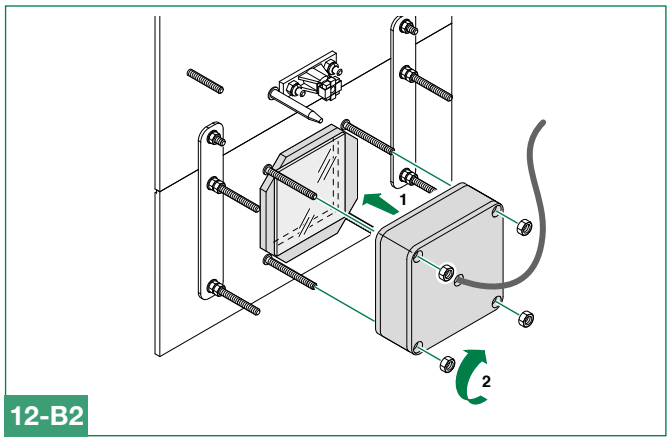

12-B2

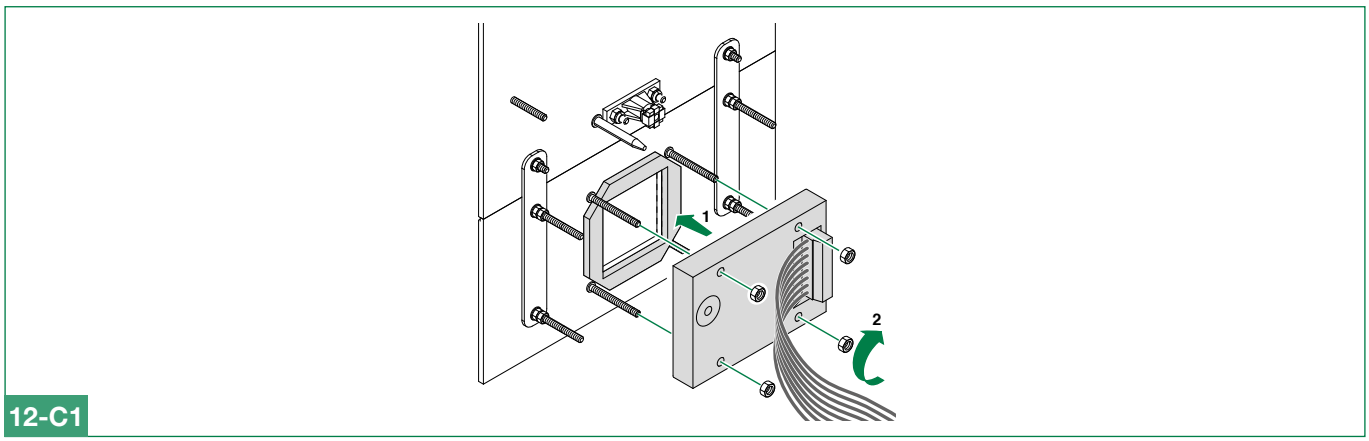

12-C1

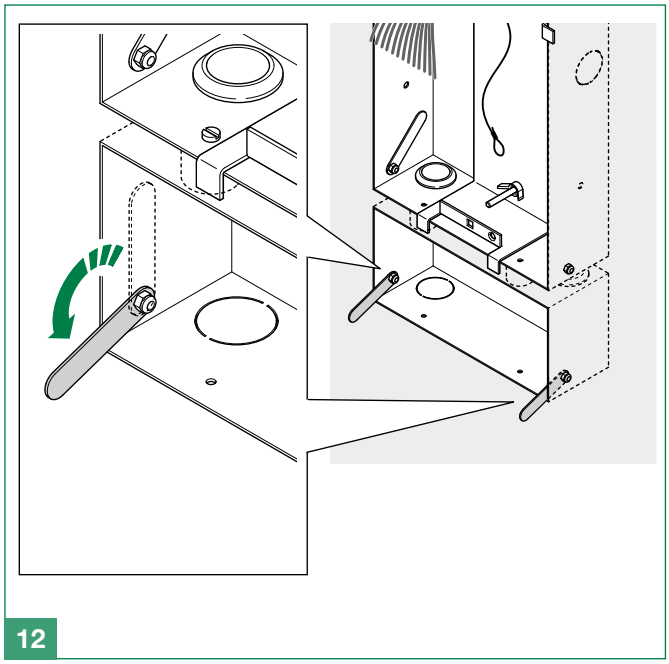

12

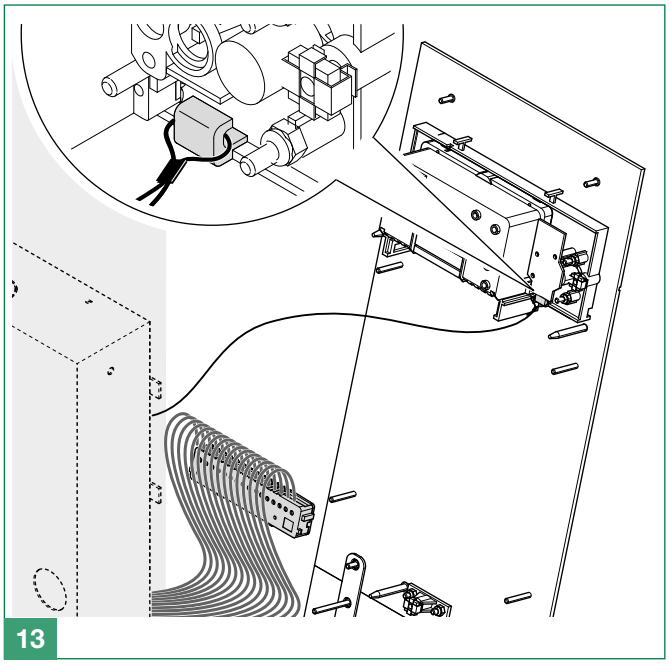

13

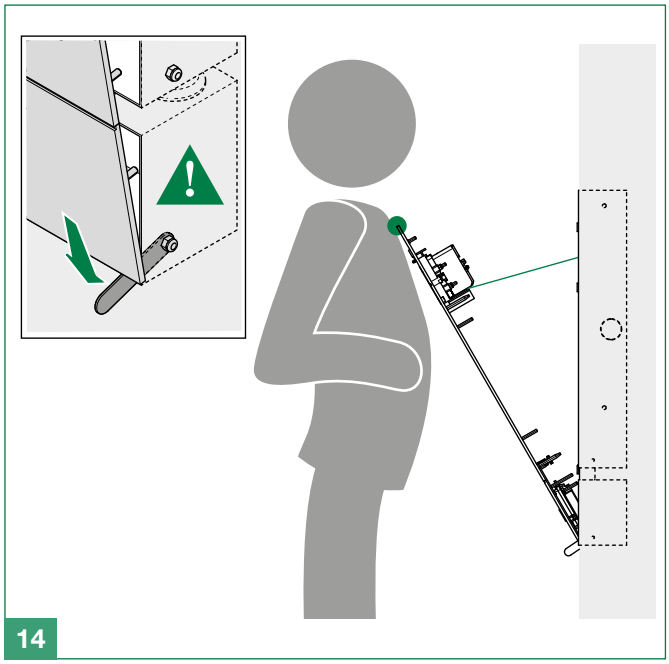

14

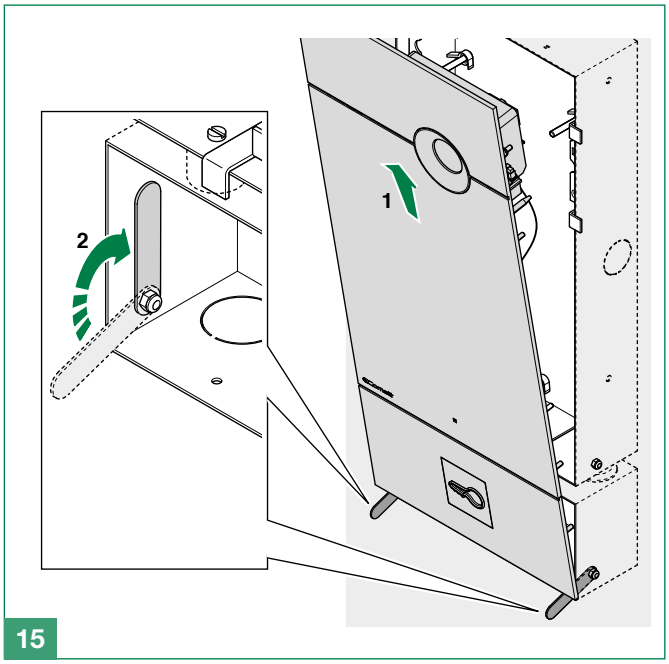

15

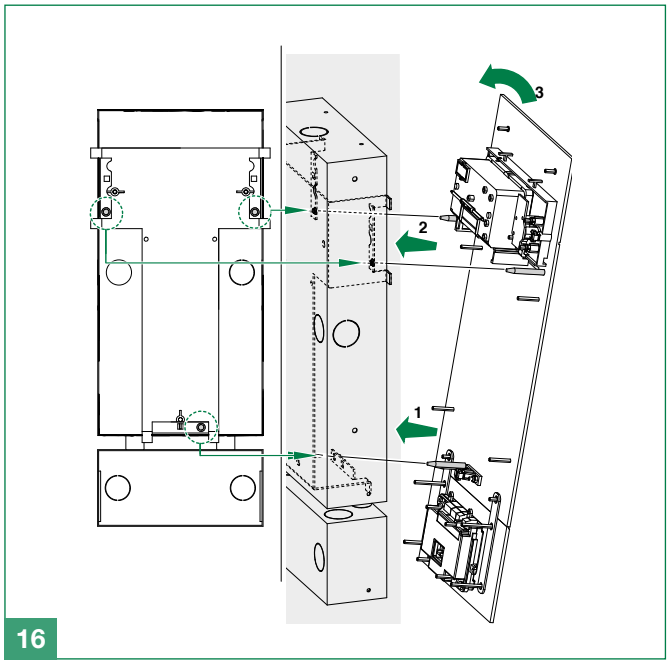

16

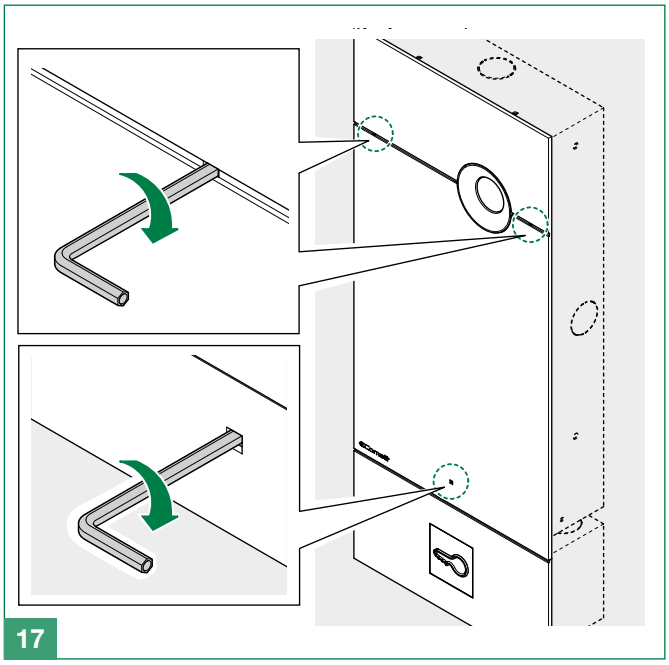

17

Mounting keypad panel

* (A;B) Measurements referring to the 316 entrance panel in use: see corresponding manual.

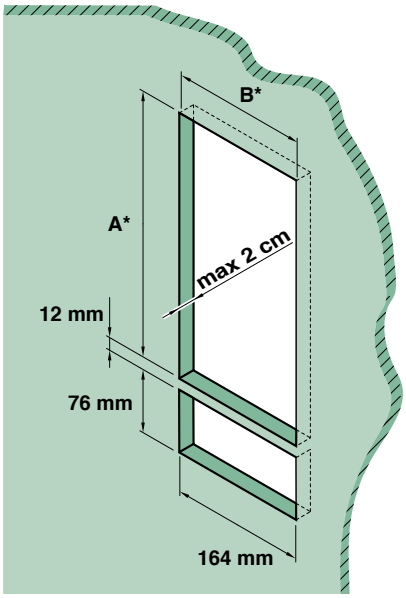

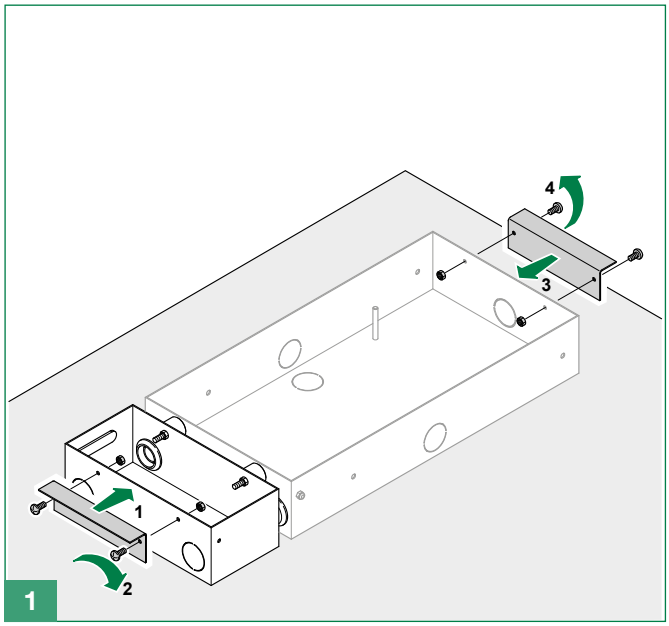

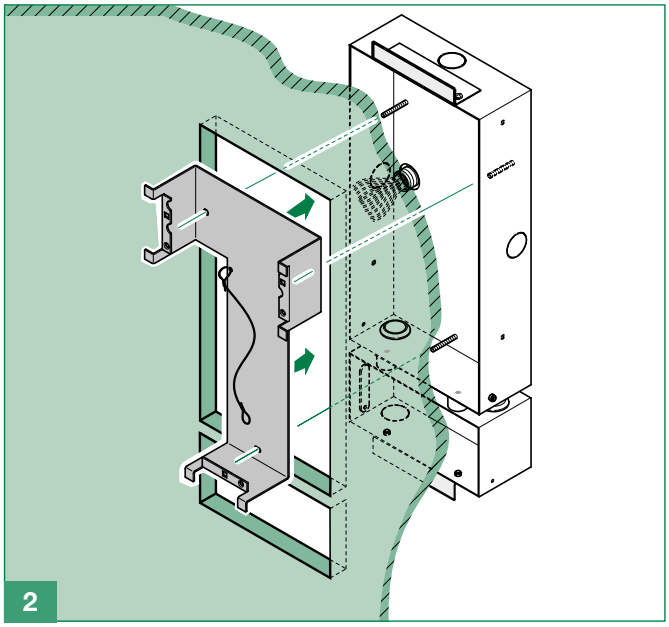

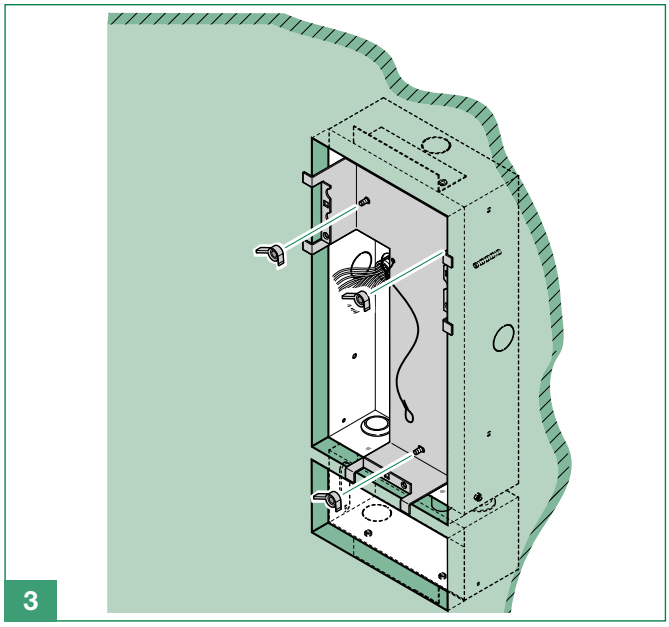

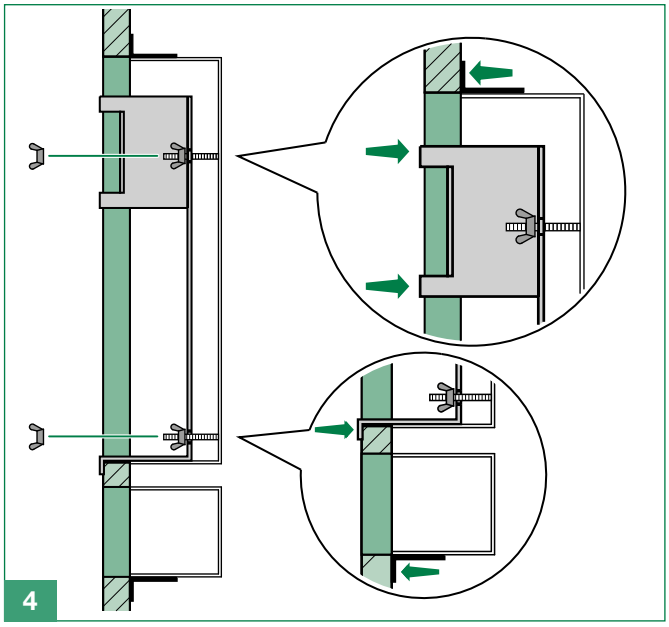

LED canopy Art. 3459

Article **3459** *is an LED canopy for lighting entrance panels Art. 3451AS - 3451S and Art. 3452S.*
The lighting is controlled by the proximity and dusk sensors pre-installed in the entrance panels.

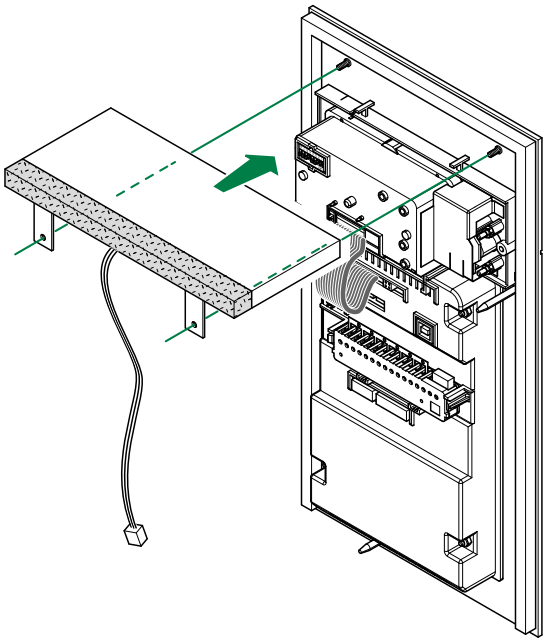

1

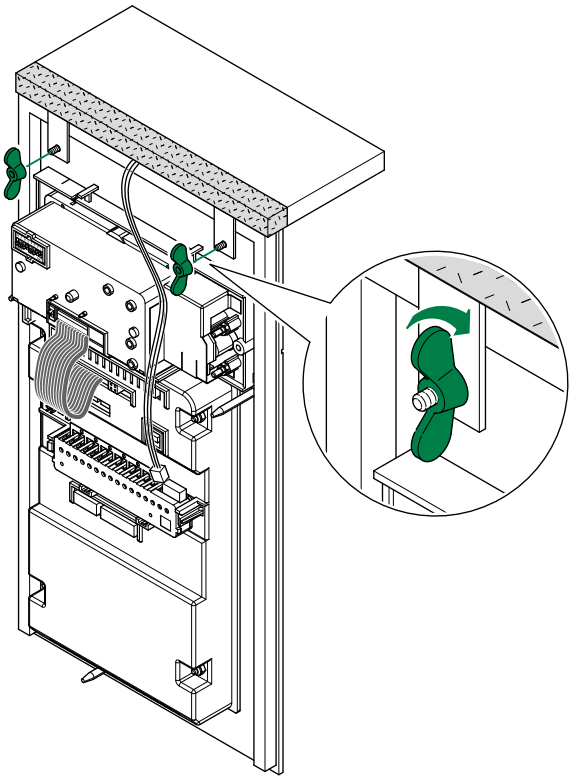

2

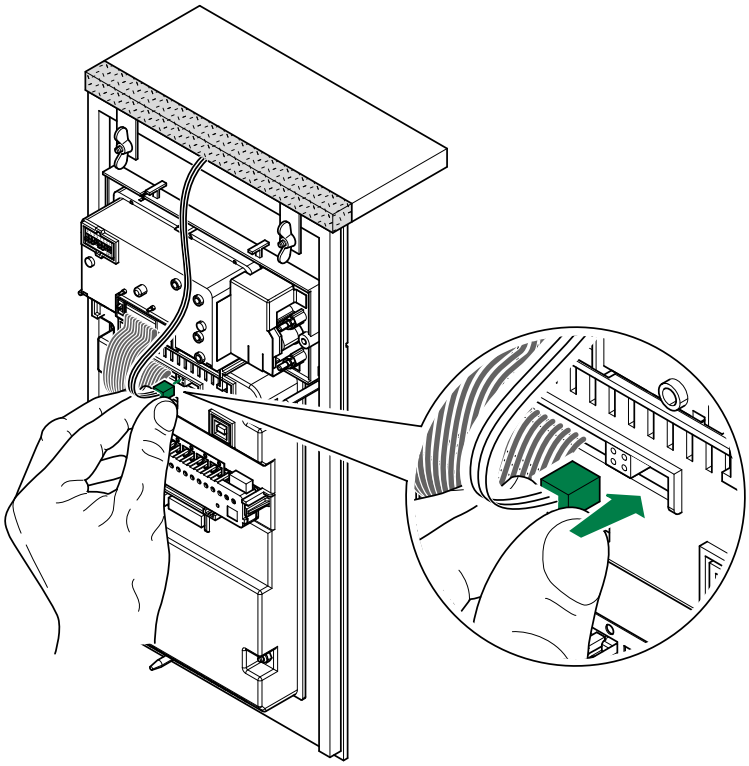

3

Fitting procedure Art. 3460/2-/4-/6-/9-/12

Articles **3460/2-/4-/6-/9-/12** *are flush-mount boxes for entrance panels in the 316 range.*

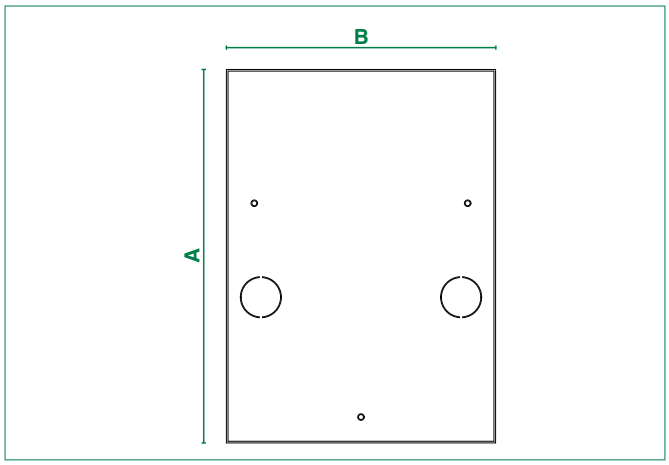

ART.	DIM. A	DIM. B
Art. 3460/2	227,5 mm	164 mm
Art. 3460/4	273,5 mm	164 mm
Art. 3460/6	323 mm	164 mm
Art. 3460/9	388,5 mm	164 mm
Art. 3460/12	457,5 mm	164 mm

Use the polystyrene blocks included in the packaging.

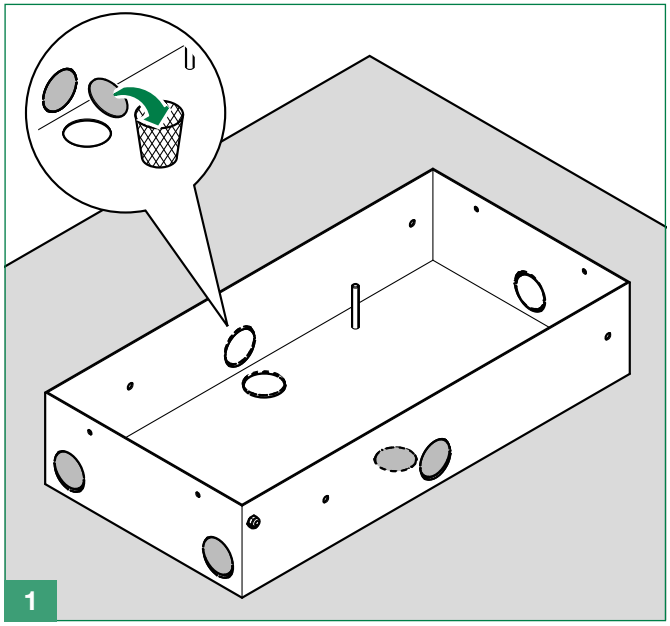

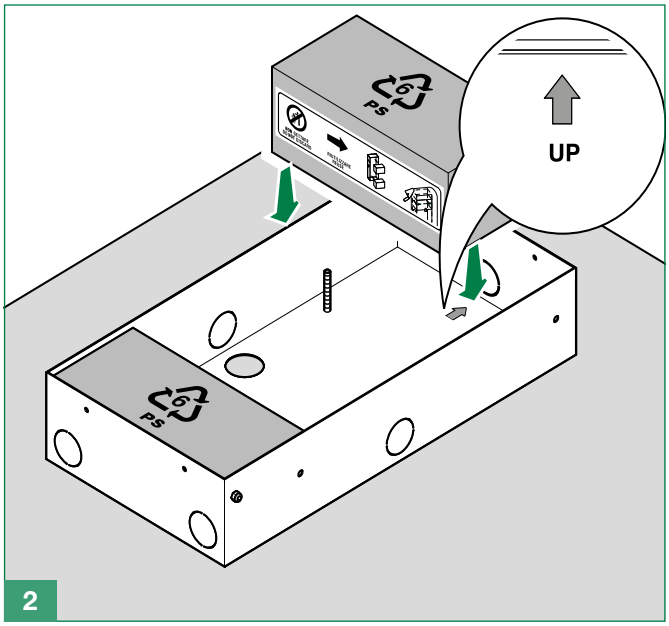

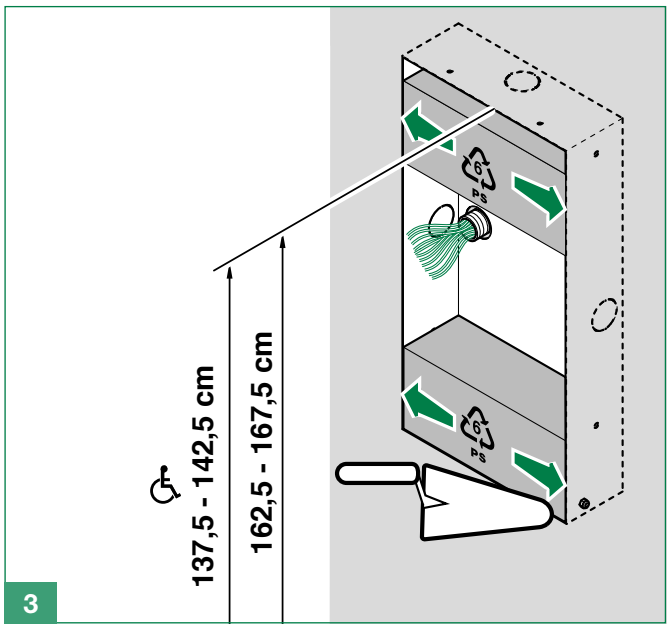

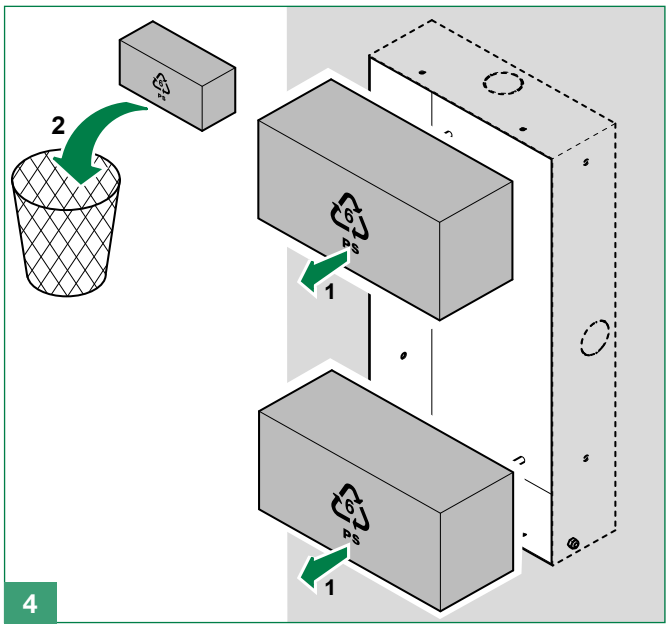

Surface-mount housing - Art. 3462/2 - 3462/4 - 3462/6

Articles **3462/2 /4 /6** *are surface-mount boxes for entrance panels in the 316 range.*

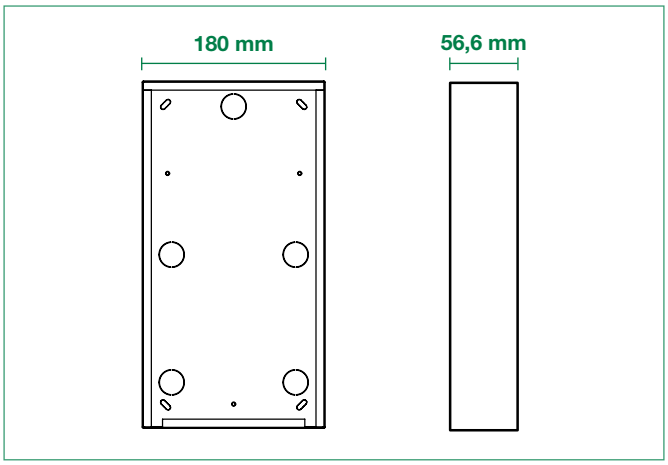

COMPATIBILITY

Art. 3462/2 (h 245 mm)			
3001XVB	3001XAS	3001XAB	
3002XVB	3002XAS	3002XAB	
Art. 3462/4 (h 291 mm)			
3003XVB	3003XAS	3003XAB	
3004XVB	3004XAS	3004XAB	
Art. 3462/6 (h 341 mm)			
3005XVB	3005XAS	3005XAB	3451S
3006XVB	3006XAS	3006XAB	3451AS
3452S	3453S	3454S	

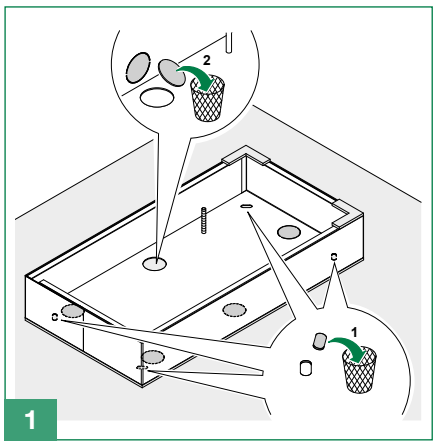

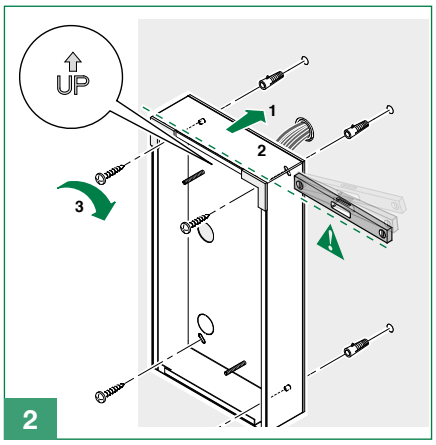

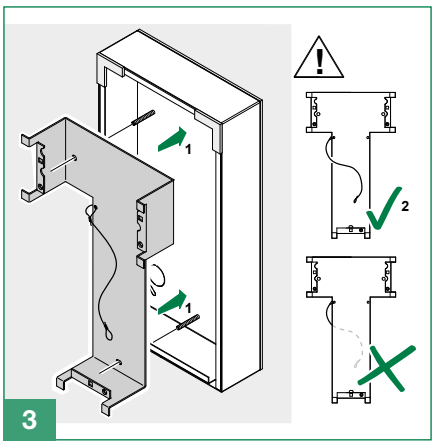

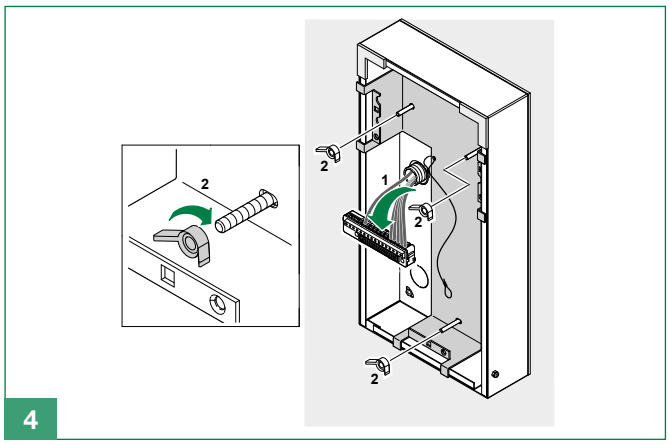

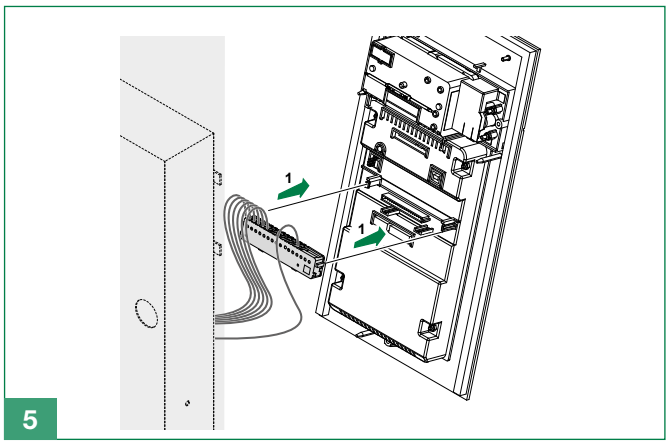

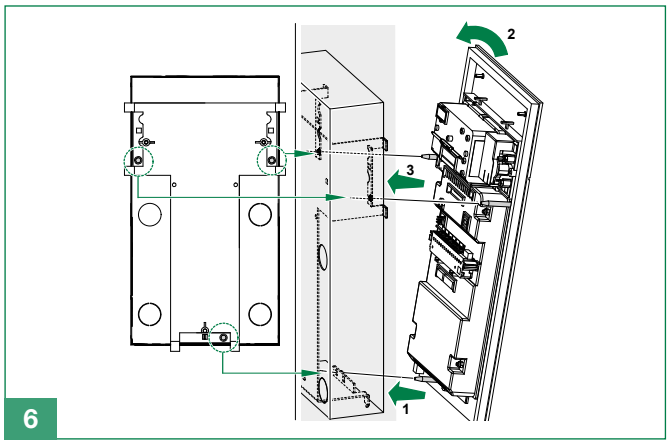

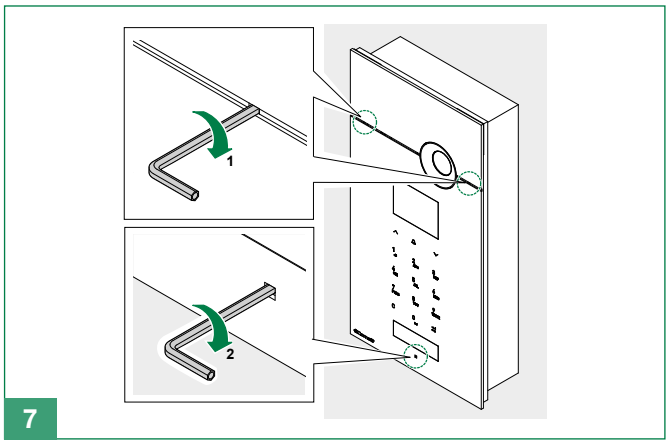

Table of contents

Warning

Description **543**

Installation **544**

- Inserting nameplates 545
- Insertion of name labels 545
- Correct position of the Art. 3063D 546
- Installation in systems with 2 users 547

System performance and layouts **547**

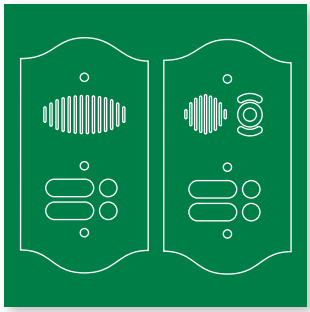

Roma series entrance panel

Description

The Roma series is a flush-mount monolithic entrance panel, with front plate made from 3 mm thick solid brass with PVD coating. To be fitted with an audio/video unit, the choice of which depends on the cabling system used. Complete with flush-mount box. Anthracite and bronze versions available on request.

ROMA SERIES AUDIO ENTRANCE PANEL

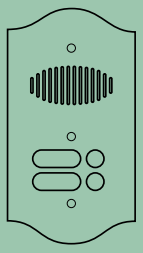

Code	Num. Buttons	Dim. Plate	Dim. Box	No. of lamp holders
3001/RI	1	135x247x3mm	115x181x55mm	1
3002/RI	2	135x247x3mm	115x181x55mm	1
3003/RI	3	135x293x3mm	115x227x55mm	1
3004/RI	4	135x293x3mm	115x227x55mm	1
3005/RI	5	135x339x3mm	115x273x55mm	1
3006/RI	6	135x339x3mm	115x273x55mm	2
3006/2/RI	6	180x292x3mm	160x236x55mm	2
3008/2/RI	8	180x316x3mm	160x259x55mm	2
3010/2/RI	10	180x339x3mm	160x282x55mm	2
3012/2/RI	12	180x362x3mm	160x305x55mm	2
3014/2/RI	14	180x385x3mm	160x328x55mm	4
3016/2/RI	16	180x408x3mm	160x351x55mm	4
3018/2/RI	18	180x431x3mm	160x374x55mm	4
3020/2/RI	20	180x454x3mm	160x397x55mm	4
3022/2/RI	22	180x477x3mm	160x420x55mm	4
3024/4/RI	24	340x362x3mm	320x296x55mm	3
3028/4/RI	28	340x385x3mm	320x319x55mm	6
3032/4/RI	32	340x408x3mm	320x342x55mm	6
3036/4/RI	36	340x431x3mm	320x365x55mm	6
3040/4/RI	40	340x454x3mm	320x388x55mm	6
3044/4/RI	44	340x477x3mm	320x411x55mm	9
3048/4/RI	48	340x500x3mm	320x434x55mm	6

ROMA SERIES AUDIO/VIDEO ENTRANCE PANEL

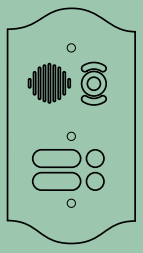

Code	Num. Buttons	Dim. Plate	Dim. Box	No. of lamp holders
3201/RI	1	135x247x3mm	115x181x55mm	1
3202/RI	2	135x247x3mm	115x181x55mm	1
3203/RI	3	135x293x3mm	115x227x55mm	1
3204/RI	4	135x293x3mm	115x227x55mm	1
3205/RI	5	135x339x3mm	115x273x55mm	1
3206/RI	6	135x339x3mm	115x273x55mm	2
3206/2/RI	6	180x292x3mm	160x236x55mm	2
3208/2/RI	8	180x316x3mm	160x259x55mm	2
3210/2/RI	10	180x339x3mm	160x282x55mm	2
3212/2/RI	12	180x362x3mm	160x305x55mm	2
3214/2/RI	14	180x385x3mm	160x328x55mm	4
3216/2/RI	16	180x408x3mm	160x351x55mm	4
3218/2/RI	18	180x431x3mm	160x374x55mm	4
3220/2/RI	20	180x454x3mm	160x397x55mm	4
3222/2/RI	22	180x477x3mm	160x420x55mm	4
3224/4/RI	24	340x362x3mm	320x296x55mm	3
3228/4/RI	28	340x385x3mm	320x319x55mm	6
3232/4/RI	32	340x408x3mm	320x342x55mm	6
3236/4/RI	36	340x431x3mm	320x365x55mm	6
3240/4/RI	40	340x454x3mm	320x388x55mm	6
3244/4/RI	44	340x477x3mm	320x411x55mm	9
3248/4/RI	48	340x500x3mm	320x434x55mm	6

Installation

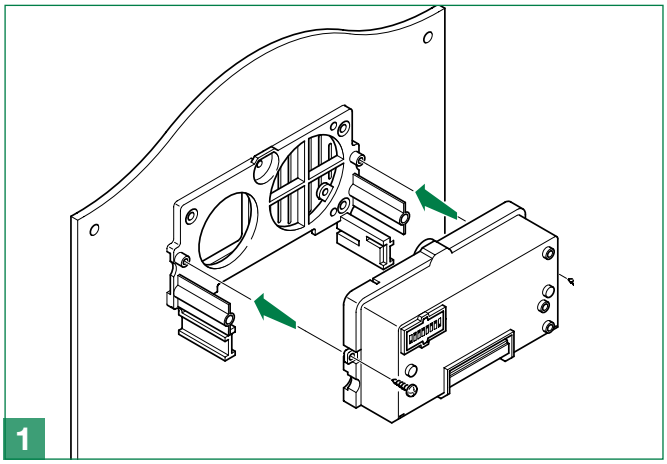

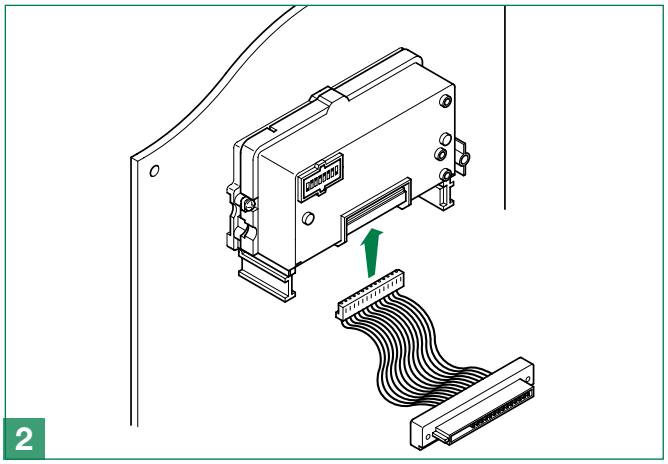

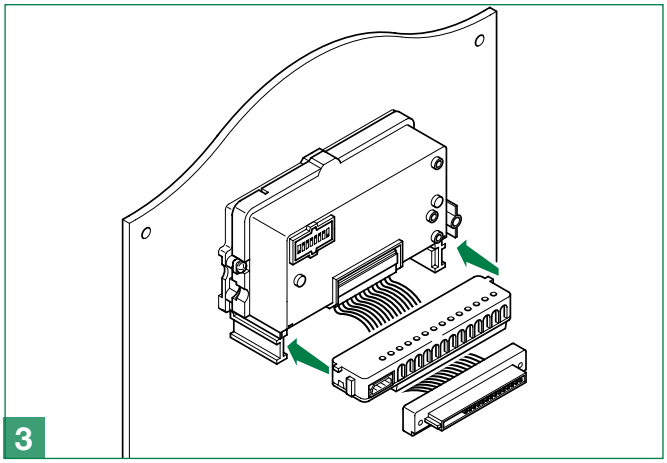

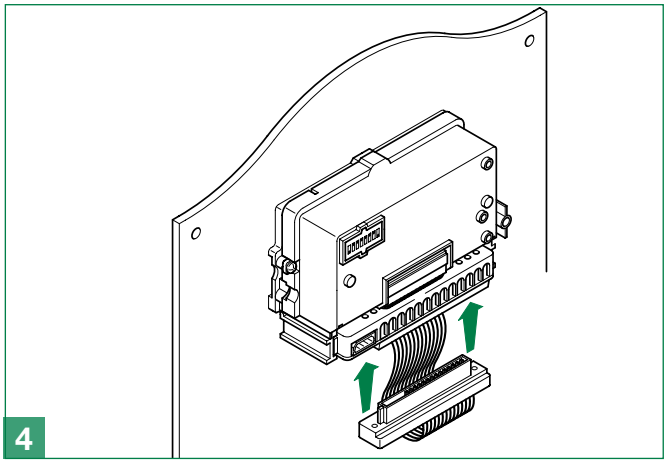

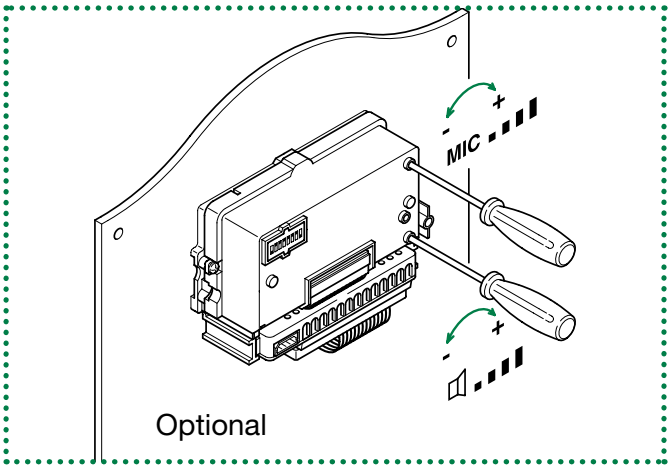

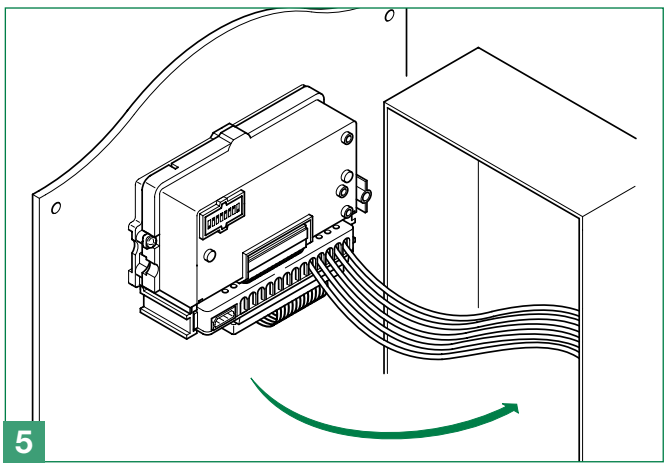

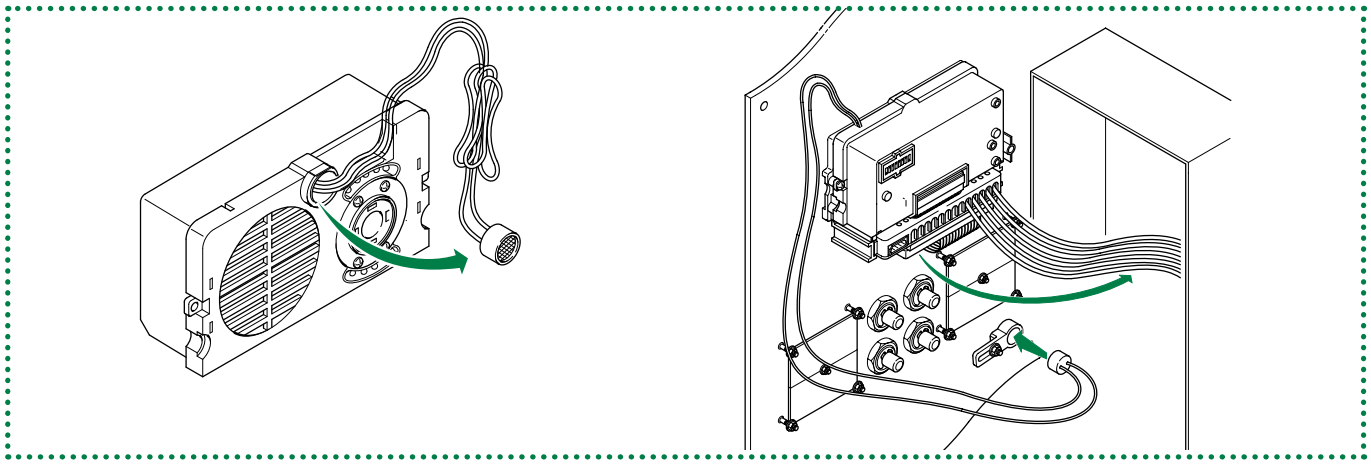

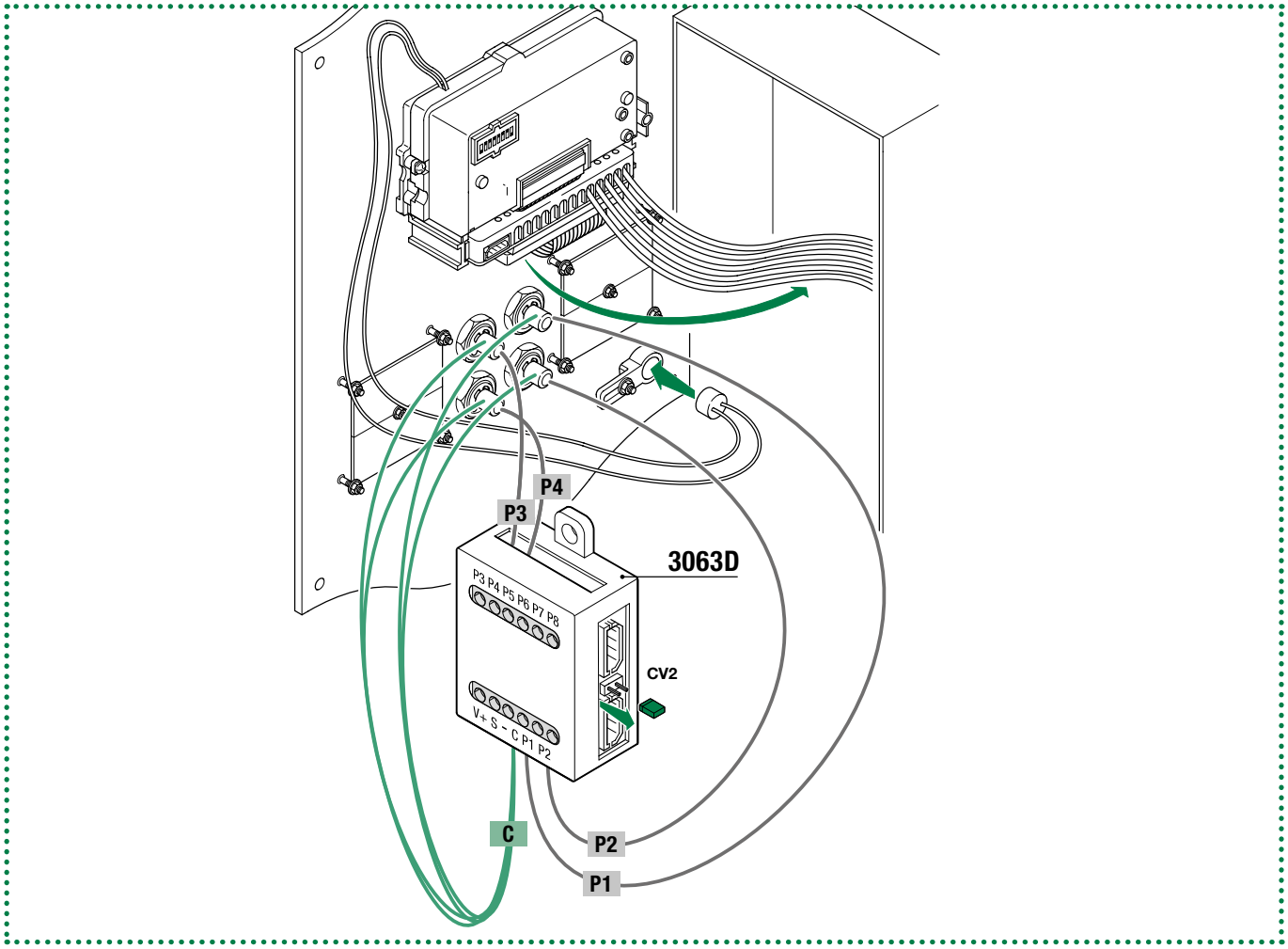

Inserting nameplates

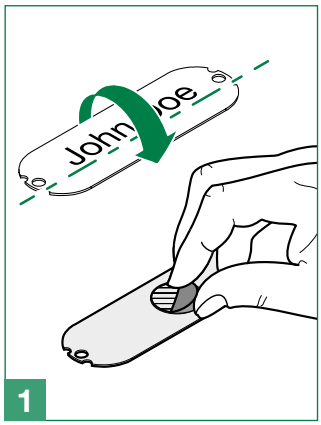

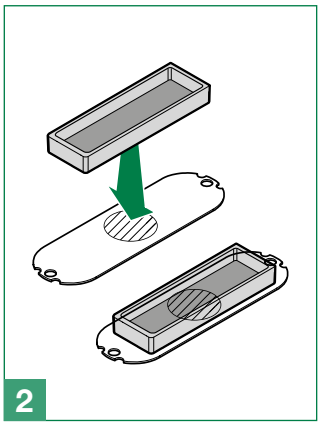

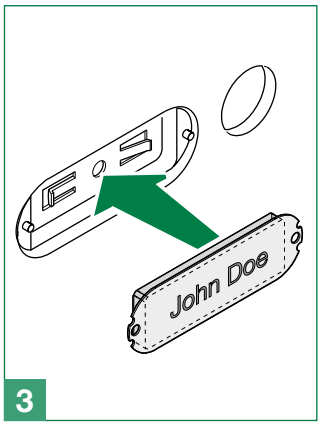

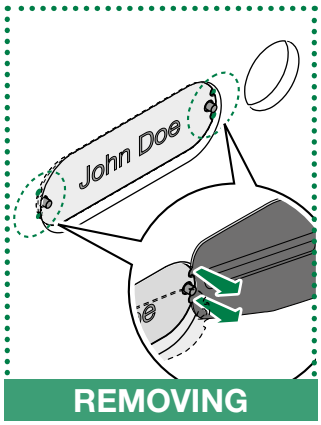

Insertion of name labels

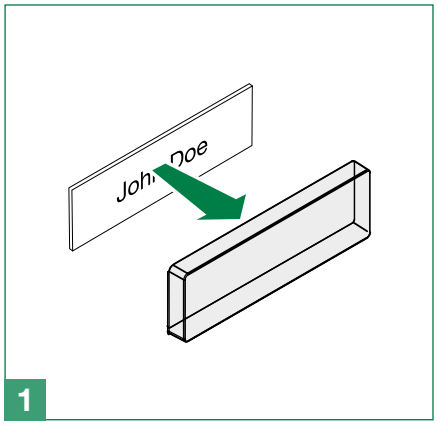

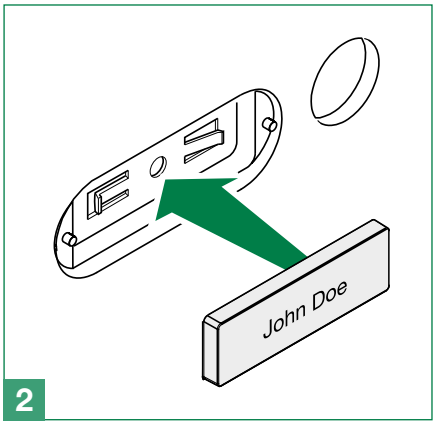

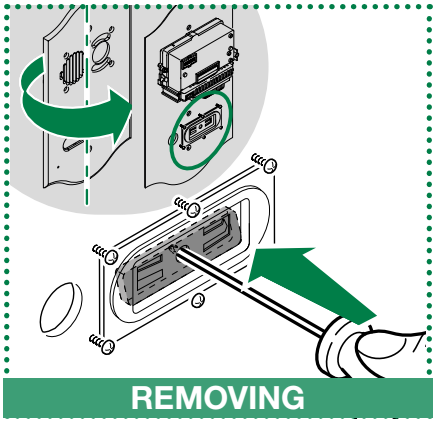

Correct position of the Art. 3063D

Art. 3063D

Lamp holder

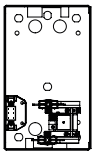

3001/RI
3201/RI

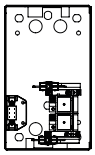

3002/RI
3202/RI

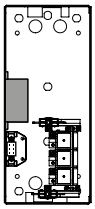

3003/RI
3203/RI

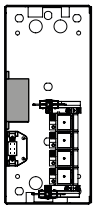

3004/RI
3204/RI

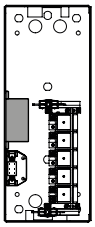

3005/RI
3205/RI

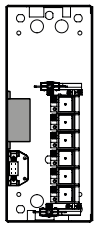

3006/RI
3206/RI

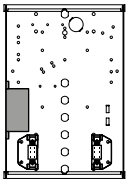

3006/2/RI
3206/2/RI

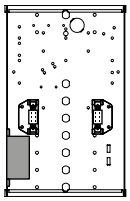

3008/2/RI
3208/2/RI

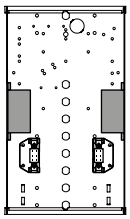

3010/2/RI
3210/2/RI

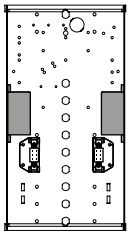

3012/2/RI
3212/2/RI

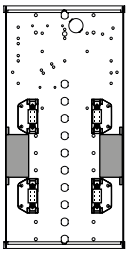

3014/2/RI
3214/2/RI

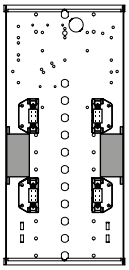

3016/2/RI
3216/2/RI

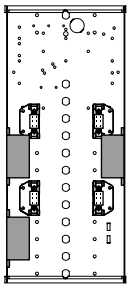

3018/2/RI
3218/2/RI

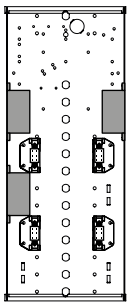

3020/2/RI
3220/2/RI

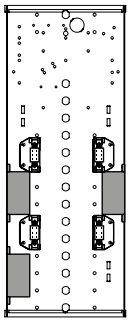

3022/2/RI
3222/2/RI

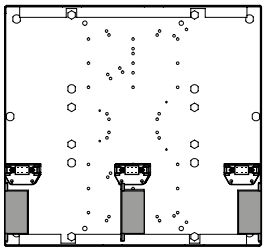

3024/4/RI
3224/4/RI

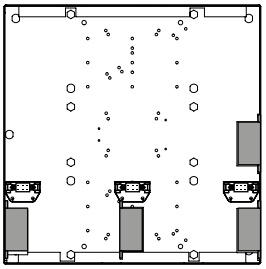

3028/4/RI
3228/4/RI

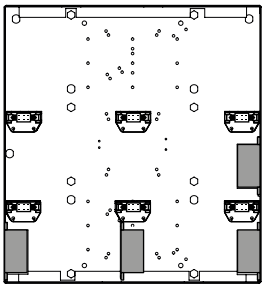

3032/4/RI
3232/4/RI

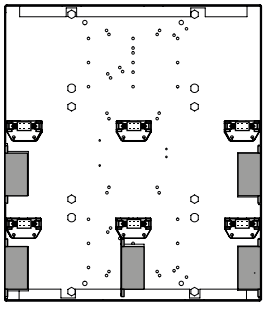

3036/4/RI
3236/4/RI

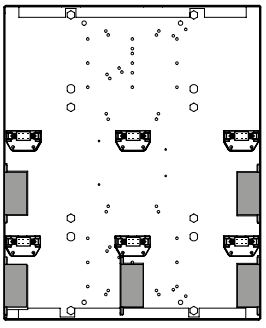

3040/4/RI
3240/4/RI

Installation in systems with 2 users

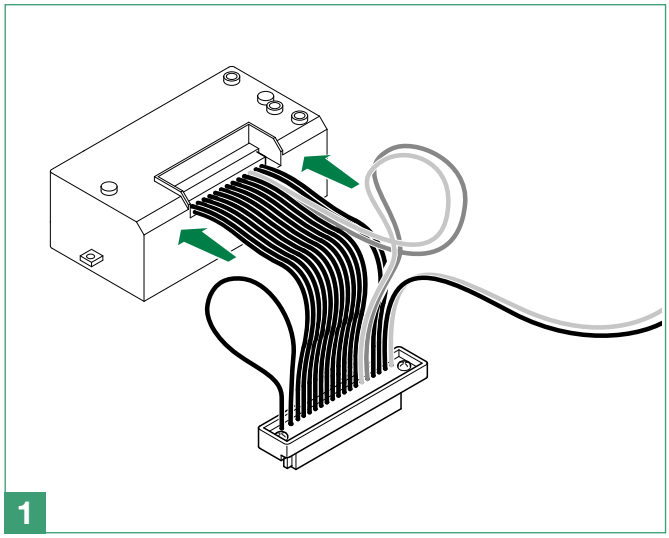

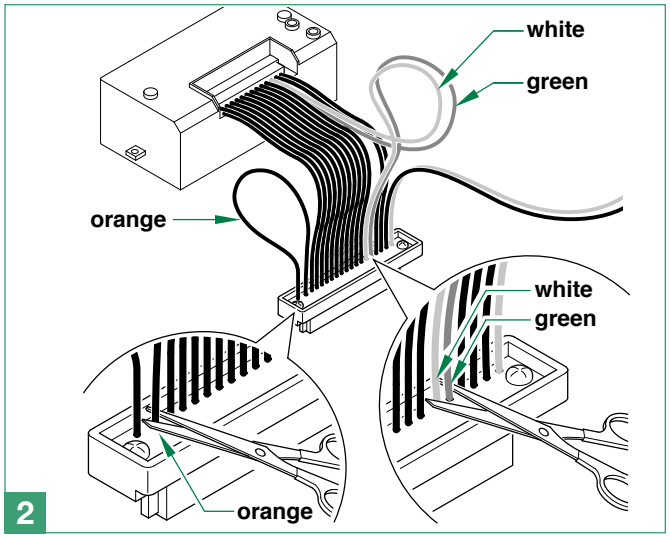

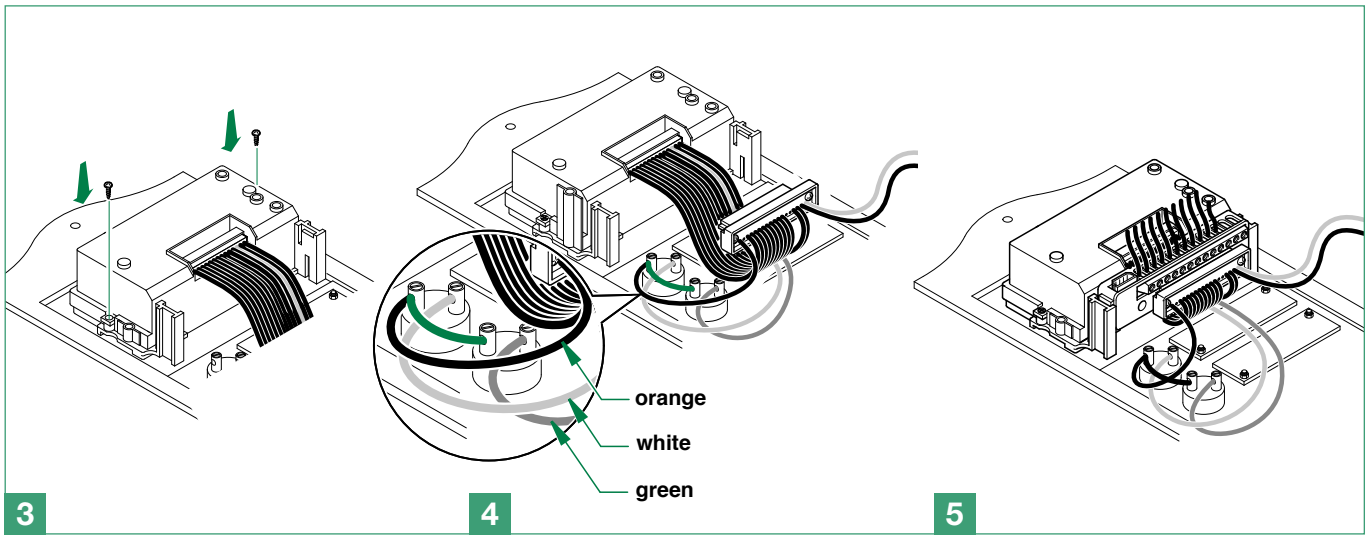

System performance and layouts

For further information of system performance and to view installation layouts, click on the system type that best meets your requirements:

- **Building Kit audio/video system** for the creation of audio-video systems for *small apartment blocks.*
- **SBTOP audio/video system** for the creation of audio-video systems for *residential complexes.*
- **SB2 audio system** for the creation of audio systems for *residential complexes.*
- **SB1 audio system** for the creation of audio systems for *residential complexes.*

Table of contents

Warning

Description 549
Art. CA2100P 549
Art. CA2200P 550

Technical features 551
Art. CA2100P 551
Art. CA2200P 551

Installing entrance panel Art. CA2100P 552

Changing nameplates 552

Installing entrance panel Art. CA2100P with button module Art. CA2200P 553

Connections 555
Variants 555

Call button addressing 556

Special programmes 558

Operating notes 559

System performance and layouts 559



Ciao Series Entrance panel Art. CA2100P-CA2200P

Description

Ciao Series modular entrance panel with die-cast aluminium front cover and nameplates with white LED backlighting. To be finished with 1/2/4/8 call buttons, available to purchase separately.

Featuring a Smart button programming mode. Supplied with a surface-mount installation support.

Entrance panel art. ***CA2100P*** *can be used alongside up to 4 button modules art.* ***CA2200P*** *(both horizontally and vertically) to reach a maximum of 72 call buttons.*

Art. CA2100P

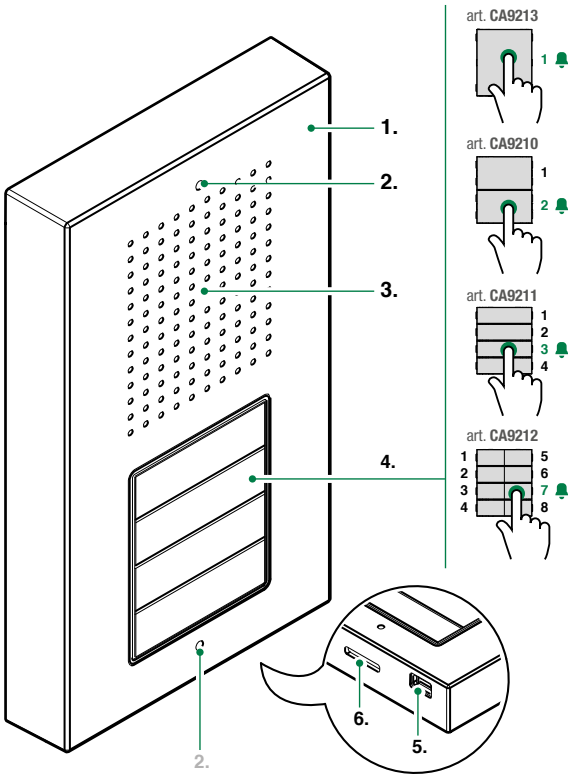

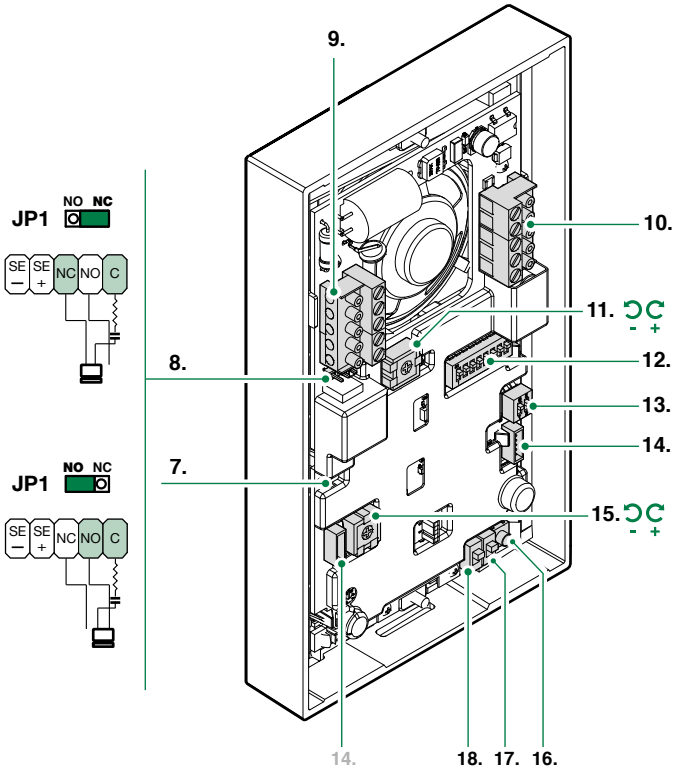

1. Die-cast aluminium cover
2. Faceplate fixing screw holes
3. Loudspeaker
4. Call buttons 1 / 2 / 4 / 8 users (available to purchase separately)
5. Microphone
6. Condensation drainage hole
7. **CV2** jumper to be removed when switching off the button lighting
8. **JP1** enabling the RC network for door lock filter on relay contacts
9. Terminal block for **J4** connection:
   SE- SE+ connection for electric door lock
   NC NO C relay contacts
10. Terminal block for **J3** connection
    L L bus line connection
    COM RTE and DO reference negative
    DO door open indication
    RTE request to exit button
11. **LED** button brightness control trimmer
12. **S2** dip switch for button addressing and special function programming
13. **S1** dip switch for button type configuration (1 / 2 / 4 / 8 users)
14. **J2** and **J5** 6-pole connectors for button module connection
15. **SPK** loudspeaker volume adjustment trimmer
16. **SW1** programming confirmation button
17. **PRC** call address programming input/output switch
18. **PRS** special programming input/output switch

Art. CA2200P

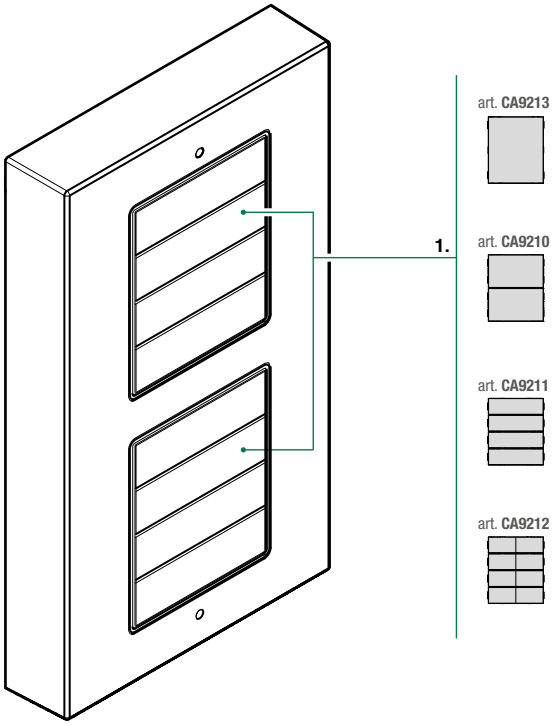

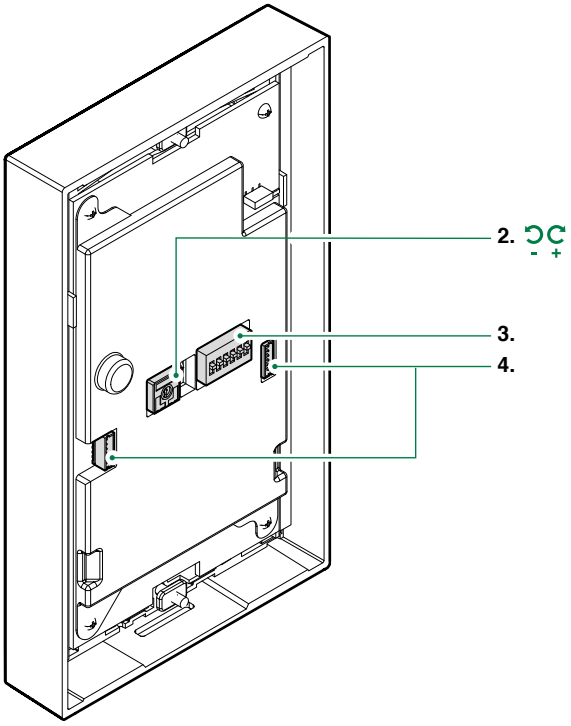

1. Call buttons 1 / 2 / 4 / 8 users (available to purchase separately)
2. **TM1** button brightness control/switch off trimmer
3. **S1** dip switch for button type configuration (1 / 2 / 4 / 8 users) and button module addressing
4. **J1** and **J2** 6-pole connectors for Art. CA2100P / CA2200P connection

Technical features

Art. CA2100P

MAIN FEATURES	
Type of power supply	BUS
Power supply voltage	27÷34 Vdc (BUS)
Min. absorption (W)	1.7W
Max. absorption (W)	7.6W
Terminals	L L COM DO RTE C NO NC SE+ SE-
Removable terminals	Yes
Microphone	electret
Loudspeaker	8ohm 0.2W
Loudspeaker volume control	Yes
Brightness control	Yes
IP rating	IP 54
IK rating	IK 08
Operating temperature	-25 °C ÷ +55 °C
Operating relative humidity	25 ÷ 75%
Width	100 mm
Height	172 mm
Depth	28 mm

COMPATIBILITY	
SB2 Audio System	Yes

Art. CA2200P

MAIN FEATURES	
Type of power supply	BUS
Power supply voltage	27÷34 Vdc (BUS)
Min. absorption (W)	0.62W
Max. absorption (W)	0.62W
Brightness control	Yes
IP rating	IP 54
IK rating	IK 08
Operating temperature	-25 °C ÷ +55 °C
Operating relative humidity	25 ÷ 75%
Width	100 mm
Height	172 mm
Depth	28 mm

Installing entrance panel Art. CA2100P

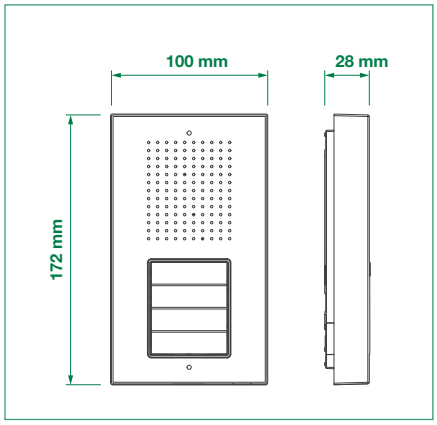

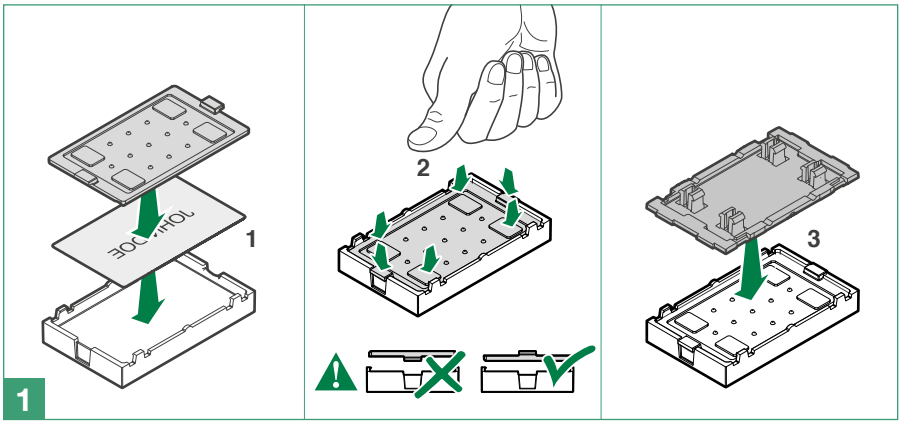

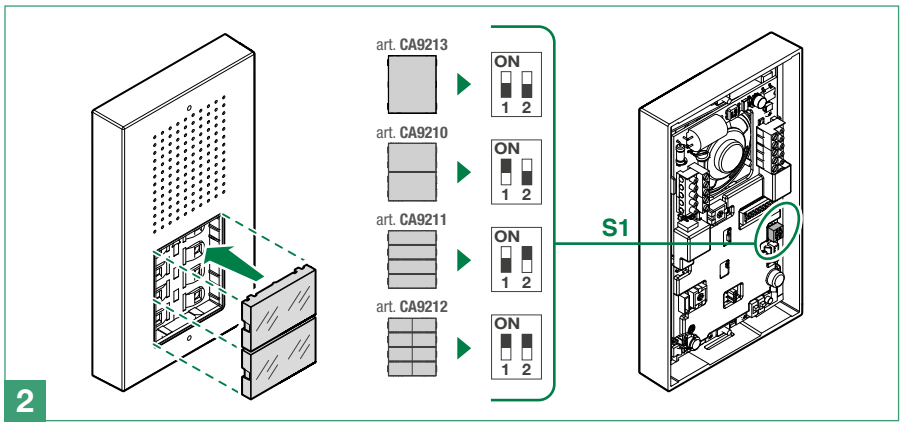

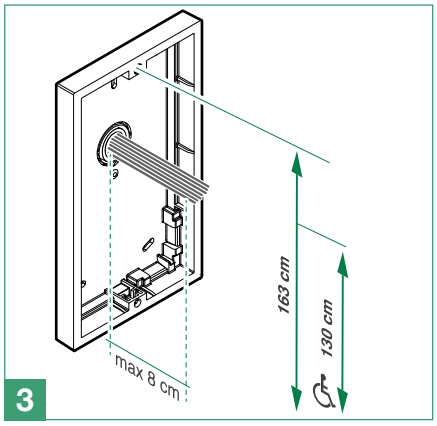

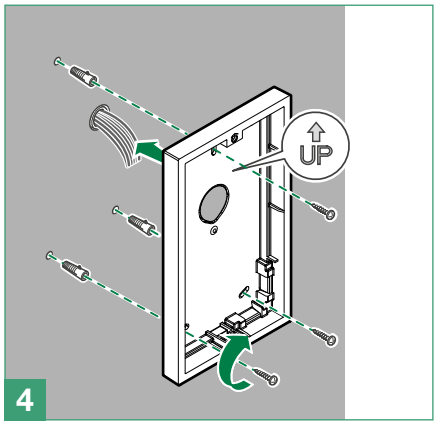

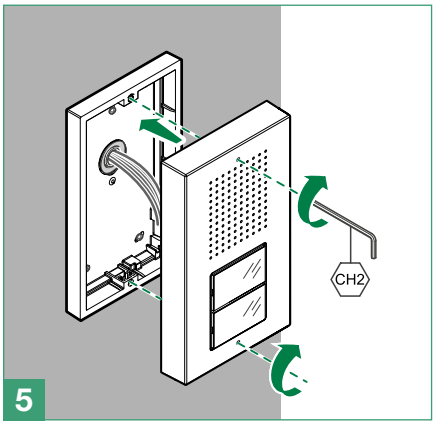

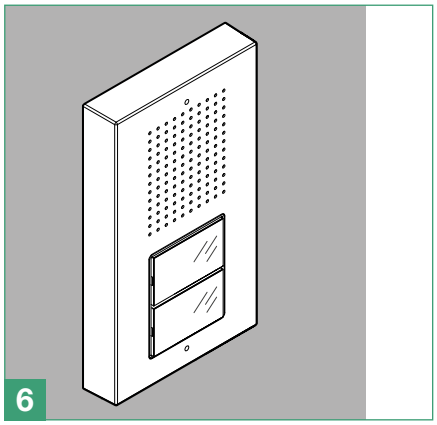

Changing nameplates

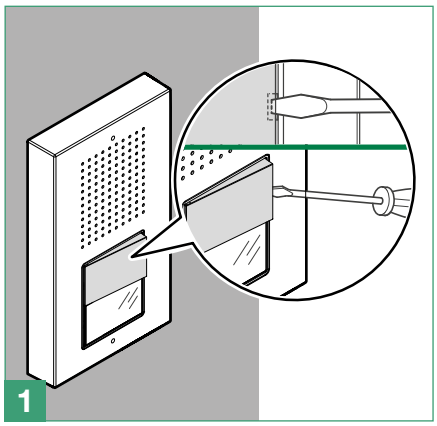

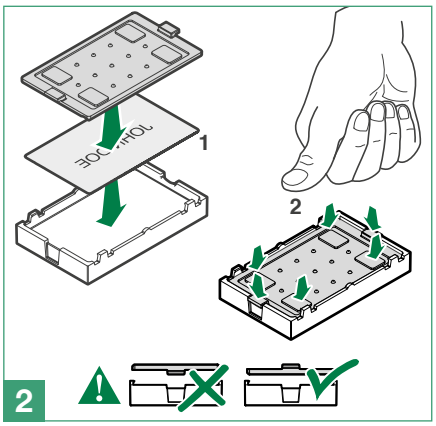

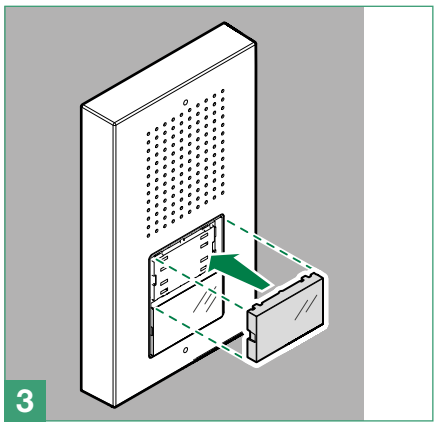

Installing entrance panel Art. CA2100P with button module Art. CA2200P

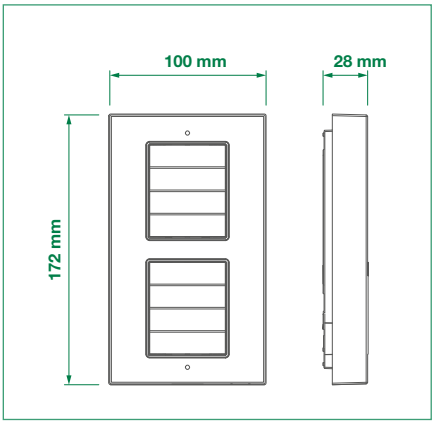

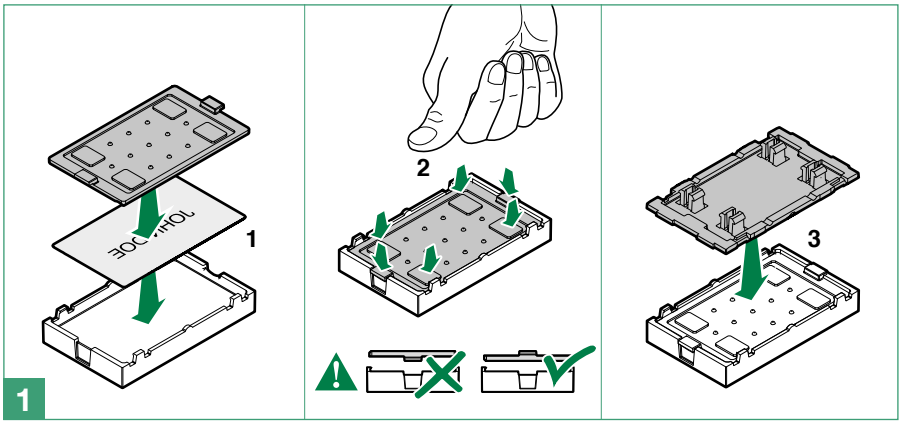

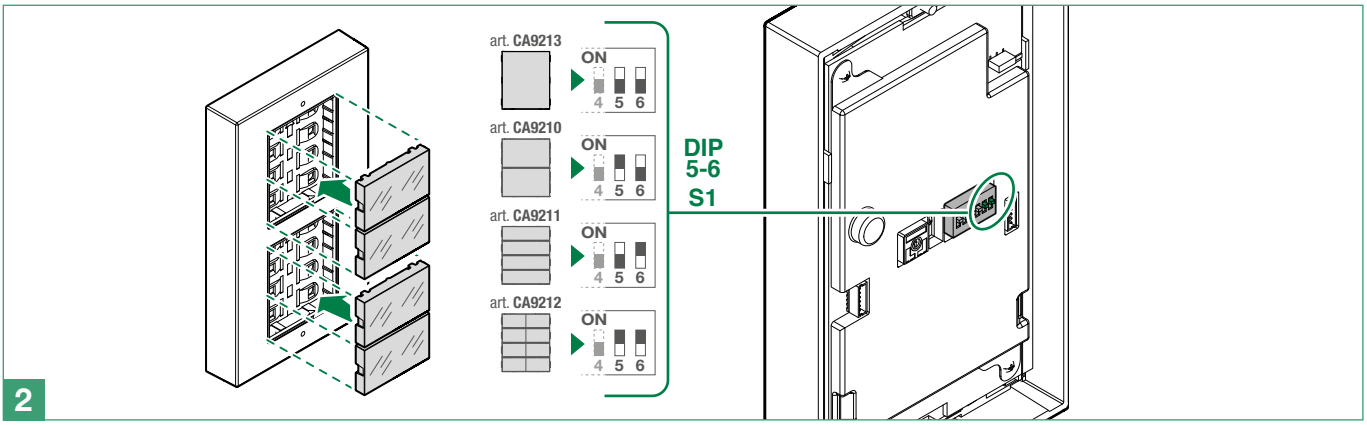

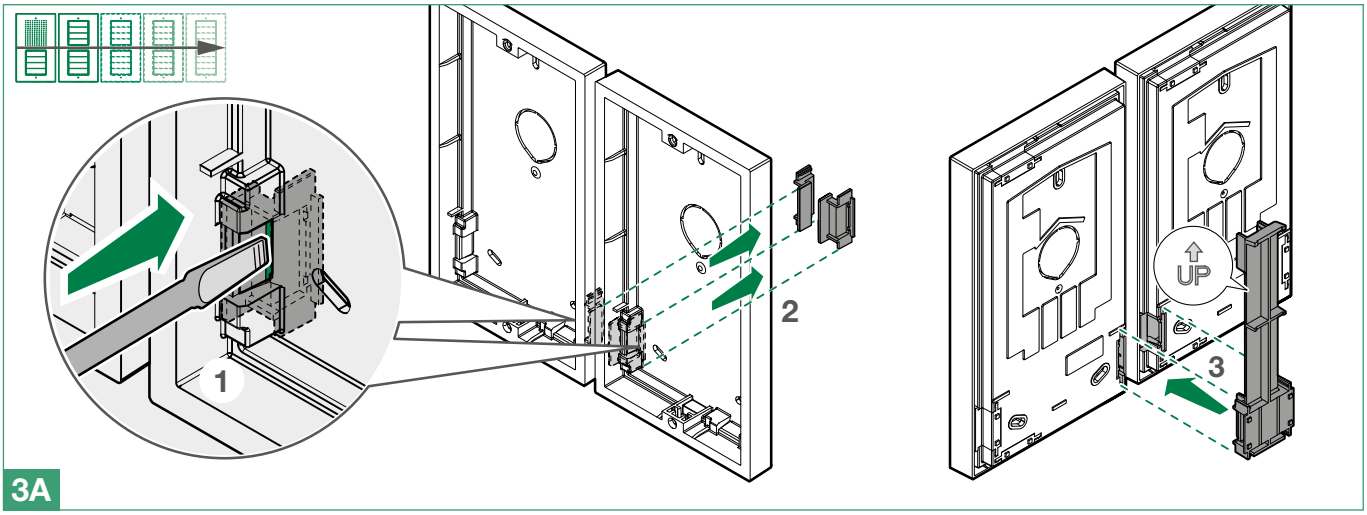

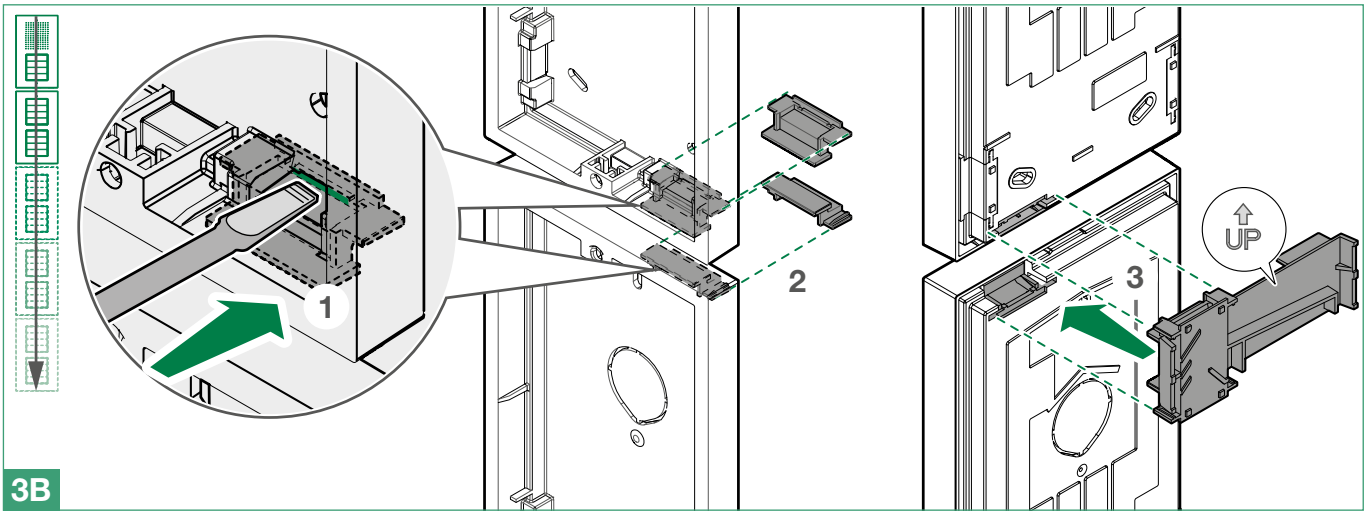

The addressing of button modules allows, if a module Art. CA2200P is replaced, just the address of the replaced module Art. CA2200P to be programmed, without having to reprogram all the buttons.

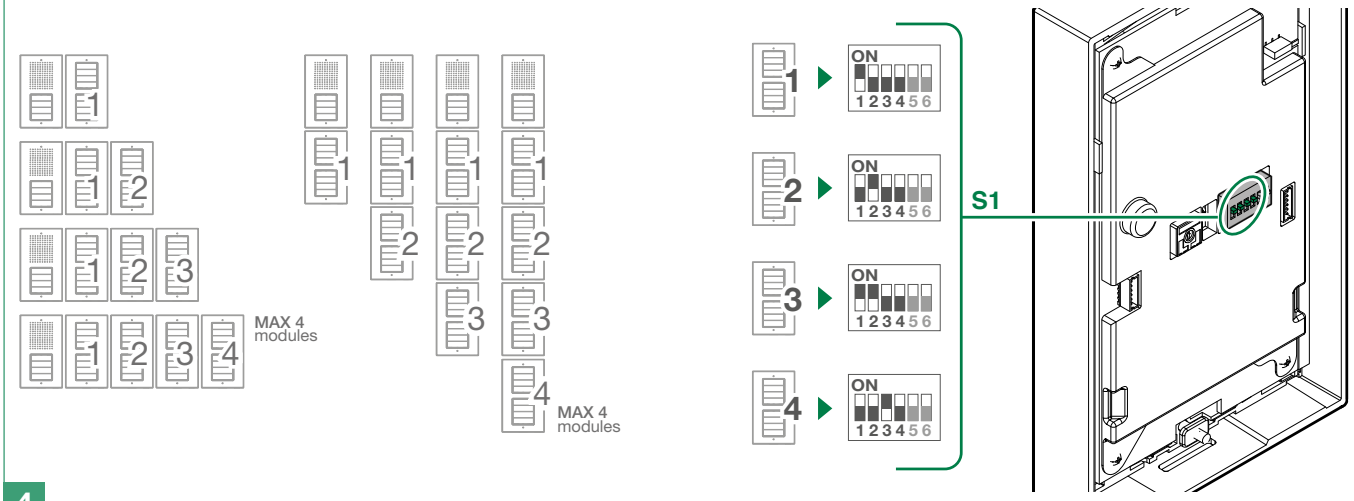

4

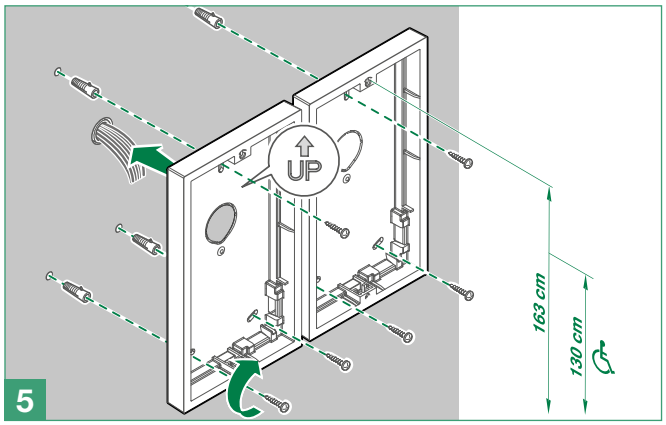

5

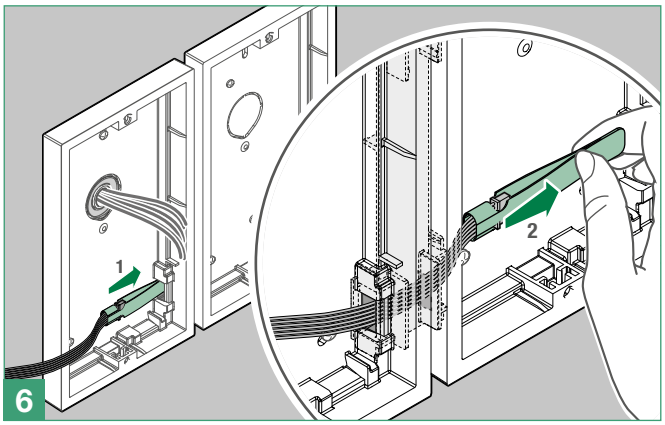

6

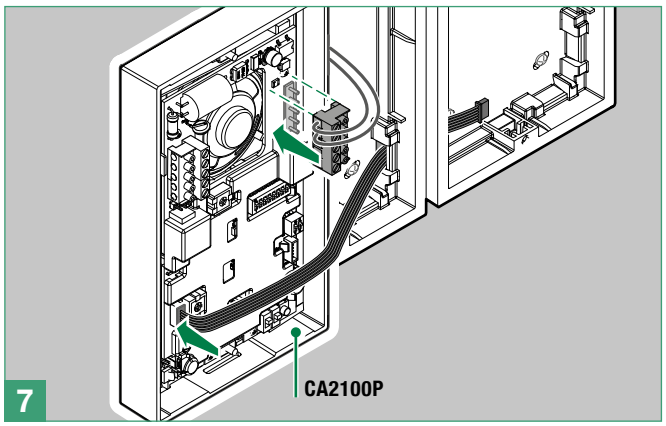

7

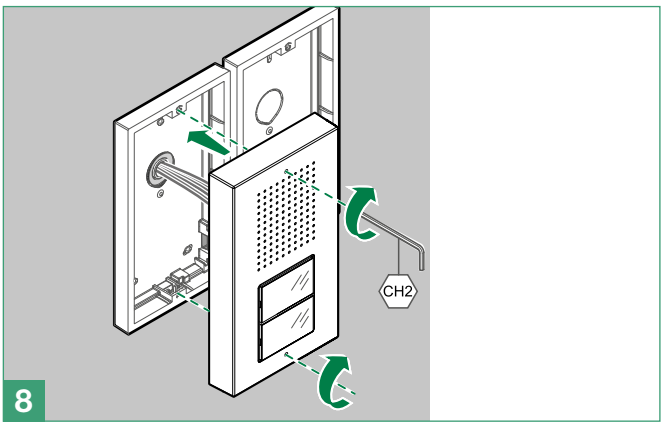

8

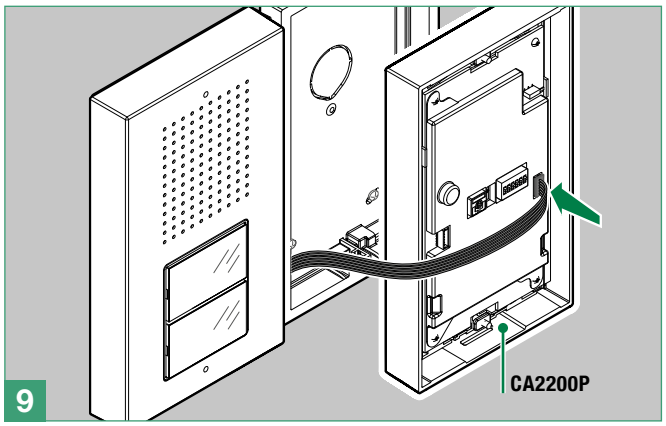

9

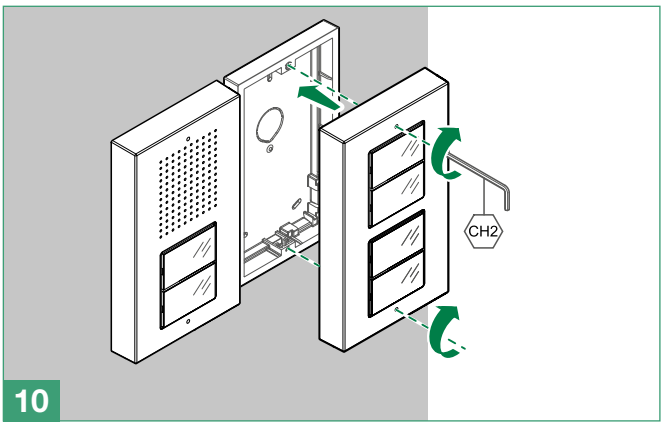

10

Connections

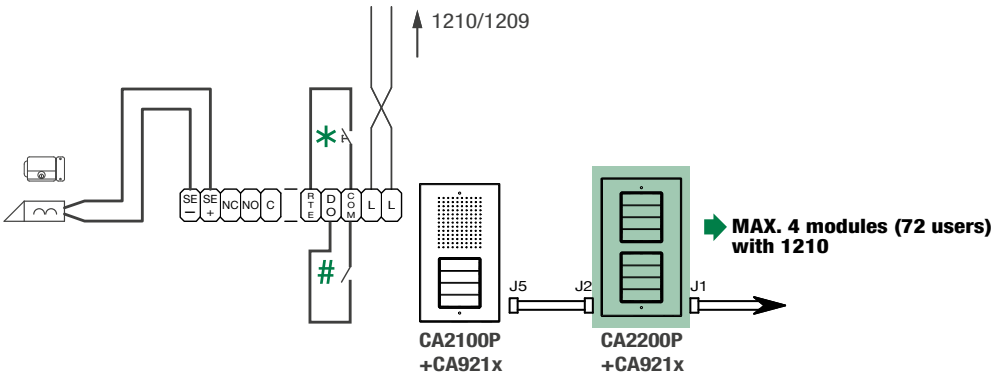

* **20 m Max.** Local lock-release button.

\# **20 m Max.** Active input closed for DOOR OPEN signal

Variants

Variant for using the external unit relay

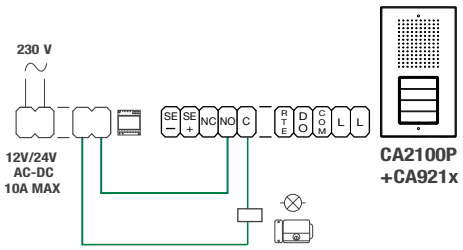

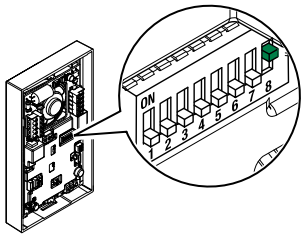

"C.NC.NO relay activation on actuator command: 2 sec"
Set the dip switches permanently as shown in the figure

Variant for using a safety lock

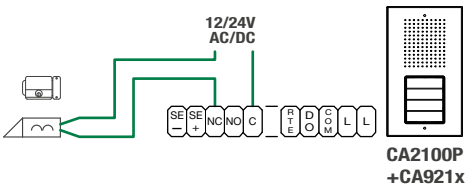

JP1 enabling the RC network for door lock filter on relay contacts

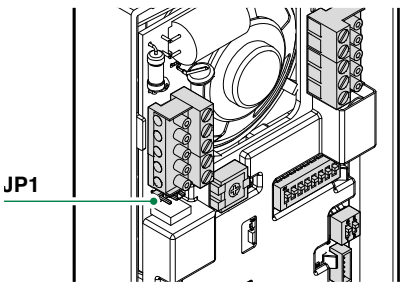

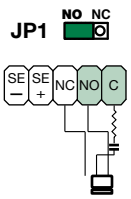

On C. NO. contacts

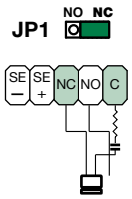

On C. NC. contacts

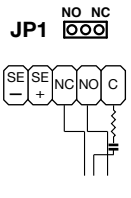

Excluded: voltage-free contact

Call button addressing

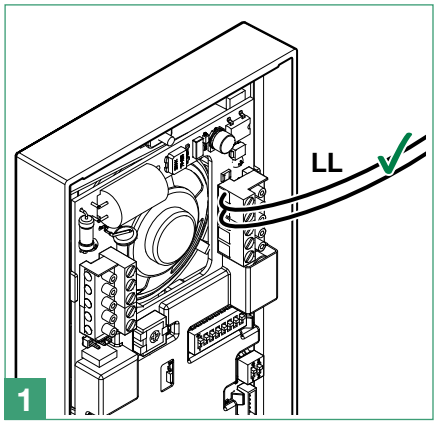

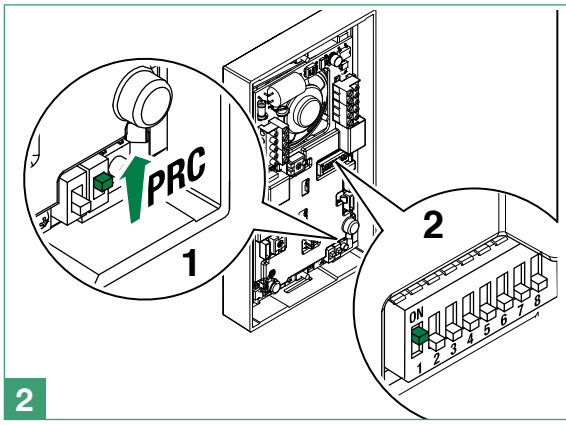

Set the address of the apartment you want to call using the dip switches (see **"addressing table"**).

Example: code 1

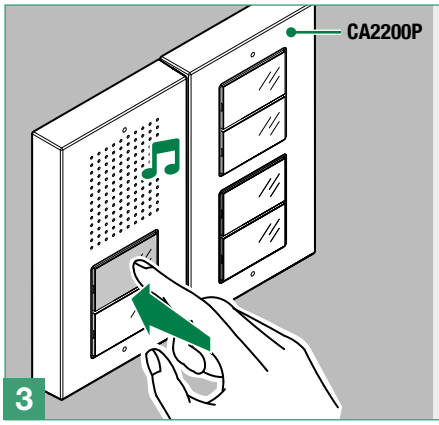

Code	Dip switch ON
1	1

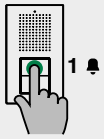

Press the button you want to associate with the call address set using the dip switches

Press the following buttons to assign incremental addresses #

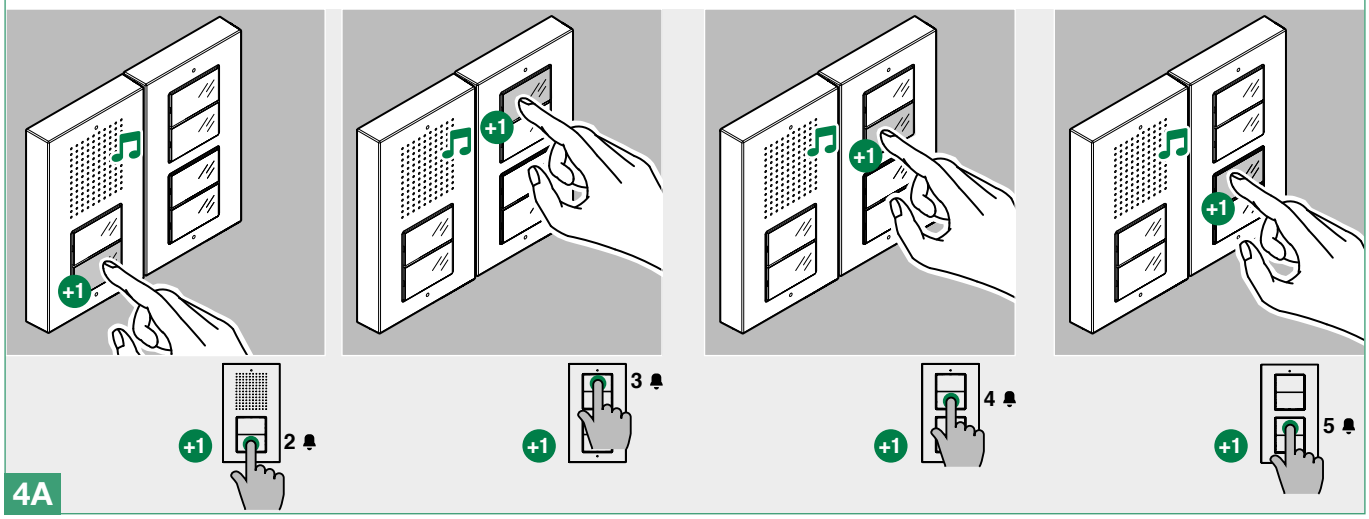

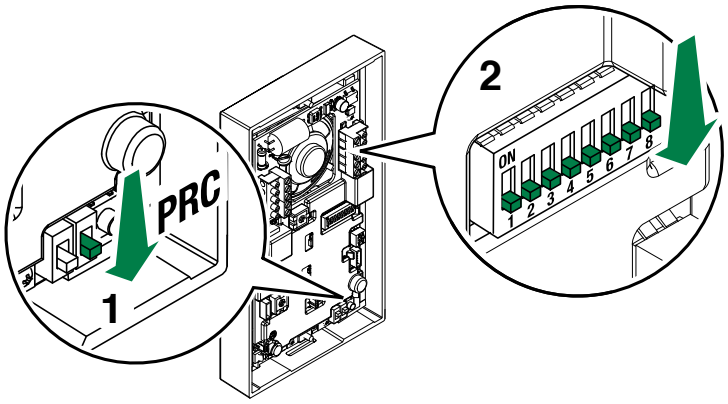

#

If you need to set a NON-progressive address, set the code using the dip switches and press the button you want to associate with the address.

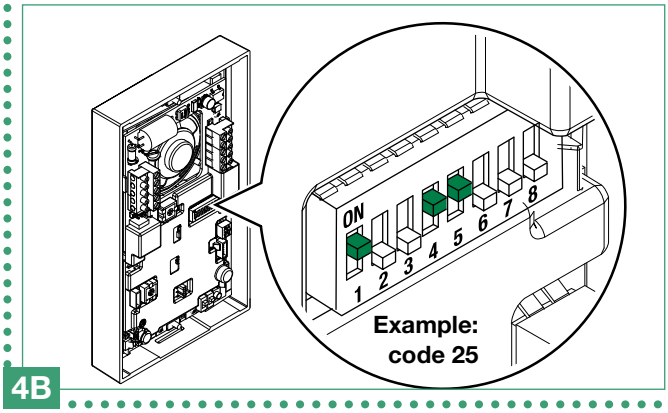

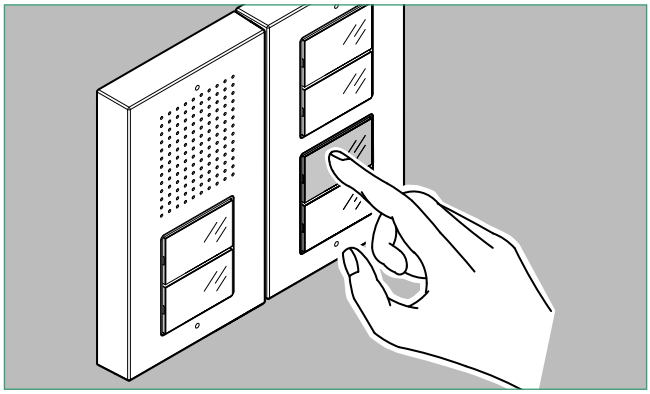

4B

Special programmes

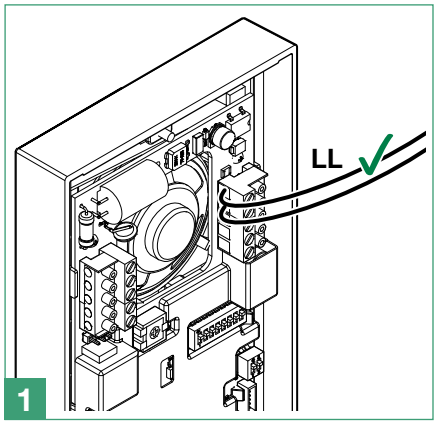

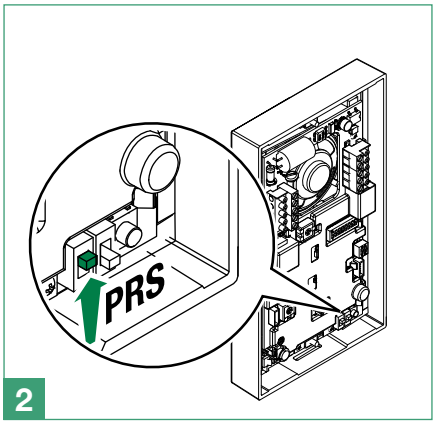

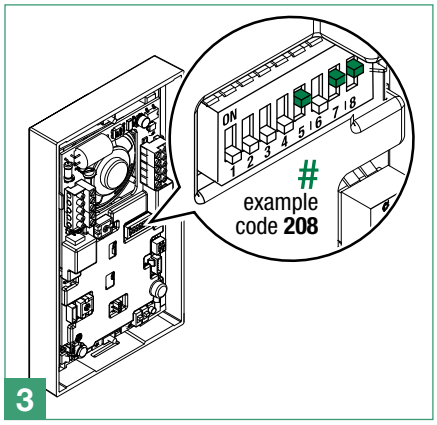

 # Set the dip switches for the function you wish to program, see the table.

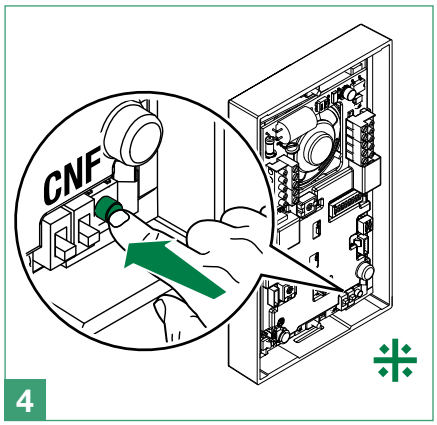

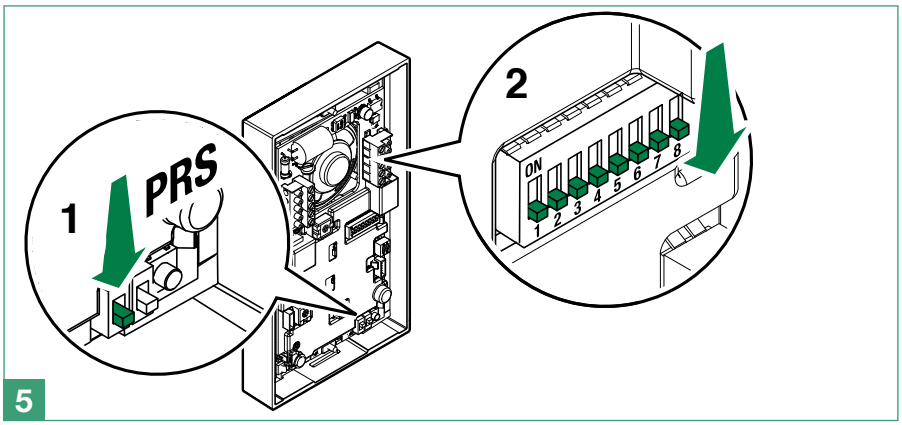

⁜ Repeat steps 3 and 4 to program other special functions

CODE	DIP SWITCHES ON	FUNCTIONS
		Audio messages
195	1,2,7,8	Hebrew
196	3,7,8	Polish
197	1,3,7,8	Catalan
198	2,3,7,8	Galician
199	1,2,3,7,8	Basque
206	2,3,4,7,8	Danish
207	1,2,3,4,7,8	Norwegian
211	1,2,5,7,8	Swedish
215	1,2,3,5,7,8	Italian
216	4,5,7,8	French
217	1,4,5,7,8	Spanish
218	2,4,5,7,8	Dutch
219	1,2,4,5,7,8	Greek
220	3,4,5,7,8	English
221	1,3,4,5,7,8	German
222	2,3,4,5,7,8	Portuguese
202	2,4,7,8	Enables voice message (door opened warning) when the RTE contact is closed
203	1,2,4,7,8	Disables voice message (door opened warning) when the RTE contact is closed (default setting)
214	2,3,5,7,8	OFF (default)
		Actuator command management **N.B. Art. 1256 in generic actuator mode must not be present in the system.**
229	1,3,6,7,8	C.NC.NO relay activation on actuator command: 2 sec
230	2,3,6,7,8	C.NC.NO relay activation on actuator command: 4 sec

231	1,2,3,6,7,8	C.NC.NO relay activation on actuator command: 8 sec
		Door lock
245	1,3,5,6,7,8	Door lock time: 2 sec + disabling tone (default)
246	2,3,5,6,7,8	Door lock time: 4 sec
247	1,2,3,5,6,7,8	Door lock time: 8 sec
248	4,5,6,7,8	Door lock confirmation tone: enabled
251	1,2,4,5,6,7,8	Relay C.NC.NO in parallel to SE (default)
252	3,4,5,6,7,8	Lock-release always enabled (default)
253	1,3,4,5,6,7,8	Lock-release only enabled for user called
		System functions
232	4,6,7,8	Awaiting response time: 60 sec (default)
233	1,4,6,7,8	Awaiting response time: 120 sec
234	2,4,6,7,8	Awaiting response time: 30 sec
235	1,2,4,6,7,8	Talk time: 90 sec. (default)
236	3,4,6,7,8	Talk time: 180 sec
239	1,2,3,4,6,7,8	Confirmation tone on user call = enabled (default)
240	5,6,7,8	Confirmation tone on user call = disabled
243	1,2,5,6,7,8	Awaiting reset time: 10 sec (default)
244	3,5,6,7,8	Awaiting reset time: 1 sec
208	5,7,8	Reset after lock-release in audio: enabled (default)
209	1,5,7,8	Disables “awaiting reset time” on lock-release command (awaiting response time or talk time will be activated).
249	1,4,5,6,7,8	Call transmission: single (default)
250	2,4,5,6,7,8	Call transmission: triple
		System mode
0		Simplebus (default)
254	2,3,4,5,6,7,8	**Restore default**

Operating notes

- When a call is transmitted from the external unit, if a busy tone is heard instead of the ringtone, this means communication with another external unit is in progress.

System performance and layouts

For further information of system performance and to view installation layouts, click on the system type that best meets your requirements:

- **Audio kit** for the creation of audio-video systems for *individual residences*.
- **SB2 audio system** for the creation of audio systems for *residential complexes.*

Table of contents

Warning

Description 561

Technical features 562

Installation 563

Changing nameplates 564

Settings 565

Programming 566

Call address programming for 2/4 users and additional external unit 566

Operation with additional external units 567

Operation with switching device 1404 (default) 567

Operation with switching device 1405 567

Programming a generic call address 568

Disabling the COM-RTE contact 569

Connections 570

Door open indication use variant 570

Variant for using a safety door lock and additional power supply 570

Using the RC network for door lock filter on relay contacts 570

System performance and layouts 570



Quadra audio/video entrance panel Art. 4893M

Description

Wall-mounted external unit for Quadra series door entry monitor. Die-cast aluminium front panel, wide-angle colour video camera and single LED for lighting at night. Mechanical buttons with the option of setting 1 to 4 call buttons via DIP-switch. Indicator LED for call sent, lock-release activated, audio activated and system busy. Loudspeaker volume adjustment and audio balancing. Bus line power supply.

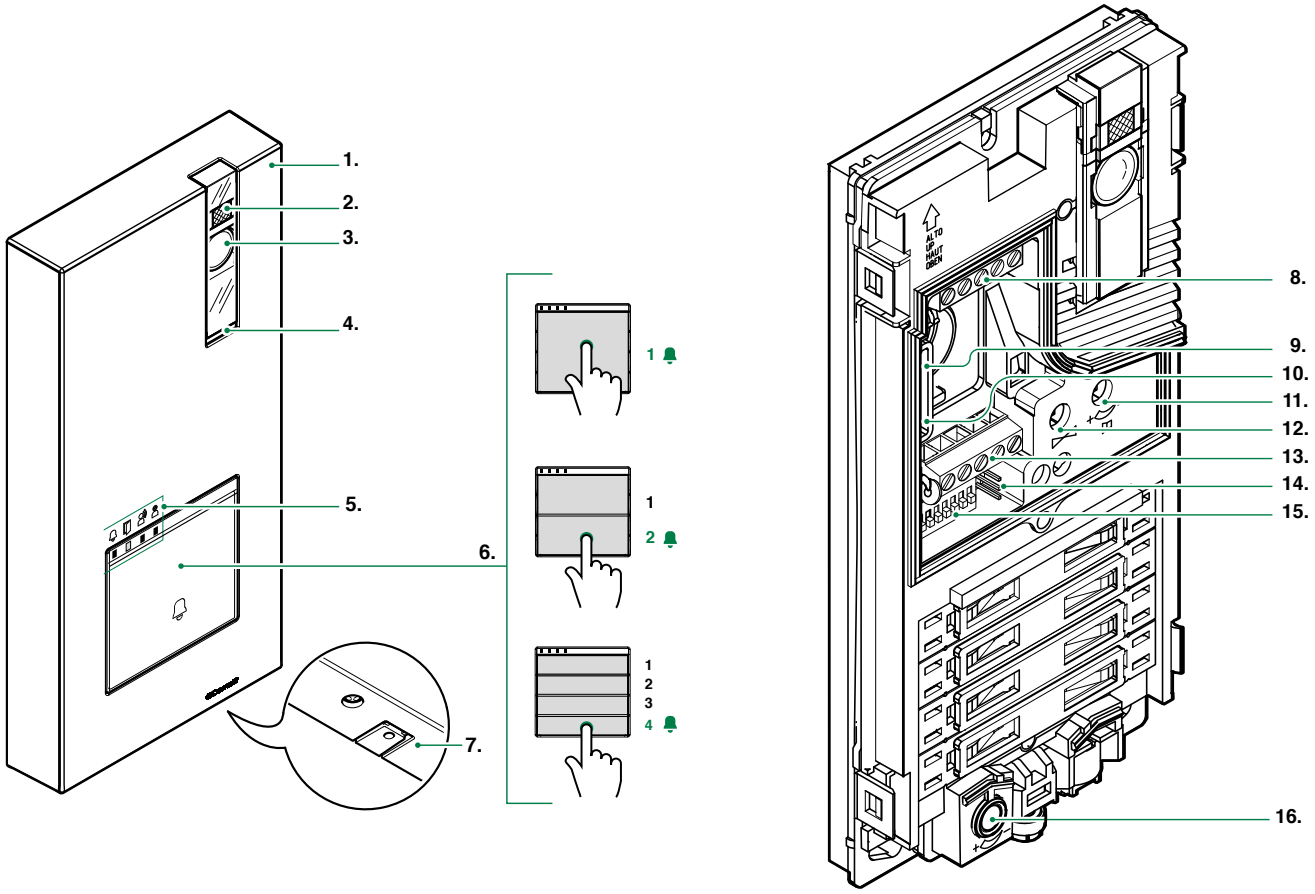

1. Die-cast aluminium cover

2. Camera lighting LED set by default to activate in response to a call (can be disabled by setting DIP 7 to ON, see **Settings**)

3. Wide-angle colour camera

4. Loudspeaker

5. Indicator LED

call sent / lock-release activated

audio active / system busy

6. Call button 1 / 2 / 4 users

7. Microphone

8. Terminal block **M1**

LL bus line connection

RTE request to exit button input

COM common input for RTE and DO contacts

DO door open indication input

9. PR programming input/output switch

10. CNF programming confirmation switch

11. Loudspeaker volume control

12. Audio balance

13. Terminal block **M2**

SE- SE+ connection for electric door lock

NC relay normally closed contact

NO relay normally open contact

C relay common contact

14. JP1 enabling the RC network for door lock filter on relay contacts

15. DIP-SWITCH for function programming

16. Microphone volume control

Technical features

MAIN FEATURES	
Type	Monoblock entrance panel
Type of finish	Die-cast aluminium
Audio/video system	Yes
Wall-mounted	Yes
Camera	Colors
Lens size (mm)	2,1
Diagonal viewing angle (°)	100
Minimum colour illumination (lux)	1
Power supply	Bus
Maximum current absorption (mA)	250
Clamps	LL RTE COM DO SE- SE+C NC NO
Buttons to call	Yes
Total buttons	4
Microphone volume control	Yes
Loudspeaker volume control	Yes
Operating temperature (°C)	-25 ÷ +55
IP protection rating	IP54
Vandal Resistant rating (IK code)	IK08

HARDWARE SPECIFICATIONS	
Visual signalling	Yes
Acoustic signalling	Yes

GENERAL DATA	
Product height (mm)	195
Product width (mm)	95
Product depth (mm)	28

COMPATIBILITY	
Kit audio/video system	Yes

ELECTRICAL SPECIFICATIONS	
Door release (dry contact bridge)	Yes

Installation

The camera must not be installed in front of light sources, or in places where the filmed subject is against the light. In dim environments, we recommend additional lighting is provided.

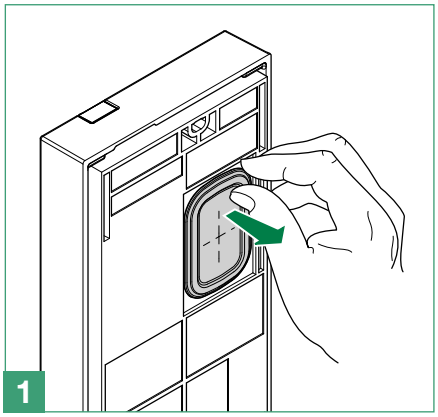

1

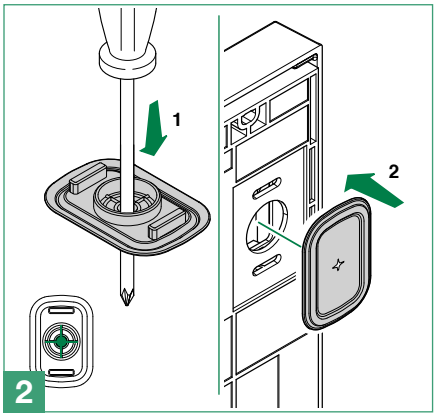

2

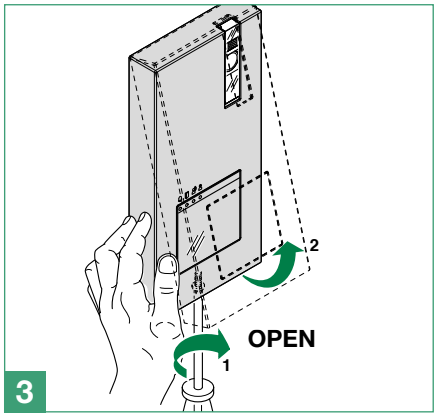

3

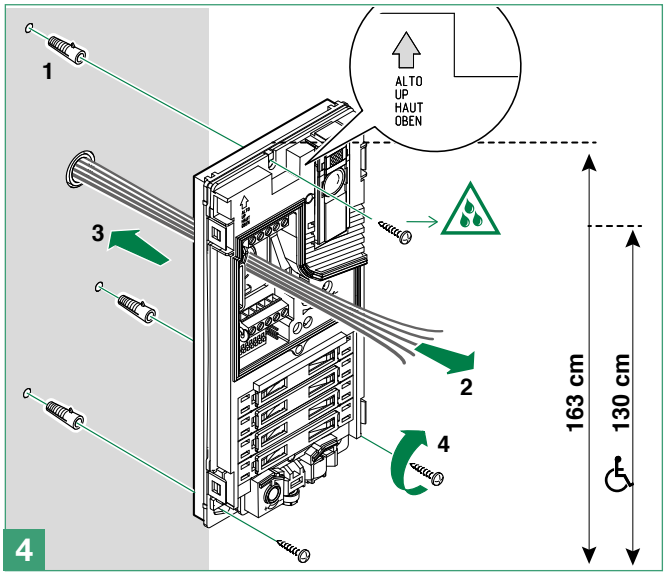

4

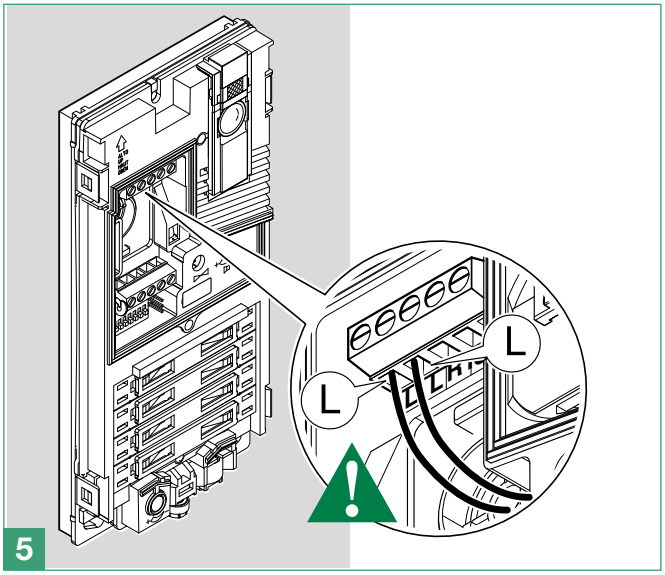

5

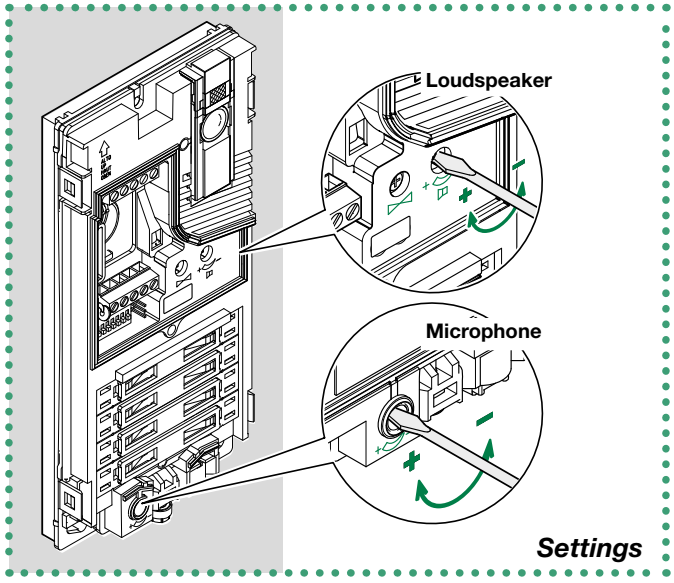

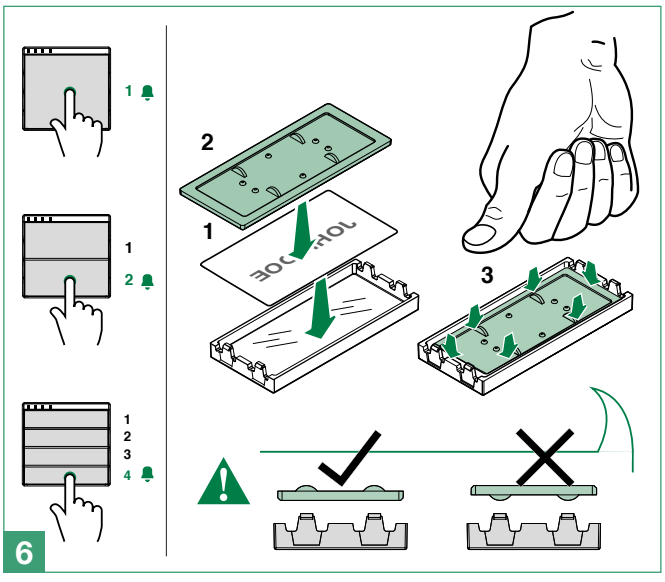

6

You can download the free software (art. 1235A) to print the entrance panel name cards, using the adhesive pre-cut sheets available in our catalogue (art. 1217A).

- *Before securing the screw, make sure that you do not need to program the external unit and make sure that the metal front panel does not rub against other metal parts, with consequent risk of damage to its insulating coating.*
- *While the system is running, take care not to accidentally call users when replacing the nameplate labels.*

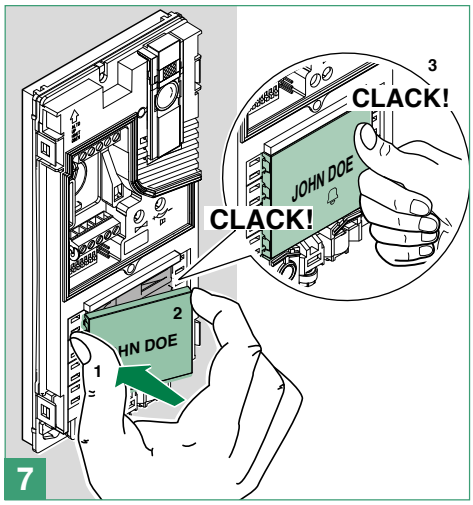

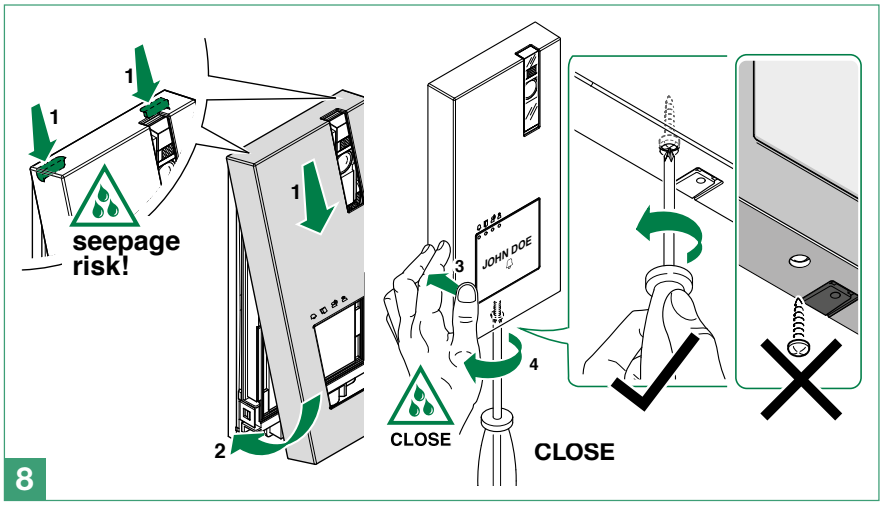

To ensure that the product remains water-tight, make sure that the fixing procedure is carried out correctly.

Changing nameplates

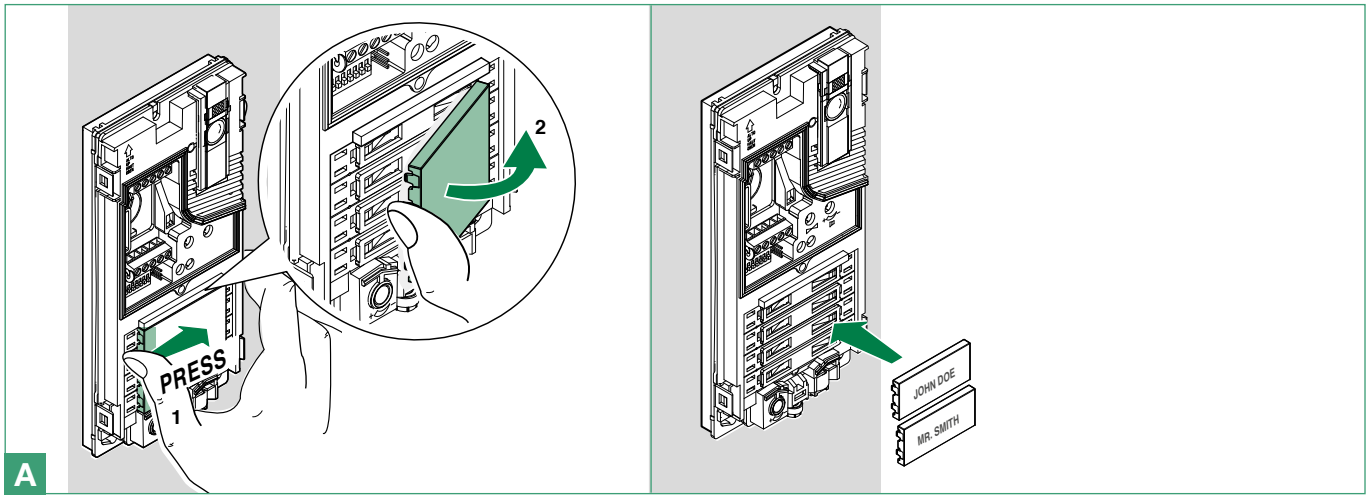

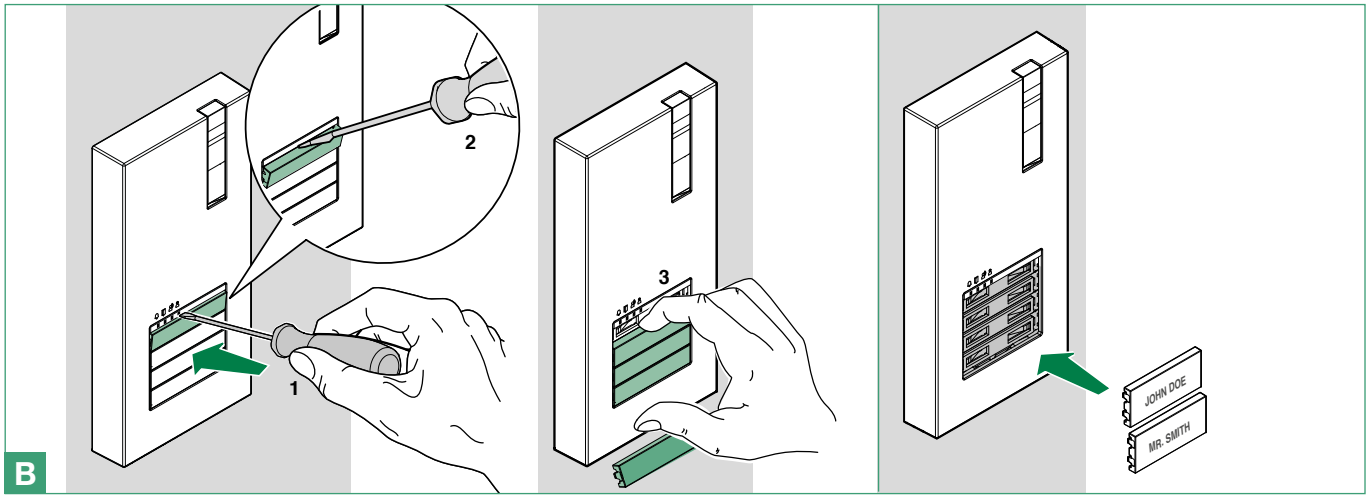

Settings

Set the DIP-switches of S1 corresponding to the function that you want to programme as shown in the table below.

DIP-SWITCH		FUNCTION
DIP 1	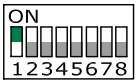	The lock-release relay and the second relay are controlled by 2 separate buttons (e.g. lock-release button and actuator button)
	 *	The lock-release relay and the second relay are controlled by a single button (e.g. lock-release button)
DIP 2	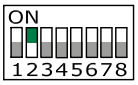	lock-release activation time: 8 sec
	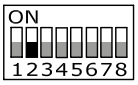 *	lock-release activation time: 2 sec
DIP 3	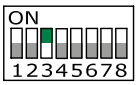	relay activation time: 8 sec
	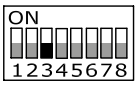 *	relay activation time: 2 sec
DIP 4	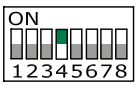	reset wait time: 1 sec
	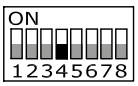 *	reset wait time: 10 sec
DIP 5	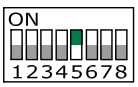	Call transmission: triple
	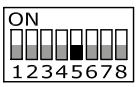 *	Call transmission: single
DIP 6		confirmation tones (call, lock-release, relay, audio enabled): disabled
	 *	confirmation tones (call, lock-release, relay, audio enabled): enabled
DIP 7	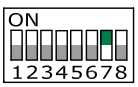	Camera lighting LED: disabled
	 *	Camera lighting LED: enabled
DIP 8		LED lighting of name-holder front panels: OFF
	 *	LED lighting of name-holder front panels: ON

* default

Programming

Call address programming for 2/4 users and additional external unit

Take note of the DIP-switch settings. Enter programming mode.

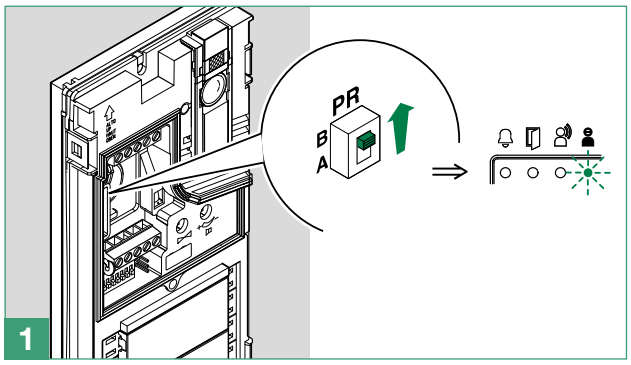

On the DIP-switch, set the code corresponding to the function you want to program as shown in the table.

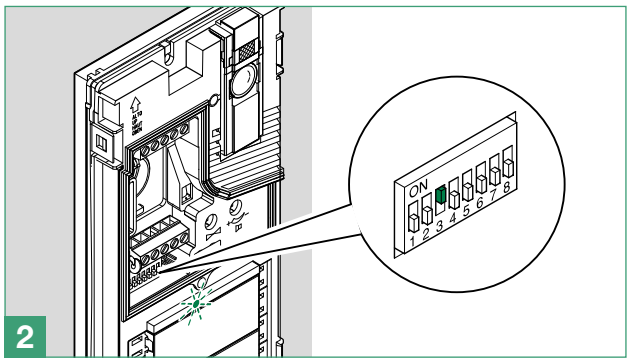

CODE	DIP-SWITCH ON	FUNCTION
1	1	Button 1 enabled with call address 1 (default)
2	2	Buttons 1-2 enabled with call addresses 1-2
4	3	Buttons 1-2-3-4 enabled with call addresses 1-2-3-4
8	4	Single external unit Quadra, or additional external unit connected with digital switching device art. 1404 (default condition)
16	5	Secondary Quadra with digital switching device art. 1405
32	6	Main Quadra with digital switching device art. 1405
254	2,3,4,5,6,7,8	Restore default

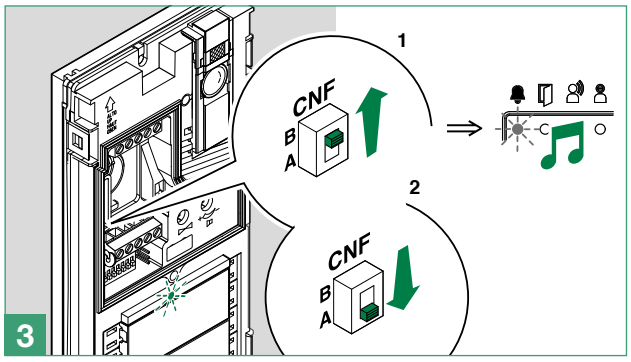

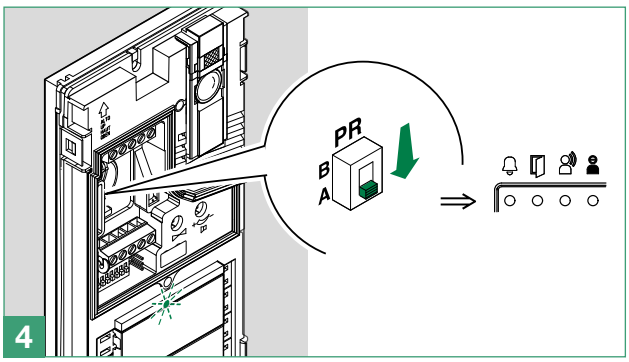

Reset the configuration of the DIP-switches

Operation with additional external units

- **External unit with switching device art. 1404**: default programming to be used with *single external unit* or with multiple external units connected with switching device art. 1404.
- **Secondary external unit**: function to be used in systems with switching device art. 1405 and 2 external units.
- **Main external unit**: function to be used in systems with switching device art. 1405 and 2 external units.

Operation with switching device 1404 (default)

With the switching device 1404 it is possible to install 2 or more external unit.

In the configuration of art. 1404, the MIN and MAX DIP-switches define respectively the lowest and highest user codes which can be connected to the riser. For information on setting the desired values, refer to the **"addressing table"**.

Separate switching devices for different risers must manage code ranges which are not overlapping.

The ***self-ignition*** command will activate the camera of the external unit. Further ***self-ignition*** commands will toggle between 2 (max) external units, activating them alternately.

For the diagrams, please refer to the **Audio/video kit** section in the system manual

Operation with switching device 1405

With the switching device 1405 it is possible to install only 1 main external unit and 1 secondary external unit.

In "**Main external unit**" mode, lock-release (or actuator) commands are only executed if the external unit is in call or self-ignition mode. The "door-open" function is always deactivated.

In "**Secondary external unit**" mode, lock release (or actuator) commands are executed if the system is in standby mode or if the external unit is active.

If the system is in standby mode the first ***self-ignition*** command will activate the camera of the secondary external unit. Further commands will toggle between 2 (max) external units, activating alternately the main external unit and the secondary external unit.

For the diagrams, please refer to the **Audio/video kit** section in the system manual

Programming a generic call address

Take note of the DIP-switch settings. Enter programming mode.

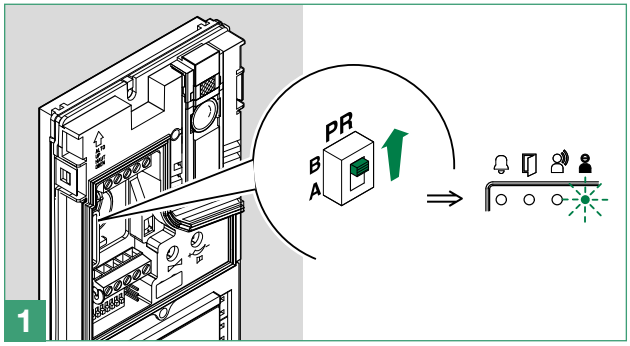

Set the user code using the DIP-switches in accordance with the **“addressing table”**

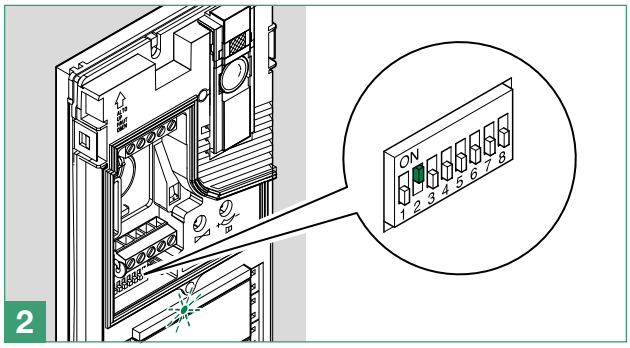

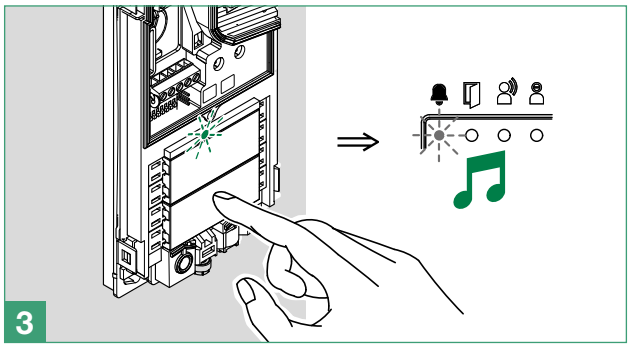

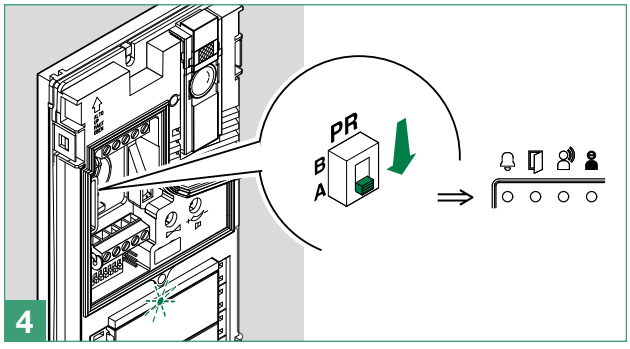

Reset the configuration of the DIP-switches.

Disabling the COM-RTE contact

Take note of the DIP-switch settings. Enter programming mode.

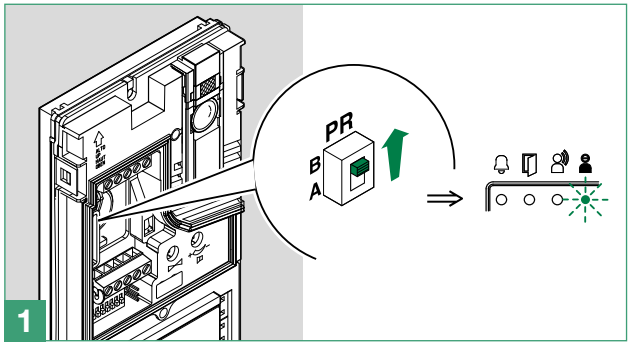

Set the DIP-switches to position 206 (ON 2,3,4,7,8) in accordance with the **“addressing table”**

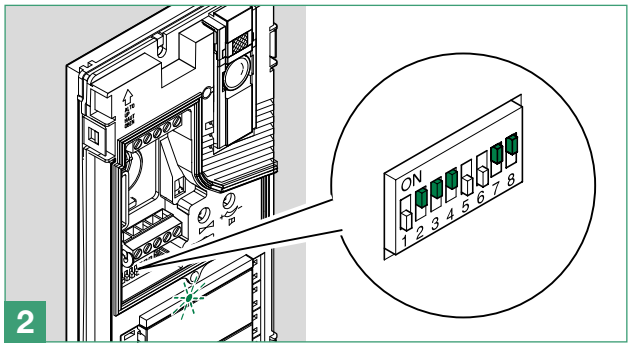

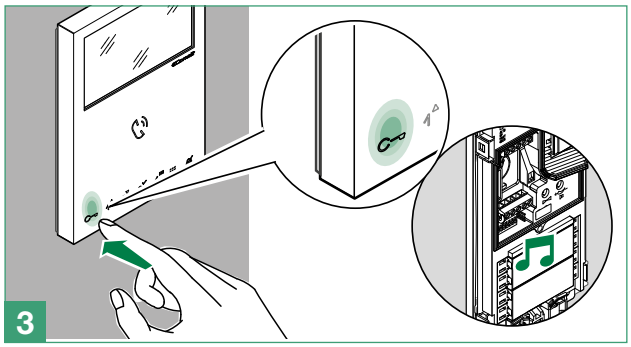

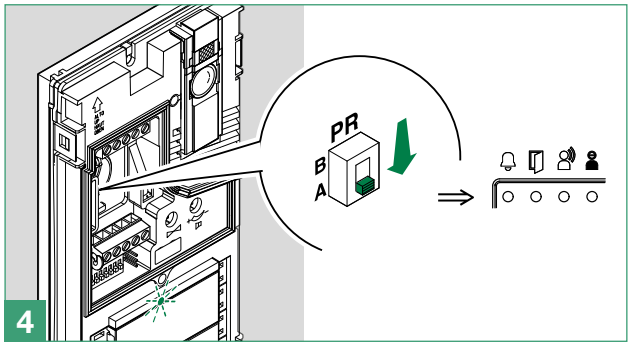

Reset the configuration of the DIP-switches.

To re-enable the function, repeat the procedure.

Connections

Door open indication use variant

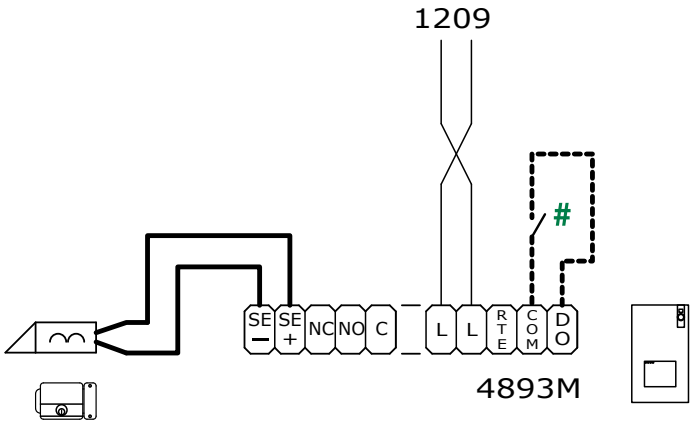

active input closed for DOOR OPEN signal

Variant for using a safety door lock and additional power supply

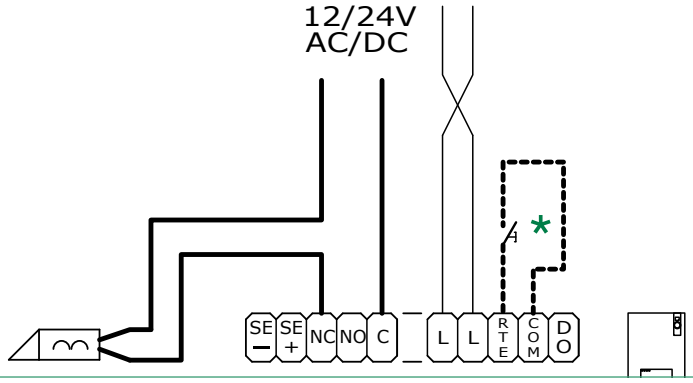

* Local door-opener button

Using the RC network for door lock filter on relay contacts

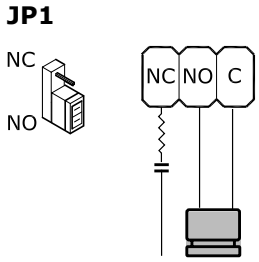

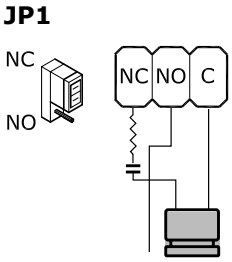

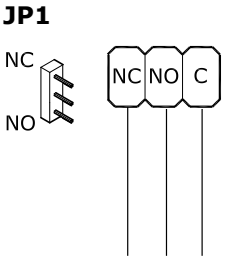

System performance and layouts

For further information of system performance and to view installation layouts:

- **Audio/video kit** for the creation of audio-video systems for individual residences.

Table of contents

Warning

Adapter plate for Quadra - Art. 4791 573

Mounting on flush-mounted box 573

BTICINO Robur.....574

Mounting Quadra 574

Faceplate accessory for Quadra (Art. 4893M) - Art. 4793MA, 4793MB, 4793MC..... 575

Adapter plate for Quadra - Art. 4791

Plate allowing installation of the Quadra external unit in 1- and 2-module flush-mounted boxes by Comelit, Bticino and Urmet.

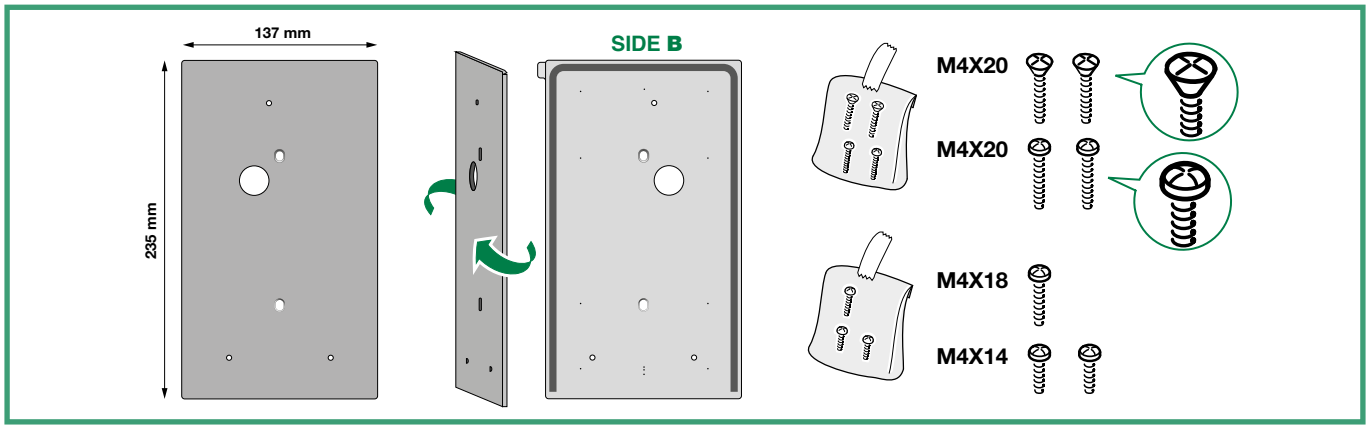

Mounting on flush-mounted box

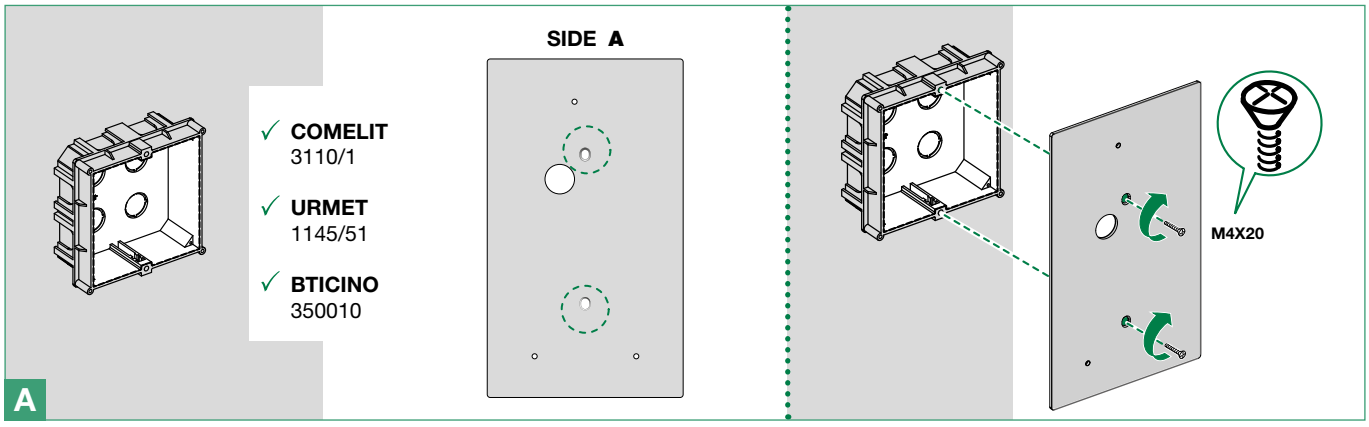

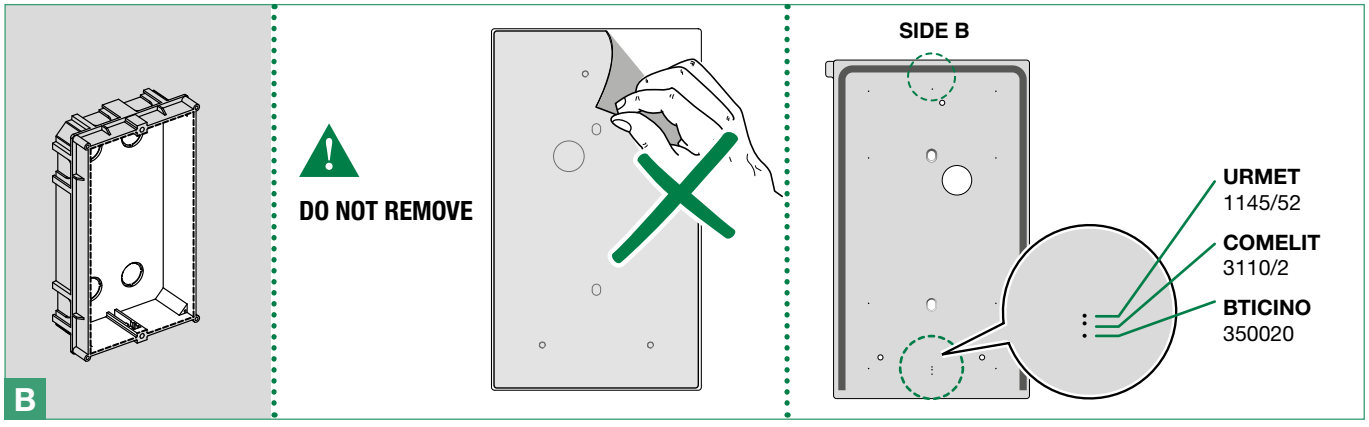

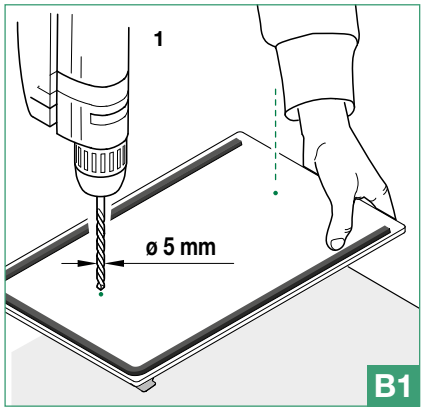

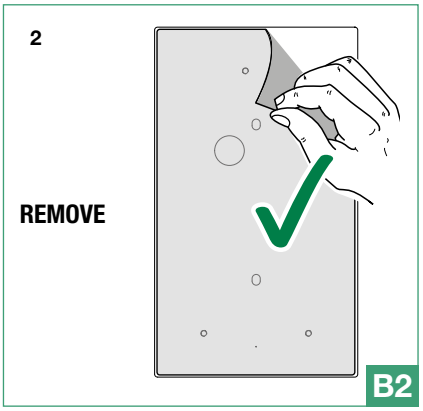

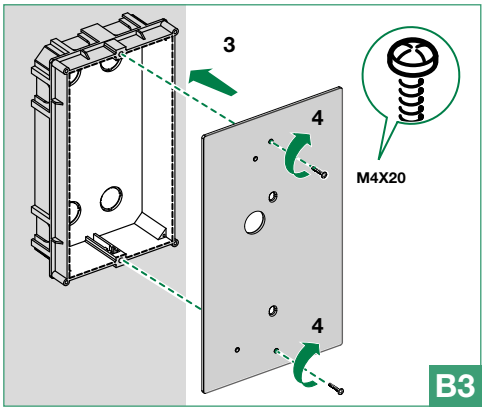

BTICINO Robur

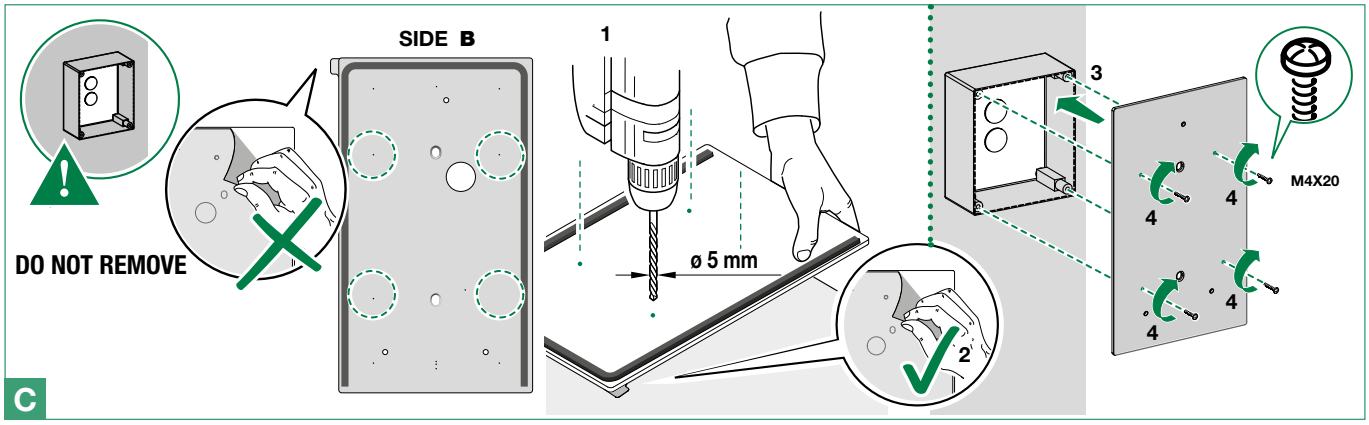

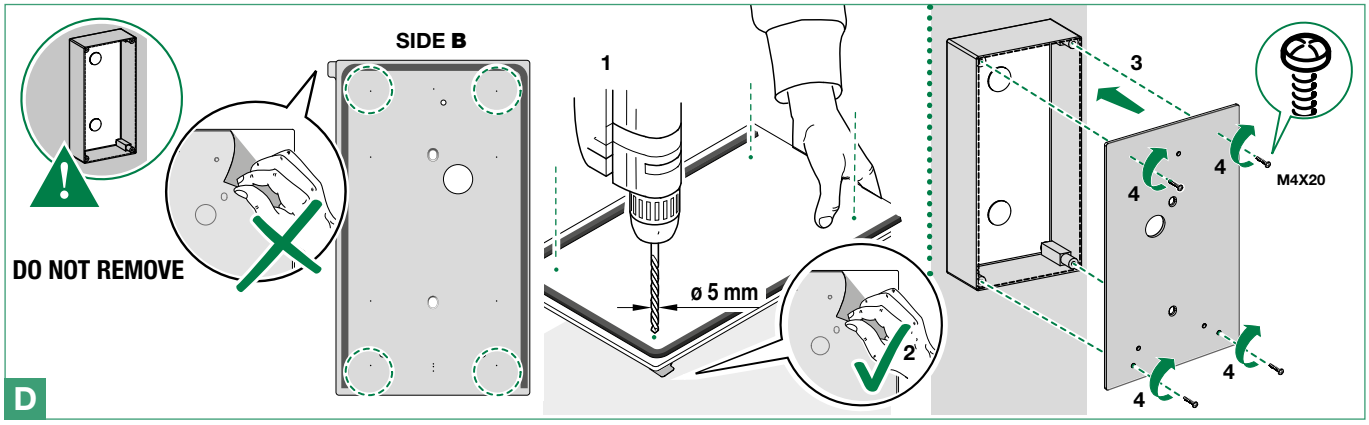

Mounting Quadra

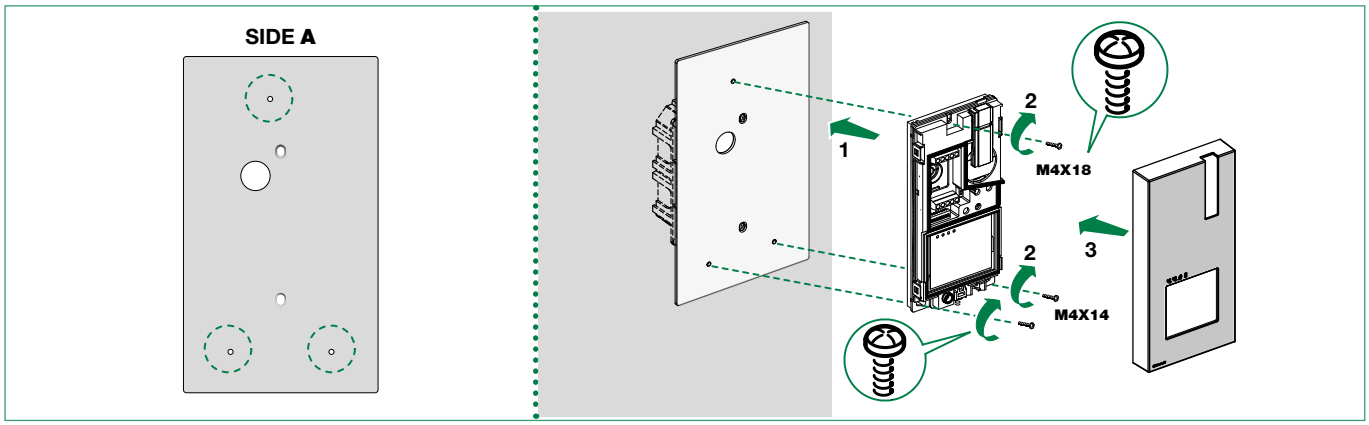

Faceplate accessory for Quadra (Art. 4893M) - Art. 4793MA, 4793MB, 4793MC

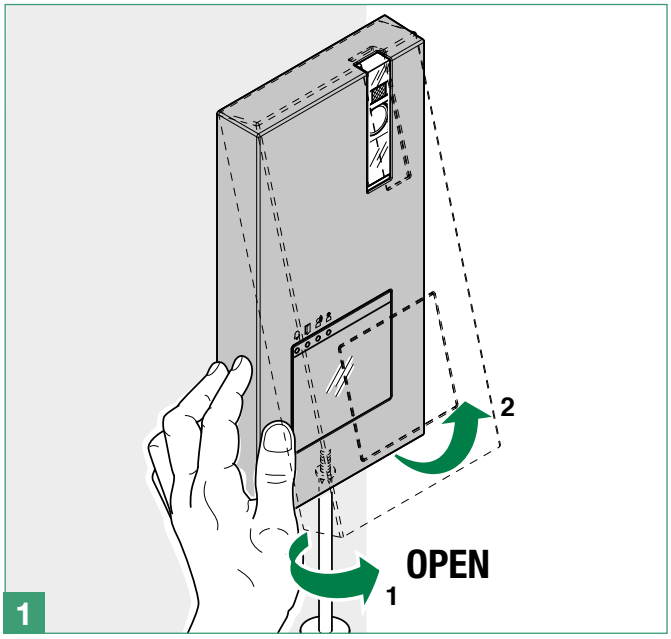

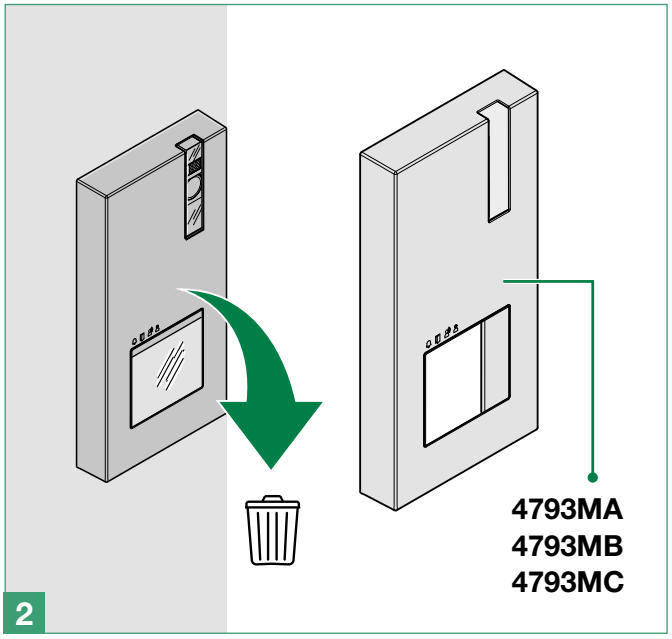

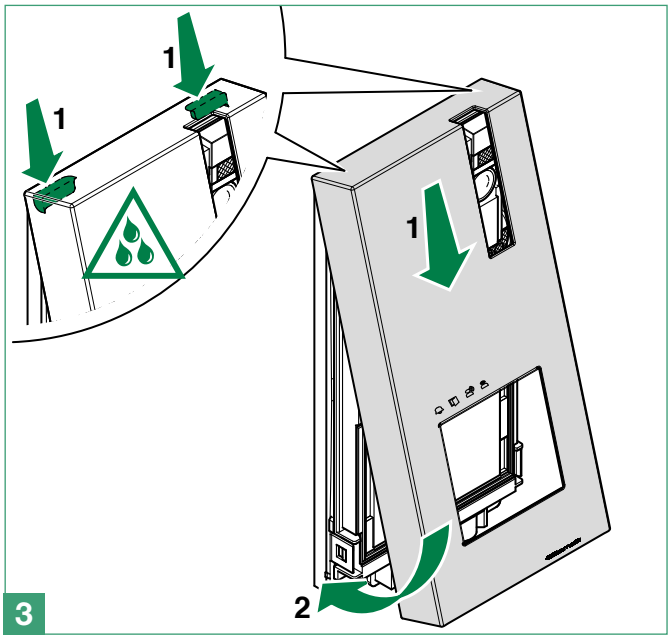

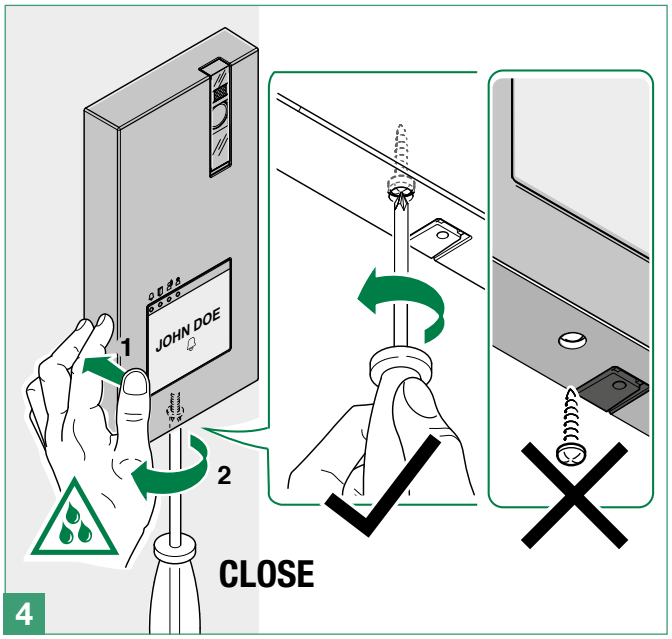

To ensure that the product remains water-tight: make sure that the fixing procedure is carried out correctly.

Table of contents

Warning

Description 577

Installation 577

Nameplate removal method 577

Connections 578

Building Kit system 578

Simplebus Top system 578

Programming 578



Art. 3061M master button - Art. 3061S slave button

Description

Master button for use in both 2-wire and ViP digital systems, consisting of a nameplate and a call pushbutton in steel. The brightness level of the white LED can be adjusted on the back. Installation should take place on 2.5 mm thick metal plates.

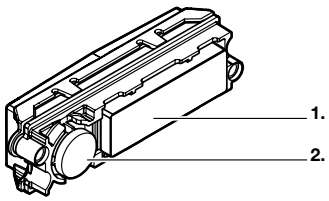

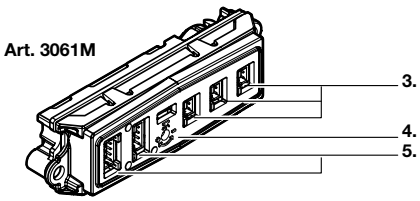

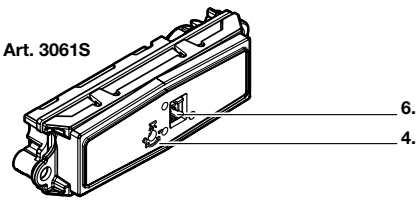

1. Nameplate

2. Steel call pushbutton

3. P2, P3, P4 connectors for slave button connection

4. LED brightness control

5. Connector for 8-pole cable (length 25 cm), for connection to the audio/video module or to the next master button

6. Connector for 4-pole cable (length 12 cm), for connection to the master button

Clean using a damp cloth.
Do not use alcohol or other aggressive products.

Installation

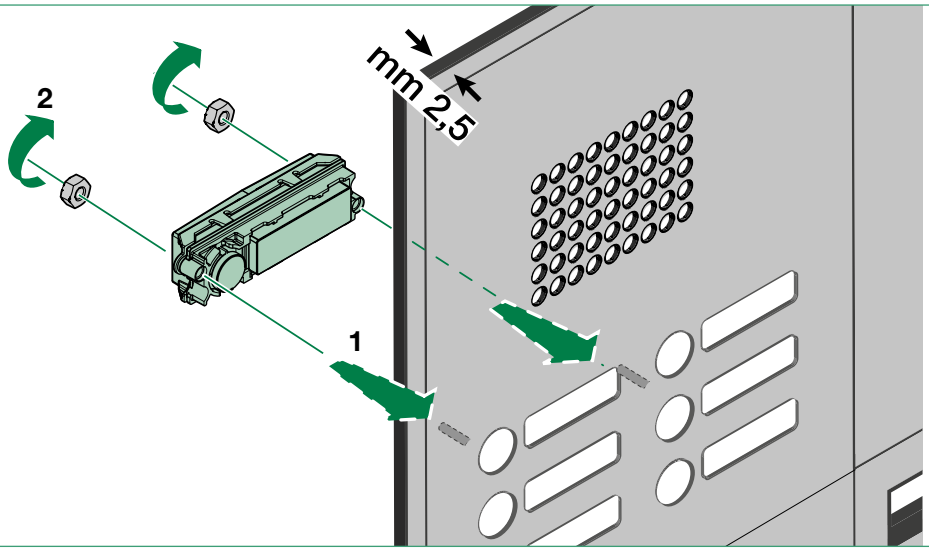

The measurements of art. 3061M and art. 3061S, required for the creation of custom metal plates, are provided on the website **pro.comelitgroup.com**

Nameplate removal method

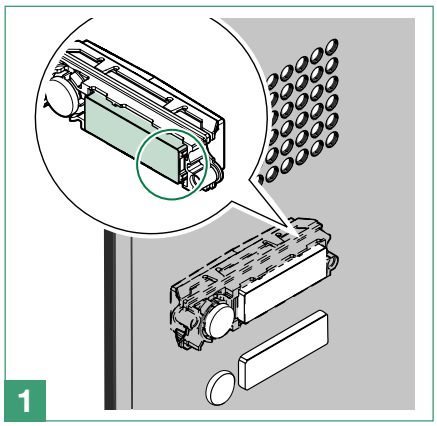

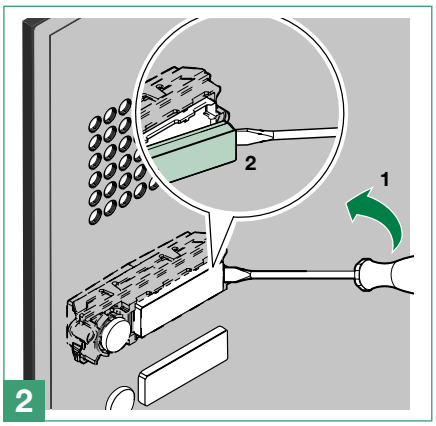

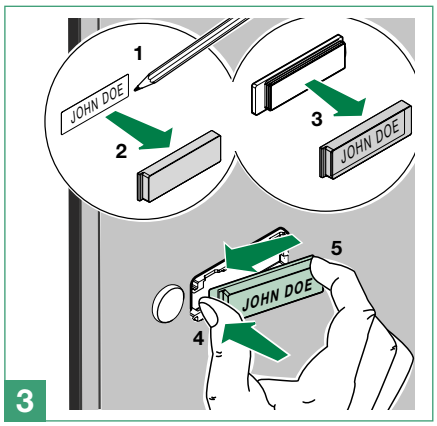

Connections

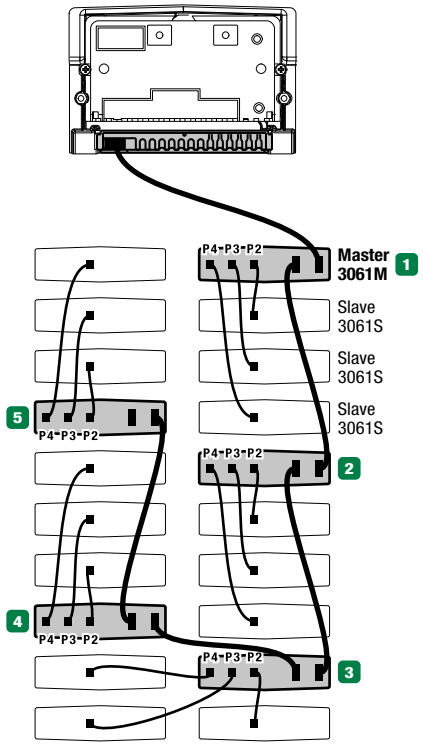

- Connect art. **3061M** master to the audio/video module or to the next master button by means of the 8-pole cable (length 25 cm) supplied. Art. 3061M is equipped with electronics to manage 3 slave buttons. Use connectors **P2, P3, P4**.
- Connect art. **3061S** slave to the corresponding master button by means of the 4-pole cable (length 12 cm) supplied.

Building Kit system

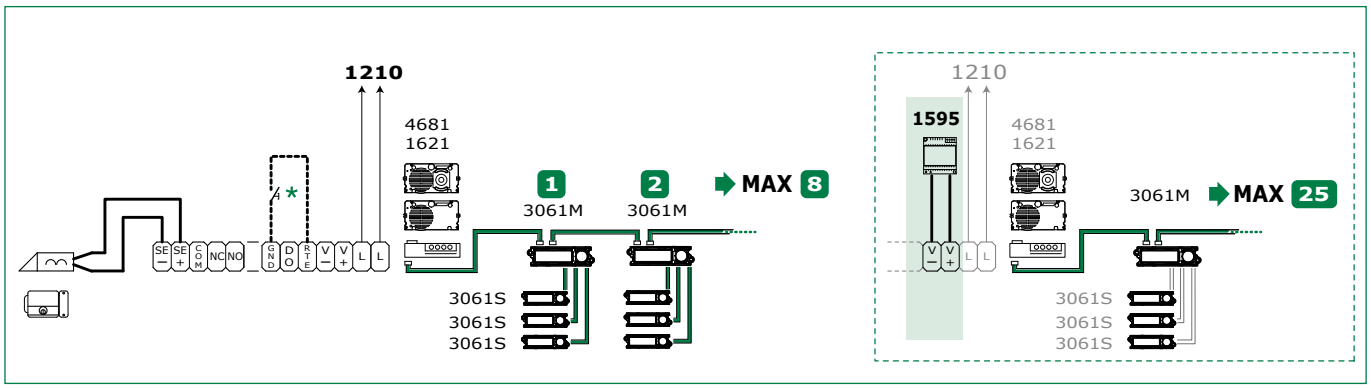

Simplebus Top system

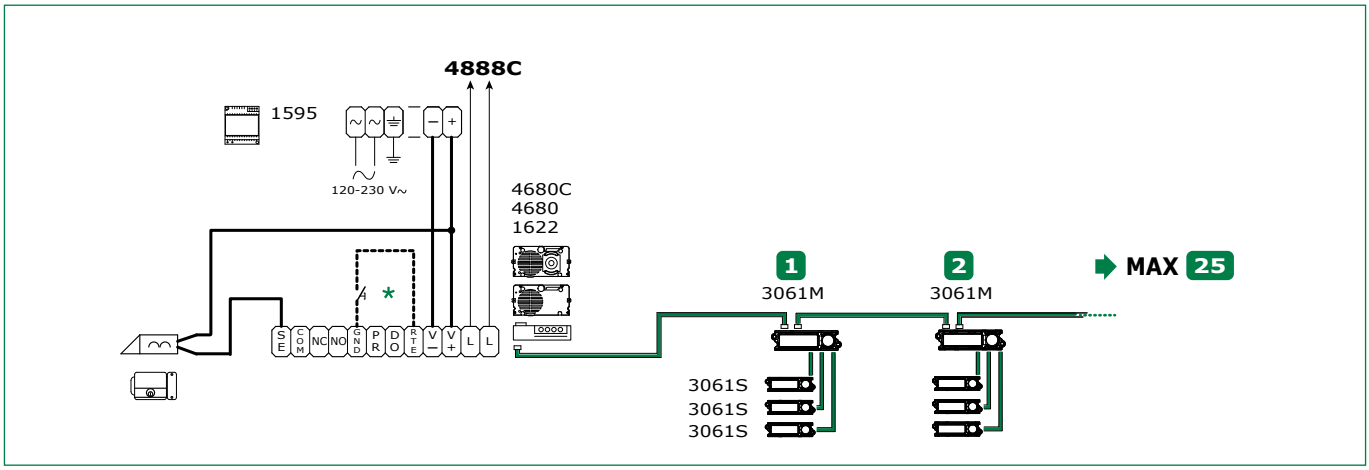

Programming

For information regarding programming, refer to the audio/audio-video module manual

Table of contents

Warning

Description 581

Technical features 581

Connection 582

System performance and layouts 582

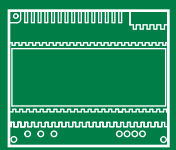

Power supply unit Art. 1209

Description

31 Vdc power supply unit for 2-wire KIT, for direct connection to the external unit and internal unit. Equipped with overload and short circuit protection. Input voltage 110-240VAC. Dimensions 106x89x62mm (6 DIN modules).

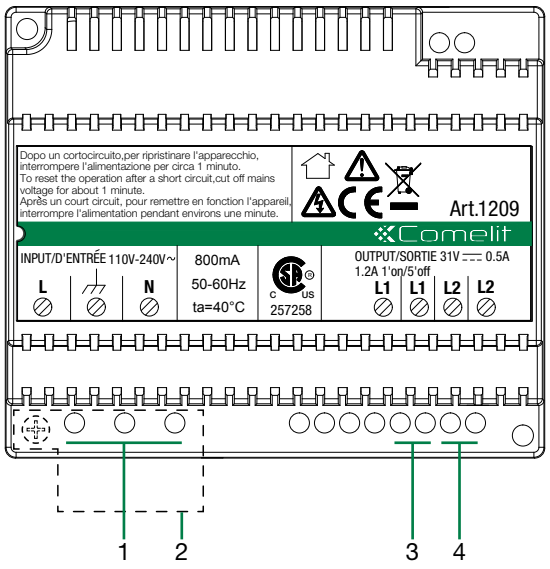

1. **L⏚N** mains power input 110-240 V~
2. Terminal protection
3. **L1 L1** main bus line output (31 V ⎓)
4. **L2 L2** riser bus line input (31 V ⎓)

A suitable omnipolar switch with a contact opening of at least 3mm must be installed upstream of the video entry phone system.
- ***Disconnect the power supply before carrying out any operations on the wiring.***
- ***Replace the protections on the terminals.***
- ***Do not obstruct the ventilation and cooling slots or apertures.***

Technical features

MAIN FEATURES	
Alternating input voltage (VAC)	110÷240
Output voltage (VDC)	33
Applicable to DIN rail	Yes
Number of DIN modules	6
Max. current delivered (A)	1.20
GENERAL DATA	
Product height (mm)	62
Product width (mm)	106
Depth (mm)	89
Type of finish	Plastic
COMPATIBILITY	
Kit audio/video system	Yes
ELECTRICAL SPECIFICATIONS	
Maximum power delivered (W)	37

Connection

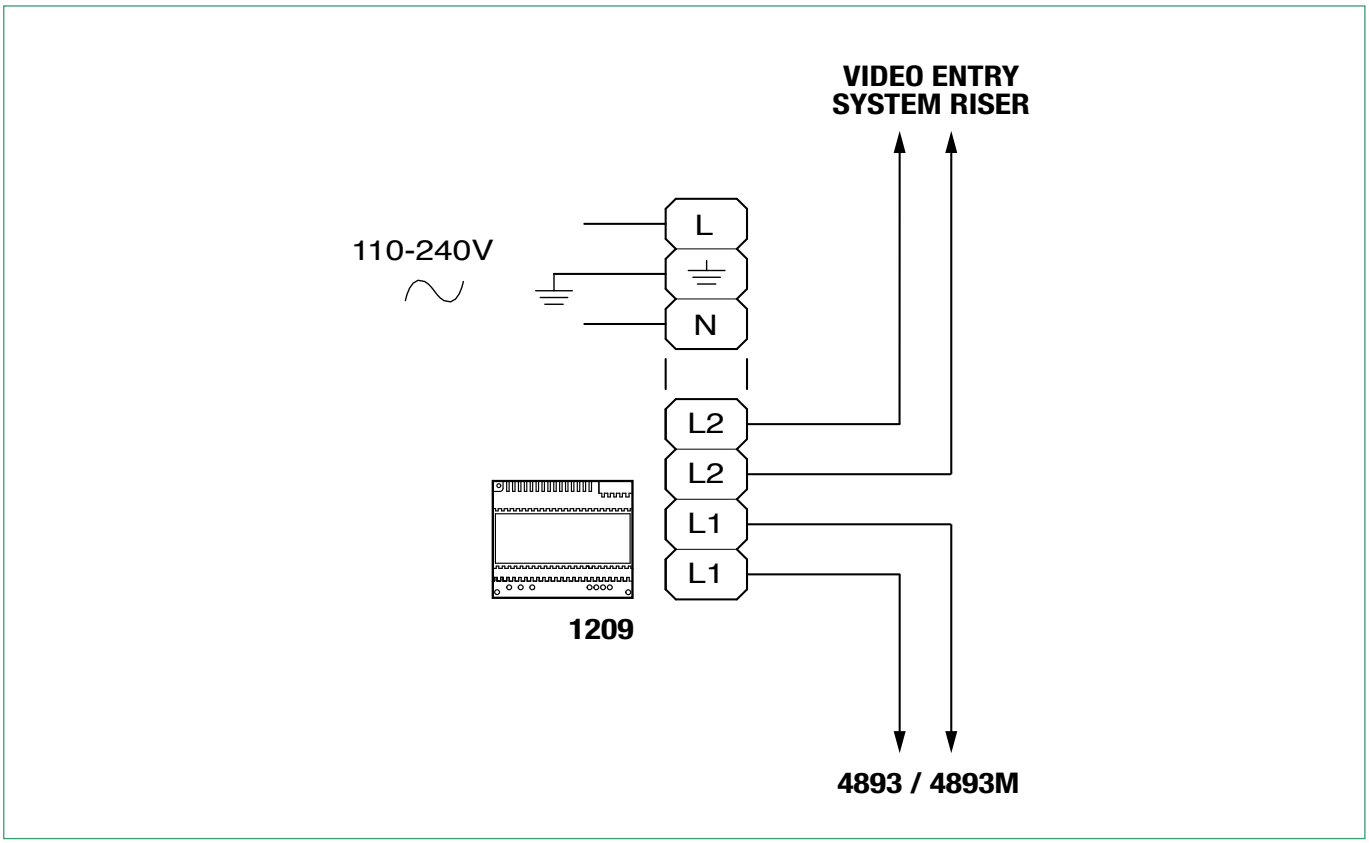

System performance and layouts

For further information of system performance and to view installation layouts, click on the system type that best meets your requirements:

- **Audio/video kit** for the creation of audio-video systems for *individual residences.*

Table of contents

Warning

Description 585

Technical specifications 586

Connections 587

Connections 1210 587

System performance and layouts 587

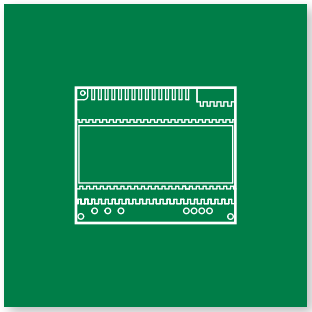

Power supply unit Art. 1210

Description

*Article **1210** is a power supply unit for "Building Kit" (pure 2-wire) systems.*

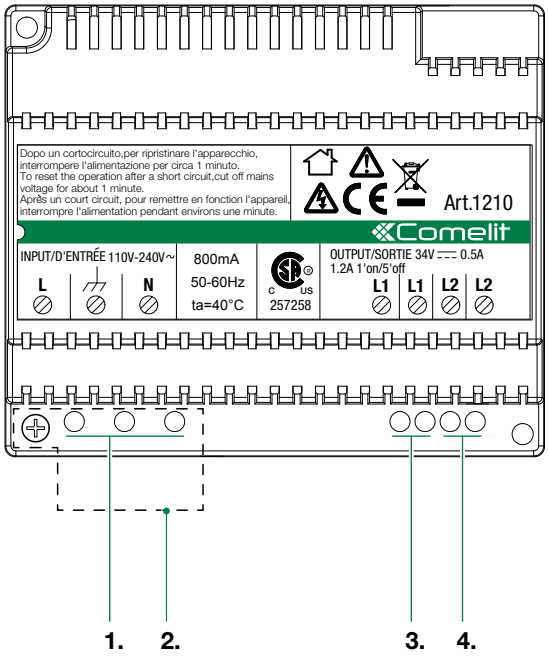

1. **L** ⏚ **N** mains power input 110-240 V~
2. Terminal protection.
3. **L1 L1** main bus line output (34 V).
4. **L2 L2** riser bus line input (34 V).

A suitable omnipolar switch with a contact opening of at least 3mm must be installed upstream of the video entry phone system.
- ***Disconnect the power supply before carrying out any operations on the wiring.***
- ***Replace the protections on the terminals.***
- ***Do not obstruct the ventilation and cooling slots or apertures.***

Technical specifications

MAIN SPECIFICATIONS	
Input voltage AC	110-240 Vac
Output voltage DC	34V
Plug-in power supply unit	No
Applicable to DIN rail	Yes
Number of DIN modules	6
Max. current delivered (A)	1.2A

GENERAL INFO	
Product height (mm)	108mm
Product width (mm)	90mm
Product depth (mm)	62mm
Operating temperature (°C)	0-40°C

AUDIO/VIDEO SPECIFICATIONS	
Audio/video system	Yes

ELECTRICAL SPECIFICATIONS	
Maximum current absorption (mA)	800mA
Maximum power delivered	40W

Connections

Connections 1210

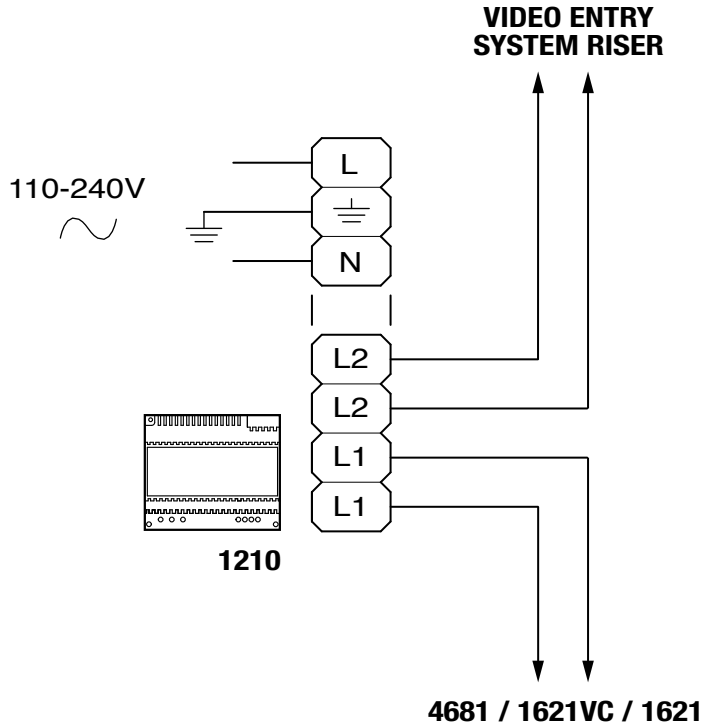

System performance and layouts

For further information of system performance and to view installation layouts, click on the system type that best meets your requirements:

- **Building Kit audio/video system** for the creation of audio-video systems for *small apartment blocks.*
- **SB2 audio system** for the creation of audio systems for *residential complexes.*

Table of contents

Warning

Description 589

Technical features 590

Installation 591

Wire ducts 591

Connection 592

Programming 592

Configure number of users via Jumpers JP1 and JP2 592

Auto-configuration reset via Jumper JP4 592

System performance and layouts 593

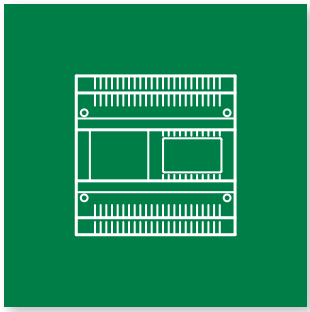

SBTOP system mixer-power supply Art. 4888C

Description

Simplebus Top audio/video mixer with 1 IN and 4 OUT. Receives the incoming Simplebus 1 audio/video signal and supplies the Simplebus Top audio/video signal across 4 outputs.

A maximum of 100 devices can be connected between telephones and monitors, distributed over 4 outputs. Up to 25 monitors can be connected in cascade for each riser branch.

Equipped with an LED indicating any short-circuits on the riser line to the users.

230 V mains powered. AC output facility for powering additional devices such as switching device art. 1224A, 1424 and/or actuator relay art. 1256. Allows TOP functions by default, for example intercom facility between users without the aid of an interface or porter switchboard. Fitted with 4 terminals for line termination Art. 1216. Dimensions: 140x140x67 mm (8 DIN modules).

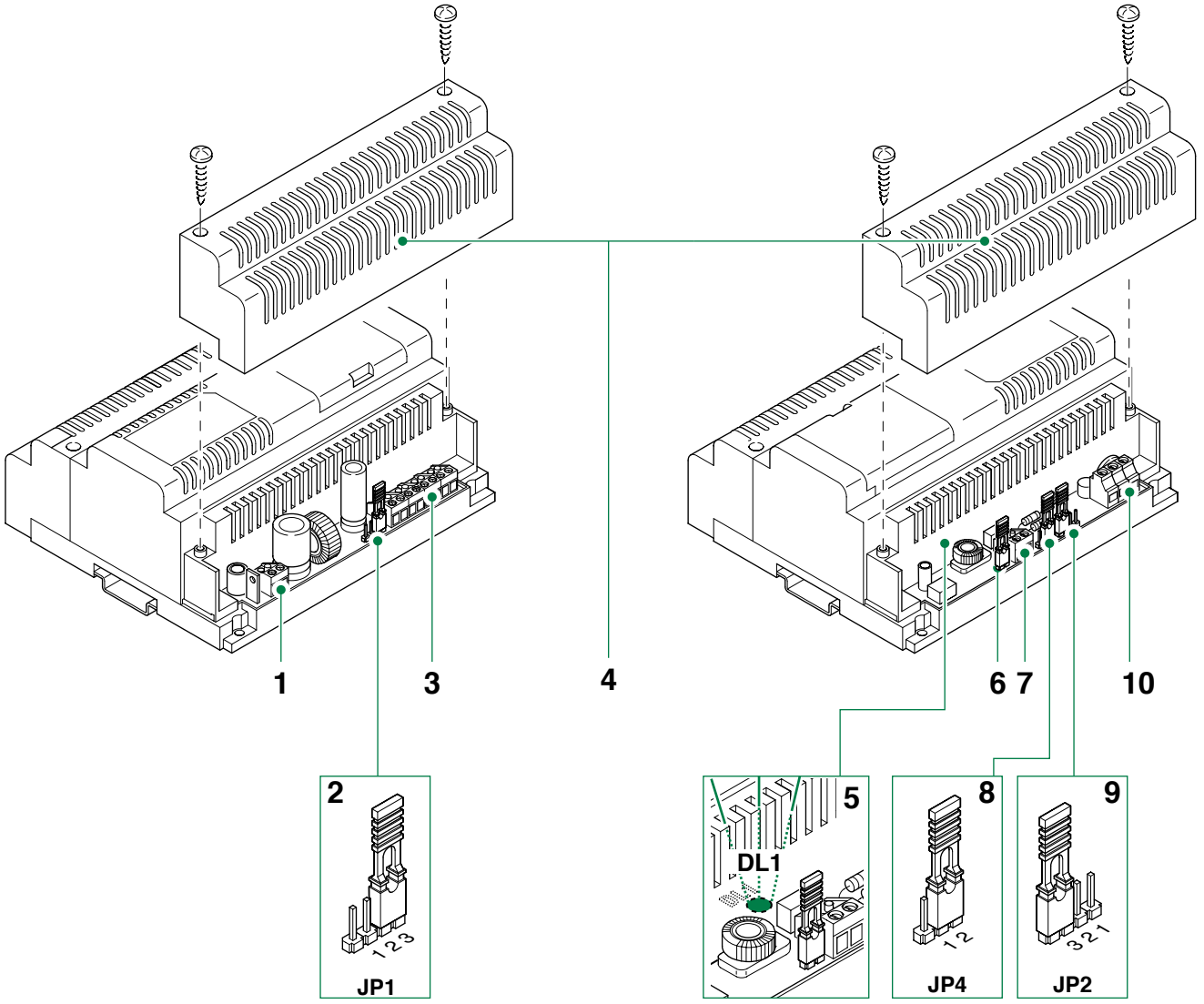

1. **- +** 17,5V +-5% 100mA max. Output for power supply Art. 1224A, Art. 1424 or Art. 1256.
2. **JP1** Jumpers to be set according to the total number of users connected to the Mixerpower supply Art. **4888C**.
3. **L1 L1** branch output 1 of riser
   L2 L2 branch output 2 of riser
   L3 L3 branch output 3 of riser
   L4 L4 branch output 4 of riser.
4. Terminal protection.
5. **DL1** indicator led.
   Continuous flashing: indicates an extended short-circuit on one of the mixer outputs.
6. **JP5 f**or video closure if several 4888C items are connected in cascade.
7. **Lin Lin** connection to the line coming from the external unit.
8. **JP4** device reset.
9. **JP2** Jumpers to be set according to the number of total users connected to the Mixer-power supply **Art. 4888C.**
10. **LN** ~230V~. Mains alternating: 230Vac (+15/-10)% 50/60Hz 0,7A.
    ⏚ terminal to be connected to the earthing system.

Technical features

MAIN FEATURES	
Product height (mm)	67
Product width (mm)	140
Product depth (mm)	140
Operating temperature (°C)	-5 ÷ 40
DIN rail mounted	Yes
DIN modules (no.)	8
Maximum current absorption (mA)	700

GENERAL DATA	
Type of finish	Plastic
Product colour	White

COMPATIBILITY	
Simplebus Top audio/video system	Yes

Installation

Appliance exclusively for indoor use.
High voltage, proceed with caution.
Install inside a closed electrical panel so that it may only be accessed by authorised personnel.

A suitable omnipolar switch with a contact opening of at least 3mm must be installed upstream of the video entry phone system.

- ***Disconnect the power supply before carrying out any operations on the wiring.***
- ***Replace the protections on the terminals.***
- ***Do not obstruct the ventilation and cooling slits or openings.***

Wire ducts

- If it is necessary to run (even for short distances) sections of cable entering the mixer Art. 4888C (section SB1) through the same ducting as sections exiting the mixer Art. 4888C (section SBTOP), always use separate sheathed cables.
- If it is necessary to run (even for short distances) sections of cable exiting various mixers Art. 4888C (section SBTOP) through the same ducting, always use separate sheathed cables.
- Do not use pairs other than the specified multipolar cable.
- Do not use loose cables.

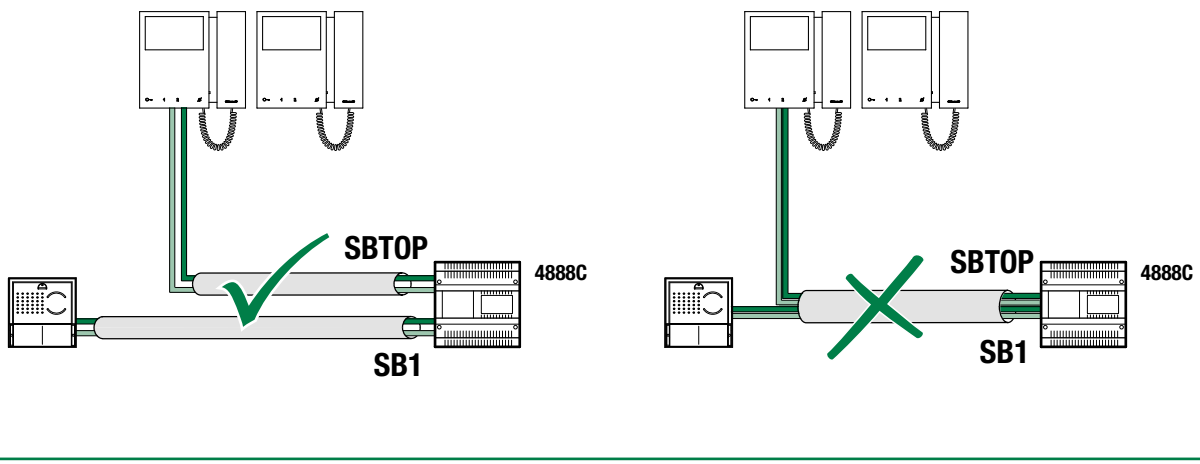

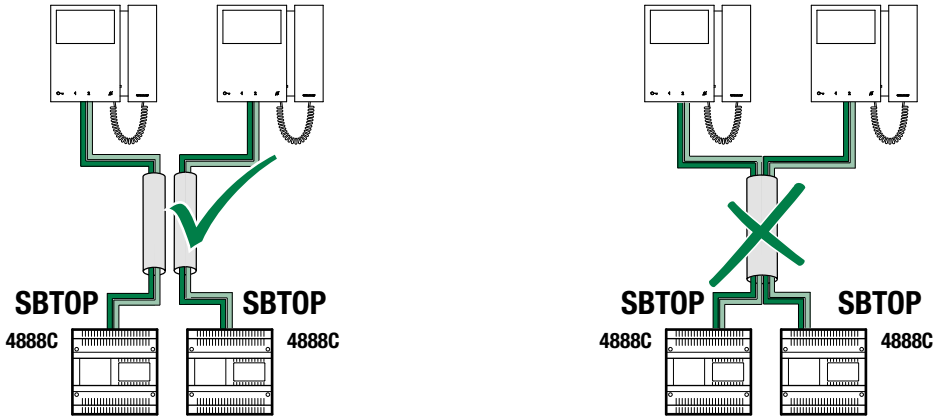

Connection

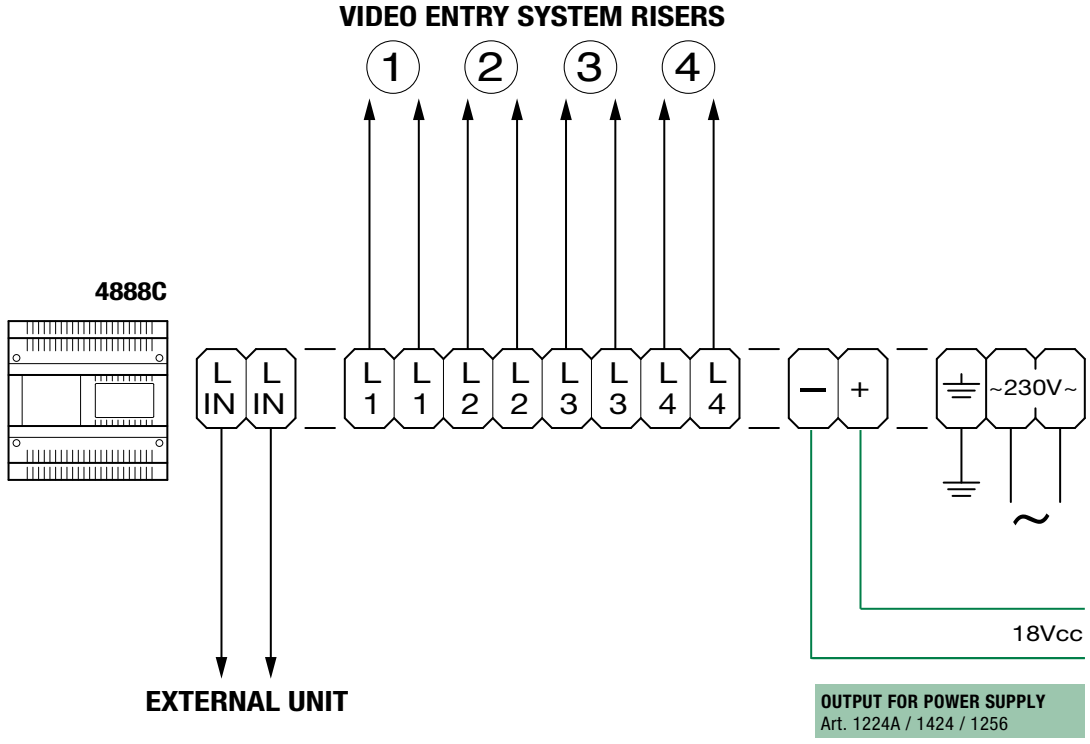

Programming

Configure number of users via Jumpers JP1 and JP2

Systems with 0 to 15 users		Systems with 16 to 35 users		Systems with 36 to 100 users	
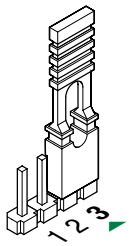	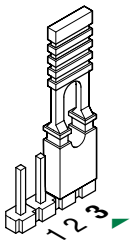	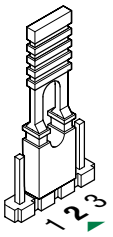	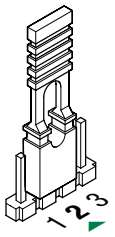	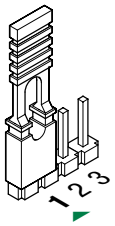	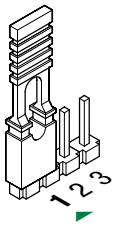
JP1	JP2	JP1	JP2	JP1	JP2

Auto-configuration reset via Jumper JP4

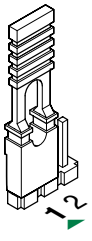	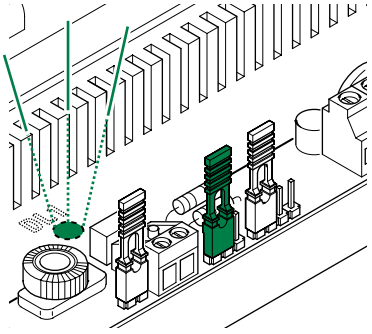	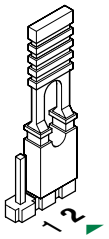
JP4		JP4
1. Set JP4 to position 1 to cancel auto-configuration of the item.	**2.** If LED DL1 is lit steadily, this indicates that the cancellation procedure has been successful.	**3.** Reset JP4 to position 2 (factory setting) and check that LED DL1 switches off

System performance and layouts

For further information of system performance and to view installation layouts, click on the system type that best meets your requirements:

- **SBTOP audio/video system** for the creation of audio-video systems for residential complexes.

Table of contents

Warning

Description 595
Programming keys and display 596
Alphanumeric keypad 596
General description 597
Technical features 597
Connection 598
Operation 599
U1 How to answer a call from an internal unit 599
U2 How to answer a call from an external unit 599
U3 How to call an internal unit 599
U4 How to transfer a call from the external unit to an internal unit 600
U5 How to set up communication between 2 internal units (intercom function) 600
U6 How to call an internal unit listed in the call log 600
U7 How to use the directory 601
U8 How to enter a name in the directory 601
U9 How to find a name in the directory 601
U10 How to delete a name in the directory 601
U11 How to change a name in the directory 601
U12 How to use the lock-release 602
U13 Day/night operating mode 602
U14 How to activate the “Follow me” function (available from R.I.006) 602
U15 Alarm signalling (available from R.I.006) 602
U16 How to activate an additional relay Art. 1256 (e.g. to activate the following independently and with a specific command: lights, CCTV alarm contacts, driveway gates, entrances without external units or other devices) (available from R.I.006) 602
U17 How to call a secondary switchboard from a main switchboard (available from R.I.006) 603
U18 How to call a main switchboard from a secondary switchboard (available from R.I.006) 603
U19 How to answer a call from the secondary switchboard to the main switchboard (available from R.I.006) 603
U20 How to answer a call from the main switchboard to the secondary switchboard (available from R.I.006) 603
U21 How to activate (MASTER) or deactivate (SLAVE) the main switchboards (available from R.I.006) 604
Settings 605
I1 - Change time 606
I2 - Change date 606
I3 - Day/night automatic mode 606
I3.1 - Activation/deactivation 606
I3.2 - Set times in auto mode 606
I3.3 - Weekly programming 606
I4 - Recording speed number 607
I5 - Change language 607
I6 - Downloard names from pc 607
I7 - All names delete 607
Configurations 608
C8.1 - Video mode configuration 609
(available from R.I.006) 609
C8.2 - Calling mode (available from R.I.006) 609
C8.3 - Type of switchboard (Simplebus Top mode) (available from R.I.006) 609
How to configure a main switchboard 610
How to configure a secondarya switchboard 610
C8.4 - Self-ignition on/off (available from R.I.006) 610
C8.5 - Triple call on/off (available from R.I.006) 611
C8.6 - Function CH-CH contact (available from R.I.006) 611
C8.7 - Function main cps+sec (available from R.I.006) 611
System performance and layouts 611

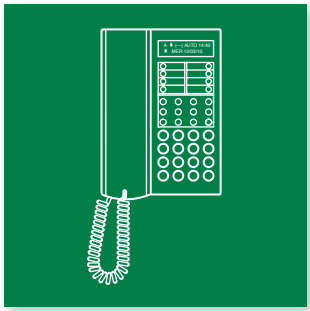

Porter switchboard Art. 1998A

Description

Porter switchboard in desk version with digital keypad and 32-character alphanumeric display. Allows the code and name of the called and calling users to be displayed, keeping unanswered calls stored in the memory. Day/Night mode and user/user intercom service. Allows call addressing for up to 120000 users. It also allows call transmission with indirect codes, management of alarm indications originating from users. Can be used as a main or secondary switchboard. Up to 1000 names can be stored. Can be used in SB1 audio systems.

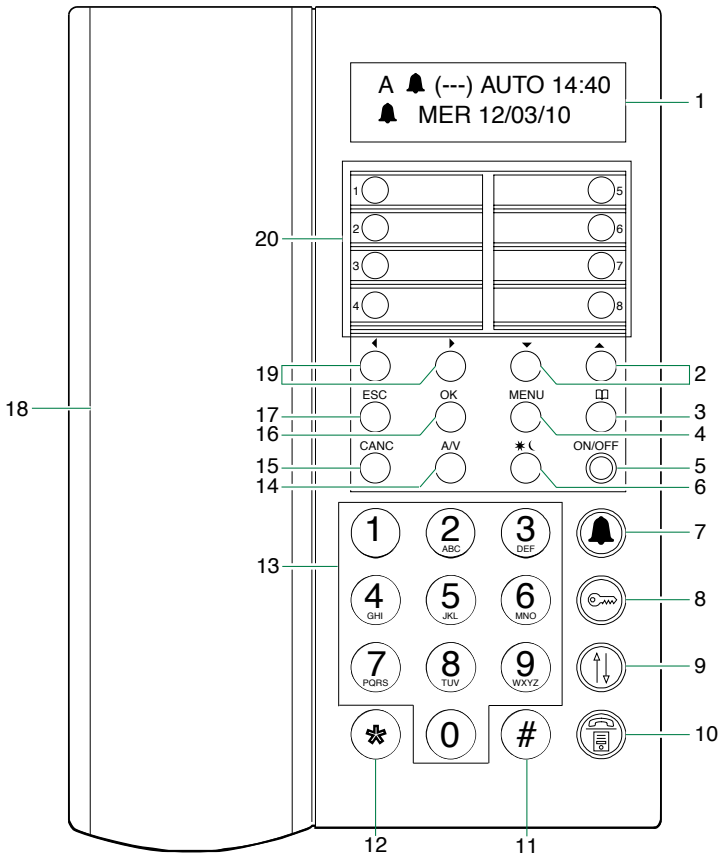

1. Message indication display

2. ▼▲ Directory and menu scroll keys

3. 🕮 Directory key

4. MENU key

5. ON/OFF Power on/off (press and hold for 2 seconds)

6. ✷ ☾ Day/night key

7. 🔔 Call key

8. 🔑 Lock-release key

9. Follow Me key

10. Call hold key

11. # Key used to call the main switchboard from the secondary switchboard

12. * Key used to activate an additional relay

13. Alphanumeric keypad

14. A/V “MASTER” “SLAVE” control key for main or secondary switchboards in series

15. CANC Key used to cancel a call or delete entered data

16. OK Confirm key

17. ESC Exit menu key

18. Handset

Do not press and hold the audio hook while the handset is lifted

19. ◄► Keys used to scroll through missed calls

20. [1]○ Speed numbers

Description of terminal block:

24 ~ 24V AC power supply

0 ~ 0V AC power supply

LP1 LP2 Incoming data line from external unit

LM LM Data line to the risers

CH CH Free contact for “CALL REP.” or “ENABLE EXTERNAL MONITOR”

OUT OUT CNO output for remote camera control

C NO Normally open contact for “FOLLOW ME” function

TX RX GND Serial port RS232 for connection to the PC in order to download the names in the directory using Art.1249/A , or for connection to the remote switchboard in systems where several switchboards are connected in series or in parallel.

Programming keys and display

MENU To enter the programming menus

▼ Can be used to select the various menu options

◀ ▶ Can be used to move the cursor in order to change the entered data

OK Confirm the displayed information or data entered

CANC Delete the data entered

ESC Cancelling the selected option and exiting the programming menu

Switchboard display screens:

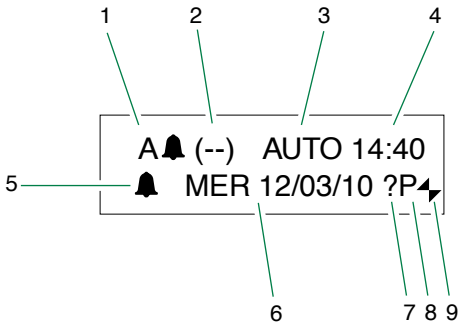

1 **A** AUDIO mode
V VIDEO mode

2 **(- -)** indicates the number of unanswered calls in **DAY** mode
if the text **NIGHT** appears, it indicates the system is operating in this mode

3 operation in **AUTO** mode is only displayed during DAY mode

4 time (hours: minutes)

5 indication of unanswered calls in NIGHT mode

6 day (Mon, Tue, etc.) and date (day/month/year)

Available from IR006:

7 **!** the switchboards configured are NOT compatible
? the switchboard has not yet detected the presence of the remote switchboard

8 **P** indicates that the switchboard is configured in parallel
S indicates that the switchboard is configured in series

9 ↯ fixed indicates correct operation of the serial line
↯ flashing indicates malfunctioning of the serial line

LM KO indicates a short circuit on the riser line, the text is accompanied by a tone which sounds repeatedly. The switchboard rejects any attempts to call or transfer calls to internal units; however, all incoming calls from the external unit will be dealt with normally.

!PC when the menu for point 6- DOWNLOAD NAMES FROM PC is activated, indicates that the serial port is ready and waiting to receive data from the PC.

Alphanumeric keypad

For several of the functions, the keypad can be used to enter both numbers and letters; this can be done by pressing the same button several times, for example if you press 2 several times, A - B - C - 2 will appear in succession. If a different button is pressed, the cursor on the display will move onto the next letter.

▶ Moves the cursor onto the next letter

◀ Moves the cursor onto the previous letter

OK Confirms the data entered

CANC Deletes the data entered

General description

The main functions of the switchboard are as follows:

- call an internal unit
- receive calls from external units and transfer them to internal units as necessary
- receive routine or alarm calls from the internal units
- control external unit electric locks
- activate a relay

The porter switchboard also offers:

- DAY/NIGHT operation, which can only be used to enable switchboard functions in specific time bands programmed by the user;
- a CALL LOG, in which the calls from internal units which could not be answered are stored;
- a DIRECTORY which can be programmed so as to identify the caller easily.

Technical features

MAIN FEATURES	
Product height (inch)	9.06
Product width (inch)	6.3
Product depth (inch)	3.94
Operating temperature (°F)	23 ÷ 104
Maximum current absorption (mA)	200
SOFTWARE/FIRMWARE SPECIFICATIONS	
Number of user codes	1500
No. of storable users	1500
FUNCTIONS	
Alarm function	Yes
Actuator control function	Yes
Intercom function	Yes
Key button function	Yes
HARDWARE SPECIFICATIONS	
Customisable housing	No
Sensitive Touch technology	No
GENERAL DATA	
Type of finish	Plastic
Product colour	White
COMPATIBILITY	
Simplebus Top audio/video system	Yes
Simplebus 1 audio system	Yes
MOUNTING/INSTALLATION	
Desk base-mounted	Yes
CONNECTIVITY	
Type of connections/ports	RS232
RS232 ports	1

Connection

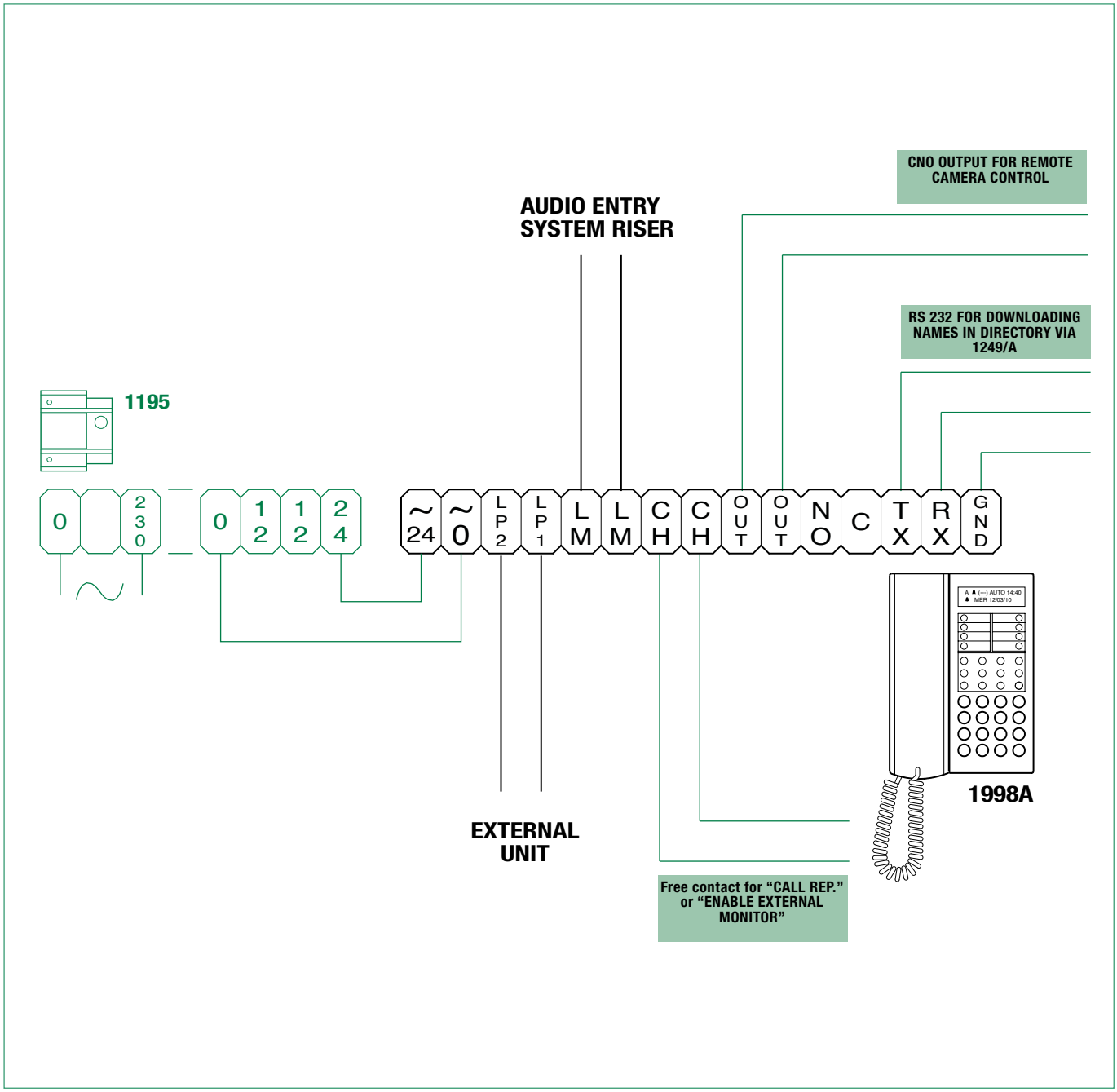
CNO OUTPUT FOR REMOTE CAMERA CONTROL
AUDIO ENTRY SYSTEM RISER
RS 232 FOR DOWNLOADING NAMES IN DIRECTORY VIA 1249/A
1195
0
2 3 0
0
1 2
1 2
2 4
~ 24
~ 0
LP 2
LP 1
LM
LM
CH
CH
OUT
OUT
NO
C
TX
RX
GND
1998A
EXTERNAL UNIT
Free contact for "CALL REP." or "ENABLE EXTERNAL MONITOR"

Operation

The following functions are the main features of the switchboard and its operating mode, these can all be accessed directly, without using the menus.

U1 How to answer a call from an internal unit

When the switchboard receives a call from an internal unit:

» *the NAME of the internal unit making the call (if listed in the directory, see "U8 How to enter a name in the directory") or the address of the caller (e.g. 002) is displayed.*

CALLED FROM
USER 002

▶ to **answer** the call originating from the internal unit, lift the handset within 30 seconds;

» *the switchboard begins communicating with the internal unit, the maximum duration of the conversation is 2,5 minutes;*

COMMUNICATING
WITH USER 002

▶ to end the conversation, **hang up** the handset.

▶ to **reject** the call, press **CANC**.

CAUTION!

If the switchboard is busy or the switchboard operator is momentarily absent and cannot answer within 30 seconds, the call will be added to the log, see "U6 How to call an internal unit listed in the call log".

U2 How to answer a call from an external unit

The switchboard **must** be in DAY mode, in NIGHT mode it will only answer direct switchboard calls.

The switchboard can receive a call from an external unit:

- **directly addressed to an internal unit**, in this case the NAME of the call recipient (if a name has been assigned to the corresponding code in the directory, see "U8 How to enter a name in the directory") or the address of the call recipient (es. 002) is displayed.

CALL FOR
USER 002

or

- **or directly addressed to the switchboard** (address=240)

CALL FOR
SWITCHBOARD

- to **answer** the call originating from the internal unit, lift the handset within 30 seconds;

» *the switchboard begins communicating with the external unit, the maximum duration of the conversation is 2,5 minutes;*

COMMUNICATING
TO EXTERNAL UNIT

▶ press if necessary to activate the external unit electric lock; if the lock-release is activated some confirmation tones will be emitted;

▶ to end the conversation, **hang up** the handset.

▶ to **reject** the call, press **CANC**.

CAUTION!

In NIGHT mode (see "U13 Day/night operating mode"), calls from the external unit directed to an internal unit appear on the display, but cannot be intercepted by the switchboard.

U3 How to call an internal unit

The switchboard can use 3 different methods to call an internal unit:

- enter the internal unit number (#) and press .

USER 002
TO CALL

- scroll through the directory using the keys until the desired name is displayed and press .

JENNIFER
CODE: 002

- **press the corresponding speed number** (ex. speed number 1= stored code "002", see **"I4 - Recording speed number"**).

CALL
JENNIFER

» *if the call has taken place correctly:*

CALLING
USER 002

- *if the call has* **not** *taken place correctly:*

USER 002
NOT AVAILABLE

» *if the internal unit is busy:*

BUSY
USER

- *When the* **internal unit connects to the audio** *line, communication with the switchboard begins; the maximum duration of the conversation is 2,5 minutes..*

(#) The number to be entered depends on the switchboard configuration see **"C8.2 - Calling mode (available from R.I.006)"**; contact your usual installer.

U4 How to transfer a call from the external unit to an internal unit

When the switchboard receives a call from an external unit, directed to an internal unit:

» *the NAME of the call recipient (if a name has been assigned to the corresponding code in the directory, see "U8 How to enter a name in the directory").*

CALL FOR
USER 002

▶ to **answer** the call originating from the external unit, lift the handset within 30 seconds;



» *the switchboard begins communicating with the external unit, the maximum duration of the conversation is 2,5 minutes;*

COMMUNICATING
TO EXTERNAL UNIT

▶ press ☎ to put the external unit on hold;

CALL FOR
USER 002

» *it is now possible for the switchboard to call the desired internal unit by pressing 🔔.*

To transfer the call to another internal unit, you will need to call it (see "U3 How to call an internal unit").

▶ When the **internal unit receiving the call is connected to the audio line**, it begins communicating with the switchboard; if the external unit is a video unit, the call recipient monitor switches on and the image from the external unit appears.

COMMUNICATING
WITH USER 002

▶ To transfer the conversation to the external unit, press ⇅ ;

EXTERNAL
CALL EFFECTED

▶ to end the conversation, **hang up** the handset.



» If the **call did not take place correctly** or **if the system is busy**, the external unit remains on hold;

CALL FOR
USER 002

▶ press ☎ to resume communication with the external unit;

COMMUNICATING
TO EXTERNAL UNIT

▶ to end the conversation, **hang up** the handset.



» If the internal unit **does not accept** the transferred conversation, external unit remains on hold;

CALL FOR
USER 002

▶ cut off the conversation with internal unit and press ☎ to resume communication with the external unit;

COMMUNICATING
TO EXTERNAL UNIT

▶ to end the conversation, **hang up** the handset.



U5 How to set up communication between 2 internal units (intercom function)

When the switchboard is communicating with an internal unit (e.g. 002) which is trying to speak with another internal unit (e.g. 003):

▶ put the internal unit which is already connected (e.g. 002), on hold by pressing ☎;

▶ call the desired internal unit (e.g. 003, see "U3 How to call an internal unit");

CALLING
USER 003

When the **internal unit receiving the call is connected to the audio line**, it begins communicating with the switchboard;

COMMUNICATING
WITH USER 003

▶ To transfer the conversation to the other internal unit, press ⇅ ;

» *internal unit (003) begins communicating with internal unit (002); the maximum duration of this communication is 2,5 minutes;*

INTERCOM CALL
IN COURSE

▶ **hang up** the handset.



▶ Press **CANC** to reset an intercom call which has been active for more than one minute.

» If the internal unit **does not accept** the transferred conversation, or when the **system is busy**, or if the **call has not taken place correctly**, internal unit (002) remains on hold;

USER
ON HOLD

▶ cut off communication with internal unit (003) and press ☎ to resume communication with internal unit (002);

COMMUNICATING
WITH USER 002

▶ to end the conversation, **hang up** the handset..



CAUTION! If the external unit calls the switchboard during an intercom call between internal units which has been underway for more than one minute, the intercom call will be reset so that the switchboard can deal with the incoming call.

U6 How to call an internal unit listed in the call log

When the switchboard receives a call from an internal unit and it is not dealt with in the space of 30 sec. (operator momentarily absent or busy with another conversation), this is automatically stored in the call log.

If an internal unit has called several times, only the first call will be logged.

The switchboard can log a maximum of 10 unsuccessful calls. The eleventh call replaces the first.

If the porter switchboard is in DAY mode, the number of missed calls will appear on the display.

If the switchboard is in NIGHT mode, will appear .

To call the internal units listed in the call log, proceed as follows:

1. display the internal unit you wish to call using the ◀ ▶ keys;

   CALL BACK
   USER 002

2. press ;

   CALLING
   USER 002

U7 How to use the directory

You can use the ▼▲ keys to scroll through the list of users; to increase the scrolling speed, press and hold the key. The NAME and CODE associated with each user will be displayed in sequence.

A maximum of 1500 names may be entered (in switchboards with R.I. equal to or greater than 006) with a maximum of 16 alphanumeric characters, and each name must be assigned a code corresponding to that of the desired internal unit.

The following special characters may be entered: Ä, Å, Æ, Ö, Ü, Ø, ß, by repeatedly pressing 1.

CAUTION! To enter names, you may proceed by downloading a database from a PC using Art. 1249/A. (see "I6 - Downloard names from pc").

The manual procedure is outlined below.

U8 How to enter a name in the directory

If you wish to enter a name in the directory:

1. press ;

   ENTER NAME:
   _

2. the cursor will be positioned on the first letter.

Enter the name using the alphanumeric keypad, moving from one letter to the next using the ◀ ▶, keys, to delete a character press **CANC**;

3. press **OK** to confirm the name entry:

   ENTER
   CODE SB

4. enter the code using the alphanumeric keypad (see "addressing table");
5. to confirm code entry press **OK**;

   ENTER INDIRECT
   CODE

6. only enter the indirect code using the alphanumeric keypad **if the indirect code calling mode has been activated** (see "C8.2 - Calling mode (available from R.I.006)").
7. to confirm code entry press **OK;**
8. it will now be possible to enter a new name; alternatively press **ESC** to exit.

U9 How to find a name in the directory

If you wish to find a name in the directory:

1. press twice in quick succession;

   FIND NAME:
   _

2. enter the name, even using just part of the extension;
3. to confirm your selection, press **OK**.

If there are several users with the same initial, you can scroll through the list using the ▼▲ keys.

U10 How to delete a name in the directory

If you wish to delete a name in the directory:

1. view the name you want to delete by scrolling through the directory using the ▼▲ keys, or see "U9 How to find a name in the directory".
2. press **CANC**;

   DELETE NAME?

3. press **OK**, you will be asked to enter the password (**1998**, this password cannot be modified);

   ENTER PASSWORD
   _ _ _ _

4. to confirm deletion press **OK**;

   DELETING...

CAUTION! To delete all the names in the directory, see "I7 - All names delete".

U11 How to change a name in the directory

If you wish to change a name in the directory:

1. view the name you want to change by scrolling through the directory using the ▼▲ keys, or see "U9 How to find a name in the directory".

   JENNIFER
   CODE SB 001

2. to confirm the selected name, press :

   CHANGE
   NAME?

3. press **OK**;

   CHANGE NAME:
   JENNIFER

4. the cursor will be positioned on the first letter.
   Change the name using the alphanumeric keypad, moving from one letter to the next using the ◀ ▶ keys, to delete a character press **CANC**;

   CHANGE NAME:
   NOEMI

- ▶ to confirm the name changes, press **OK**;
- ▶ press **ESC** to exit.

» the Simplebus code for that user will be displayed, to modify it press **CANC** and enter the new number using the alphanumeric keypad:

CHANGE
SB CODE 001

- ▶ to confirm the Simplebus code change, press **OK**;
- ▶ press **ESC** to exit.
- » if present, the indirect Simplebus code for that user will be displayed, to modify it press **CANC** and enter the new number using the alphanumeric keypad:

CHANGE INDIRECT
CODE 000001

- ▶ to confirm the indirect code change, press **OK**;

STORING IN
MEMORY...

- ▶ press **ESC** to exit.

U12 How to use the lock-release

- ▶ The external unit electric lock can be controlled by pressing ⊙〰 ; if the command is carried out, some confirmation tones will be emitted.

U13 Day/night operating mode

The porter switchboard has two operating modes:

- **DAY** mode
- **NIGHT** mode

In **DAY** mode, all calls originating from the external unit are received by the switchboard, which can transfer them to the internal units as necessary.

In **NIGHT** mode, the switchboard intercepts calls from the external unit, only if they are directed to the switchboard (code 240). Calls directed to the internal units appear on the display, but are not intercepted by the switchboard.

The operating mode may be activated in 2 different ways:

- **manually**, using the DAY/NIGHT key ✶☾ .
  - ▶ Press ✶☾ to change the operating mode immediately.
  - » The operating mode is indicated on the display:
  - DAY with the symbol: (_ _)
  - NIGHT is indicated with the text **NIGHT**.

    CAUTION! NIGHT mode is only available if there is a main external unit.

- in **automatic** mode (programming performed by the installer, see **"I3 - Day/night automatic mode"**).
  The text **AUTO will only appear during operation during the DAY.** During operation in automatic mode, DAY/NIGHT modes can be switched manually (✶☾); in this case, automatic mode is excluded and reactivated at the next programmed switching time.

U14 How to activate the "Follow me" function (available from R.I.006)

This function can be used to divert calls for the switchboard to local or remote telephones.

- ▶ To activate this function, press and hold the DAY/NIGHT key ✶☾ for at least 3 sec., until the display shows:

FOLLOW ME
ACTIVE

- ▶ To disable it, repeat the procedure so that the initial screen appears on the display:

A 🔔 (_ _) 14:40
WED 12/03/10

- » Once a call has been made, the switchboard will ring until the remote device begins communicating; the call can be answered from the switchboard by cancelling the "Follow me" function.

CAUTION! To use this function, telephone switchboard Art. 2906 and interface Art. 2912 must be fitted. Contact your usual installer. Contact your usual installer.

This function can only activated for the switchboard set as secondary (see **"C8.3 - Type of switchboard (Simplebus Top mode) (available from R.I.006)"**).

U15 Alarm signalling (available from R.I.006)

The switchboard can receive alarm signals transmitted by internal units in any operating status (call or conversation).

When the switchboard receives an alarm:

- » an alarm sounds. The signal may be **silenced** by pressing any of the buttons on the switchboard.
- » the alarm signal for the first user that activated the alarm appears on the display:

ALARM (04)
USER 002

- » the signal **disappears** when the internal unit answers the switchboard call (to make the call, press 🔔), or when the switchboard operator forces a deletion process using the **CANC** key.

If several alarm situations occur simultaneously, an alarm code is created using the same methods as described in the section **"U6 How to call an internal unit listed in the call log"** and only the number of alarms recorded will appear on the display (10 max).

- » When a call is received from an external or internal unit, the switchboard exits alarm status so that the incoming call can be dealt with correctly. Once the call has been dealt with, alarm status is restored.

U16 How to activate an additional relay Art. 1256 (e.g. to activate the following independently and with a specific command: lights, CCTV alarm contacts, driveway gates, entrances without external units or other devices) (available from R.I.006)

Actuators can be activated in standby mode and during conversation with an external unit.

To activate the actuator:

- ▶ press ⊛, you will be asked to enter the code to activate a specific actuator. If there is no code a generic actuator will be activated;

ACTUATOR
CODE:

- ▶ to confirm actuator activation, press 🔔.

CAUTION! To use this function, there must be an external unit and actuators Art. 1256. Contact your usual installer.

U17 How to call a secondary switchboard from a main switchboard (available from R.I.006)

When calling a secondary switchboard, the main switchboard may use one of the 3 following methods:

- enter the switchboard number (e.g. 005 240) and press 🔔:

  USER: 005 240
  TO CALL 🔔

- scroll through the directory using the ▼▲ keys until the name is displayed and press 🔔:

  SWITCHBOARD 005
  CODE: 005 240

- press the corresponding **speed number** (see **"I4 - Recording speed number"**).

» If the call has taken place correctly:

CALLING
USER 005 240

» if the call has **not** taken place correctly:

USER 005 240
NOT AVAILABLE

» if the system is busy:

BUSY
USER

When the **switchboard handset is lifted**, communication with the main switchboard begins; the maximum duration of the conversation is 2,5 minutes;

COMMUNICATING
WITH USER 005 240

▶ to end the conversation, **hang up** the handset..



CAUTION! When the secondary switchboard and main switchboard are communicating with each other, calls cannot be transferred or put on hold.

U18 How to call a main switchboard from a secondary switchboard (available from R.I.006)

To call a main switchboard from a secondary switchboard, press (#).

» If the call has taken place correctly, you will hear 3 confirmation tones.;

When the **main switchboard handset is lifted**, communication with the secondary switchboard begins; the maximum duration of the conversation is 2,5 minutes;

CALL FOR
SWITCHBOARD

▶ to end the conversation, **hang up** the handset.



» If the **call has not taken place correctly**, if the **system is busy** or if the **main switchboard does not exist**, the display shows:

FUNCTION
NOT AVAILABLE

and

SPEAKER LINE
TEST OK

SPEAKER LINE
TEST KO

CAUTION! When the secondary switchboard and main switchboard are communicating with each other, calls cannot be transferred or put on hold.

U19 How to answer a call from the secondary switchboard to the main switchboard (available from R.I.006)

When the main switchboard receives a call from the secondary switchboard:

» the NAME of the secondary switchboard making the call (if listed in the directory, see **"U8 How to enter a name in the directory"**) or the address of the switchboard making the call (e.g. 005 240) is displayed.

CALLED FROM
USER 005 240

005= indicates the "zone"

240= indicates the general switchboard ID

▶ to **reject** the call, press **CANC**;

▶ to **answer** the call coming from the secondary switchboard, lift the handset;



» the main switchboard begins communicating with the secondary switchboard, the maximum duration of the conversation is 2,5 minutes;

COMMUNICATING
WITH USER 005 240

▶ to end the conversation, **hang up** the handset..



CAUTION! If the switchboard is busy or the switchboard operator is momentarily absent and cannot answer within 30 seconds, the call will be added to the log (see **"U6 How to call an internal unit listed in the call log"**).

U20 How to answer a call from the main switchboard to the secondary switchboard (available from R.I.006)

When the secondary switchboard receives a call from the main switchboard:

CALL FOR
SWITCHBOARD

» to **answer** the call coming from the main switchboard, lift the handset;



▶ to end the conversation, **hang up** the handset.



U21 How to activate (MASTER) or deactivate (SLAVE) the main switchboards (available from R.I.006)

When using 2 main switchboards configured in series, use one of the following methods:

- press the **A/V** key on the active switchboard (MASTER), the following screen will appear:

  ```
  * 1- MASTER
    2 - SLAVE
  ```

  ▶ press **2** to deactivate it (SLAVE). The switchboard will switch off, while the other switchboard will switch on automatically to become the MASTER.

or

- press **ON/OFF** on the deactivated switchboard (SLAVE) to switch it on.

  ▶ press the **A/V** key and the following screen will appear:

  ```
  * 1- MASTER
    2 - SLAVE
  ```

  ▶ press **1** to confirm that you wish to activate the switchboard (MASTER).

  ▶ press **ESC** repeatedly to return to the main screen.

The other switchboard will be deactivated automatically, to become the SLAVE.

Settings

This section is aimed at qualified technicians who, after installing the product, will program the porter switchboard using guided menus, which can be viewed on the display by navigating the main menu. The user can apply these functions to change some of the switchboard settings (e.g.: language, date/time, delete all names in the directory, etc.).

Menu 1-7 screens tree diagram		
1- CHANGE TIME	SET TIME 00:00	
2- CHANGE DATE	SET DATE 00/00/00	
3- DAY/NIGHT AUTOMATIC	1- ON/OFF	SERVICE ACTIVE SERVICE NON ACTIVE
	2- SET TIMES	TIME 01: 00:00 TIME 02: 00:00 TIME 03: 00:00 TIME 04: 00:00
	3- WEEK PROGRAM	MONDAY MODE: DAY
4- RECORDING SPEED NUMBER	SPEED NUMBER XX CODE: XXX	
5 - CHANGE LANGUAGE	*1 - ITALIAN 2 - ENGLISH 3 - FRENCH 4 - GERMAN 5 - PORTUGUESE 6 - DANISH 7 - FINNISH 8 - DUTCH 9 - SPANISH	
6- DOWNLOAD NAMES FROM PC	SERVICE ACTIVE	
7- ALL NAMES DELETED	DELETE NAMES IN DIRECTORY?	ENTER PASSWORD: _ _ _ _

I1 - Change time

1. press the **MENU** key and the **1-CHANGE TIME** key:

   1-CHANGE TIME
   2-CHANGE DATE

2. the cursor will be positioned on the first digit. Enter the time using the alphanumeric keypad, moving the cursor using the ◀ ▶ keys;

   SET TIME
   00:00

3. press **OK** to confirm;

▶ press **ESC** to return to the main screen.

I2 - Change date

1. press the **MENU** key and the **2-CHANGE DATE** key;

   1-CHANGE TIME
   2-CHANGE DATE

2. the cursor will be positioned on the first digit. Enter the date using the alphanumeric keypad, moving the cursor using the ◀ ▶ keys;

   SET DATE
   00/00/00

3. press **OK** to confirm;
4. press ▼, until the desired day appears on the display;

   ENTER DAY:
   MON

5. press **OK** to confirm;

▶ press **ESC** to return to the main screen.

I3 - Day/night automatic mode

You can decide to organise the week by selecting one of these three operating modes for each day:

- **AUTO**: the system passes from DAY mode to NIGHT mode at the programmed times.
  It is not possible to decide on different time bands for days during which the system operates in AUTO mode.
- **NIGHT**: the system is in this mode for the whole day.
- **DAY**: the system is in this mode for the whole day.

The system can be set to allow automatic passage from DAY mode to NIGHT mode at specific times which can be programmed by the user. A MAXIMUM of 4 TIMES can be set.

It is extremely important to set the times for switching from one mode to another correctly.

TIME 1: determines the first mode switch: from NIGHT mode to DAY mode

TIME 2: determines the second mode switch: from DAY mode to NIGHT mode

TIME 3: determines the third mode switch: from NIGHT mode to DAY mode

TIME 4: determines the fourth mode switch: from DAY mode to NIGHT mode.

All 4 TIMES must always be set (as shown in the following example) even though only 2 switchovers are needed.

Example:

You want to configure the switchboard with the following parameters:

07:00 – 12:00 Day mode operation

13:00 – 22:00 Day mode operation

TIME 1: 07:00 » NIGHT / DAY
TIME 2: 12:00 » DAY / NIGHT
TIME 3: 13:00 » NIGHT / DAY
TIME 4: 22:00 » DAY / NIGHT

I3.1 - Activation/deactivation

1. press the MENU key and use the ▼▲ keys to view the **3-DAY/NIGHT AUTOMATIC** menu, then press **3**;

   3-DAY/NIGHT AUTOMATIC

2. press the **1-ON/OFF,** key to activate or deactivate the function;

   1-ON/OFF
   2-SET TIMES

   SERVICE
   ACTIVE

   SERVICE
   NON ACTIVE

3. press **ESC** to return to the main screen.

I3.2 - Set times in auto mode

1. press the **MENU** key and use the ▼▲ keys to view the **3-DAY/NIGHT AUTOMATIC** menu, then press **3;**

   3-DAY/NIGHT
   AUTOMATIC

2. press the **2-SET TIME** key;

   1-ON/OFF
   2-SET TIMES

3. 00:00 is the default time, the cursor will be positioned on the first digit. Enter the time using the alphanumeric keypad, moving the cursor using the keys ◀ ▶;

   TIME 1:
   00:00

4. to confirm and move on to the next time, press **OK** and repeat the procedure for all 4 times;

   TIME 2:
   00:00

5. press **ESC** repeatedly to return to the main screen.

I3.3 - Weekly programming

1. press the **MENU** key and use the ▼▲ keys to view the **3-DAY/NIGHT AUTOMATIC** menu, then press **3**;

   3-DAY/NIGHT
   AUTOMATIC

2. use the ▼ key to view the **3-WEEK PROGRAM** menu, then press **3**;

   3-WEEK
   PROGRAM

3. press ▼ to select one of the 3 operating modes (MODES: AUTO- DAY- NIGHT)

MONDAY
MODE: AUTO

MONDAY
MODE: DAY

MONDAY
MODE: NIGHT

4. to confirm and move on to the next day, press **OK** and repeat the procedure for all days of the week;
5. press **OK** to confirm;
6. press **ESC** repeatedly to return to the main screen.
7. **CAUTION! The days programmed to operate in AUTO mode will all have the same time bands** set as listed in the section **"I3.2 - Set times in auto mode"**.

I4 - Recording speed number

Speed numbers can be used to call an internal extension directly by pressing the key associated with the user address.

To store a speed number in the memory:

1. press the **MENU** key and use the ▼▲ keys to view the **4-RECORDING SPEED NUMBER** menu, then press **4**:

   4-RECORDING
   SPEED NUMBER

2. enter the code using the alphanumeric keypad (default code 000):

   SPEED NUMBER 01
   CODE: 000

NOTE. The CODE arrangement will be as follows:

- CODE (max. 3 digits): **000** for the Simplebus system
- CODE (max. 3+3 digits): --- --- for the Simplebus TOP system
- CODE (max. 6 digits): ------ for the Simplebus and Simplebus TOP system with INDIRECT CODE

▶ To move on to the next speed number, press **OK** and repeat the procedure;

▶ press **ESC** to return to the main screen.

I5 - Change language

The switchboard language can be selected from the following list:

* **1- Italian (default)**
2- English
3- French
4- German
5- Portuguese
6- Danish
7- Finnish
8- Dutch
9- Spanish

1. press the **MENU** key and use the ▼▲ keys to view the **5-CHANGE LANGUAGE** menu, then press **5**;

   5-CHANGE
   LANGUAGE

2. use the ▼▲ keys to display the selected language and press the corresponding button (e.g. **2** for English);

   1-ITALIAN
   *2-ENGLISH

3. press **ESC** repeatedly to return to the main screen.

I6 - Downloard names from pc

You can enter names in the memory by downloading them from a PC using Art. 1249/A. To perform this operation, activate the download function from the menu, connect the switchboard to the PC via the relevant serial cable, and start running the download software.

CAUTION! ONLY ACTIVATE THE FUNCTION WHEN YOU WANT TO DOWNLOAD NAMES FROM A PC. THE FUNCTION REMAINS ACTIVE FOR 1 MINUTE.

1. press the **MENU** key and use the ▼▲ keys to display the **6-DOWNLOAD NAMES FROM PC menu**;

   6-DOWNLOAD
   NAMES FROM PC

2. press **6** to activate the function:

   SERVICE
   ACTIVE

   From R.I. 006, downloading of names can ONLY take place when the DIRECTORY is EMPTY.

3. press **ESC** to return to the main screen, on which the text "**!PC**" will be displayed (for 1 minute); you may now start downloading names using Art. 1249/A, during this process the switchboard cannot make or receive calls; the service is automatically deactivated on completion of the download.

I7 - All names delete

To delete names in the directory:

1. press the **MENU** key and use the ▼▲ keys to display the **7-ALL NAMES DELETED** menu, then press **7**;

   7-ALL NAMES
   DELETED

2. you will be asked if you want to delete the names in the directory;

   DELETE NAMES
   IN DIRECTORY?

3. to confirm, press **OK** and enter the confirmation password (**1998**);

   ENTER PASSWORD:
   ****

4. press **OK** to confirm;

   DELETING
   ...

» *once the information has been deleted, the main screen will be displayed.*

Configurations

Menu 8 screens tree diagram				
8 - ADVANCED OPTIONS	1 - VIDEO MODE CONFIGURATION	SERVICE ACTIVE SERVICE NON ACTIVE (default)	*1 - NORMAL MODE 2 - DIRECT MODE	
	2- CALLING MODE	*1 - SB CODE		
		2 - INDIRECT CODE		
		3 - INDIRECT CODE WITHOUT NAME	*1 - FILTER OFF 2 - FILTER ON	
	3- TYPE OF SWITCHBOARD	*1 - SECONDARY	*1 - SINGLE CPS	
			2 - PARALLEL CPS	(function not available)
			3 - SERIES CPS	1 - MASTER *2 - SLAVE
		2 - MAIN (SIMPLEBUS TOP mode)	*1 - SINGLE CPS	
			2 - PARALLEL CPS	1 - LS-IN *2 - LP-IN
			3 - SERIES CPS	1 - MASTER *2 - SLAVE
	4- SELF-IGNITION ON/OFF	SERVICE ACTIVE SERVICE NON ACTIVE (default)		
	5- TRIPLE CALL ON/OFF	SERVICE ACTIVE SERVICE NON ACTIVE (default)		
	6- FUNCTION CH-CH CONTACT	*1 - CALL REPLY	CONTACT TIME: 1 SEC CONTACT TIME: 3 SEC CONTACT TIME: 5 SEC	
		2 - EXT. MONITOR		
	7- FUNCTION MAIN CPS+SEC	SERVICE ACTIVE SERVICE NON ACTIVE (default)		

C8.1 - Video mode configuration (available from R.I.006)

This is disabled by default.

Activating this function will allow you to make a video call to an internal unit. The monitor called by the switchboard will switch on, making it possible to view, for example, the images from the remote cameras connected to Art. 1259/A or Art. 1259C.

VIDEO mode can be **NORMAL** or **DIRECT**.

In **NORMAL** mode, the internal unit video feed begins when the handset is lifted, or when the audio line is activated in receipt of a call from the switchboard; in **DIRECT** mode, on the other hand, it begins automatically on receipt of a call.

To activate the function:

1. press the **MENU** key and use the ▼▲ keys to view the **8-ADVANCED OPTIONS** menu, then press **8**;

   8-ADVANCED OPTIONS

   1-VIDEO MODE CONFIGURATION

2. press **1** to activate or deactivate the function;

   SERVICE ACTIVE

   SERVICE NON ACTIVE

» if the service has been activated, you will be asked to select one of the 2 modes.

▶ Press **1** for **NORMAL MODE** or **2** for **DIRECT MODE**;

*1- NORMAL MODE
2- DIRECT MODE

C8.2 - Calling mode (available from R.I.006)

This function can be used to select the manual switchboard calling mode, from the 3 options available:

1- SIMPLEBUS CODE (default), the call is made by entering the code corresponding to each user.

- If the system is a Simplebus type, the door-entry phone user is identified by a User Name field (optional) and a Code field no longer than 3 digits (between 1 and 240).
  EXAMPLE: User name = Smith; Code = 015.
- If the system is a Simplebus TOP type, the door-entry phone user is identified by the User Name field (optional) and a Code field consisting of two parts: zone field with no more than 3 digits (between 1 and 500) and a user field which must have 3 digits (between 1 and 249).
  EXAMPLE: User name = Smith; Code = 25 015.

2- INDIRECT CODE, (the call takes place by entering the indirect code with 6 digits. This code must be stored in the memory and associated with the user who has been given a name (compulsory) and Simplebus or Simplebus TOP code).

3- INDIRECT CODE WITHOUT NAME, see previous mode; the difference is that in this case the name field is not compulsory. In this mode, **FILTER OFF** or **FILTER ON** will be requested; if activated only named users will appear on the display; however, if the filter is deactivated, all users will be displayed.

To activate the function:

1. press the **MENU** key and use the ▼▲ keys to view the **8-ADVANCED OPTIONS** menu, then press **8**;

   8-ADVANCED OPTIONS

2. use ▼ to view the **2-CALLING MODE** menu, then press **2**;

   2-CALLING MODE

3. view the selected mode using the ▼▲, keys, then press **1** for the **SIMPLEBUS CODE**, press **2** for the **INDIRECT CODE** or 3 for the **INDIRECT CODE WITHOUT NAME**;

   *1-SB CODE
   2-INDIRECT CODE

   3-INDIRECT CODE WITHOUT NAME

   if the **3-DIRECT CODE WITHOUT NAME** is selected, filter activation is requested; press **1** to disable it, or **2** to activate it;

   *1-FILTER OFF
   2-FILTER ON

C8.3 - Type of switchboard (Simplebus Top mode) (available from R.I.006)

The switchboard may be SECONDARY or MAIN.

- Set **SECONDARY** when the switchboard is used as SECONDARY, on the outgoing line from the LM-LM terminals of switching device Art. 1424 (Simplebus TOP system) (see **SBTOP audio/video system**); or when the switchboard is used as MAIN, in Simplebus systems with switching devices Art. 1224A or in a system with a single riser and no switching devices. **CAUTION!** The SECONDARY switchboard cannot be configured as a switchboard in PARALLEL.
- Set **MAIN** when the switchboard is used as MAIN in **SIMPLEBUS TOP** systems, then positioned in the first section before the switching devices Art. 1424 which mark out the zones/risers (see **SBTOP audio/video system**).

The SECONDARY or MAIN switchboard must then be configured as:

1- SINGLE
2- PARALLEL
3- SERIES.

1. Select **SINGLE** when the switchboard is the only one in the system, or the only one serving a specific riser.

2. If there are 2 main or secondary control units serving the same riser, the **PARALLEL** configuration implies that both switchboards will be operative with the same functions (see **SBTOP audio/video system**).

   » The first of the two to answer a call will preclude the possibility of the other one performing the same procedure.

   » If one of the 2 devices is switched on or off, the other will automatically follow suit.

   ▶ Configure both switchboards as PARALLEL and set the switchboard connected underneath the LS-LS line of the switching device Art. 1424 as **LS-IN**;set the

device positioned underneath the LPin-LPin line of switching device Art. 1424 as **LP-IN**.
For the PARALLEL switchboard, switching to NIGHT and the DAY/NIGHT AUTOMATIC function is not possible (see **"I3 - Day/night automatic mode"**).
A **P** should appear on the standby screen of the two switchboards, indicating that the switchboard is configured in parallel, in addition to the fixed icon ↯.

3- If there are 2 main or secondary switchboards serving the same riser, the SERIES configuration implies that only 1 of the 2 can be operative (MASTER switchboard), while the other is deactivated (SLAVE switchboard) (see **SBTOP audio/video system**).

- ▶ Configure both switchboards as SERIES and the active switchboard will, from time to time, be the one set as MASTER. To change a switchboard from MASTER to SLAVE and vice-versa, see "U21 How to ACTIVATE (MASTER) or DEACTIVATE (SLAVE) the main switchboards" page 13.
  An **S** should appear on the standby screen of the two switchboards, indicating that the switchboard is configured in series, in addition to the fixed icon ↯ .

CAUTION!

- » *if ↯ flashes, it is indicating that the 2 switchboards are not communicating correctly.*
- » *if the icon ! appears, there is a configuration problem with the 2 switchboards* (e.g. both set as MASTER or SLAVE, LP-IN or LS-IN, or one is SERIES and the other PARALLEL).
- » *If, in a Simplebus TOP system (with switching devices Art. 1424), both main and secondary switchboards are installed* (see **SBTOP audio/video system**); for correct system operation, it will be necessary to activate - on all switchboards - the setting **"C8.7 - Function main cps+sec (available from R.I.006)"**.

How to configure a main switchboard

1. press the **MENU** key and use the ▼▲ keys to view the **8-ADVANCED OPTIONS** menu, then press **8**;

   8-ADVANCED OPTIONS

2. use the ▼▲ keys to display the **3-TYPE OF SWITCHBOARD** menu, then press **3**;

   3- TYPE OF SWITCHBOARD

3. press **2**;

   1- SECONDARY
   *2- MAIN

The switchboard is configured as SINGLE CPS by default.

It is now possible to configure it as PARALLEL CPS or SERIES CPS.

- ▶ to configure it as **2-PARALLEL CPS**, press **2**;

  1-SINGLE CPS
  *2- PARALLEL CPS

- ▶ to configure it as **LS-LN**, press **1**,
  to configure it as **LP-LN**, press **2**;

  1- LS-IN
  2- LP-IN

- ▶ to configure it as SERIES CPS, use the ▼▲ keys to display the **3-SERIES CPS** menu, then press **3**;

  *3- SERIES CPS

- ▶ to configure it as **MASTER**, press **1**,
  to configure it as **SLAVE**, press **2**;

  1- MASTER
  2- SLAVE

How to configure a secondarya switchboard

1. press the **MENU** key and use the ▼▲ keys to view the **8-ADVANCED OPTIONS** menu, then press **8**:

   8-ADVANCED OPTIONS

2. use the ▼▲ keys to display the **3-TYPE OF SWITCHBOARD** menu, then press **3**;

   3- TYPE OF SWITCHBOARD

3. Press key **1**;

   *1- SECONDARY
   2- MAIN

The switchboard is configured as SINGLE CPS by default.

It is now possible to configure it as SERIES CPS, in fact **the function 2-PARALLEL CPS IS NOT AVAILABLE;**

*1- SINGLE CPS
2- PARALLEL CPS

- ▶ to configure it as SERIES CPS, use the ▼▲ keys to display the **3-SERIES CPS** menu, then press **3**;

  *3- SERIES CPS

- ▶ to configure it as **MASTER**, press **1**; to configure it as **SLAVE**, press **2**;

  1- MASTER
  2- SLAVE

C8.4 - Self-ignition on/off (available from R.I.006)

This is disabled by default.

This function is only available for non-TOP Simplebus systems and requires Art. 1259 for the cyclic displaying of images from remote cameras.

This function can be used to activate or deactivate the self-ignition transmitted by the internal units with the switchboard in DAY mode.

To activate the function:

1. press the **MENU** key and use the ▼▲ keys to view the **8-ADVANCED OPTIONS** menu, then press **8**;

   8-ADVANCED OPTIONS

2. use the ▼▲ keys to view the **4 SELF-IGNITION ON/OFF** menu;

   4-AUTO ACC.
   INTERNA ON/OFF

3. press **4** to activate or deactivate the function;

   SERVICE
   ACTIVE

   SERVICE
   NON ACTIVE

C8.5 - Triple call on/off (available from R.I.006)

This is disabled by default.

This function can be used to activate or deactivate the triple call made by the switchboard to the internal units.

The call will therefore take place on 3 consecutive occasions (in the case of video calls: the first 2 will be audio calls and the third will be a video call).

To activate the function:

1. press the **MENU** key and use the ▼▲ keys to view the **8-ADVANCED OPTIONS** menu, then press **8**;

   8-ADVANCED OPTIONS

2. use the ▼▲ keys to display the **5-TRIPLE CALL ON/OFF** menu;

   5-TRIPLE CALL ON/OFF

3. press **5** to activate or deactivate the function;

   SERVICE ACTIVE

   SERVICE NON ACTIVE

C8.6 - Function CH-CH contact (available from R.I.006)

This function can be used to assign a function to the CH-CH contact; **by default** the active function is **call repetition** and it is possible to select a contact time (closure) of either 1, 3 or 5 seconds.

Alternatively, the **parallel or external monitor function can be activated**; the contact will close for the entire duration of a VIDEO call from the external unit.

To activate the function:

1. press the **MENU** key and use the ▼▲ keys to view the **8-ADVANCED OPTIONS** menu, then press **8**;

   8-ADVANCED OPTIONS

2. use the ▼▲ keys to display the **6-FUNCTION CH-CH CONTACT** menu, then press **6**;

   6-FUNCTION CH-CH CONTACT

3. press **1** for the **CALL REPLY** function or **2** for the **EXTERNAL MONITOR** function**;**

   1-CALL REPLY
   2- EXT. MONITOR

» **if key 1** has been selected, the **CONTACT TIME** (closure) will be requested; use keys ▼▲ to display the selected time (1, 3 or 5 sec.);

   CONTACT TIME: 1 SEC

   CONTACT TIME: 3 SEC

C8.7 - Function main cps+sec (available from R.I.006)

This is disabled by default.

CAUTION!

1. This function **must remain disabled** to prevent malfunctioning when using switchboards, brackets, door-entry phones, switching devices and mixers with R.I. lower than the values indicated in the table below.
2. This function **must be activated** on all switchboards for the correct operation of Simplebus TOP systems (with switching devices Art. 1424) which use both main and secondary switchboards.

To activate the function:

1. press the **MENU** key and use the ▼▲ keys to view the **8-ADVANCED OPTIONS** menu, then press **8**;

   8-ADVANCED OPTIONS

2. use the ▼▲ keys to view the **7- FUNCTION MAIN CPS+SEC** menu;

   7- FUNCTION MAIN CPS + SEC

3. press **7** to activate or deactivate the function;

   SERVICE ACTIVE

   SERVICE NON ACTIVE

System performance and layouts

For further information of system performance and to view installation layouts, click on the system type that best meets your requirements:

- **SBTOP audio/video system** for the creation of audio-video systems for *residential complexes.*
- **SB1 audio system** for the creation of audio systems for *residential complexes.*

Table of contents

Warning

Description 613
- **Programming keys and display 614**
- **Alphanumeric keypad 614**
- **General description 615**

Technical features 615

Connection 616

Use 617
- U1 How to answer a call from an internal unit 617
- U2 How to answer a call from an external unit 617
- U3 How to call an internal unit 618
- U4 How to transfer a call from the external unit to an internal unit 618
- U5 How to set up communication between 2 internal units (intercom function) 619
- U6 How to call an internal unit listed in the received calls log 619
- U7 How to call a secondary switchboard from a main switchboard 620
- U8 How to call a main switchboard from a secondary switchboard 620
- U9 How to answer a call made from the secondary switchboard to the main switchboard 621
- U10 How to answer a call made from the main switchboard to the secondary switchboard 621
- U11 How to activate or deactivate the main switchboards 621
- U12 How to use the lock-release 622
- U13 How to activate the “Follow Me” function (FollowMe) 622
- U14 How to activate an additional relay (e.g. to activate independently using a specific command: lights, CCTV alarm contacts, vehicle barriers, entrances without an external unit or other devices) 622
- U15 How to use the directory 623
- U16 How to find a name in the directory 623
- U17 How to enter a name in the directory 623
- U18 How to delete a name in the directory 624
- U19 How to edit a name in the directory 624
- U20 Delete directory 625
- U21 Directory info 625
- U22 Record speed numbers 625
- U23 - View received calls 626
- U24 - Delete received calls list 627
- U25 - View alarms 627
- U26 - Delete alarms received list 627

Settings 628
- I1 - Change language 629
- I2 - Video settings 629
- I3 - Audio settings 629
- I4 - Tone settings 630
- I5 - Change date 630
- I6 - Change time 630
- I7 - Set skin 631
- I8 - Adjust timers 631
- I9 - Set daily mode 631
- I10 - Set automatic switching 632
- I11 - Reset settings 633

Installer configurations 634
- INSTALLER CONFIGURATIONS 634
- C1 - Type of switchboard (Simplebus Top mode) 634
- C2 - How to configure a main or secondary switchboard 635
- C3 - How to configure a switchboard as single, parallel or series . 635
- C4 - Call via Simplebus or indirect code 635
- C5 - Backwards compatibility 636
- C6 - Audio or video call 636
- C7- Configure services 637

Prestazioni di impianto e schemi 637

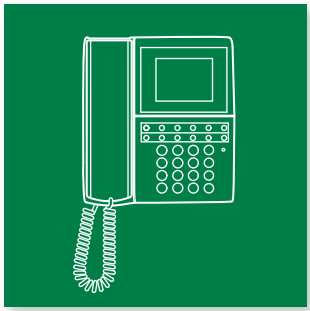

Porter switchboard Art. 1998VC

Description

The porter switchboard in its desk version with alphanumeric digital keypad and 3.5” colour display, for viewing visitors and controlling entrances. Allows the code and name of the called and calling users to be displayed, keeping unanswered calls stored in the memory. Day/Night mode and user/user intercom service. Allows call addressing for up to 120000 users. It allows call transmission with indirect codes, management of alarm indications originating from users. Can be used as a main or secondary switchboard. Up to 4000 names can be stored. Equipped with USB port, special PC SW for downloading names and bushing for connection to the disconnectable system via RJ cable. Compatible with all SBTOP functions and products.

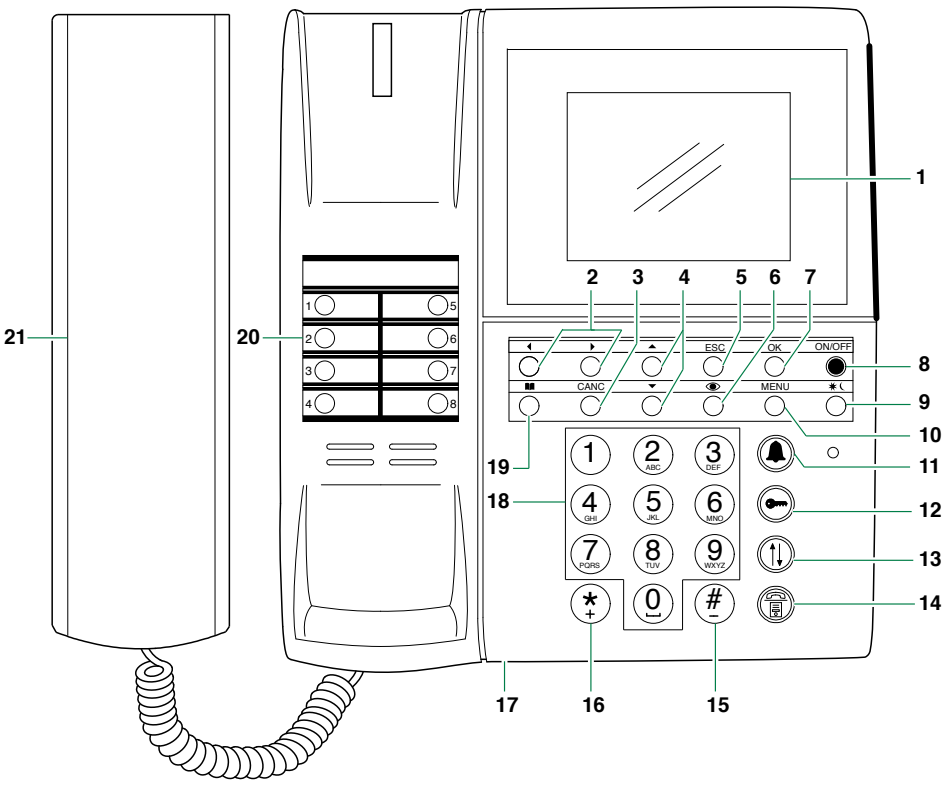

1. Message indication display
2. ◀▶ Menu option navigation keys
3. **CANC** Key used to cancel a call or delete entered data
4. ▼▲ Menu navigation keys
5. **ESC** Exit menu key
6. Key activating self-ignition
7. **OK** Confirm key
8. **ON/OFF** Power on/off (press and hold for 2 seconds)
9. Key activating DAY or NIGHT mode
10. **MENU** key
11. Call key
12. Lock-release key
13. Follow Me key
14. Call hold key
15. Key for calling the Simplebus Top switchboard from the Simplebus switchboard
16. Key used to activate an additional relay
17. Wheel for call volume adjustment
18. Alphanumeric keypad
19. Directory key
20. [1] Speed numbers
21. Handset

Do not press and hold the audio hook while the handset is lifted

Description of terminal block:

C NO Normally open contact for “FOLLOW ME” function

24 ~ 24 V AC power supply

0 ~ 0 V AC power supply

Earthing

OUT OUT CNO output for remote camera control

CH CH Free contact for “call repeat” or “enable external monitor”

LM LM Data line to risers

LP1 LP2 Incoming data line from external unit

GND TX RX RS232 serial port for connection to the remote switchboard in systems with multiple switchboards in series or in parallel.

Programming keys and display

MENU To enter the programming menus

▼▲ Can be used to select the various menu options

◀ ▶ Can be used to move the cursor in order to change the entered data

OK Confirm the displayed information or data entered

CANC Delete the data entered

ESC Cancelling the selected option and exiting the programming menu

Switchboard display screens:

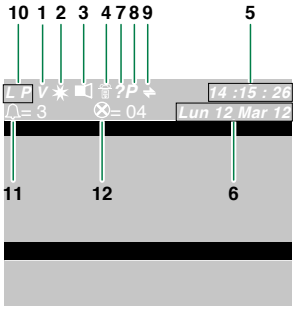

1. **A** AUDIO mode
   V VIDEO mode
2. ✷ DAY mode
   ☾ NIGHT mode
3. 🔊 indicates audio active
4. ☎ indicates “FollowMe” function active
5. time (hours:minutes:seconds)
6. day (Mon, Tue, etc.) and date (day/month/year)
7. **!** the 2 switchboards configured are NOT compatible
   ? the switchboard has not yet detected the presence of the remote switchboard
8. **P** indicates that the switchboard is configured in parallel
   S indicates that the switchboard is configured in series
9. ➧ fixed indicates correct operation of the serial line
   ➧ flashing indicates malfunctioning of the serial line
10. **LM flashing** indicates a short circuit on the riser line, the text is accompanied by a tone which sounds repeatedly. The switchboard rejects any attempts to call or transfer calls to internal units; however, all incoming calls from the external unit will be dealt with normally.
    LP flashing indicates that the external unit is not connected
11. 🔔=5 flashing indicates the number of unanswered calls in DAY and NIGHT mode
12. ⊗=1 flashing indicates the number of alarms received and not implemented

Alphanumeric keypad

For several of the functions, the keypad can be used to enter both numbers and letters; this can be done by pressing the same button several times, for example if you press key 2 several times, a, b, c, A – B - C - 2 will appear in succession.

① key for entering symbols .,;:?!()

key for entering a dash

* key for entering the + symbol

⓪ key for entering a space between characters

OK Confirms the data entered

CANC Deletes the data entered

General description

The main functions of the switchboard are as follows:

- call an internal unit
- receive calls from external units and transfer them to internal units as necessary
- receive routine or alarm calls from the internal units
- control external unit electric locks
- activate a relay

The porter switchboard also offers:

- DAY/NIGHT operation, which can only be used to enable switchboard functions in specific time bands programmed by the user;
- a CALL LOG, in which the calls from internal units which could not be answered are stored;
- a DIRECTORY which can be programmed so as to identify the caller easily.

Technical features

MAIN FEATURES	
Height (mm)	130
Width (mm)	200
Depth (mm)	223
Operating temperature (°C)	-5 ÷40
Maximum current absorption (mA)	200
SOFTWARE/FIRMWARE SPECIFICATIONS	
Number of user codes	4000
No. of storable users	4000
FUNCTIONS	
Alarm function	Yes
Actuator control function	Yes
Intercom function	Yes
Key button function	Yes
GENERAL DATA	
Colour	Grey
COMPATIBILITY	
Simplebus Top audio/video system	Yes
MOUNTING/INSTALLATION	
Wall-mounted	Yes
Desk base-mounted	Yes
AUDIO/VIDEO FEATURES	
Display resolution (HxV - pixel)	320x240 pixel
CONNECTIVITY	
Type of connections/ports	RS232, USB
RS232 ports	1

Connection

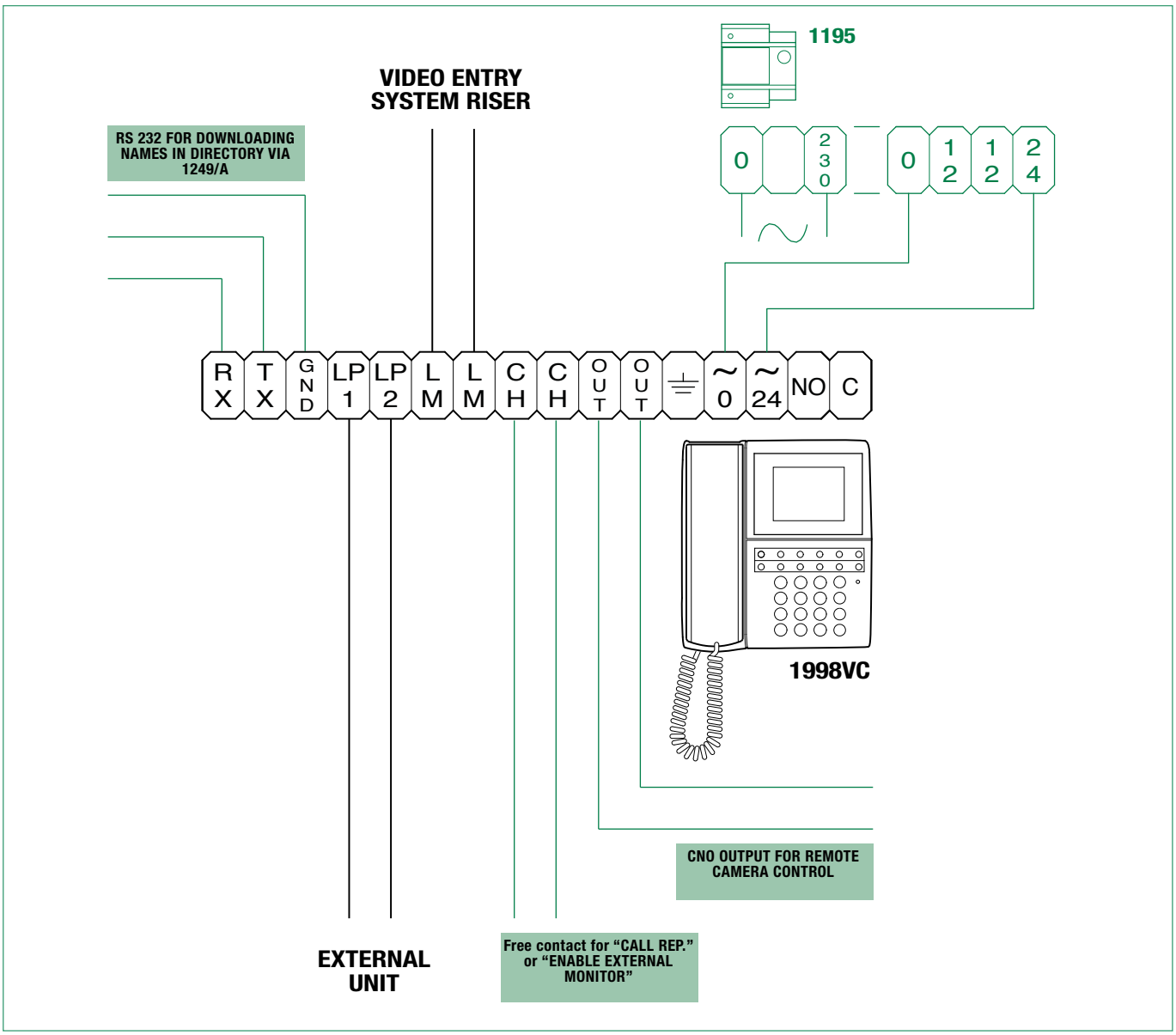
1195
VIDEO ENTRY SYSTEM RISER
RS 232 FOR DOWNLOADING NAMES IN DIRECTORY VIA 1249/A
0
2 3 0
0
1 2
1 2
2 4
RX
TX
GND
LP 1
LP 2
L M
L M
CH
CH
OUT
OUT
~ 0
~ 24
NO
C
1998VC
CNO OUTPUT FOR REMOTE CAMERA CONTROL
EXTERNAL UNIT
Free contact for "CALL REP." or "ENABLE EXTERNAL MONITOR"

Use

The following functions are the main features of the switchboard and its operating mode, which can all be accessed directly without using the menus.

U1 How to answer a call from an internal unit

When the switchboard receives a call from an internal unit:

» *the name of the internal unit from which the call is being made, if it is listed in the directory (see "U17 How to enter a name in the directory") or the address making the call (e.g. 002) is displayed.*

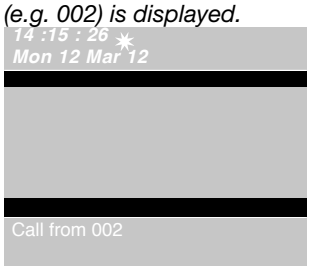

▶ to **answer** the call originating from the internal unit, lift the handset within 30 seconds;

» *the switchboard communicates with the internal unit, with a maximum conversation time equal to the audio time set on the main switchboard (MENU/Settings/ Timers/Audio - min. 10 seconds, max. 90 seconds).*

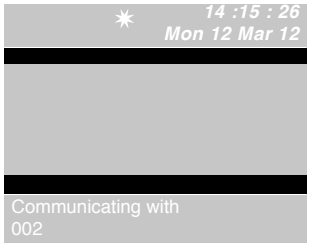

▶ to end the conversation, **hang up** the handset.

▶ to **reject** the call, press **CANC**.

CAUTION!

If the switchboard is busy or the switchboard operator is momentarily absent and cannot answer within 30 seconds, the call will be added to the received call log (see "U6 How to call an internal unit listed in the received calls log")

U2 How to answer a call from an external unit

The switchboard must be in DAY mode, in NIGHT mode it will only answer direct switchboard calls.

The switchboard can receive a call from an external unit:

- addressed directly to an internal unit, in which case the NAME of the called unit (if a name in the directory has been assigned to the called code, see "U17 How to enter a name in the directory") or the address of the called unit (e.g. 002) is displayed.

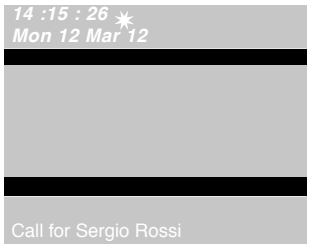

- or addressed directly to the switchboard (address=240)

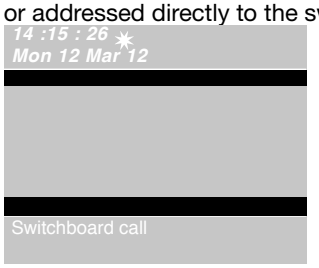

▶ to **answer** the call coming from the external unit, lift the handset;

» *the switchboard communicates with outside;*

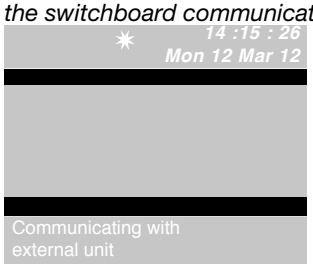

▶ press key A if necessary, to activate external unit electric lock; if the lock-release takes place, a confirmation tone sounds;



▶ to end the conversation, hang up the handset.

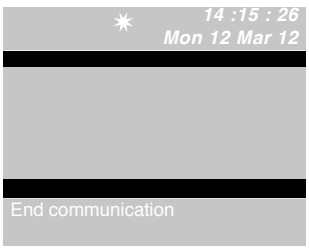

▶ to **reject** the call, press **CANC**.

In NIGHT mode (see "I9 - Set daily mode") calls from the external unit addressed to an internal unit appear on the display, but cannot be intercepted from the switchboard.

U3 How to call an internal unit

The switchboard can use 3 different methods to call an internal unit:

- *The number entered depends on the switchboard configuration, see **"C4 - Call via Simplebus or indirect code"**; contact your regular installer.

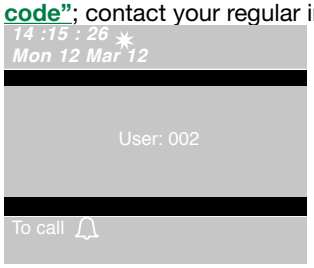

- press 🕮 and scroll through the directory using the ▼▲ keys until the desired name is displayed and press 🔔.



- press the corresponding speed number (e.g.[1]◯ speed number 1= stored code "002", see **"U22 Record speed numbers"**).

» *if the call has taken place correctly:*

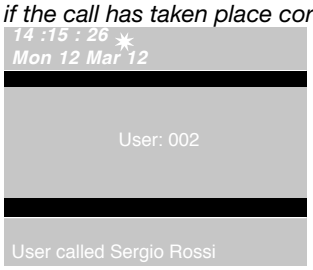

» *if the call has not taken place correctly:*

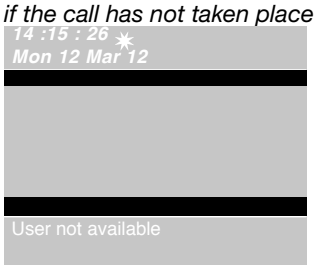

» *if the internal unit is busy:*

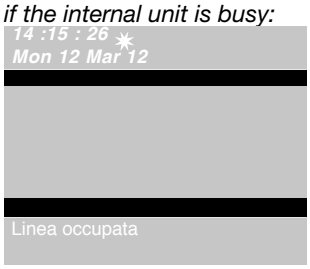

When the internal unit called enters audio mode, it communicates with the switchboard, the maximum duration of the conversation is equal to the audio time set on the main switchboard (**MENU/Settings/Timers/Audio** - min. 10 seconds, max. 90 seconds).

U4 How to transfer a call from the external unit to an internal unit

When the switchboard receives a call from an external unit, directed to an internal unit:

» *the NAME of the call recipient appears (if a name has been assigned to the corresponding code in the directory, see **"U17 How to enter a name in the directory"**).*

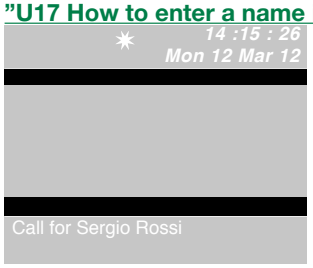

▶ to **answer** the call originating from the external unit, lift the handset within 60 seconds;



» *the switchboard begins communicating with the external unit, the maximum duration of the conversation is 90 seconds;*

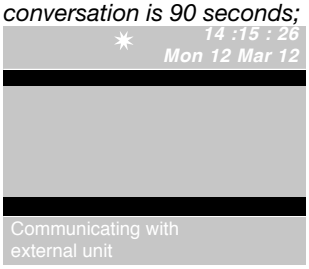

▶ press 🕾 to put the external unit on hold;

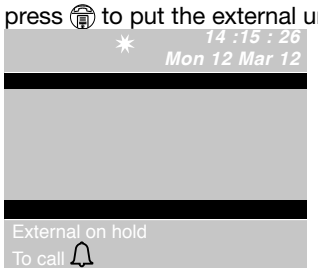

» *If the internal unit **does not accept** the transferred conversation, the external unit remains on hold; end the conversation with the internal unit and press the 🕾 key to re-establish communication with the external unit;*

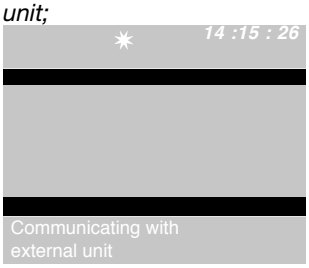

▶ to end the conversation, **hang up** the handset.



U5 How to set up communication between 2 internal units (intercom function)

When the switchboard is communicating with an internal unit (e.g. 002) which is trying to speak with another internal unit (e.g. 003):

1. put the internal unit which is already connected (e.g. 002) on hold by pressing ;
2. call the desired internal unit (e.g. 003, see **"U3 How to call an internal unit"**);

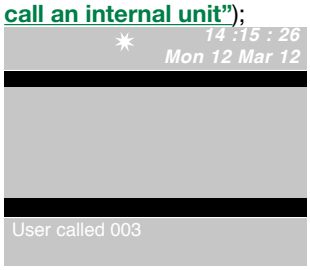

» When the **internal unit receiving the call is connected to the audio line**, it begins communicating with the switchboard;

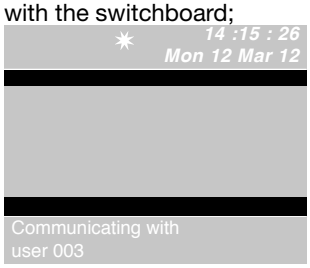

3. To transfer the conversation to the other internal unit, press ; internal unit (003) begins communicating with internal unit (002); the maximum duration of this communication is 2.5 minutes;

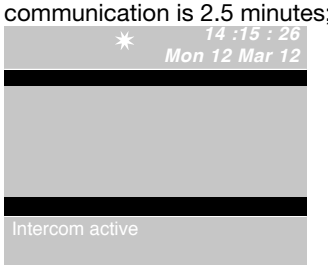

4. **hang up** the handset.

▶ Press **CANC** to reset an intercom call which has been active for more than one minute.

» If the internal unit **does not accept** the transferred conversation, or when the **system is busy**, or if the **call has not taken place correctly**, internal unit (002) remains on hold;

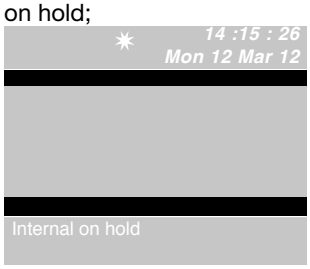

▶ cut off communication with internal unit (003) and press to resume communication with internal unit (002);



▶ to end the conversation, **hang up** the handset.

CAUTION!

If the external unit calls the switchboard during an intercom call between internal units which has been underway for more than one minute, the intercom call will be reset so that the switchboard can deal with the incoming call.

U6 How to call an internal unit listed in the received calls log

When the switchboard receives a call from an internal unit and it is not dealt with in the space of 30 sec. (operator momentarily absent or busy with another conversation), this is automatically stored in the **Received calls** menu**.**

The switchboard can log a maximum of 10 unsuccessful calls. The eleventh call replaces the first.

The display will show the number of the received calls (e.g. =3 flashing).

To call the internal units listed in the received calls log, proceed as follows:

1. press the **MENU** key and use the ▼▲ keys to view the **Receivedcalls** menu, press **OK**;

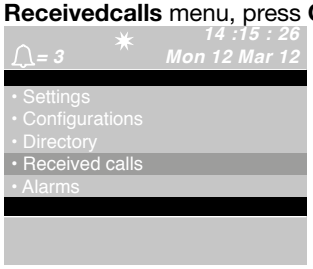

2. use the ▼▲ keys to view the **View** entry, press **OK**;

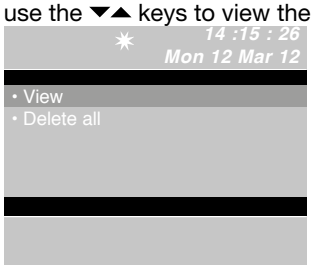

» *the calls received and made are displayed in chronological order, beginning with the most recent call received;*

3. use the ▼▲ keys to scroll through the list.

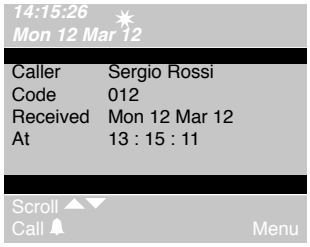

4. press to call the displayed internal unit.

▶ press the **MENU** key to display a screen in the bottom right-hand corner.



▶ press **OK** to confirm the settings;

▶ press **ESC** repeatedly to return to the main screen.

U7 How to call a secondary switchboard from a main switchboard

When calling a secondary switchboard, the main switchboard may use one of the 3 following methods:

- enter the switchboard number (e.g. 005 240) and press :

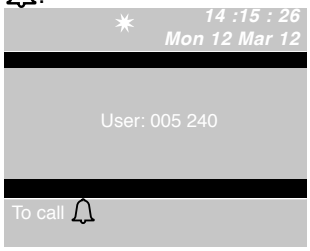

- scroll through the directory using the ▼▲ keys until the name is displayed and press :

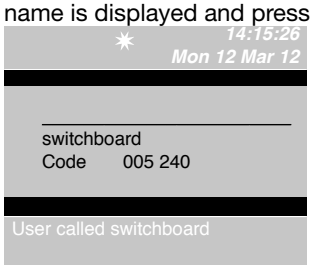

- press the corresponding **speed number** (see **"U22 Record speed numbers"**).

» *If the call has taken place correctly:*

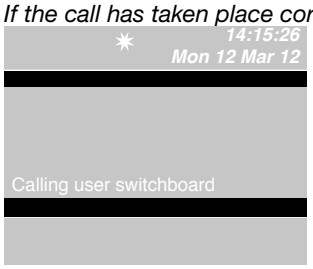

» *if the call has not taken place correctly:*

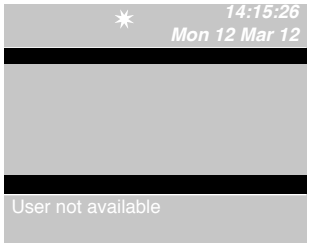

» *if the system is busy:*

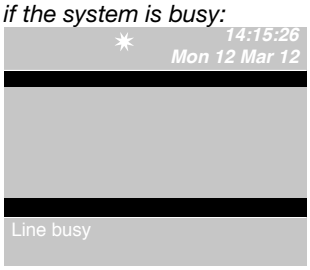

When the **handset of the switchboard called is lifted**, it communicates with the main switchboard, the maximum duration of the conversation is equal to the audio time set on the main switchboard (**MENU/Settings/Timers/Audio** - min. 10 seconds, max. 90 seconds).

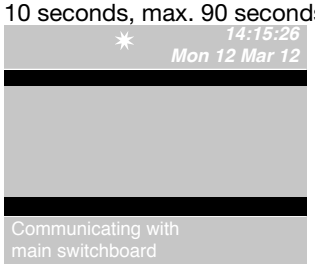

▶ to end the conversation, **hang up** the handset.

CAUTION! When the secondary switchboard and main switchboard are communicating with each other, calls cannot be transferred or put on hold.

U8 How to call a main switchboard from a secondary switchboard

To call a main switchboard from a secondary switchboard, press (#).

When the **handset of the main switchboard called is lifted**, it communicates with the secondary switchboard, the maximum duration of the conversation is equal to the audio time set on the main switchboard (**MENU/Settings/Timers/Audio**- min. 10 seconds, max. 90 seconds).

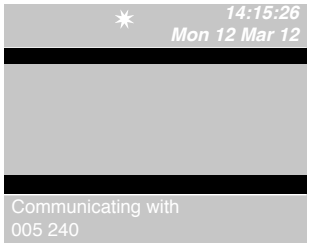

▶ to end the conversation, **hang up** the handset.

CAUTION! When the secondary switchboard and main switchboard are communicating with each other, calls cannot be transferred or put on hold.

U9 How to answer a call made from the secondary switchboard to the main switchboard

When the main switchboard receives a call from the secondary switchboard:

» the NAME of the secondary switchboard from which the call is being made, if it is listed in the directory (see **"U17 How to enter a name in the directory"**) or the address of the switchboard making the call (e.g. 005 240) is displayed.

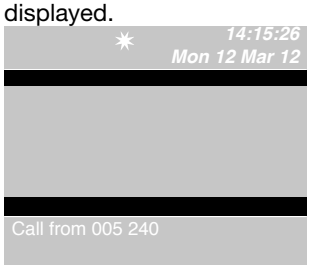

005= to reject the call, press CANC
240= indicates the general switchboard ID

▶ to **reject** the call, press **CANC**;

▶ to **answer** the call coming from the secondary switchboard, lift the handset;

» the main switchboard communicates with the secondary switchboard, with a maximum conversation time equal to the audio time set on the main switchboard (**MENU/Settings/Timers/Audio** - min. 10 seconds, max. 90 seconds);

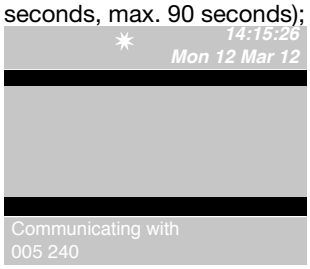

▶ to end the conversation, **hang up** the handset.

CAUTION! If the switchboard is busy or the switchboard operator is momentarily absent and cannot answer within 30 seconds, it will be added to the call queue (see "U6 How to call an internal unit listed in the received calls log").

U10 How to answer a call made from the main switchboard to the secondary switchboard

When the secondary switchboard receives a call from the main switchboard:

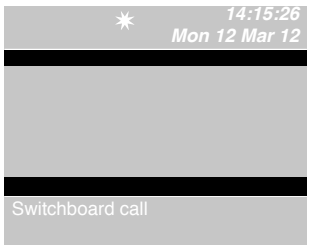

▶ to **answer** the call coming from the main switchboard, lift the handset;

▶ to end the conversation, **hang up** the handset.

CAUTION! If the switchboard is busy or the switchboard operator is momentarily absent and cannot answer within 30 seconds, it will be added to the call queue (see "U6 How to call an internal unit listed in the received calls log").

U11 How to activate or deactivate the main switchboards

When using 2 main switchboards configured in series (see **SBTOP audio/video system**),use one of the following methods:

1. press the **MENU** key for the active switchboard and use the ▼▲ keys to view the **Configurations** menu, press **OK**;

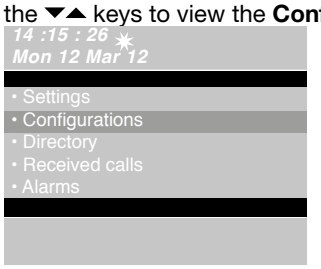

2. use the ▼▲ keys to view the **System menu**, press **OK**;

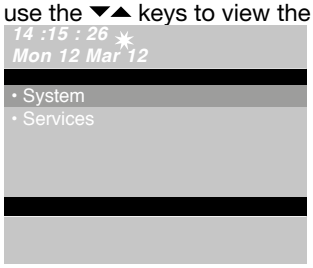

3. use the ▼▲ keys to view the **Link** menu, press **OK**;

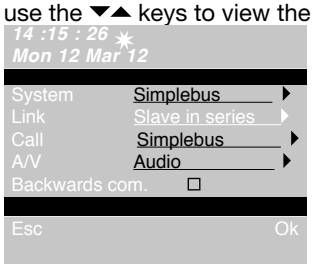

4. select **Slave in series** using the ◀▶ keys to make it inactive.

» *The switchboard will switch off, while the other switchboard will switch on automatically to become the Master in series.*

5. press **OK** to confirm the settings;

▶ press **ESC** repeatedly to return to the main screen.

or

1. press the **MENU** key for the inactive switchboard and use the ▼▲ keys to view the Configurations menu, press **OK**;

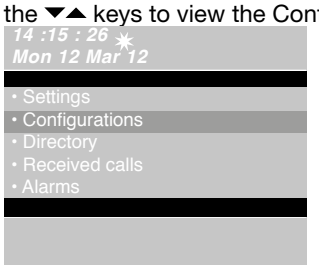

2. use the ▼▲ keys to view the **System** menu, press **OK**;

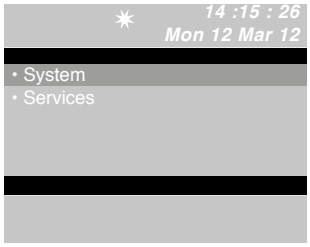

3. use the ▼▲ keys to view the **Link** menu, press **OK**;

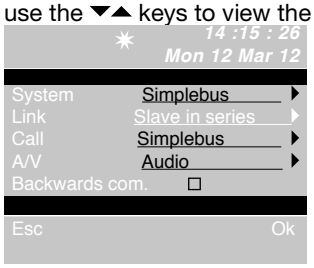

4. select the **Master in series** using the ◀▶ keys to confirm that the switchboard should be active.
   » *The other switchboard will be deactivated automatically, to become the Slave in series.*
5. press **OK** to confirm the settings;
   ▶ press **ESC** repeatedly to return to the main screen.

U12 How to use the lock-release

The external unit electric lock can be controlled by pressing key ⊙; if the command is executed a confirmation tone sounds.

U13 How to activate the “Follow Me” function (FollowMe)

This function can be used to divert calls for the switchboard to local or remote telephones.

CAUTION! To use this function, telephone switchboard Art. 2906 and interface Art. 2912 must be fitted. Contact your usual installer.

This function can only activated for the switchboard set as secondary (see ”C1 - Type of switchboard (Simplebus Top mode)”).

To activate this function:

1. press the **MENU** key and use the ▼▲ keys to view the **Configurations** menu, press **OK**;

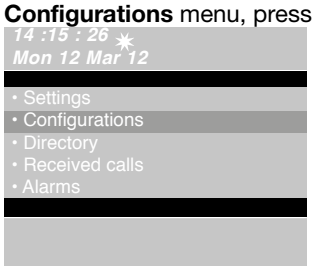

2. use the ▼▲ keys to view the **Services** menu, press **OK**;

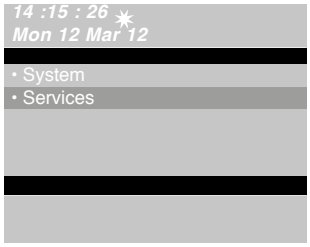

3. use the ▼▲ keys to view the **FollowMe** service.
4. Activate the service using the ▶ key.
   Disable it using ◀.

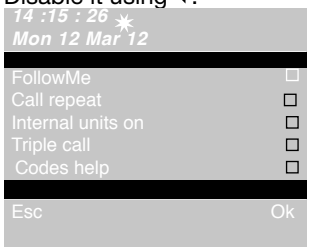

▶ press **OK** to confirm the settings;

▶ press **ESC** repeatedly to return to the main screen.

Once a call has been made, the switchboard will ring until the remote device begins communicating; the call can be answered from the switchboard by cancelling the “Follow me” function.

U14 How to activate an additional relay (e.g. to activate independently using a specific command: lights, CCTV alarm contacts, vehicle barriers, entrances without an external unit or other devices)

Actuators can be activated in standby mode and during conversation with an external unit.

CAUTION! To use this function, there must be a main external unit and actuators Art. 1256. Contact your usual installer.

To activate the actuator:

▶ press (*), you will be asked to enter the code to activate a specific actuator. If there is no code a generic actuator will be activated;

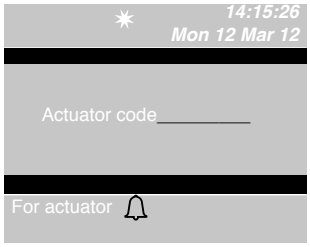

▶ to confirm actuator activation, press 🔔.

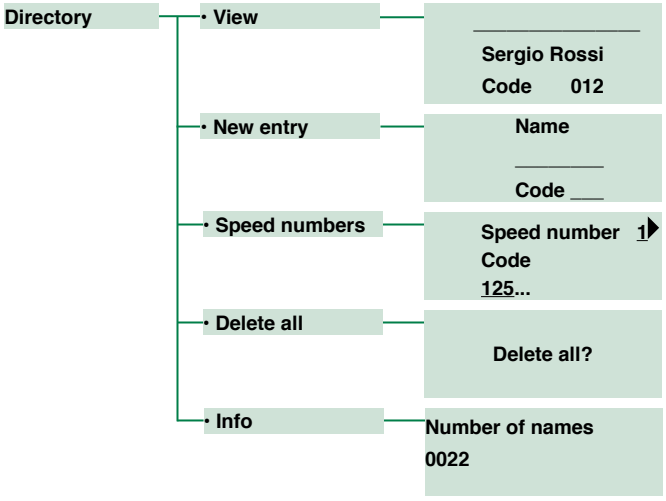

U15 How to use the directory

Up to 4000 names with a maximum of 13 alphanumeric characters can be entered, a code must be associated to each name in correspondence with the desired internal unit.

U16 How to find a name in the directory

- To view the directory, press 🕮 and scroll through the list of users with the ▼▲ keys; press hand hold the key to speed up scrolling. The NAME and CODE associated with each user will be displayed in sequence.

Or

1. press the **MENU** key and use the ▼▲ keys to view the Directory menu, press **OK**;

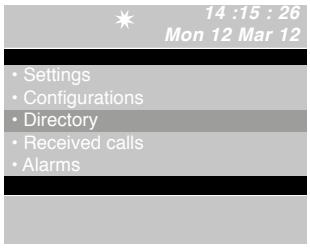

2. use the ▼▲ keys to view the View entry, press **OK**;

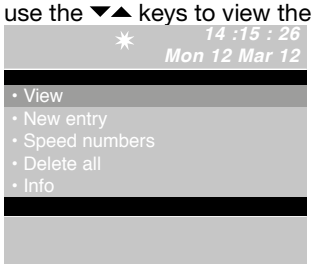

» *the names stored in the directory will be displayed in alphabetic order; use the ▼▲ keys to scroll through the list.*
To speed up scrolling, press and hold ▼ or ▲.



Or

- enter the name, even using just part of the extension; If there are several users with the same initial, you can scroll through the list using the ▼▲ keys .
- press the **MENU** key to display a screen in the bottom right-hand corner.



A new entry can be added, the selected entry deleted or edited, or the entire directory deleted.

Select the desired option using the ▼▲ keys, press **OK**.

- press **ESC** repeatedly to return to the main screen.

U17 How to enter a name in the directory

If you wish to enter a name in the directory:

1. press the **MENU** key and use the ▼▲ keys to view the Directory menu, press **OK**;

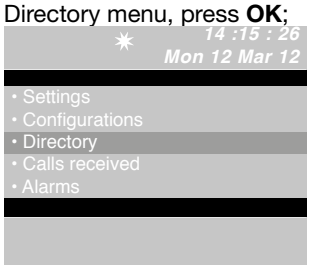

2. use the ▼▲ keys to view the **New entry** option, press **OK**;

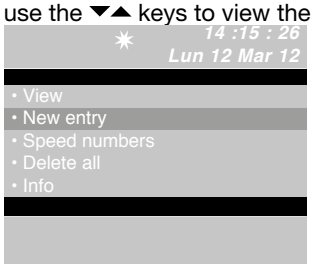

3. enter the new name using the alphanumeric keypad; press ▼ and enter the code using the keypad.
4. press **OK** to confirm the settings;

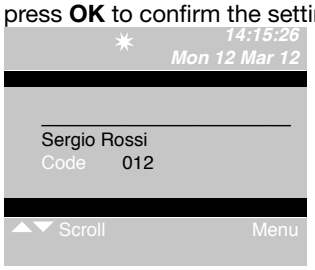

- press the **MENU** key to display a screen in the bottom

right-hand corner.



A new entry can be added, the selected entry deleted or edited, or the entire directory deleted.

- Select the desired option using the ▼▲ keys, press **OK**.
- press **ESC** repeatedly to return to the main screen.

U18 How to delete a name in the directory

CAUTION! To delete the entire directory, see "U20 Delete directory".

If you wish to delete a name in the directory:

1. press the **MENU** key and use the ▼▲ keys to view the **Directory** menu, press **OK**;
2. use the ▼▲ keys to view the **View** entry, press **OK**;

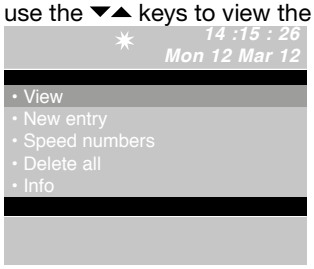

» *the names stored in the directory will be displayed in alphabetic order; use the ▼▲ keys to scroll through the list.*

To speed up scrolling, press and hold ▼ or ▲.

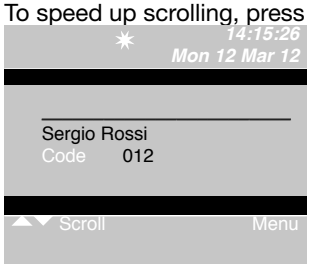

Or

1. enter the name, even using just part of the extension;

   If there are several users with the same initial, you can scroll through the list using the ▼ keys.



2. press the **MENU** key to display a screen in the bottom right-hand corner.

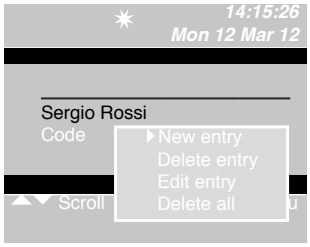

3. use the ▼ key to view the **Delete entry** option, press **OK**;

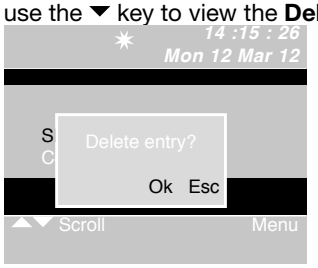

- to confirm deletion press **OK**;
- press **ESC** repeatedly to return to the main screen.

U19 How to edit a name in the directory

If you wish to edit a name in the directory:

1. press the **MENU** key and use the ▼▲ keys to view the Directory menu, press **OK**;

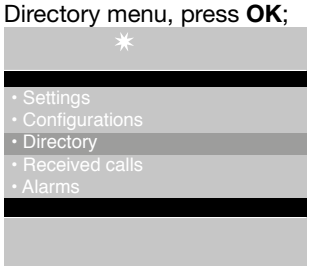

2. use the ▼▲ keys to view the **View** entry, press **OK**;

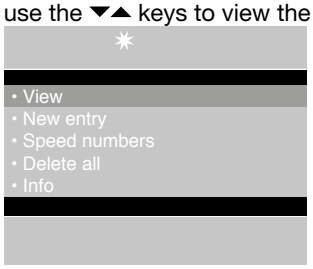

» *the names stored in the directory will be displayed in alphabetic order; use the ▼▲ keys to scroll through the list.*
To speed up scrolling, press and hold ▼ or ▲.

Or

1. enter the name, even using just part of the extension; If there are several users with the same initial, you can scroll through the list using the ▼▲ keys.
2. press the **MENU** key to display a screen in the bottom right-hand corner.

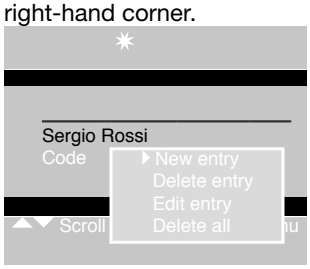

3. use the ▼ key to view the **Edit entry** option, press **OK**;

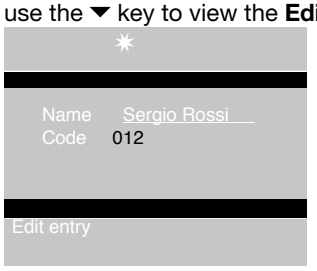

4. use the ▼▲ keys to view the entry you wish to edit (name or code).
5. press **CANC** to delete the selected entry and enter the new name or code using the alphanumeric keypad ;
6. to confirm the edited name, press **OK**; press **ESC** to exit.

U20 Delete directory

1. press the **MENU** key and use the ▼▲ keys to view the **Directory menu**, press **OK**;

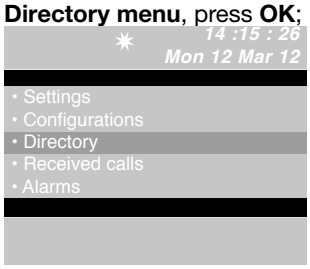

2. use the ▼▲ keys to view the **Delete all** option, press **OK**;

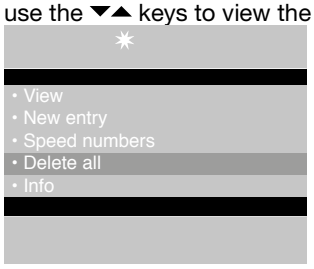

» *a screen will appear, asking if you wish to delete the entire directory; confirm using **OK** or cancel using **ESC**;*

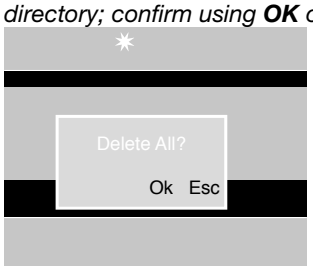

▶ press **ESC** repeatedly to return to the main screen.

U21 Directory info

1. press the **MENU** key and use the ▼▲ keys to view the **Directory menu**, press **OK**;

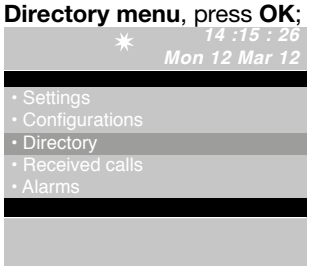

2. use the ▼▲ keys to view the **Info** entry, press **OK**;

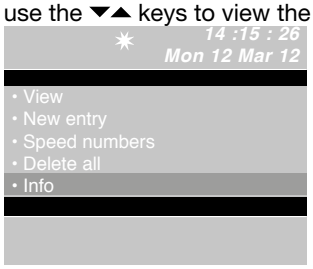

» a screen will appear, indicating the number of names stored in the directory;

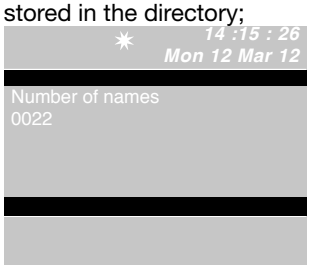

▶ press **ESC** repeatedly to return to the main screen.

U22 Record speed numbers

This function can be used to store, edit and delete speed numbers.

1. press the **MENU** key and use the ▼▲ keys to view the **Directory menu**, press **OK**;

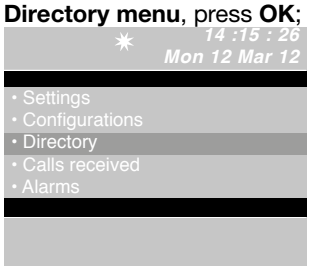

2. use the ▼▲ keys to view the **Speed numbers** option, press **OK**;

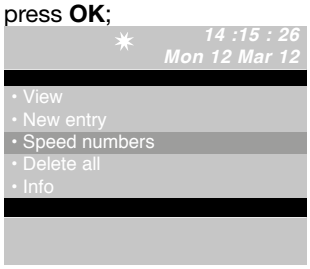

3. use the ◀▶ keys to display the speed number (from 1 to 8) to which a code will be assigned;

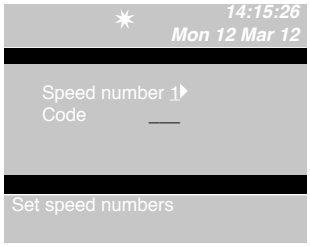

4. press ▼ and enter the code using the keypad;

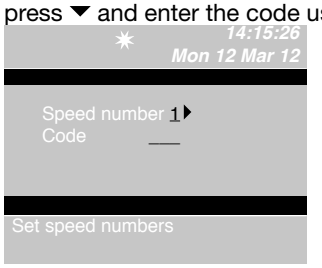

5. press **OK** to confirm the settings;
- ▶ press **ESC** repeatedly to return to the main screen.

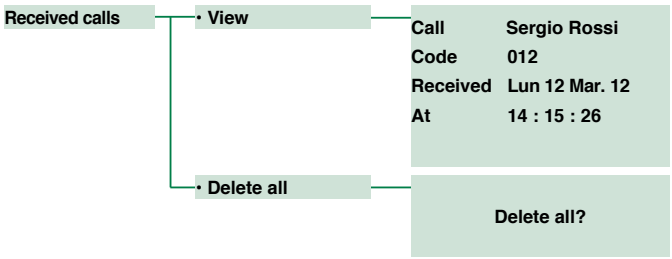

U23 - View received calls

1. To access the received calls quickly, press **MENU** + key **2** or press **MENU** and use the ▼▲ keys to view the **Received calls** menu, press **OK**;

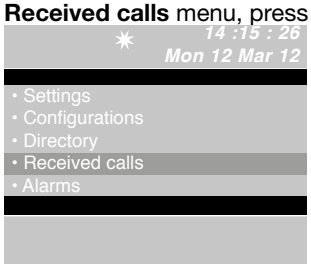

2. use the ▼▲ keys to view the **View** entry, press **OK**;

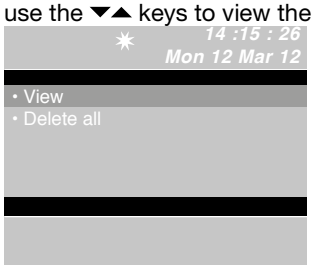

» *the calls received and made are displayed in chronological order, beginning with the most recent call received; use the ▼▲ keys to scroll through the list.*
To speed up scrolling, press and hold ▼ or ▲.

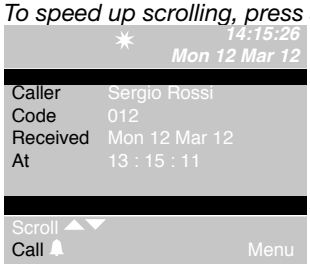

- ▶ press the **MENU** key to display a screen in the bottom right-hand corner.

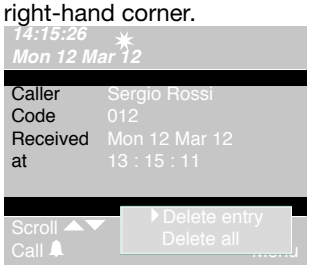

- ▶ press **OK** to confirm the settings;
- ▶ press **ESC** repeatedly to return to the main screen.

U24 - Delete received calls list

1. press the **MENU** and use the ▼▲ keys to view the **Received calls** menu, press **OK**;

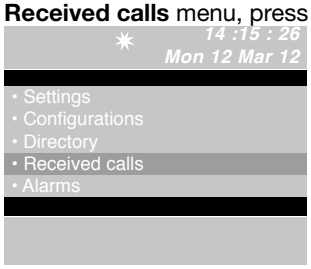

2. use the ▼▲ keys to view the **Delete all** option, press **OK**;

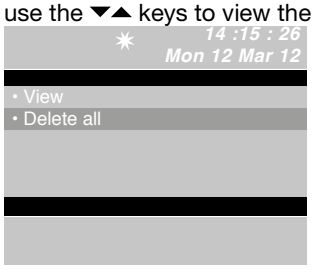

3. a screen will appear, asking if you wish to delete the list of incoming calls; confirm using **OK** or cancel using **ESC**;

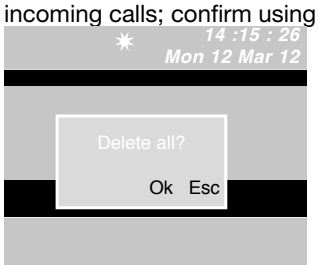

▶ press **ESC** repeatedly to return to the main screen.

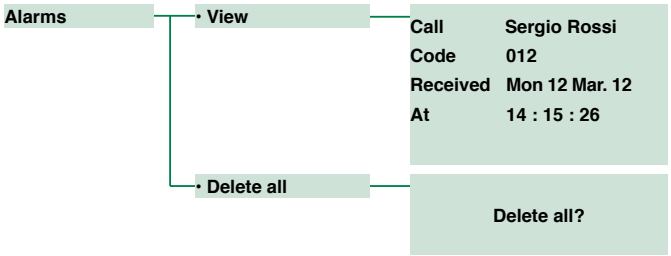

U25 - View alarms

1. To access alarm viewing mode quickly, press **MENU +** key **1**, or press **MENU** and use the ▼▲ keys to view the **Alarms** menu, press **OK**;

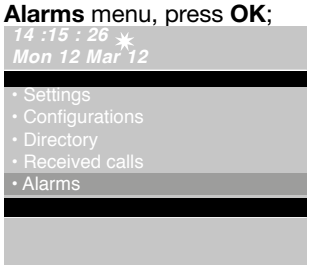

2. use the ▼▲ keys to view the **View** entry, press **OK**;

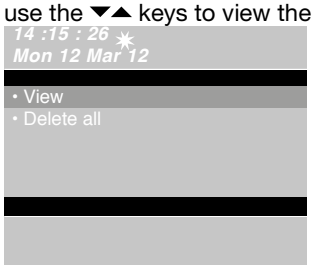

» *the calls are displayed in chronological order, beginning with the most recent call received; use the ▼▲ keys to scroll through the list. To speed up scrolling, press and hold ▼ or ▲.*

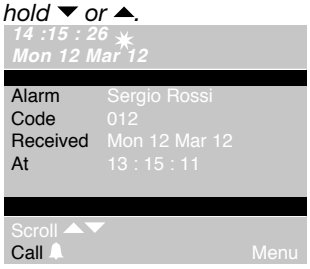

▶ press the **MENU** key to display a screen in the bottom right-hand corner.

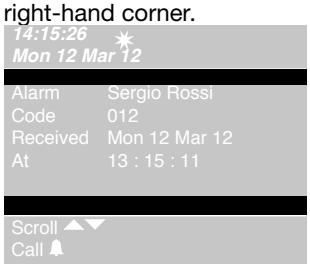

▶ press **ESC** repeatedly to return to the main screen.

U26 - Delete alarms received list

1. press the **MENU** key and use the ▼▲ keys to view the **Alarms** menu, press **OK**;

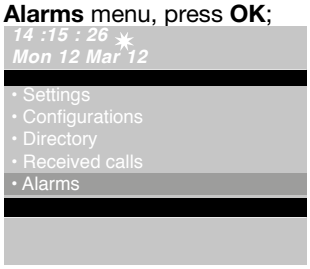

2. use the ▼▲ keys to view the **Delete all** option, press **OK**;

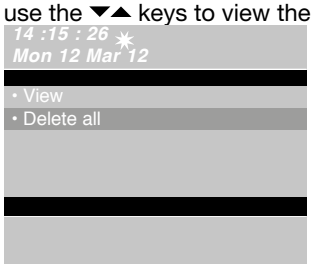

» *a screen will appear, asking if you wish to delete the list of incoming alarms; confirm using **OK** or cancel using **ESC**;*

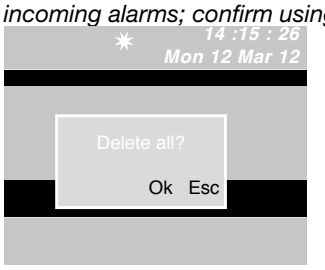

▶ press **ESC** repeatedly to return to the main screen.

Settings

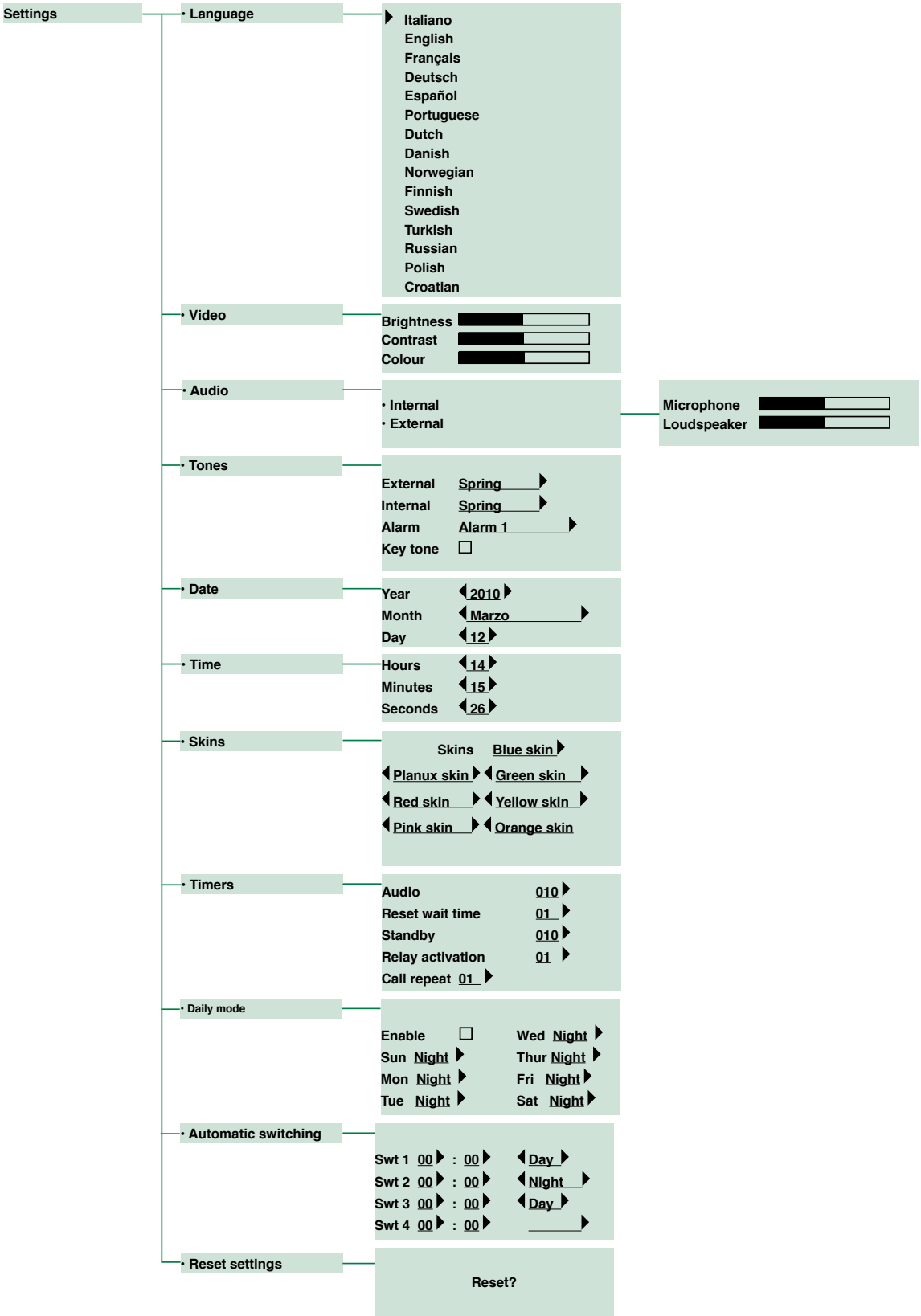
Settings
• Language
Italiano
English
Français
Deutsch
Español
Portuguese
Dutch
Danish
Norwegian
Finnish
Swedish
Turkish
Russian
Polish
Croatian
• Video
Brightness
Contrast
Colour
• Audio
• Internal
• External
Microphone
Loudspeaker
• Tones
External Spring
Internal Spring
Alarm Alarm 1
Key tone
• Date
Year 2010
Month Marzo
Day 12
• Time
Hours 14
Minutes 15
Seconds 26
• Skins
Skins Blue skin
Planux skin
Green skin
Red skin
Yellow skin
Pink skin
Orange skin
• Timers
Audio 010
Reset wait time 01
Standby 010
Relay activation 01
Call repeat 01
• Daily mode
Enable
Sun Night
Mon Night
Tue Night
Wed Night
Thur Night
Fri Night
Sat Night
• Automatic switching
Swt 1 00 : 00 Day
Swt 2 00 : 00 Night
Swt 3 00 : 00 Day
Swt 4 00 : 00
• Reset settings
Reset?

I1 - Change language

The switchboard language can be selected from the following list:

- **Italiano (default)**
- **English**
- **Français**
- **Deutsch**
- **Español**
- **Portuguese**
- **Dutch**
- **Danish**
- **Norwegian**
- **Finnish**
- **Swedish**
- **Turkish**
- **Russian**
- **Polish**
- **Croatian**

1. press the **MENU** key and use the ▼▲ keys to view the **Settings** menu, press **OK**;

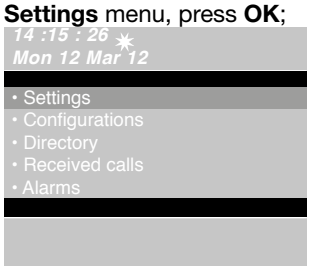

2. use the ▼▲ keys to view the **Language** menu, press **OK**;

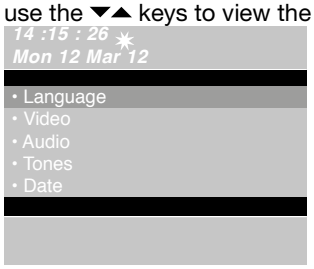

3. use the ▼▲ keys to view the selected language, press **OK** to confirm;

▶ press **ESC** repeatedly to return to the main screen.



I2 - Video settings

This function can be used to adjust the brightness, contrast and colour of the switchboard monitor.

1. To access the video settings quickly, press **MENU +** key **3**, or press **MENU** and use the ▼▲ keys to view the **Settings** menu, press **OK**;

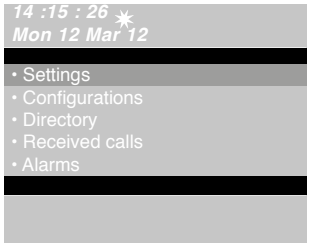

2. use the ▼▲ keys to view the Video menu, press **OK**;

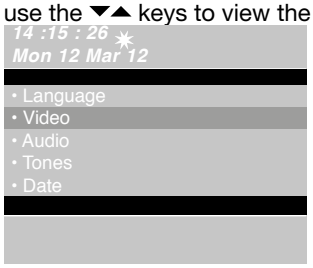

3. use the ▼▲ keys to view the video setting you wish to adjust (brightness, contrast, colour) and decrease or increase the value using the ◀▶ keys;

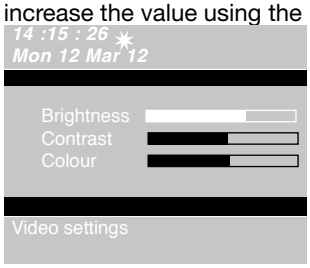

4. press **OK** to confirm the settings;

▶ press **ESC** repeatedly to return to the main screen.

I3 - Audio settings

This function can be used to adjust the volume of the switchboard microphone and loudspeaker as it communicates with the internal units and the external unit.

N.B. For volume adjustment to take place, the switchboard must be in communication with the internal unit or the external unit.

1. To access the audio settings quickly, press **MENU +** key **4 (external)**, key **5 (internal)** or press **MENU** and use the ▼ ▲ keys to view the **Settings** menu, press **OK**;

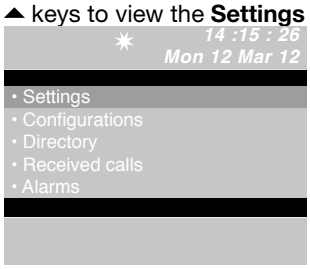

2. use the ▼▲ keys to view the **Audio** menu, press **OK**;

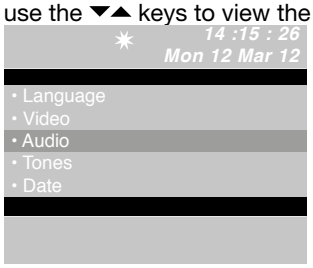

3. use the ▼▲ keys to view the audio setting you wish to adjust (internal and/or external), press **OK**;

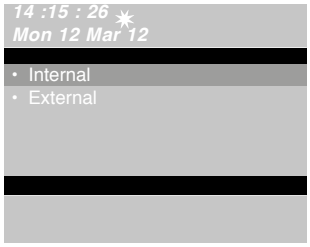

4. use the ▼▲ keys to view the audio setting you wish to adjust (microphone and/or loudspeaker) and decrease or increase the value using the ◀ ▶ keys;

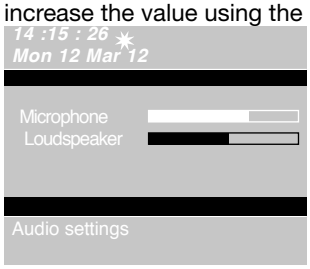

5. press **OK** to confirm the settings;

▶ press **ESC** repeatedly to return to the main screen.

I4 - Tone settings

This function can be used to set the melody for incoming calls made from the internal units, and the external unit, as well as alarm calls; it is also possible to activate or deactivate the key tone.

1. press the **MENU** key and use the ▼▲ keys to view the **Settings** menu, press **OK**;

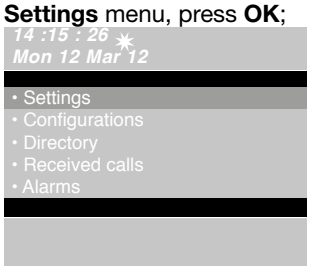

2. use the ▼▲ keys to view the **Tones** menu, press **OK**;

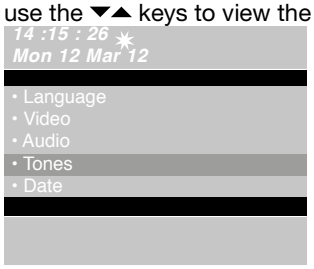

3. use the ▼▲ keys to view the tone you wish to adjust (external, internal, alarm or key tone);

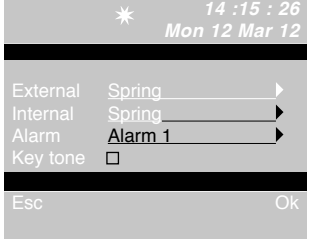

4. select the melody using the ◀ ▶ keys.
5. Activate the Tone service using the ▶ key. Disable it using ◀;
6. press **OK** to confirm the **settings**;

▶ press **ESC** repeatedly to return to the main screen.

I5 - Change date

1. press the **MENU** key and use the ▼▲ keys to view the **Settings** menu, press **OK**;

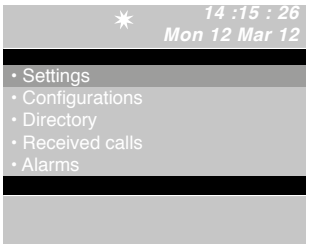

2. use the ▼▲ keys to view the **Date** menu, press **OK**;

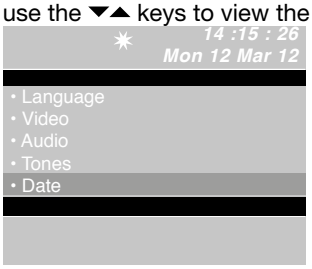

3. use the ▼▲ keys (year, month, day) and change it using the ◀ ▶ keys;

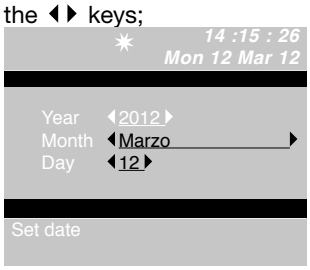

4. press **OK** to confirm the settings;

▶ press **ESC** repeatedly to return to the main screen.

I6 - Change time

1. press the **MENU** key and use the ▼▲ keys to view the **Settings** menu, press **OK**;

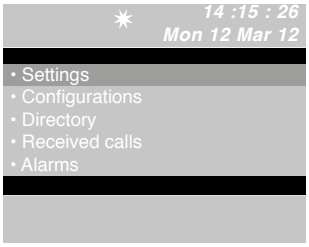

2. use the ▼▲ keys to view the **Time** menu, press **OK**;

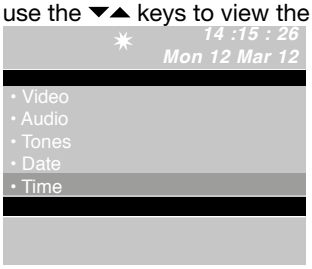

3. use the ▼▲ keys (hours, minutes, seconds) and decrease or increase the value using the ◀ ▶ keys ◀ ▶;

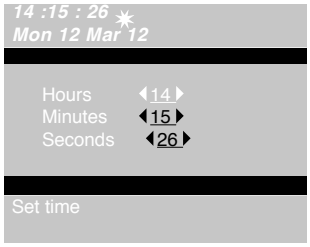

4. press **OK** to confirm the settings;

▶ press **ESC** repeatedly to return to the main screen.

I7 - Set skin

This function can be used to change the colour of the menu screens.

1. press the **MENU** key and use the ▼▲ keys to view the **Settings** menu, press **OK**;

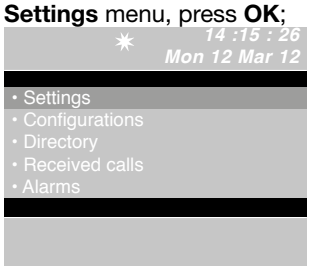

2. use the ▼▲ keys to view the Skins menu, press **OK**;

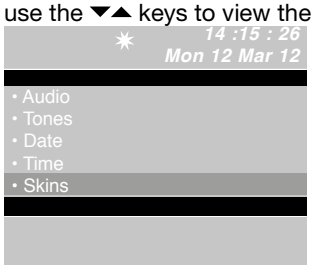

3. use the ◀ ▶ keys to select the desired skin;

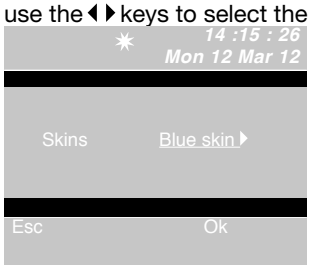

4. press **OK** to confirm the setting;

▶ press **ESC** repeatedly to return to the main screen.

I8 - Adjust timers

This function can be used to set the audio, reset wait time, standby, relay activation and call repeat timers.

1. press the **MENU** key and use the ▼▲ keys to view the **Settings** menu, press **OK**;

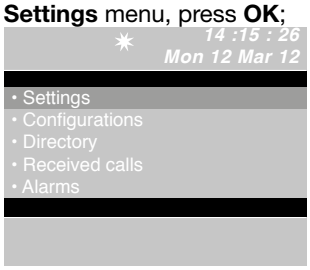

2. use the ▼▲ keys to view the **Timers** menu, press **OK**;

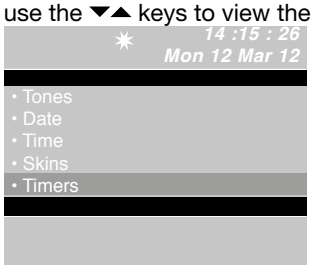

3. use the ▼▲ keys to view the setting you wish to adjust (audio, reset wait time, standby, relay activation, call repeat) and decrease or increase the value using the ◀ ▶ keys. To speed up scrolling, press and hold ◀ or ▶.

Audio values: 10''-180'' max.

Reset wait time values: 1''-10'' max.

Standby values: 10''-120'' max.

Relay activation values: 1''-20'' max.

Call repeat values: 1''-30'' max;

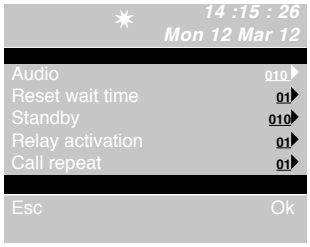

4. press **OK** to confirm the settings;

▶ press **ESC** repeatedly to return to the main screen.

I9 - Set daily mode

You can decide to organise the week by selecting one of these 3 operating modes for each day:

- **AUTO**: the system passes from DAY mode to NIGHT mode at the programmed times.
- **NIGHT**: the system is in this mode for the whole day.
- **DAY**: the system is in this mode for the whole day.

If the "**auto**" setting is selected, throughout the day the operating mode will switch at pre-set times, on the basis of the programming set in accordance with paragraph **"I10 - Set automatic switching"**.

To deactivate the function, press ☀☾.

To activate it:

1. press the **MENU** key and use the ▼▲ keys to view the

Settings menu, press **OK**;

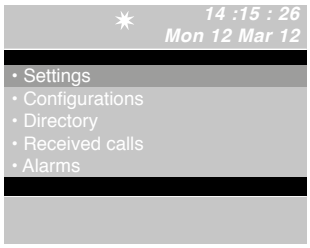

2. use the ▼▲ keys to view the **Daily mode** menu, press **OK**;

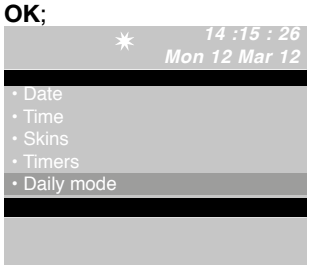

3. use the ▼▲ keys to view the day to be set and select night, day or auto mode using the ◀ ▶ keys.

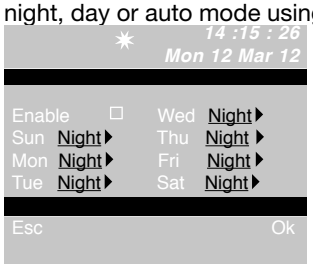

4. once programming for each day of the week is complete, select **Enable** and activate the whole programming schedule using ▶, to disable use ◀;
5. press **OK** to confirm the settings;
   - ▶ press **ESC** repeatedly to return to the main screen.

I10 - Set automatic switching

The system can be set to allow automatic passage from DAY mode to NIGHT mode at specific times which can be programmed by the user. Up to 4 TIMETABLES can be set, and switching mode will be set for each on (Day or Night).

Example:

You want to configure the switchboard with the following parameters:

07:00 -12:00 Day mode operation

13:00 - 22:00 Day mode operation

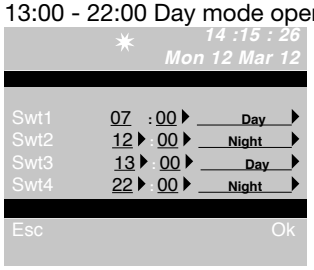

1. press the **MENU** key and use the ▼▲ keys to view the **Settings** menu, press **OK**;

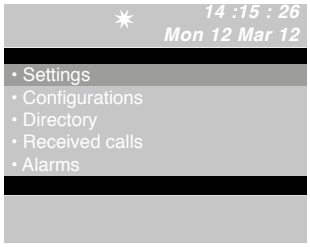

2. use the ▼▲ keys to view the **Automatic switching** menu, press **OK**;

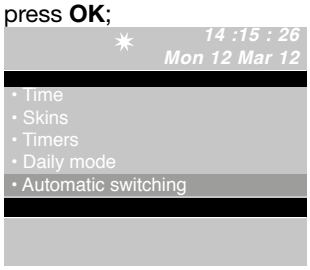

3. the cursor will automatically be positioned on the min. time for switching 1; decrease or increase the value using the ◀ ▶ keys.
   The value ranges from 00 to 23.
   To speed up scrolling, press and hold ◀ or ▶.
4. select the value, in minutes, of switching 1 using ▼, decrease or increase the value using the ◀ ▶ keys. The value ranges from 00 to 59.
   To speed up scrolling, press and hold ◀ or ▶.

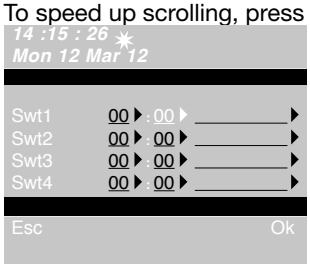

5. select the last entry for switching 1 using ▼, select the mode (day, night) using the ◀ ▶ keys.

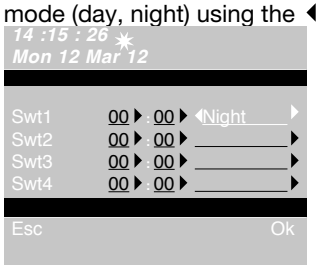

follow the procedure described up to this point for all necessary switching procedures;

6. press **OK** to confirm the settings;
   - ▶ press **ESC** repeatedly to return to the main screen.

I11 - Reset settings

1. press the **MENU** key and use the ▼▲ keys to view the **Settings** menu, press **OK**;

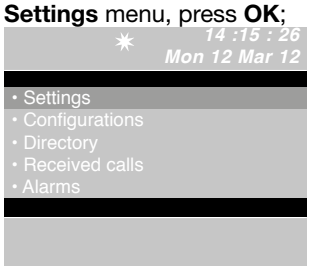

2. use the ▼▲ keys to view the Reset settings menu, press **OK**;

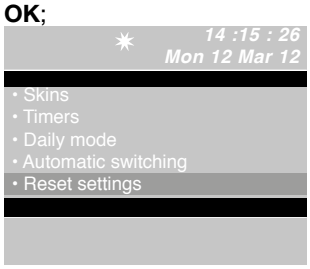

3. a screen will appear, asking if you wish to reset the settings; confirm using **OK** or cancel using **ESC**;

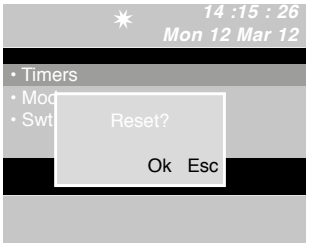

4. if you press **OK**, the system reboot screen will appear;

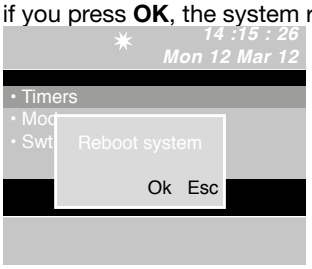

5. confirm the system reboot using OK or cancel using **ESC**;
   - ▶ press **ESC** repeatedly to return to the main screen.

Installer configurations

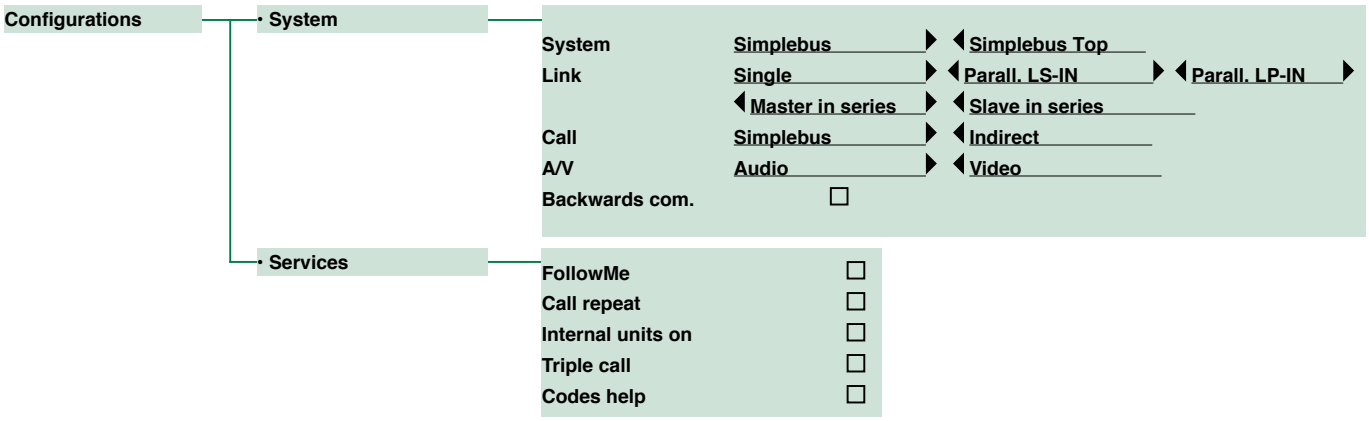

INSTALLER CONFIGURATIONS

This section is aimed at qualified technicians who, after installing the product, will program the porter switchboard using guided menus, which can be viewed on the display by navigating the main menu.

C1 - Type of switchboard (Simplebus Top mode)

The switchboard may be secondary or main.

- Set **Simplebus** when the switchboard is used as secondary, as output from the LM-LM terminals of switching devices Art. 1424 (Simplebus TOP system) (see SBTOP audio/video system); or when the switchboard is used in Simplebus systems with switching devices Art. 1224A or in a system with a single riser and no switching devices.
  CAUTION! the secondary switchboard cannot be configured as a switchboard in parallel.
- Set Simplebus top when the switchboard is used as main in a Simplebus top system, and therefore positioned upline of switching devices Art. 1424 marking the zones/risers (see SBTOP audio/video system).

The secondary or main switchboard must then be configured as:

1- SINGLE

2- PARALLEL

3- SERIES.

1. Select **single** when the switchboard is the only one in the system, or the only one serving a specific riser.
2. If there are 2 main or secondary switchboards serving the same riser, the parallel configuration means that both switchboards will be operating with the same functions (see SBTOP audio/video system).
   - » The first of the two to answer a call will preclude the possibility of the other one performing the same procedure.
   - » If one of the 2 devices is switched on or off, the other will automatically follow suit.
   - ▶ Set the switchboard connected under the LS-LS line of switching device Art. 1424 as **Parall. LS-IN**; set the switchboard located under the LPin-LPin line of switching device Art. 1424 as **Parall. LP-IN**.

     For the parallel switchboard, switching to NIGHT and the AUTOMATIC DAY/NIGHT function is not possible (see "I9 - Set daily mode").

     A **P** should appear on the standby screen of the two switchboards, indicating that the switchboard is configured in parallel, in addition to the fixed icon .
3. If there are 2 main or secondary switchboards serving the same riser, the **series** configuration means that only 1 of the 2 can operate at one time **(Master in series)**, while the other is deactivated **(Slave in series)** (see SBTOP audio/video system).
   - ▶ To change a switchboard from master to slave and vice-versa, see "U11 How to activate or deactivate the main switchboards".
   - » An **S** should appear on the standby screen of the two switchboards, indicating that the switchboard is configured in series, in addition to the fixed icon .

CAUTION!

- » if flashes, it is indicating that the 2 switchboards are not communicating correctly.
- » *if the icon ! appears, there is a problem with the configuration of the 2 switchboards (e.g. both master or slave in series, Parall. LP-IN or Parall. LS-IN or one in series and the other parallel).*
- » *if in a Simplebus TOP system (with switching devices Art. 1424), both main and secondary switchboards are present (see SBTOP audio/video system); for correct system operation the setting "C5 - Backwards compatibility" must be activated on all switchboards.*

C2 - How to configure a main or secondary switchboard

1. press the **MENU** key and use the ▼▲ keys to view the **Configurations** menu, press **OK**;

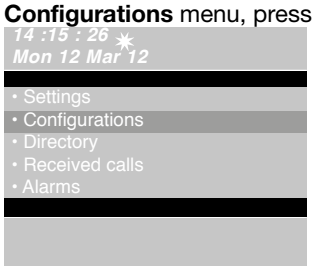

2. use the ▼▲ keys to view the **System** menu, press **OK**;

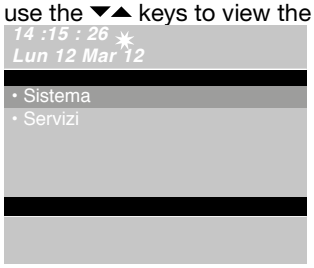

3. use the ▼▲ keys to view the **System** menu, press **OK**.

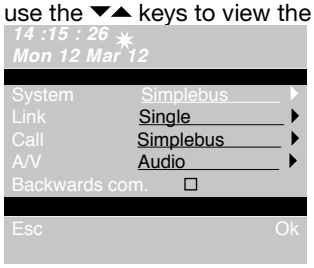

4. press **OK** to confirm the settings;
   ▶ press **ESC** repeatedly to return to the main screen.

C3 - How to configure a switchboard as single, parallel or series

1. press the **MENU** key and use the ▼▲ keys to view the **Configurations** menu, press **OK**;

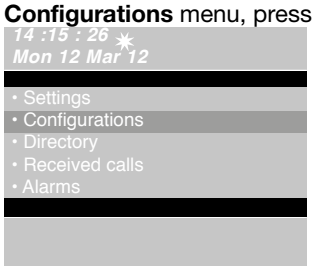

2. use the ▼▲ keys to view the **System** menu, press **OK**;

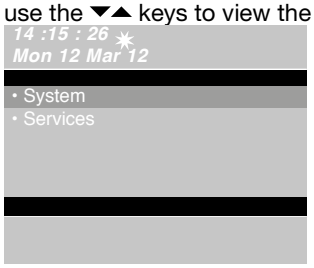

3. use the ▼▲ keys to view the **Link** menu, press **OK**;

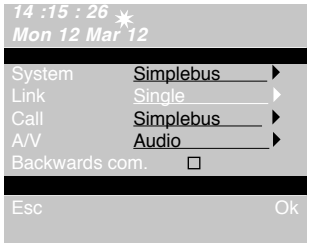

4. select **Single, Parall. LS-IN, Parall. LP-IN, Master in series, Slave in series** using the ◀▶ keys.
5. press **OK** to confirm the settings;
   ▶ press **ESC** repeatedly to return to the main screen.

C4 - Call via Simplebus or indirect code

This function can be used to select the manual switchboard calling mode, from the 2 options available:

1. **Simplebus call (default)**, the call is made by entering the code corresponding to each user.
   » If the system is a **Simplebus** type, the door-entry phone user is identified by a User Name field (optional) and a Code field no longer than 3 digits (between 1 and 240)
   EXAMPLE: User name = Smith; Code = 015.
   » If using a **Simplebus top** system, the door-entry phone user is identified by the User Name field (optional) and a Code field consisting of 2 parts, a zone field with up to 3 digits (between 1 and 500) and a user field which must have 3 digits (between 1 and 240).
   EXAMPLE: User name = Smith; Code = 25 015.
2. **Indirect call**, the call is made by entering the indirect code, which should have a maximum of 6 digits. This code must be stored in the memory and associated with the user who has been given a name (compulsory) and Simplebus (or Simplebus TOP code).

To activate the function:

1. press the **MENU** key and use the ▼▲ keys to view the **Configurations** menu, press **OK**;

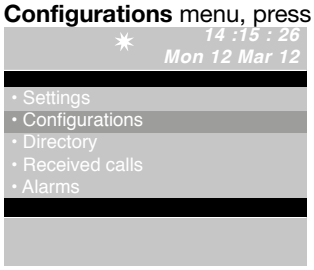

2. use the ▼▲ keys to view the **System** menu, press **OK**;

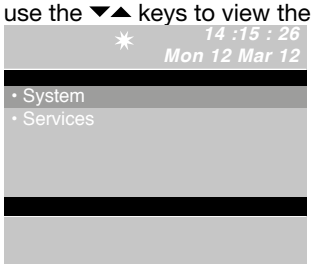

3. use the ▼▲ keys to view the **Call** menu, press **OK**;

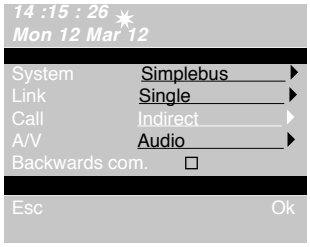

4. select Simplebus or Indirect using the ◀ ▶ keys.
5. press **OK** to confirm the settings;
   ▶ press **ESC** repeatedly to return to the main screen.

C5 - Backwards compatibility

This is disabled by default.

To activate the function:

1. press the MENU key and use the ▼▲ keys to view the Configurations menu, press **OK**;

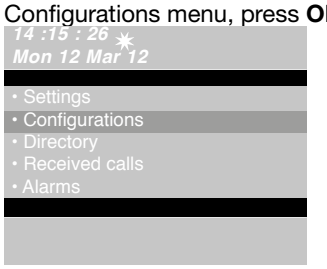

2. use the ▼▲ keys to view the **System** menu, press **OK**;

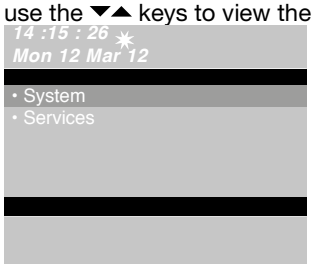

3. use the ▼▲ keys to view the **Backwards com.** menu, press **OK**;

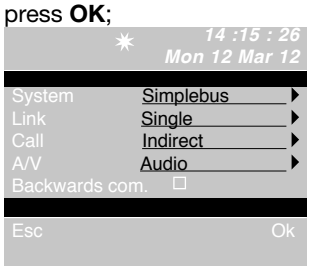

4. Activate the **Backwards com**. service using the ▶ key. Disable it using ◀.
5. press **OK** to confirm the settings;
   ▶ press **ESC** repeatedly to return to the main screen.

C6 - Audio or video call

Audio call by default.

Activating video calling will allow you to make a video call to an internal unit. The monitor called by the switchboard will switch on, making it possible to view, for example, the images from the remote cameras connected to Art. 1259/A or Art. 1259C (see **SBTOP audio/video system**).

When backwards compatibility *is deactivated (see* ***"C5 - Backwards compatibility"****), when the internal unit receives a call from the switchboard, the video comes on immediately by default.*

When backwards compatibility *is activated, when the internal unit receives a call from the switchboard, the video comes on when the handset is lifted.*

To activate audio or video calling:

1. press the **MENU** key and use the ▼▲ keys to view the **Configurations** menu, press **OK**;

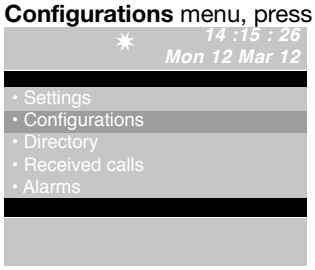

2. use the ▼▲ keys to view the **System** menu, press **OK**;

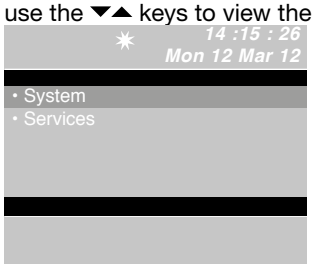

3. use the ▼▲ keys to view the A/V menu, press **OK**;

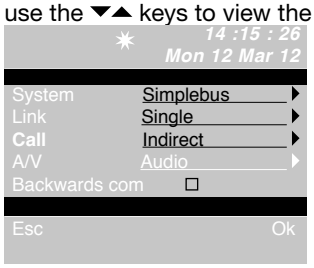

4. select Audio or Video using the ◀ ▶ keys.
5. press **OK** to confirm the settings;
   ▶ press **ESC** repeatedly to return to the main screen.

C7- Configure services

FollowMe:

This is disabled by default.

CAUTION! To use this function, telephone switchboard Art. 2906 and interface Art. 2912 must be fitted. Contact your usual installer.

This function can only activated for the switchboard set as secondary (see **"C1 - Type of switchboard (Simplebus Top mode)"**).

This function can be used to divert calls for the switchboard to local or remote telephones.

Once a call has been made, the switchboard will ring until the remote device begins communicating; the call can be answered from the switchboard by cancelling the "Follow me" function.

Call repeat:

timed contact closure between 1 and 30 seconds can be selected (see **"I8 - Adjust timers"**).

Internal units on:

This is disabled by default.

CAUTION! This function is only available for non-TOP Simplebus systems and requires Art. 1259 for the cyclic displaying of images from remote cameras.

This function can be used to activate or deactivate the self-ignition transmitted by the internal units with the switchboard in DAY mode.

Triple call:

This is disabled by default.

This function can be used to activate or deactivate the triple call made by the switchboard to the internal units.

The call will therefore take place on consecutive occasions (in the case of video calls: the first will be audio calls and the third will be a video call).

Codes help:

This is disabled by default.

It is used to expand the Simplebus codes on the riser line.

To activate the services:

1. press the **MENU** key and use the ▼▲ keys to view the **Configurations** menu, press **OK**;

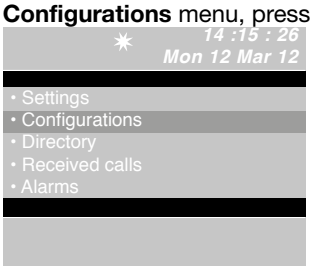

2. use the ▼▲ keys to view the **Services** menu, press **OK**;

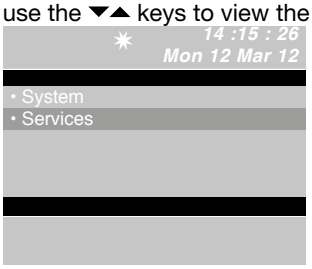

3. use the ▼▲ keys to view the service you wish to activate (FollowMe, call repeat, internal units on, triple call, codes help).
4. Activate the service using the ▶ key.
   Disable it using ◀.

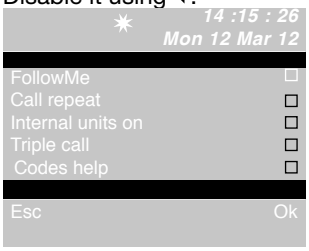

5. press **OK** to confirm the settings;
   ▶ press **ESC** repeatedly to return to the main screen.

System performance and layouts

For further information of system performance and to view installation layouts, click on the system type that best meets your requirements:

- **SBTOP audio/video system** for the creation of audio-video systems for *residential complexes.*

Table of contents

Warning

Description 639

Technical features 639

Connection 639

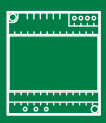

Power supply unit Art. 1595

Description

Power supply unit with 120-230V primary and 33Vdc 500 mA continuous output, and 1.2A inrush current, for Ikall entrance panel external unit. Equipped with internal protection against current overload and short circuits.

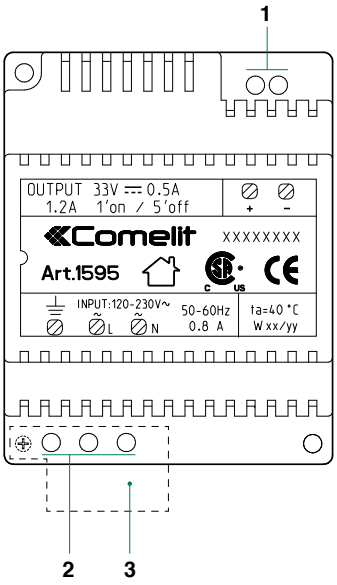

1. 33Vdc continuous 500mA and 1.2A output

2. 120-230V~ mains voltage input

3. Terminal protection

A suitable omnipolar switch with a contact opening of at least 3mm must be installed upstream of the video entry phone system.
• Disconnect the power supply before carrying out any operations on the wiring.
• Replace the protections on the terminals.
• Do not obstruct the ventilation and cooling slits or openings.

Technical features

MAIN FEATURES	
Alternating input voltage (VAC)	120÷230
Output voltage (VDC)	33
Applicable to DIN rail	Yes
Number of DIN modules	4
Max. current delivered (A)	1.2
GENERAL DATA	
Product height (mm)	62
Product width (mm)	71.7
Depth (mm)	90
Type of finish	Plastic
Product colour	White
Operating temperature (°C)	-20÷40
COMPATIBILITY	
Simplebus Top audio/video system	Yes
Building Kit audio/video system	Yes
Simplebus 2 audio system	Yes
Simplebus 1 audio system	Yes
Vip system	Yes
Kit audio/video system	Yes
ELECTRICAL SPECIFICATIONS	
Maximum power delivered (W)	60

Connection

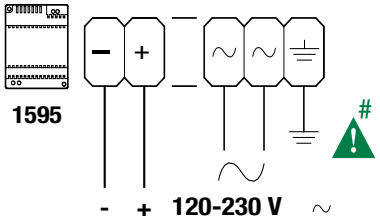

Connect the terminal to earth

Table of contents

Warning

Description 641

Technical features 641

Connection 641

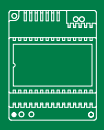

Transformer Art. 1212/B

Description

*Article **1212/B** is a transformer with 230V AC input, 0-20V DC / 14VA output. Equipped with an internal protection PTC element. Can be used in SBTOP, SBTOP, Building kit, and Video Kit systems.*

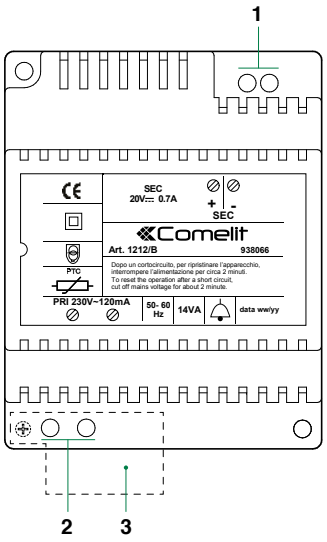

1. Output 0 20V DC / 14 VA

2. 230 V~ mains voltage input

3. Terminal protection

A suitable omnipolar switch with a contact opening of at least 3mm must be installed upstream of the video entry phone system.

- ***Disconnect the power supply before carrying out any operations on the wiring.***
- ***Replace the protections on the terminals.***
- ***Do not obstruct the ventilation and cooling slits or openings.***

Technical features

MAIN FEATURES	
Alternating input voltage (VAC)	230
Output voltage (VDC)	20
Applicable to DIN rail	Yes
Number of DIN modules	4
Max. current delivered (A)	0.70
GENERAL DATA	
Product height (mm)	90
Product width (mm)	72
Depth (mm)	62
Type of finish	Plastic
Product colour	White
Operating temperature (°C)	-5÷ 40
COMPATIBILITY	
Simplebus Top audio/video system	Yes
Building Kit audio/video system	Yes
Kit audio/video system	Yes
ELECTRICAL SPECIFICATIONS	
Maximum power delivered (W)	14

Connection

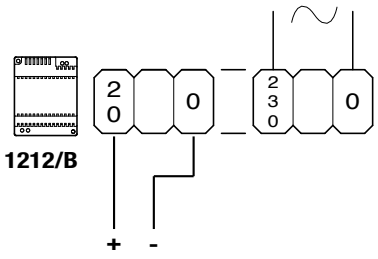

Table of contents

Warning

Description 643

Technical features 643

Connection 643

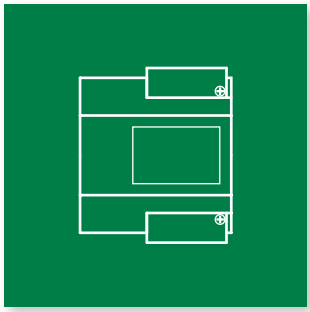

Transformer Art. 1195

Description

DIN rail mount transformer (5 modules), 230-254V AC/50-60 Hz input, 12/24 Vac 60 VA with terminal board.

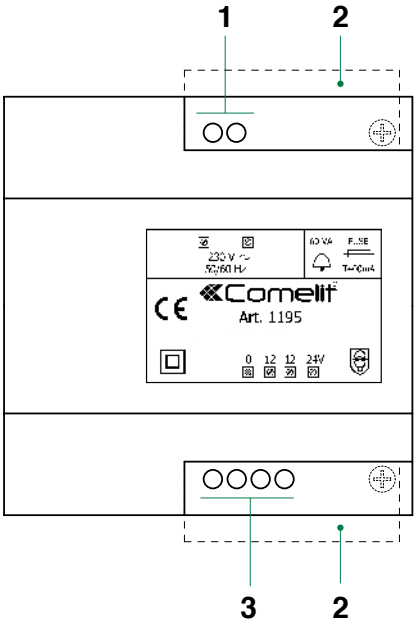

1. 230 Vac / 50-60 Hz mains voltage input

2. Terminal protection

3. Output 12 / 24 Vac

A suitable omnipolar switch with a contact opening of at least 3mm must be installed upstream of the video entry phone system.

- ***Disconnect the power supply before carrying out any operations on the wiring.***
- ***Replace the protections on the terminals.***
- ***Do not obstruct the ventilation and cooling slits or openings.***

Technical features

MAIN FEATURES	
Alternating input voltage (VAC)	230
Alternating output voltage (Vac)	24
Applicable to DIN rail	Yes
Number of DIN modules	5
GENERAL DATA	
Product height (mm)	105
Product width (mm)	87.5
Depth (mm)	65
Type of finish	Plastic
Operating temperature (°C)	-5 ÷40
COMPATIBILITY	
Simplebus Top audio/video system	Yes
Building Kit audio/video system	Yes
Simplebus 2 audio system	Yes
Simplebus 1 audio system	Yes
Kit audio/video system	Yes
AUDIO/VIDEO FEATURES	
Audio system	Yes
Audio/video system	Yes
ELECTRICAL SPECIFICATIONS	
Maximum power delivered (W)	60

Connection

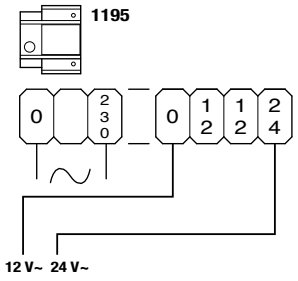

Table of contents

Warning

Description 645

Technical features 645

Connection 645



Transformer Art. 1200

Description

Transformer with 230V primary, 12V AC / 15 VA secondary winding for continuous use. Dimensions: 53x95x65 mm (3 DIN modules).

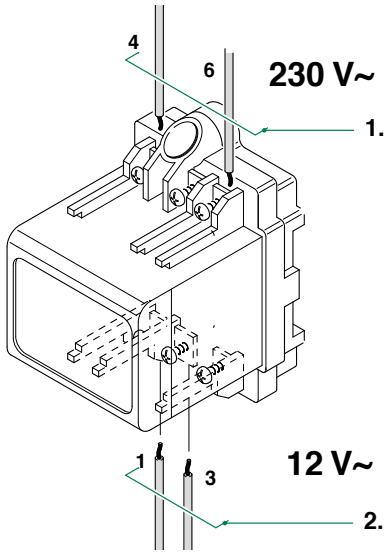

1. 230 V AC digital input.

2. Secondary 12 V AC output.

A suitable omnipolar switch with a contact opening of at least 3mm must be installed upstream of the video entry phone system.

• Disconnect the power supply before carrying out any operations on the wiring.
• Replace the protections on the terminals.
• Do not obstruct the ventilation and cooling slots or apertures.

Technical features

MAIN FEATURES	
Alternating input voltage (VAC)	230
Alternating output voltage (Vac)	12
Applicable to DIN rail	Yes
Number of DIN modules	3
Max. current delivered (A)	0.90
GENERAL DATA	
Product height (mm)	95
Product width (mm)	53
Depth (mm)	65
Type of finish	Plastic
Product colour	Black
Operating temperature (°C)	-5 ÷ 40
COMPATIBILITY	
Simplebus Top audio/video system	Yes
Building Kit audio/video system	Yes
Simplebus 2 audio system	Yes
Simplebus 1 audio system	Yes
Vip system	Yes
Kit audio/video system	Yes
Traditional system	Yes
Simplified system	Yes
ELECTRICAL SPECIFICATIONS	
Maximum power delivered (W)	15

Connection

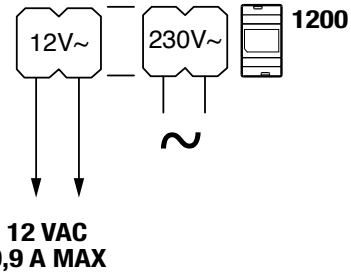

Table of contents

Warning

Description 647

Connections 648
- 1404 connections 648

Operation and Programming 649
- Standard mode (default) 649
- TOP 1 mode 649
- TOP 2 mode 649
- TOP 3 mode 649
- Examples 650
- Special programmes 650
- Programming table for dip-switches and S3 setting 651

Technical specifications 652

System performance and layouts 652

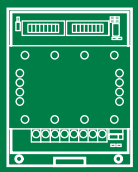

Digital switching module for 2-wire system Art. 1404

Description

Article 1404 is an audio/video switch unit that can be used in "Building Kit" (exclusively 2-wire), Simplebus Top and Kit Video systems. To be used in systems with more than one entrance.

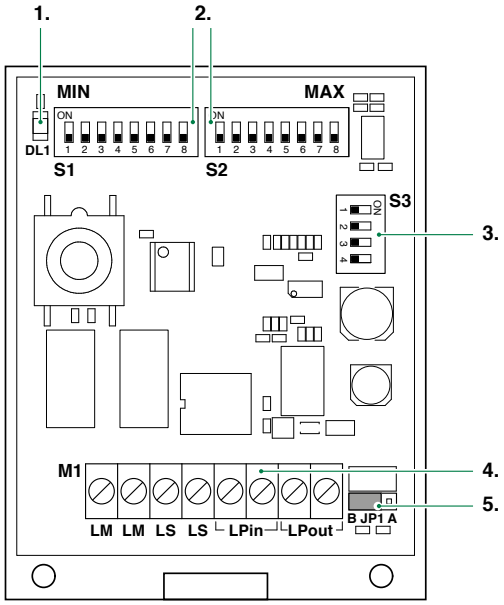

1. **DL1** indicator LED

off: switching device on secondary external unit

lit steadily: switching device on main external unit

flashing: LP line missing or shorted/reset (only with R.I. 002)

2. Microswitches **S1**, **S2** for setting the range of user or zone addresses

3. Microswitches **S3**

DIP 1, 2 for selecting the operating mode

Mode	DIP1	DIP2
Standard (default)	OFF	OFF
TOP1	ON	OFF
TOP2	ON	ON
TOP3	OFF	ON

DIP3 for zone address management

- **OFF** for zone addresses from 1 to 250 (default)
- **ON** for zone addresses from 251 to 500

DIP4 for managing connection on the LS line

- **OFF** external unit on the LS section (default)
- **ON** no external unit on the LS section (power supply unit Art. 1209 or Art. 1210 required)

If there is no secondary external unit, set DIP4 to ON.

4. Terminal block **M1**

LM LM riser Bus line output

LS LS secondary Bus line input normally switched to LM LM (with DIP4 of S3 to OFF) or power supply Art. 1209/1210 input (with DIP4 of S3 to ON)

LPin LPin main Bus line input (normally open on LM LM)

LPout LPout main Bus line for cascade distribution

5. **JP1** video closing jumper.

in position A for all Art. 1404 if star type system configuration is used

in position A for only the last Art. 1404 if cascade type system configuration is used

in position B in all other cases

Art. 1404 must be wired with Art. 1209/1210 or exiting the mixer Art. 4888C.

The maximum number of switching devices Art. 1404 that can be connected to Art. 1210 or Art. 4888C is 40 units.

Connections

1404 connections

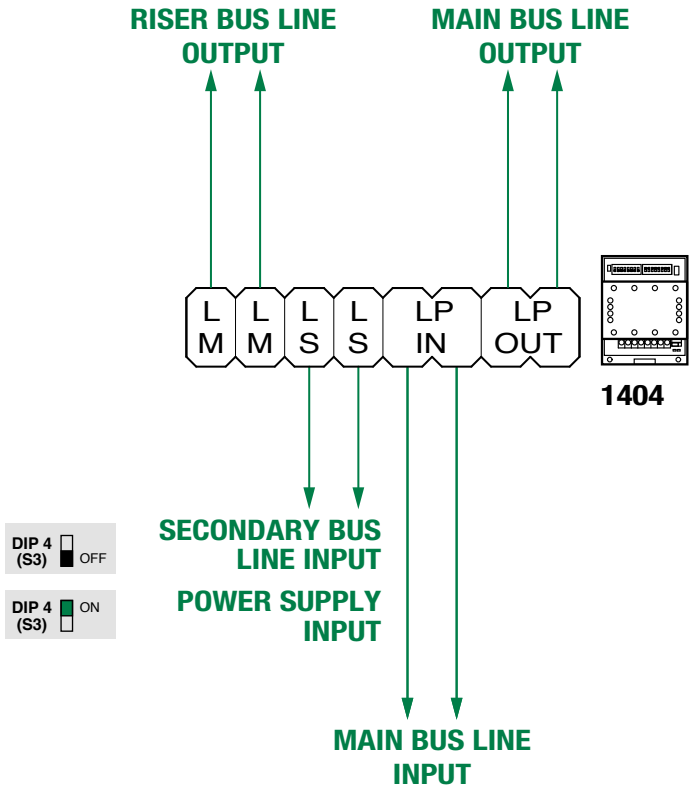

Operation and Programming

Switching device Art. 1404 includes 4 operating modes; the mode should be selected based on the type and position of the switching device in that same system:

STANDARD (for use in kit systems which require the addition of extra external units and in "**non**-TOP" systems).

TOP 1 (single zone switching in systems with no switchboard or with only one switchboard).

TOP 2 (single zone switching in multi-switchboard systems).

TOP 3 (multi-zone switching).

Standard mode (default)

To set STANDARD mode:

1. Set DIP1 and DIP2 of S3 to **OFF**.
2. Define the range of codes managed by each riser:

   S1 defines the minimum value MIN of the range (see **"Programming table for dip-switches and S3 setting"**).

   S2 defines the maximum value MAX of the range (see **"Programming table for dip-switches and S3 setting"**).

CAUTION! Separate switching devices must manage code ranges which are not overlapping.

TOP 1 mode

To set TOP 1 mode:

1. Position the **DIP switches of S3** as follows: DIP1-**ON** and DIP2-**OFF**.
2. Define the system area (called ZONE), using **S1** and **DIP3 of S3**:

   S1 defines the address (in accordance with **"Programming table for dip-switches and S3 setting"**). The address is a number between 1 and 500 inclusive, and cannot be a range.

   DIP3 of S3 defines the zone addresses managed:

   - **OFF** for zone addresses from 1 to 250 (default)
   - **ON** for zone addresses from 251 to 500

The LM-LM output of each switching device can be wired (as for a normal Simplebus Color system) with up to 240 users and with accessories (Art. 1256, Art. 1409); **NOT the porter switchboard Art. 1998A or Art. 1998VC**.

The LS-LS input of the switching device can be wired with ports in STANDARD mode and accessories (Art. 1256, Art. 1409).

On the LPin-LPin input, the ports wired directly or indirectly via mixer 4888C must be set to TOP mode. Mixer 4888C allows installation of a single switchboard **Art. 1998A or Art. 1998VC** in SERIES or PARALLEL (see corresponding manual). All switchboard calls from door-entry phones or monitors are addressed only to the switchboard in the system.

Internal ignition CANNOT be managed via wired ports on the LPin-LPin input of switching device Art. 1404.

CAUTION! There cannot be 2 switching devices Art. 1404 with the same ZONE address in the same system.

TOP 2 mode

Mode not yet available.

TOP 3 mode

To set TOP 3 mode:

1. Position the **DIP switches of S3** as follows: DIP1-**OFF** and DIP2-**ON**.
2. Define the range of ZONES managed by the switching device, via **S1**, **S2** and **DIP3 of S3**:

   S1 defines the minimum value MIN of the range (see **"Programming table for dip-switches and S3 setting"**).

   S2 defines the maximum value MAX of the range (see **"Programming table for dip-switches and S3 setting"**).

DIP3 of S3 defines the zone addresses managed:

- **OFF** for zone addresses from 1 to 250 (default)
- **ON** for zone addresses from 251 to 500

The switching device should be used to wire all the main ports in the part of the system feeding into the terminals **LPin-LPin** of switching devices Art. 1404 in TOP 1 or TOP 2 mode. Switching device Art. 1404 in TOP 3 mode manages the ZONES falling within the set range.

The range can be **EXTENDED** (**from 1 to 500** by setting the dip switches of S1 to OFF, the dip switches of S2 to ON and DIP 3 of S3 to OFF) or **LIMITED** but only in intervals **between 1 and 250** (by setting the MIN range on S1, the MAX range on S2 and DIP 3 of S3 to OFF) **or from 251 to 500** (by setting the MIN range on S1, the MAX range on S2 and DIP 3 of S3 to ON).

Only external units in TOP mode can be wired to the TOP 3 switching device.

Internal ignition CANNOT be managed via wired ports on the LPin-LPin input of switching device Art. 1404.

CAUTION! Separate switching devices must manage code ranges which are not overlapping.

Examples

MODE	EXAMPLES	
STANDARD	RANGE 1-10	
TOP 1	ZONE 2	
TOP 3	EXTENDED RANGE 1-500	
	ZONE 2-10	
	ZONE 300-400	

Special programmes

For each of the previous 4 modes the following is also possible:

- **Bus line cascade distribution**
  - ▶ **JP1** should be left in position **A** only on the last switching device.
- **Management of connection on the LS line,** useful for distributing the video signal in cascade over TOP systems, also without requiring one or more secondary external units.
  - ▶ If there is no secondary external unit, set **DIP4 of S3 to ON** provide power over LS via Art. 1209 or 1210.

Comelit

Programming table for dip-switches and S3 setting

User code/ zone		DIP SWITCH ON	User code/ zone		DIP SWITCH ON	User code/ zone		DIP SWITCH ON	User code/ zone		DIP SWITCH ON
 S3	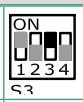 S3		 S3	 S3		 S3	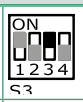 S3		 S3	 S3	
1	**251**	1	**64**	**314**	7	**127**	**377**	1,2,3,4,5,6,7	**190**	**440**	2,3,4,5,6.8
2	**252**	2	**65**	**315**	1.7	**128**	**378**	8	**191**	**441**	1,2,3,4,5,6,8
3	**253**	1.2	**66**	**316**	2.7	**129**	**379**	1.8	**192**	**442**	7.8
4	**254**	3	**67**	**317**	1,2,7	**130**	**380**	2.8	**193**	**443**	1,7,8
5	**255**	1.3	**68**	**318**	3.7	**131**	**381**	1,2,8	**194**	**444**	2,7,8
6	**256**	2.3	**69**	**319**	1,3,7	**132**	**382**	3.8	**195**	**445**	1,2,7,8
7	**257**	1,2,3	**70**	**320**	2,3,7	**133**	**383**	1,3,8	**196**	**446**	3,7,8
8	**258**	4	**71**	**321**	1,2,3,7	**134**	**384**	2,3,8	**197**	**447**	1,3,7,8
9	**259**	1.4	**72**	**322**	4.7	**135**	**385**	1,2,3,8	**198**	**448**	2,3,7,8
10	**260**	2.4	**73**	**323**	1,4,7	**136**	**386**	4.8	**199**	**449**	1,2,3,7,8
11	**261**	1,2,4	**74**	**324**	2,4,7	**137**	**387**	1,4,8	**200**	**450**	4,7,8
12	**262**	3.4	**75**	**325**	1,2,4,7	**138**	**388**	2,4,8	**201**	**451**	1,4,7,8
13	**263**	1,3,4	**76**	**326**	3,4,7	**139**	**389**	1,2,4,8	**202**	**452**	2,4,7,8
14	**264**	2,3,4	**77**	**327**	1,3,4,7	**140**	**390**	3,4,8	**203**	**453**	1,2,4,7,8
15	**265**	1,2,3,4	**78**	**328**	2,3,4,7	**141**	**391**	1,3,4,8	**204**	**454**	3,4,7,8
16	**266**	5	**79**	**329**	1,2,3,4,7	**142**	**392**	2,3,4,8	**205**	**456**	1,3,4,7,8
17	**267**	1.5	**80**	**330**	5.7	**143**	**393**	1,2,3,4,8	**206**	**456**	2,3,4,7,8
18	**268**	2.5	**81**	**331**	1,5,7	**144**	**394**	5.8	**207**	**457**	1,2,3,4,7.8
19	**269**	1,2,5	**82**	**332**	2,5,7	**145**	**395**	1,5,8	**208**	**458**	5,7,8
20	**270**	3.5	**83**	**333**	1,2,5,7	**146**	**396**	2,5,8	**209**	**459**	1,5,7,8
21	**271**	1,3,5	**84**	**334**	3,5,7	**147**	**397**	1,2,5,8	**210**	**460**	2,5,7,8
22	**272**	2,3,5	**85**	**335**	1,3,5,7	**148**	**398**	3,5,8	**211**	**461**	1,2,5,7,8
23	**273**	1,2,3,5	**86**	**336**	2,3,5,7	**149**	**399**	1,3,5,8	**212**	**462**	3,5,7,8
24	**274**	4.5	**87**	**337**	1,2,3,5,7	**150**	**400**	2,3,5,8	**213**	**463**	1,3,5,7,8
25	**275**	1,4,5	**88**	**338**	4,5,7	**151**	**401**	1,2,3,5,8	**214**	**464**	2,3,5,7,8
26	**276**	2,4,5	**89**	**339**	1,4,5,7	**152**	**402**	4,5,8	**215**	**465**	1,2,3,5,7.8
27	**277**	1,2,4,5	**90**	**340**	2,4,5,7	**153**	**403**	1,4,5,8	**216**	**466**	4,5,7,8
28	**278**	3,4,5	**91**	**341**	1,2,4,5,7	**154**	**404**	2,4,5,8	**217**	**467**	1,4,5,7,8
29	**279**	1,3,4,5	**92**	**342**	3,4,5,7	**155**	**405**	1,2,4,5,8	**218**	**468**	2,4,5,7,8
30	**280**	2,3,4,5	**93**	**343**	1,3,4,5,7	**156**	**406**	3,4,5,8	**219**	**469**	1,2,4,5,7.8
31	**281**	1,2,3,4,5	**94**	**344**	2,3,4,5,7	**157**	**407**	1,3,4,5,8	**220**	**470**	3,4,5,7,8
32	**282**	6	**95**	**345**	1,2,3,4,5.7	**158**	**408**	2,3,4,5,8	**221**	**471**	1,3,4,5,7.8
33	**283**	1.6	**96**	**346**	6.7	**159**	**409**	1,2,3,4,5.8	**222**	**472**	2,3,4,5,7.8
34	**284**	2.6	**97**	**347**	1,6,7	**160**	**410**	6.8	**223**	**473**	1,2,3,4,5,7,8
35	**285**	1,2,6	**98**	**348**	2,6,7	**161**	**411**	1,6,8	**224**	**474**	6,7,8
36	**286**	3.6	**99**	**349**	1,2,6,7	**162**	**412**	2,6,8	**225**	**475**	1,6,7,8
37	**287**	1,3,6	**100**	**350**	3,6,7	**163**	**413**	1,2,6,8	**226**	**476**	2,6,7,8
38	**288**	2,3,6	**101**	**351**	1,3,6,7	**164**	**414**	3,6,8	**227**	**477**	1,2,6,7,8
39	**289**	1,2,3,6	**102**	**352**	2,3,6,7	**165**	**415**	1,3,6,8	**228**	**478**	3,6,7,8
40	**290**	4.6	**103**	**353**	1,2,3,6,7	**166**	**416**	2,3,6,8	**229**	**479**	1,3,6,7,8
41	**291**	1,4,6	**104**	**354**	4,6,7	**167**	**417**	1,2,3,6,8	**230**	**480**	2,3,6,7,8
42	**292**	2,4,6	**105**	**355**	1,4,6,7	**168**	**418**	4,6,8	**231**	**481**	1,2,3,6,7.8
43	**293**	1,2,4,6	**106**	**356**	2,4,6,7	**169**	**419**	1,4,6,8	**232**	**482**	4,6,7,8
44	**294**	3,4,6	**107**	**357**	1,2,4,6,7	**170**	**420**	2,4,6,8	**233**	**483**	1,4,6,7,8
45	**295**	1,3,4,6	**108**	**358**	3,4,6,7	**171**	**421**	1,2,4,6,8	**234**	**484**	2,4,6,7,8
46	**296**	2,3,4,6	**109**	**359**	1,3,4,6,7	**172**	**422**	3,4,6,8	**235**	**485**	1,2,4,6,7.8
47	**297**	1,2,3,4,6	**110**	**360**	2,3,4,6,7	**173**	**423**	1,3,4,6,8	**236**	**486**	3,4,6,7,8
48	**298**	5.6	**111**	**361**	1,2,3,4,6.7	**174**	**424**	2,3,4,6,8	**237**	**487**	1,3,4,6,7.8
49	**299**	1,5,6	**112**	**362**	5,6,7	**175**	**425**	1,2,3,4,6.8	**238**	**488**	2,3,4,6,7.8
50	**300**	2,5,6	**113**	**363**	1,5,6,7	**176**	**426**	5,6,8	**239**	**489**	1,2,3,4,6,7,8
51	**301**	1,2,5,6	**114**	**364**	2,5,6,7	**177**	**427**	1,5,6,8	**240**	**490**	5,6,7,8
52	**302**	3,5,6	**115**	**365**	1,2,5,6,7	**178**	**428**	2,5,6,8	**241**	**491**	1,5,6,7,8
53	**303**	1,3,5,6	**116**	**366**	3,5,6,7	**179**	**429**	1,2,5,6,8	**242**	**492**	2,5,6,7,8
54	**304**	2,3,5,6	**117**	**367**	1,3,5,6,7	**180**	**430**	3,5,6,8	**243**	**493**	1,2,5,6,7.8
55	**305**	1,2,3,5,6	**118**	**368**	2,3,5,6,7	**181**	**431**	1,3,5,6,8	**244**	**494**	3,5,6,7,8
56	**306**	4,5,6	**119**	**369**	1,2,3,5,6.7	**182**	**432**	2,3,5,6,8	**245**	**495**	1,3,5,6,7.8
57	**307**	1,4,5,6	**120**	**370**	4,5,6,7	**183**	**433**	1,2,3,5,6.8	**246**	**496**	2,3,5,6,7.8
58	**308**	2,4,5,6	**121**	**371**	1,4,5,6,7	**184**	**434**	4,5,6,8	**247**	**497**	1,2,3,5,6,7,8
59	**309**	1,2,4,5,6	**122**	**372**	2,4,5,6,7	**185**	**435**	1,4,5,6,8	**248**	**498**	4,5,6,7,8
60	**310**	3,4,5,6	**123**	**373**	1,2,4,5,6.7	**186**	**436**	2,4,5,6,8	**249**	**499**	1,4,5,6,7.8
61	**311**	1,3,4,5,6	**124**	**374**	3,4,5,6,7	**187**	**437**	1,2,4,5,6.8	**250**	**500**	2,4,5,6,7.8
62	**312**	2,3,4,5,6	**125**	**375**	1,3,4,5,6.7	**188**	**438**	3,4,5,6,8			
63	**313**	1,2,3,4,5.6	**126**	**376**	2,3,4,5,6.7	**189**	**439**	1,3,4,5,6.8			

Technical specifications

GENERAL INFO	
Product height (mm)	83
Product width (mm)	66
Product depth (mm)	37
Operating temperature (°C)	0÷40

MOUNTING/INSTALLATION	
DIN rail mounted	Yes
DIN modules (no.)	4

AUDIO/VIDEO SPECIFICATIONS	
Audio system	Yes
Audio/video system	Yes

ELECTRICAL SPECIFICATIONS	
Power supply voltage (V)	12Vac / 22Vdc

System performance and layouts

For further information of system performance and to view installation layouts, click on the system type that best meets your requirements:

- **Audio/video kit** for the creation of audio-video systems for *individual residences*.
- **Building Kit audio/video system** for the creation of audio-video systems for *small apartment blocks.*
- **SBTOP audio/video system** for the creation of audio-video systems for *residential complexes.*
- **Audio kit** for the creation of audio systems for *individual residences*.
- **SB2 audio system** for the creation of audio systems for *residential complexes.*

Table of contents

Warning

Description 655

Technical features 655

Connection 656

Operating mode 656

System performance and layouts 656

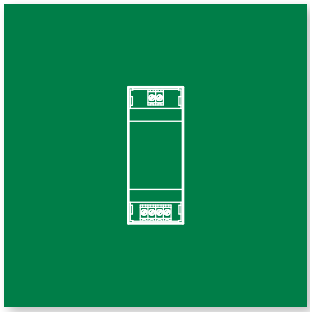

Video Kit Art. 1405 switching device

Description

Switching device for video kit systems with a maximum of 2 entrances with Quadra external unit.

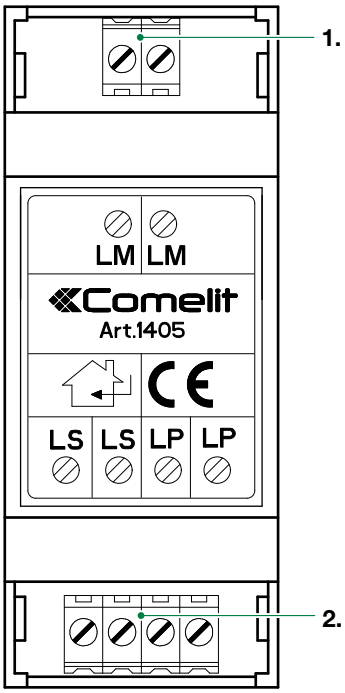

1. **LM LM** riser bus line for 1209 connection
2. **LS | LS** secondary bus line for secondary external unit connection
   LP | LP main bus line for main external unit connection

Technical features

MAIN FEATURES	
Product height (mm)	58
Product width (mm)	35
Product depth (mm)	90
Operating temperature (°C)	-25 ÷ 40
RH max operating humidity (%)	25 ÷ 75
DIN rail mounted	Yes
DIN modules (no.)	2
Power supply voltage (V)	Bus line

GENERAL DATA	
Type of finish	Plastic
Product colour	White

COMPATIBILITY	
Kit audio/video system	Yes

Connection

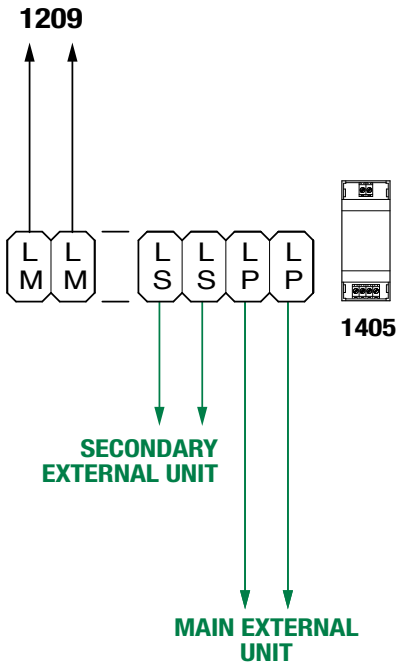

Operating mode

With the switching device Art. 1405 it is possible to install only 1 main external unit and 1 secondary external unit.

In **“Main external unit”** mode, lock release (or actuator) commands are only executed if the external unit is in call or self-ignition mode. The “door-open” function is always deactivated.

In **“Secondary external unit”** mode, lock release (or actuator) commands are executed if the system is in standby mode or if the external unit is active.

If the system is in standby mode the first self-ignition command will activate the camera of the secondary external unit. Further commands will toggle between the external units, activating alternately the main external unit and the secondary external unit.

System performance and layouts

For further information of system performance and to view installation layouts, click on the system type that best meets your requirements:

- Audio/video kit for the creation of audio-video systems for individual residences.

Table of contents

Warning

Description 659

Connection 660

Operation and Programming 660

- Standard mode 660
- TOP 1 mode (default mode) 661
- TOP 2 mode 661
- TOP 3 mode 661
- Example: 662
- Special functions 662
- Programming table for dip-switches and JP2 setting 663

Technical features 664

System performance and layouts 664

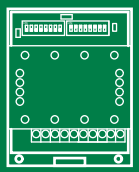

Digital switching module Art. 1424

Description

Art. 1424 is an audio/video switching module which can be used in SBTOP audio/video systems and SB1 audio systems. To be used in systems with more than one entrance.

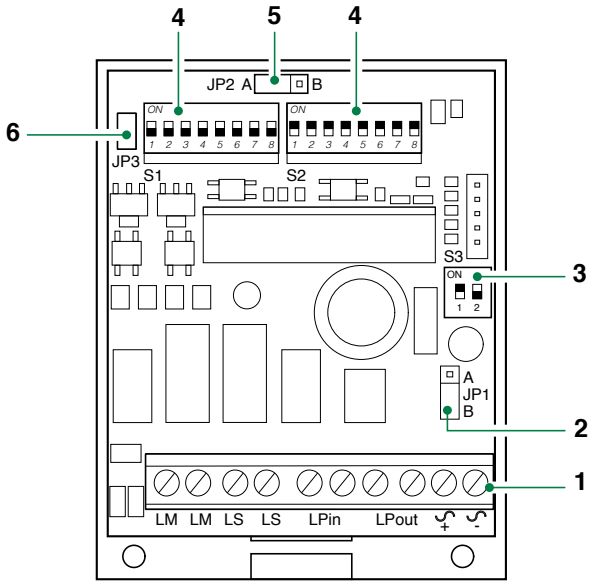

1. System connection terminals:
LM LM riser Bus line output
LS LS secondary Bus line input (normally switched to LM LM)
LPin LPin main Bus line input (normally open on LM LM)
LPout LPout main Bus line output for cascade distribution setup
~ + ~ - 12Vac/20Vdc power supply input.

2 **JP1** controls the self-powering function of the secondary line:
in position, **A**, the function is active
in position **B**, the function is inactive (default setting).

3 Microswitches **S3** are used to select the operating mode (set by default to TOP 1, see **TOP 1 mode (default mode)**).

Mode	DIP1	DIP2
Standard	OFF	OFF
TOP1 (default)	ON	OFF
TOP2	ON	ON
TOP3	OFF	ON

4 Microswitches **S1, S2** are used to set user or zone addresses.

5 **JP2** controls zone addresses:
position **A** for zone addresses from 1 to 250 (default setting)
position **B** for zone addresses from 251 to 500.

6 **JP3** jumper for video closure.

It should be left activated, on the last switching device in a system with cascade distribution setup, and on all switching devices in systems with star distribution setup (see **SBTOP audio/video system**).

Connection

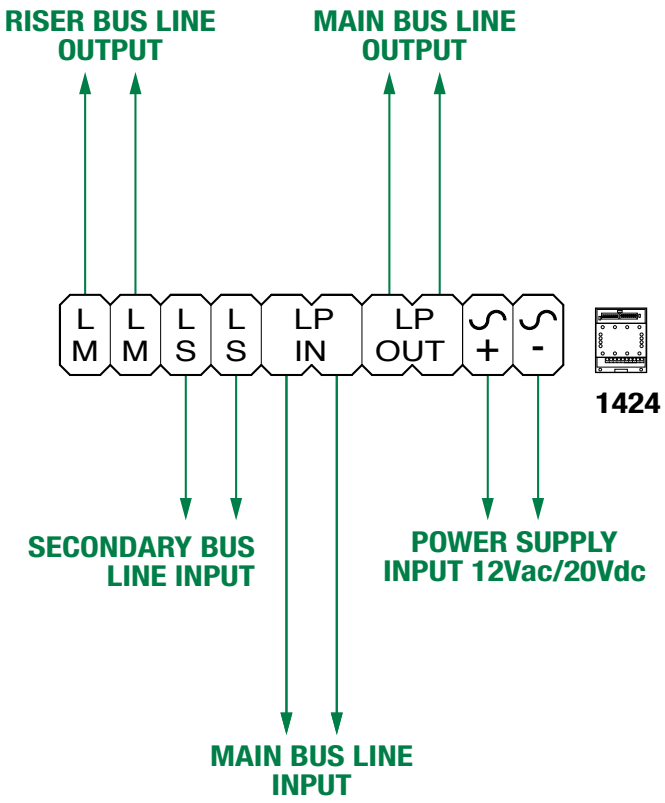

Operation and Programming

Switching device Art. 1424 is used to create Simplebus systems with over 240 users, up to a maximum of 120, 000. It also optimises the connection topology for the part of the system before the mixers Art. 4888 and Art. 4888C. It can also be used to create multi-villa systems with entrances and porter switchboards; centralising up to 500 Comelit Simplebus KITS. Furthermore, the device also makes it possible to control several switchboards within a system and offers alarm signalling to those particular switchboards.

Switching device Art. 1424 has 4 operating modes, selected in accordance with the type of device used and its position within the system:

STANDARD identical to that of Art. 1224A

TOP 1 individual zone switching in systems without switchboard or with a single switchboard

TOP 2 individual zone switching in systems with multiple switchboards

TOP 3 multi-zone switching

Standard mode

For STANDARD mode operation, set the S3 dip switches to OFF.

Each switching module is equipped with a pair of dip switches with 8 selectors:

S1 defines the minimum value **MIN** of the range
S2 defines the maximum value **MAX** of the range of user codes controlled by each riser.
For information on setting the desired values, refer to the Programming table for dip-switches.

CAUTION! Separate switching devices must manage code ranges which are not overlapping.

TOP 1 mode (default mode)

For TOP 1 mode operation, set the S3 dip switches as follows:
DIP 1- ON DIP 2- OFF

The switching device defines an area of the system (called a ZONE) which is identified by the address set by means of the **S1** dip switch selectors and the positioning of **JP2**.

The address is a number between 1 and 500, and cannot be a range; the zone address is set using dip switch S1 (in accordance with the **Programming table for dip-switches**) and **JP2**, which should be set to **A** for managing addresses from 1 to 250, or to **B** for addresses from 251 to 500.

The LM-LM output of each switching device may be wired (as for a normal Simplebus Color system) with up to 240 users with mixers Art. 4888C and accessories (Art. 1256, Art. 1259C, 1224A, 1257); NOT the porter switchboard Art. 1998A or Art. 1998VC.

The LS-LS input of the switching device may be wired with entrances in STANDARD mode and accessories (Art. 1256, Art. 1259C, 1224A, 1257).

On the LPin-LPin input, the wired entrances must be set to TOP mode and a single switchboard Art. 1998A or Art. 1998VC may be installed (in SINGLE, SERIES or PARALLEL mode). All calls to the switchboard from door-entry phones or monitors are directed to the only switchboard in the system. It is NOT possible to control internal ignition via entrances wired to the LPin-LPin input of switching device Art. 1424.

CAUTION! The same system cannot contain 2 switching devices Art. 1424 with the same ZONE address.

TOP 2 mode

For TOP 2 mode operation, set the S3 dip switches as follows:
DIP 1- ON DIP 2- ON

The switching device defines an area of the system (called a ZONE) which is identified by the address set by means of the **S1** dip switch selectors and the positioning of **JP2**.

The address is a number between 1 and 500, and cannot be a range; the zone address is set using dip switch **S1** (in accordance with the **Programming table for dip-switches**) and **JP2**, which should be set to **A** for managing addresses from 1 to 250, or to **B** for addresses from 251 to 500.

The LM-LM output of each switching device may be wired with up to 240 users with mixers Art. 4888C, accessories (Art. 1256, Art. 1259, 1224A, 1257) AND a porter switchboard Art. 1998A or Art. 1998VC.

The LS-LS input of the switching device may be wired with secondary entrances in STANDARD mode and accessories.

On the LPin-LPin input, the wired entrances must be set to TOP mode and up to two main switchboards Art. 1998A or Art. 1998VC may be installed (in SERIES or PARALLEL mode). Door-entry phones and monitors may call the secondary switchboard on its own riser, or the main switchboard, in differentiated mode. It is NOT possible to control internal ignition via entrances wired to the **LPin-LPin** input of switching device Art. 1424.

CAUTION! The same system cannot contain 2 switching devices Art. 1424 with the same ZONE address.

TOP 3 mode

For TOP 3 mode operation, set the S3 dip switches as follows:
DIP 1- OFF DIP 2- ON

The switching device should be used to wire all the main entrances in the part of the system leading into the **LPin-LPin** terminals of switching devices Art. 1424 in TOP 1 or TOP 2 mode. Switching device Art. 1424 in TOP 3 mode controls the ZONES covered by the set range. The ranges are set using dip switch S1, S2 (in accordance with the **Programming table for dip-switches**) and **JP2**.

The range may be **EXTENDED** from **1** to **500** (by setting the S1 dip switches to OFF, the S2 dip switches to ON and JP2 to A) or **LIMITED**, but only for the intervals between **1** and **250** (by setting S1 to the MIN range, S2 to the MAX range and JP2 to A) or from **251** to **500** (by setting S1 to the MIN range, S2 to the MAX range and JP2 to B).

CAUTION! Separate switching devices must manage code ranges which are not overlapping.

The TOP 3 switching device may only be wired with external units in TOP mode. In the presence of main porter switchboards Art. 1998A or Art. 1998VC, the TOP 3 switching device should only be installed BEFORE the main switchboard. It is NOT possible to control internal ignition via entrances wired to the LPin-LPin input of switching device Art. 1424.

Example:

STANDARD	S3 	RANGE 1÷10		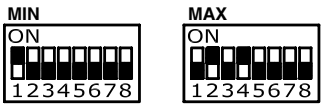	
TOP 1	S3 	ZONE 2	JP2 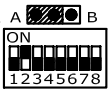 S1	ZONE 260	JP2  S1
TOP 2	S3 	ZONE 3	JP2 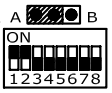 S1	ZONE 261	JP2  S1
TOP 3	S3 	EXTENDED RANGE 1÷500		JP2  S1 S2	
		ZONES 2÷10		JP2  S1 S2	
		ZONES 300÷400		JP2  S1 S2	

Special functions

Each of the previous 4 modes also offer the following options:

- **cascade distribution of the Bus line.**
  - ▶ **JP3** should only be left activated on the last switching device.
- **the self-powering function of the LS-LS input** which makes it possible to control the riser on the output of the LM-LM terminals without requiring a dedicated secondary external unit.
  - ▶ **JP1** should be set to **A** to activate the function.

Comelit

Programming table for dip-switches and JP2 setting

Code- us./ zone		DIP SWITCH ON	Code- us./ zone		DIP SWITCH ON	Code- us./ zone		DIP SWITCH ON	Code- us./ zone		DIP SWITCH ON
A B	A B		A B	A B		A B	A B		A B	A B	
1	251	1	64	314	7	127	377	1,2,3,4,5,6,7	190	440	2,3,4,5,6,8
2	252	2	65	315	1,7	128	378	8	191	441	1,2,3,4,5,6,8
3	253	1,2	66	316	2,7	129	379	1,8	192	442	7,8
4	254	3	67	317	1,2,7	130	380	2,8	193	443	1,7,8
5	255	1,3	68	318	3,7	131	381	1,2,8	194	444	2,7,8
6	256	2,3	69	319	1,3,7	132	382	3,8	195	445	1,2,7,8
7	257	1,2,3	70	320	2,3,7	133	383	1,3,8	196	446	3,7,8
8	258	4	71	321	1,2,3,7	134	384	2,3,8	197	447	1,3,7,8
9	259	1,4	72	322	4,7	135	385	1,2,3,8	198	448	2,3,7,8
10	260	2,4	73	323	1,4,7	136	386	4,8	199	449	1,2,3,7,8
11	261	1,2,4	74	324	2,4,7	137	387	1,4,8	200	450	4,7,8
12	262	3,4	75	325	1,2,4,7	138	388	2,4,8	201	451	1,4,7,8
13	263	1,3,4	76	326	3,4,7	139	389	1,2,4,8	202	452	2,4,7,8
14	264	2,3,4	77	327	1,3,4,7	140	390	3,4,8	203	453	1,2,4,7,8
15	265	1,2,3,4	78	328	2,3,4,7	141	391	1,3,4,8	204	454	3,4,7,8
16	266	5	79	329	1,2,3,4,7	142	392	2,3,4,8	205	456	1,3,4,7,8
17	267	1,5	80	330	5,7	143	393	1,2,3,4,8	206	456	2,3,4,7,8
18	268	2,5	81	331	1,5,7	144	394	5,8	207	457	1,2,3,4,7,8
19	269	1,2,5	82	332	2,5,7	145	395	1,5,8	208	458	5,7,8
20	270	3,5	83	333	1,2,5,7	146	396	2,5,8	209	459	1,5,7,8
21	271	1,3,5	84	334	3,5,7	147	397	1,2,5,8	210	460	2,5,7,8
22	272	2,3,5	85	335	1,3,5,7	148	398	3,5,8	211	461	1,2,5,7,8
23	273	1,2,3,5	86	336	2,3,5,7	149	399	1,3,5,8	212	462	3,5,7,8
24	274	4,5	87	337	1,2,3,5,7	150	400	2,3,5,8	213	463	1,3,5,7,8
25	275	1,4,5	88	338	4,5,7	151	401	1,2,3,5,8	214	464	2,3,5,7,8
26	276	2,4,5	89	339	1,4,5,7	152	402	4,5,8	215	465	1,2,3,5,7,8
27	277	1,2,4,5	90	340	2,4,5,7	153	403	1,4,5,8	216	466	4,5,7,8
28	278	3,4,5	91	341	1,2,4,5,7	154	404	2,4,5,8	217	467	1,4,5,7,8
29	279	1,3,4,5	92	342	3,4,5,7	155	405	1,2,4,5,8	218	468	2,4,5,7,8
30	280	2,3,4,5	93	343	1,3,4,5,7	156	406	3,4,5,8	219	469	1,2,4,5,7,8
31	281	1,2,3,4,5	94	344	2,3,4,5,7	157	407	1,3,4,5,8	220	470	3,4,5,7,8
32	282	6	95	345	1,2,3,4,5,7	158	408	2,3,4,5,8	221	471	1,3,4,5,7,8
33	283	1,6	96	346	6,7	159	409	1,2,3,4,5,8	222	472	2,3,4,5,7,8
34	284	2,6	97	347	1,6,7	160	410	6,8	223	473	1,2,3,4,5,7,8
35	285	1,2,6	98	348	2,6,7	161	411	1,6,8	224	474	6,7,8
36	286	3,6	99	349	1,2,6,7	162	412	2,6,8	225	475	1,6,7,8
37	287	1,3,6	100	350	3,6,7	163	413	1,2,6,8	226	476	2,6,7,8
38	288	2,3,6	101	351	1,3,6,7	164	414	3,6,8	227	477	1,2,6,7,8
39	289	1,2,3,6	102	352	2,3,6,7	165	415	1,3,6,8	228	478	3,6,7,8
40	290	4,6	103	353	1,2,3,6,7	166	416	2,3,6,8	229	479	1,3,6,7,8
41	291	1,4,6	104	354	4,6,7	167	417	1,2,3,6,8	230	480	2,3,6,7,8
42	292	2,4,6	105	355	1,4,6,7	168	418	4,6,8	231	481	1,2,3,6,7,8
43	293	1,2,4,6	106	356	2,4,6,7	169	419	1,4,6,8	232	482	4,6,7,8
44	294	3,4,6	107	357	1,2,4,6,7	170	420	2,4,6,8	233	483	1,4,6,7,8
45	295	1,3,4,6	108	358	3,4,6,7	171	421	1,2,4,6,8	234	484	2,4,6,7,8
46	296	2,3,4,6	109	359	1,3,4,6,7	172	422	3,4,6,8	235	485	1,2,4,6,7,8
47	297	1,2,3,4,6	110	360	2,3,4,6,7	173	423	1,3,4,6,8	236	486	3,4,6,7,8
48	298	5,6	111	361	1,2,3,4,6,7	174	424	2,3,4,6,8	237	487	1,3,4,6,7,8
49	299	1,5,6	112	362	5,6,7	175	425	1,2,3,4,6,8	238	488	2,3,4,6,7,8
50	300	2,5,6	113	363	1,5,6,7	176	426	5,6,8	239	489	1,2,3,4,6,7,8
51	301	1,2,5,6	114	364	2,5,6,7	177	427	1,5,6,8	240	490	5,6,7,8
52	302	3,5,6	115	365	1,2,5,6,7	178	428	2,5,6,8	241	491	1,5,6,7,8
53	303	1,3,5,6	116	366	3,5,6,7	179	429	1,2,5,6,8	242	492	2,5,6,7,8
54	304	2,3,5,6	117	367	1,3,5,6,7	180	430	3,5,6,8	243	493	1,2,5,6,7,8
55	305	1,2,3,5,6	118	368	2,3,5,6,7	181	431	1,3,5,6,8	244	494	3,5,6,7,8
56	306	4,5,6	119	369	1,2,3,5,6,7	182	432	2,3,5,6,8	245	495	1,3,5,6,7,8
57	307	1,4,5,6	120	370	4,5,6,7	183	433	1,2,3,5,6,8	246	496	2,3,5,6,7,8
58	308	2,4,5,6	121	371	1,4,5,6,7	184	434	4,5,6,8	247	497	1,2,3,5,6,7,8
59	309	1,2,4,5,6	122	372	2,4,5,6,7	185	435	1,4,5,6,8	248	498	4,5,6,7,8
60	310	3,4,5,6	123	373	1,2,4,5,6,7	186	436	2,4,5,6,8	249	499	1,4,5,6,7,8
61	311	1,3,4,5,6	124	374	3,4,5,6,7	187	437	1,2,4,5,6,8	250	500	2,4,5,6,7,8
62	312	2,3,4,5,6	125	375	1,3,4,5,6,7	188	438	3,4,5,6,8			
63	313	1,2,3,4,5,6	126	376	2,3,4,5,6,7	189	439	1,3,4,5,6,8			

Technical features

MAIN FEATURES	
Product height (mm)	85
Product width (mm)	60
Product depth (mm)	35
Operating temperature (°C)	5 - 40
DIN rail mounted	Yes
DIN modules (no.)	4
Maximum current absorption (mA)	80

COMPATIBILITY	
Simplebus Top audio/video system	Yes
Simplebus 1 audio system	Yes

AUDIO/VIDEO FEATURES	
Audio system	Yes
Audio/video system	Yes

System performance and layouts

For further information of system performance and to view installation layouts, click on the system type that best meets your requirements:

- **SBTOP audio/video system** for the creation of audio-video systems for *residential complexes.*
- **SB1 audio system** for the creation of audio systems for *residential complexes.*

Table of contents

Warning

Description 667

Technical features 667

Connection 668

Operating mode 669

Example coding of switching device Art. 1224A (staircase A 1 to 10 , staircase B 11 to 20) 669

System performance and layouts 669

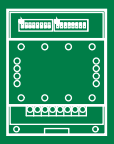

Switching device Art. 1224A

Description

Switching device for audio or audio-video systems with 2 or more doors in SB1 systems and SBTOP audio/video systems. Complete with 2 dip-switches with 8 positions for setting the user range of the riser. 12V AC and 22V DC power supply.

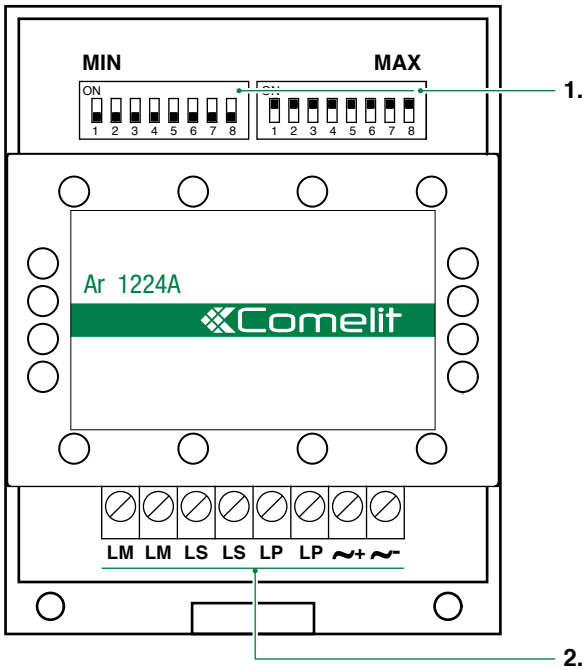

1. **MIN** and **MAX** microswitches define respectively the lowest and highest user codes which can be connected to the riser. (see **"addressing table"**)
2. Terminal block **MR1**

   LM LM riser bus line output

   LS LS secondary bus line

   LP LP main bus line

   ~ + power supply positive

   ~ - power supply negative

Technical features

MAIN FEATURES	
Product height (inch)	3.35
Product width (inch)	2.36
Product depth (inch)	1.38
Operating temperature (°F)	-13 ÷ 104
RH max operating humidity (%)	25 ÷ 75
DIN rail mounted	Yes
DIN modules (no.)	4
Maximum current absorption (mA)	40

GENERAL DATA	
Type of finish	Plastic
Product colour	White

COMPATIBILITY	
Simplebus Top audio/video system ⁜	Yes
Simplebus 1 audio system	Yes

⁜ Where TOP functions are not required

Connection

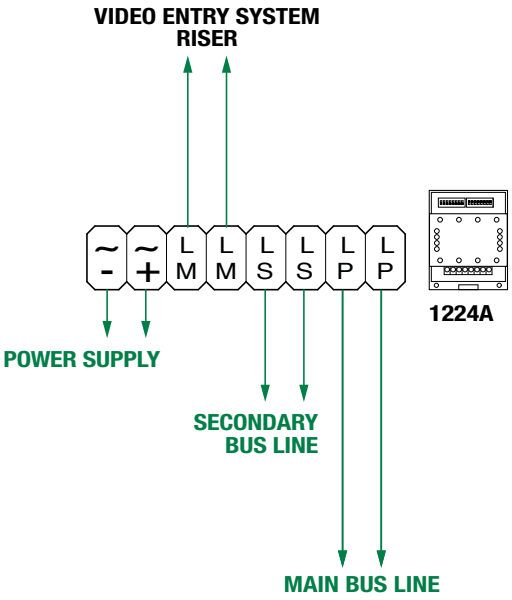
VIDEO ENTRY SYSTEM
RISER
~ -
~ +
L M
L M
L S
L S
L P
L P
1224A
POWER SUPPLY
SECONDARY
BUS LINE
MAIN BUS LINE

Operating mode

Each switching module is equipped with a pair of DIP switches with 8 selectors. The two Dip switches define the MIN and MAX range of codes that can be recognised by the switching device.

CAUTION! Separate switching devices must manage code ranges which are not overlapping.

Example coding of switching device Art. 1224A (staircase A 1 to 10 , staircase B 11 to 20)

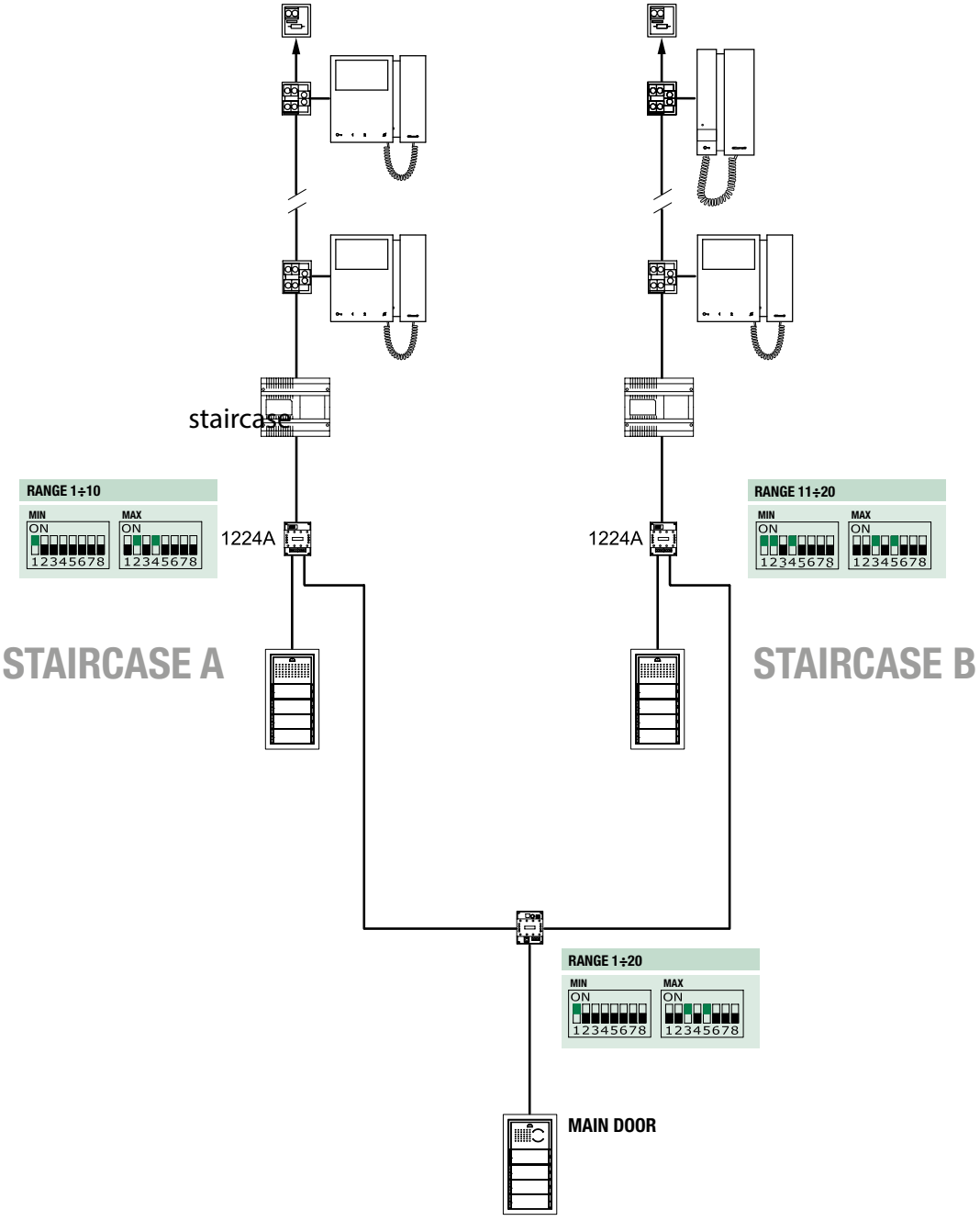

System performance and layouts

For further information of system performance and to view installation layouts, click on the system type that best meets your requirements:

- **SBTOP audio/video system** for the creation of audio-video systems for *residential complexes.*
- **SB1 audio system** for the creation of audio systems for *residential complexes*.

Table of contents

Warning

Description 671

Technical specifications 671

Installation Art.1229A 672

Connections 673

1229A connections 673

System performance and layouts 673

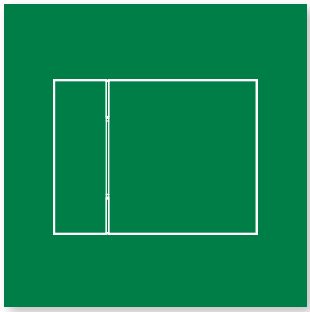

Additional ringtone Art. 1229A

Description

Article 1229A is an audio/video switch unit that can be used in "Building Kit" (exclusively 2-wire), Simplebus Top and Kit Video systems.

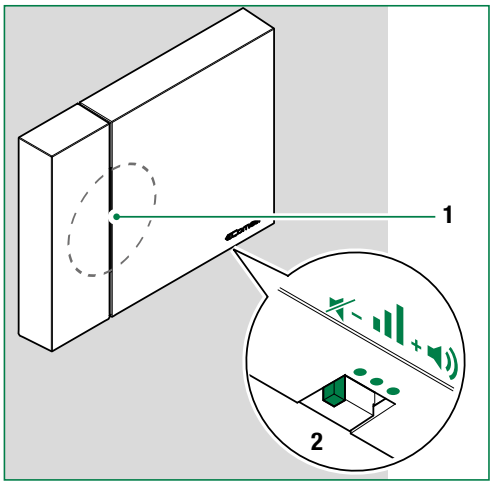

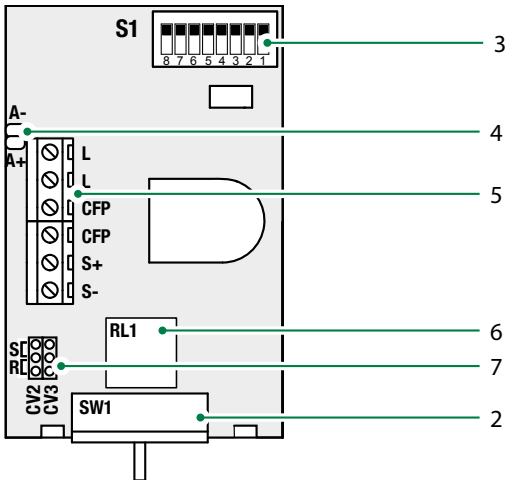

1. Speaker.
2. **SW1** Volume adjustment switch.
   Set the switch to the left to exclude the call ringtone (Privacy function).
3. Switch **S1** for user code programming (see **"addressing table"**).
4. **A-A+** Loudspeaker connector.
5. Terminal block:
   LL bus line connection
   CFP CFP Floor door call input
   S+ S- terminals for call repetition device, or C-NO contacts call repetition relay **RL1**.
6. Ringtone repetition relay, **C-NO** contacts moved to **S+ S-** by moving **CV2** and **CV3** to **R**.
7. Configuration jumpers **CV2** and **CV3**.
   Position **S** for the additional ringtone. Position **R** for the relay.

Art. 1229A DOES NOT work in SB1 systems.

Technical specifications

GENERAL INFO	
Product height (mm)	126
Product width (mm)	96
Product depth (mm)	24

MOUNTING/INSTALLATION	
DIN rail mounted	No
DIN modules (no.)	No

AUDIO/VIDEO SPECIFICATIONS	
Audio system	Yes
Audio/video system	Yes

Installation Art.1229A

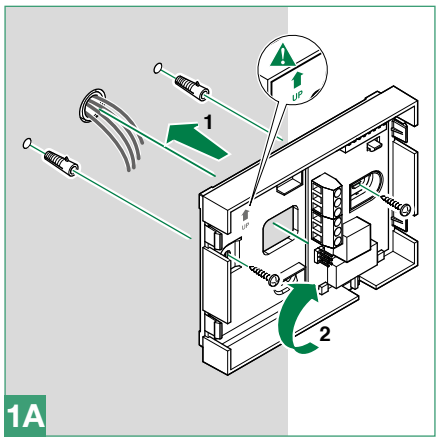

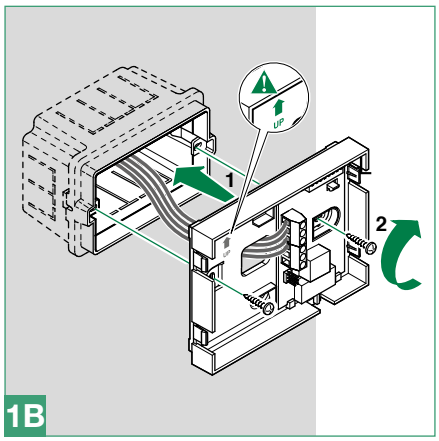

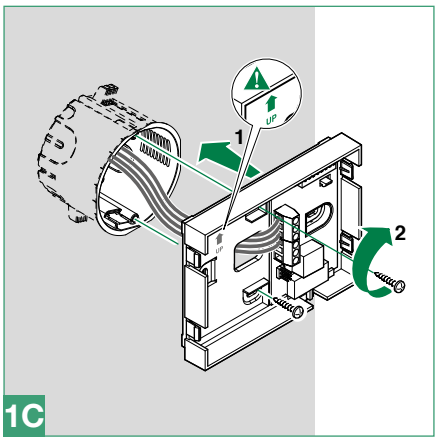

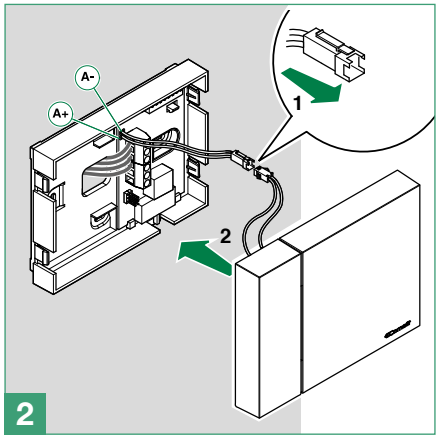

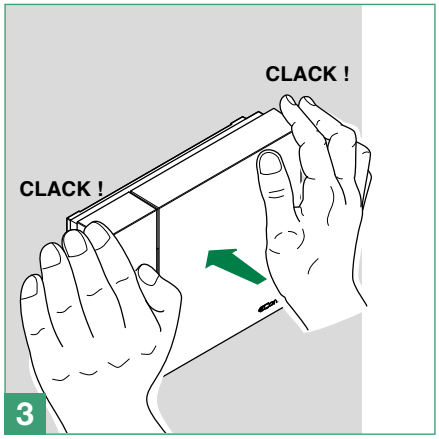

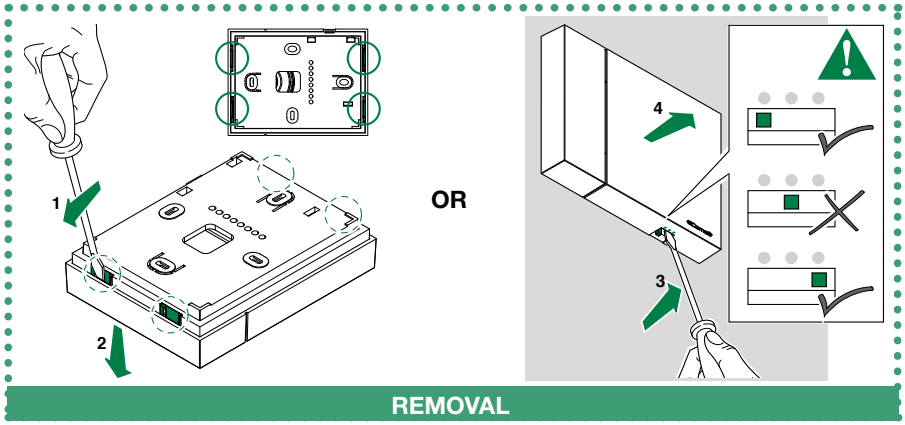

Connections

1229A connections

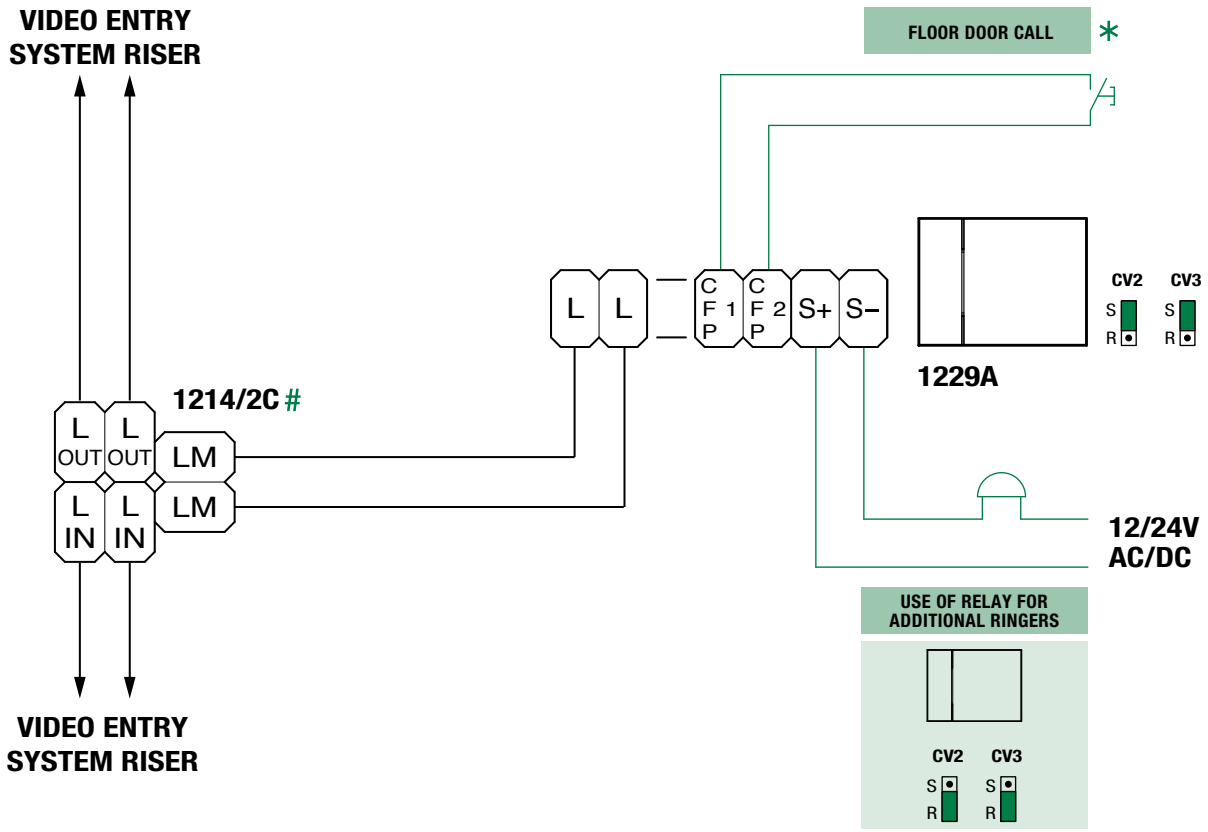

* **20 m MAX** - Use shielded cable for the connection and do not route the cables in the vicinity of heavy inductive loads or power supply cables (230V/400V). Where additional ringers, entry phones or monitor backplates have the same user code, connect the CFP button on one only; all the devices will ring simultaneously.

\# Only required in video systems.

System performance and layouts

For further information of system performance and to view installation layouts, click on the system type that best meets your requirements:

- **Audio/video kit** for the creation of audio-video systems for *individual residences*.
- **Building Kit audio/video system** for the creation of audio-video systems for *small apartment blocks.*
- **SBTOP audio/video system** for the creation of audio-video systems for *residential complexes.*
- **Audio kit** for the creation of audio systems for *individual residences*.
- **SB2 audio system** for the creation of audio systems for *residential complexes.*

Table of contents

Warning

Description 675

Connection 675

Technical features 676

System performance and layouts 676

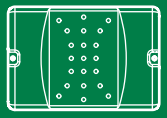

Additional ringer Art. 1229

Description

Additional ringtone for call repetition, which can be controlled directly from terminals S- and S+ in selected monitor and/or entry phone models. Surface-mounted or on domestic series 503 box. Can be used in all systems.

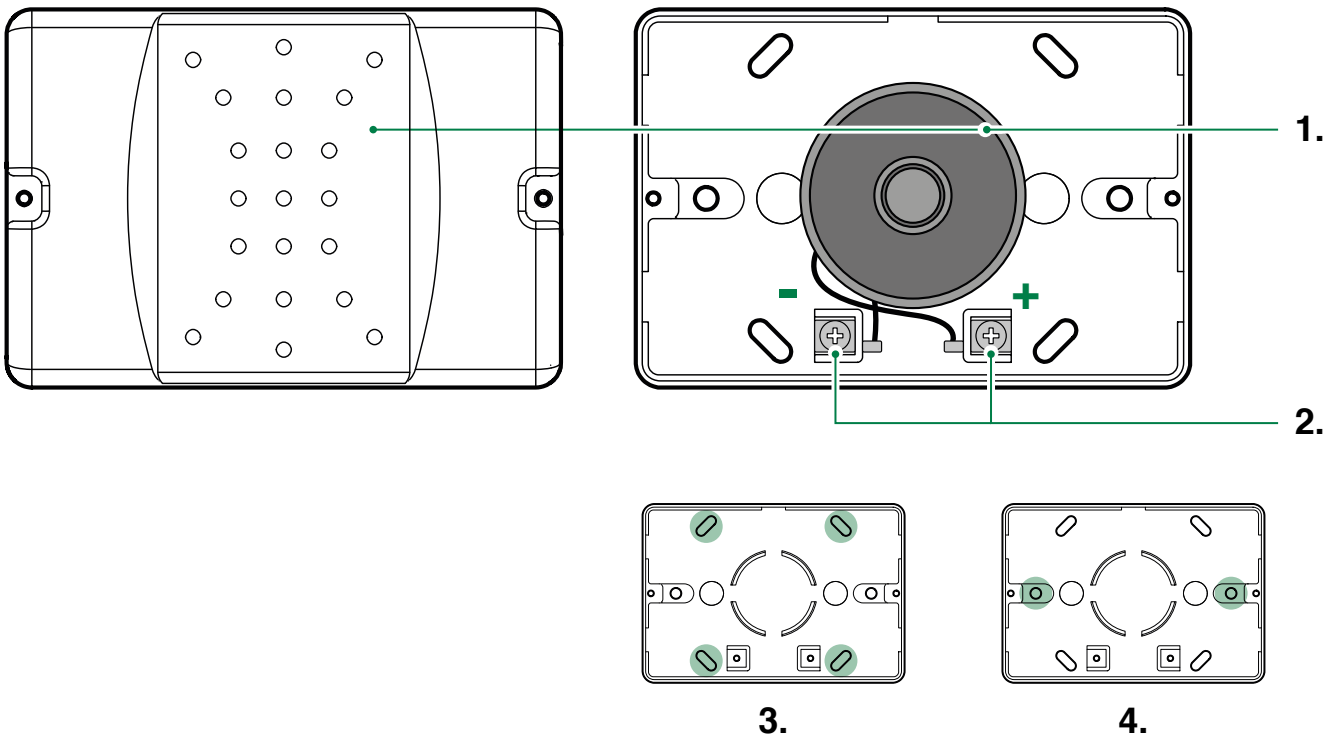

1. Speaker
2. Connectors
3. Wall mounting holes
4. Fixing holes for domestic series 503 box.

Connection

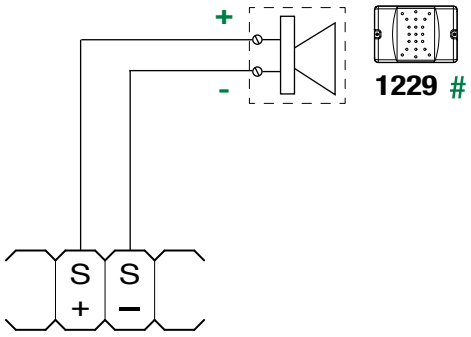

The total number of internal units with the same user code added to the number of call repetition devices connected to these internal units cannot exceed **4.** Connect only one call repetition device for each internal unit. Use shielded cable for the connection and do not route the cables in the vicinity of heavy inductive loads or power supply cables (230V / 400V).

Technical features

MAIN FEATURES	
Product height (mm)	75
Product width (mm)	110
Product depth (mm)	29
Maximum current absorption (mA)	40

GENERAL DATA	
Product colour	White RAL9003

COMPATIBILITY	
Simplebus Top audio/video system	Yes
Building Kit audio/video system	Yes
Simplebus 2 audio system	Yes
Vip system	Yes
Kit audio/video system	Yes
Traditional system	Yes
Semplified system	Yes
Comelbus system	Yes
Comtel system	Yes

MOUNTING/INSTALLATION	
Wall-mounted	Yes

System performance and layouts

For further information of system performance and to view installation layouts, click on the system type that best meets your requirements:

Audio/video kit for the creation of audio-video systems for *individual residences*.

Building Kit audio/video system for the creation of audio-video systems for *small apartment blocks.*

SBTOP audio/video system for the creation of audio-video systems for *residential complexes.*

SB2 audio system for the creation of audio systems for *residential complexes.*

SB1 audio system for the creation of audio systems for *residential complexes.*

Table of contents

Warning

Description 679

Technical specifications 679

Connections 680

1256 connections 680

Operation and Programming 681

A) Call repetition function 681

B) Activation function on switchboard call pushbutton 681

C) External unit light function / Stair light function 681

D) Secondary door lock release function (without external unit) 681

E) Activation function on Actuator pushbutton 682

F) Activation function on Actuator with code pushbutton.
The function may NOT be used in Simplebus Kit systems 682

System performance and layouts 682

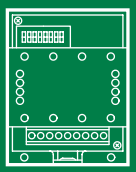

Digital actuator relay accessory Art. 1256

Description

Article 1256 is an intelligent device for controlling a 10A relay (installed) for general uses. It can be used 2-wire Kits, "Building Kit" (exclusively 2-wire), Simplebus TOP systems.

Fit a max. of 10 actuator relay modules art. 1256 on the outgoing bus line to an audio or audio/video external unit. Fit a maximum of 30 actuator relay modules art. 1256 on the outgoing bus line to a mixer/power supply unit art. 4888, 4888C.
To use the actuator relay module in 2-wire Kit systems, "Building Kit" entry phone systems (2 pure wires), Simplebus TOP systems after Art. 4888, 4888C: move jumper JP2, JP3, JP4 to position 2

Technical specifications

GENERAL INFO	
Product height (mm)	83
Product width (mm)	66
Product depth (mm)	37
Operating temperature (°C)	0÷30
MOUNTING/INSTALLATION	
Wall-mounted	No
DIN rail mounted	Yes
DIN modules (no.)	4
AUDIO/VIDEO SPECIFICATIONS	
Audio system	Yes
Audio/video system	Yes
ELECTRICAL SPECIFICATIONS	
Maximum current absorption (mA)	50

Connections

1256 connections

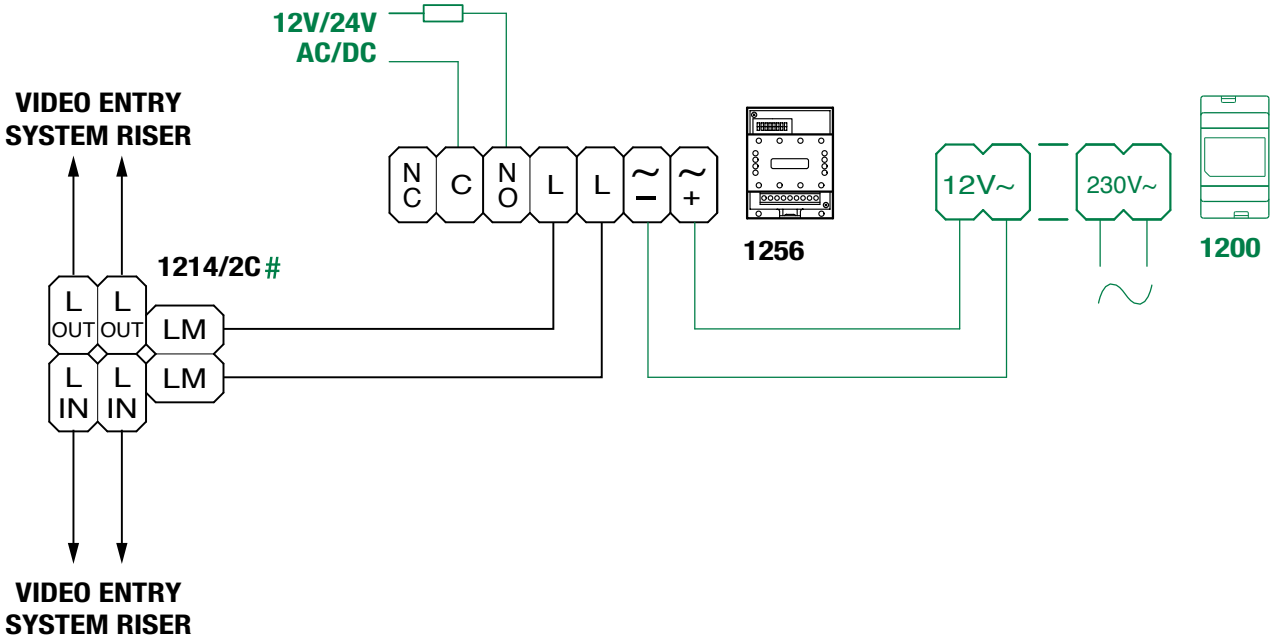

Only required in video systems.

Operation and Programming

Art. 1256 offers the following six functions, depending on the position of jumper JP1:

A) Call repetition function

JP1 as illustrated in Fig. 1

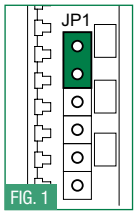

FIG. 1

The relay is operated by closing the C.NO. contact in response to a call from the switchboard, external unit or landing; this happens only if the user code for which you wish to repeat the call is set using the DIP-switch (e.g. to activate lights, ringtones, paging function, CCTV alarm contacts, etc.). On receipt of a call from the external unit or the landing, single closure of the relay takes place. In response to a call from the switchboard, the relay closes twice. Intercom calls are not repeated. The actuator relay module can also be used alone, if you want to close the C.NO. contact rather than repeat the call to an apartment when the external unit calls the user code set on art. 1256. The relay closure time is set to approximately 2 sec. To set the user code by means of a DIP-switch, see **"addressing table"**.

B) Activation function on switchboard call pushbutton

JP1 as illustrated in Fig. 2

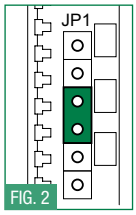

FIG. 2

For use only with systems not equipped with switchboard art. 1998/A. The relay is operated by closing the C.NO. contact in response to a switchboard call from an entry phone or video entry phone (e.g. to activate the following independently, using a specific command: lights, CCTV alarm contacts, driveway gates, entrances without external units or other devices). The relay closure time can be programmed using a DIP-switch (see **table A**). The function can be used only when the system is free.

C) External unit light function / Stair light function

JP1 as illustrated in Fig. 3

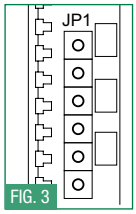

FIG. 3

The relay is operated by closing the C.NO. contact in response to a call from an external unit to any address, on internal ignition from a video entry phone (e.g. to automatically activate lights, CCTV alarm contacts, etc.). The relay closure time can be programmed using a DIP-switch (see **table A**).

D) Secondary door lock release function (without external unit)

JP1 as illustrated in Fig. 4

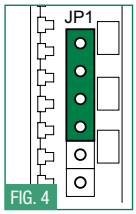

FIG. 4

The relay is activated when the door lock release pushbutton is pressed, if the user code of the entry phone or video entry phone from which the command is sent is within the range defined using DIP-switches - see **table B** (e.g. to activate a second door lock release using the door lock release command for entrances without an external unit). The relay closure time is set to approximately 2 sec.

E) Activation function on Actuator pushbutton

JP1 as illustrated in Fig. 5

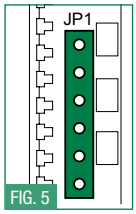

FIG. 5

The relay is operated by closing the C.NO. contact in response to a Generic actuator call from an entry phone or video entry phone (e.g. to activate the following independently, using a specific command: lights, CCTV alarm contacts, driveway gates, entrances without external units or other devices). The relay closure time can be programmed using a DIP-switch (see **table A**). The function can be used at all times except when a conversation is in progress from an entry phone or video entry phone other than your own. All art. 1256 modules set for use with this function are activated simultaneously when the pushbutton on the internal unit is pressed.

F) Activation function on Actuator with code pushbutton. The function may NOT be used in Simplebus Kit systems

JP1 as illustrated in Fig. 6

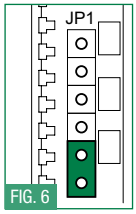

FIG. 6

The relay is operated by closing the C.NO. contact if the pushbutton pressed on the entry phone or video entry phone has been programmed (using the hand-held programmer art. 1251/A) to send the actuator call with the code of the actuator in question (e.g. to activate the following independently, using a specific command: lights, CCTV alarm contacts, driveway gates, entrances without external units or other devices). The closure time of the relay is fixed at 2 sec. the function can be used at all times, except when a conversation is in progress from an entry phone or video entry phone other than your own. To set the user code by means of a DIP-switch, see **"addressing table"**.

TAB. A *programming relay closure time for functions B, C and E*									
DIP switches ON	ALL	1	2	3	4	5	6	7	8
Relay closure time	*	**1''**	**2''**	**4''**	**8''**	**16''**	**32''**	**1' 5''**	**2' 10''**

* The relay for art. 1256 operates in **BISTABLE mode**, changing its status at every command; if the power supply is cut off, it returns to the C.NO. position and remains there, even after the power is restored.
Bistable mode is available for products with a revision index equal to or greater than 003.

TAB. B *programming code Range for function D*								
DIP switches ON	1	2	3	4	5	6	7	8
Enabled codes	1 ÷ 30	31 ÷ 60	61 ÷ 90	91 ÷ 120	121 ÷ 150	151 ÷ 180	181 ÷ 210	211 ÷ 240

System performance and layouts

For further information of system performance and to view installation layouts, click on the system type that best meets your requirements:

- **Audio/video kit** for the creation of audio-video systems for *individual residences*.
- **Building Kit audio/video system** for the creation of audio-video systems for *small apartment blocks.*
- **SBTOP audio/video system** for the creation of audio-video systems for *residential complexes.*
- **Audio kit** for the creation of audio systems for *individual residences*.
- **SB2 audio system** for the creation of audio systems for *residential complexes.*
- **SB1 audio system** for the creation of audio systems for *residential complexes.*

Table of contents

Warning

Description 685

Technical specifications 686

Connections 686

1409 connections 686

Operation and programming 687

Default configuration 687

Programming the number of cameras connected 687

1. Generic actuator mode 687

2. Coded actuator mode 688

3. Mode with external audio unit 688

4. Mode with switchboard 1998A 689

5. Compatibility table for art. 1409 With 1256 or other 1409 units 689

System performance and layouts 689

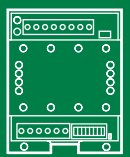

Remote camera module for 2-wire system Art. 1409

Description

Article 1409 is a remote camera module that can be used in “Building Kit” (exclusively 2-wire), Kit Video and Simplebus Top systems (in the SB2 section). Allows management of up to 3 colour cameras in cyclical sequence from door entry monitors using a dedicated button.

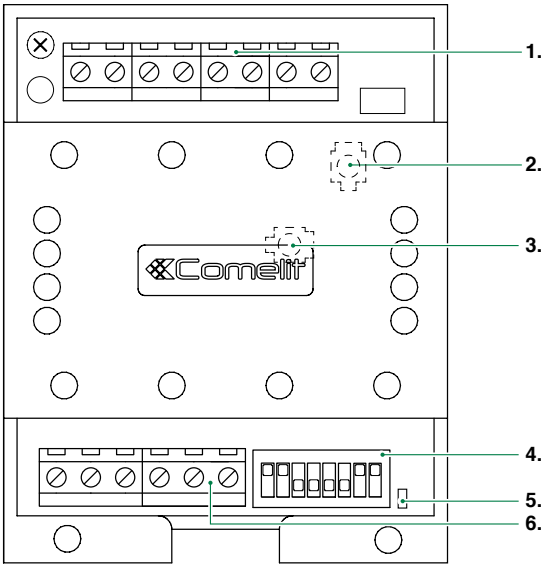

1. Terminal block **M2** for system connection**:**

INA Camera module external control contact

GND Common contact

V1 S1 Coax input camera 1

V2 S2 Coax input camera 2

V3 S3 Coax input camera 3

2. TRIMMER TM2 Controls frequency of video signal modulation (factory set to optimum setting: do not adjust).

3. TRIMMER TM1 Controls amplitude of modulated video signal (factory set to optimum setting: do not adjust).

4. Programming microswitches **S1**.

5. Indicator **LED DL1**

off: no video coming from cameras 1, 2 or 3

on: the video transmitted on the monitor is coming from camera 1, 2 or 3.

6. Terminal block **M1** for system connection:

L OUT L OUT Bus line output

L IN L IN Bus line input

~- ~+ 12 Vac 20 Vdc power supply input.

Technical specifications

GENERAL INFO	
Product height (mm)	83
Product width (mm)	66
Product depth (mm)	37
Operating temperature (°C)	0÷40

MOUNTING/INSTALLATION	
DIN rail mounted	Yes
DIN modules (no.)	4

AUDIO/VIDEO SPECIFICATIONS	
Audio system	No
Audio/video system	Yes

ELECTRICAL SPECIFICATIONS	
Power supply voltage (V)	12Vac / 22Vdc
Maximum current absorption (mA)	220

Connections

1409 connections

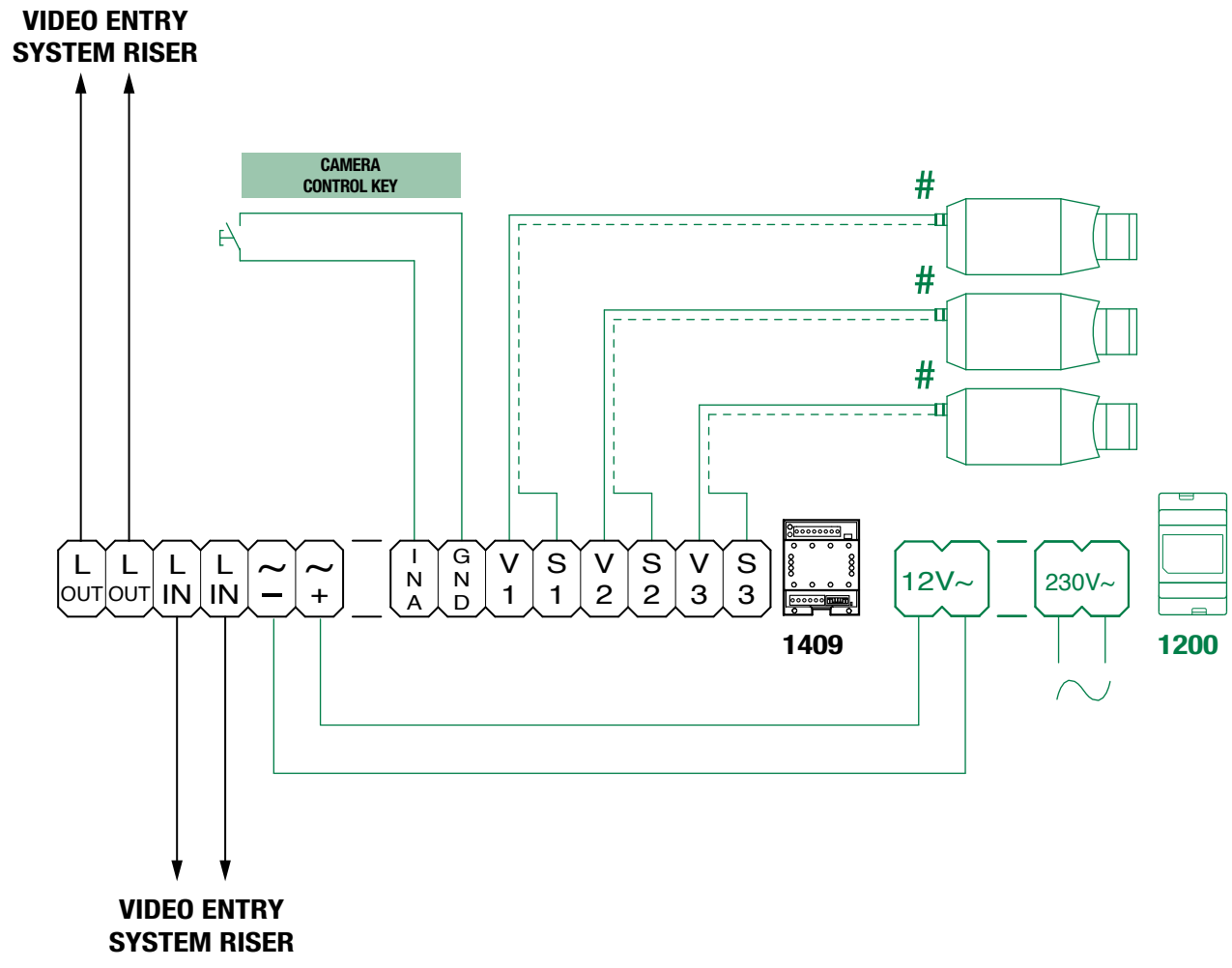

Requires separate power supply.

Operation and programming

Art. 1409 can be used to manage analogue CCTV cameras (up to 3).

Art. 1409 can be used in systems with Art. 1210 or 1209, and in systems with Art. 4888C in the SB2 section (running from mixer power supply unit towards the door entry monitors/door-entry phones).

✓ With monitor on

► Press the programmed button to cycle through all connected cameras, in accordance with the diagram below. Sequential switching can also be activated using a clean contact (C-NO) connected to the INA – GND input.

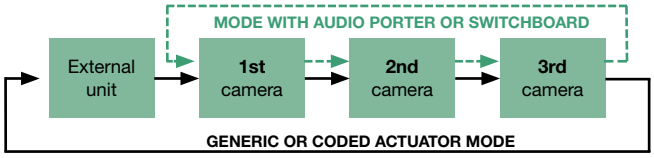

Default configuration

MODE	DIP 1	DIP 2	DIP 3	DIP 4	DIP 5	DIP 6	DIP 7	DIP 8
Video porter Generic actuator 3 cameras	ON	ON	OFF	OFF	OFF	OFF	ON	ON

Programming the number of cameras connected

► Set the number of cameras connected using dip switches 7 and 8, as shown in the table below:

	DIP 7	DIP 8	
	**0**	**0**	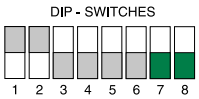
	**1**	**0**	
	**0**	**1**	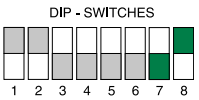
	**1**	**1**	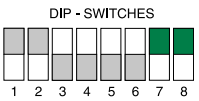

1. Generic actuator mode

Before programming the module, see “5. Art. 1409 compatibility table”.

In this mode and with the door entry phone monitor switched on, it is possible to cycle through all the connected cameras by repeatedly pressing the button programmed as “**generic actuator**”.

► Microswitch “**S1**” must be set as illustrated below.

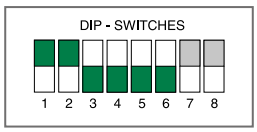

2. Coded actuator mode

Before programming the module, see "5. Art. 1409 compatibility table".

In this mode and with the door entry phone monitor switched on, by repeatedly pressing the button programmed as "**coded actuator**", it is possible to cycle through ONLY the cameras connected to Art. 1409 with the corresponding address.

▶ To activate the function, program the button on the monitor as coded actuator (with address between 220 and 227 inclusive) and set selector "**S1**" as illustrated in the table below:

S1						1409 address-coded actuator correspondence	
DIP 1	DIP 2	DIP 3	DIP 4	DIP 5	DIP 6	Address 1409	Actuator code on monitor
1	0	0	0	0	0	0	220
1	0	1	0	0	0	1	221
1	0	0	1	0	0	2	222
1	0	1	1	0	0	3	223
1	0	0	0	1	0	4	224
1	0	1	0	1	0	5	225
1	0	0	1	1	0	6	226
1	0	1	1	1	0	7	227

Up to 8 modules Art. 1409 with 8 different codes can be installed in the same system.

Example for setting address on Art. 1409 for control by means of actuator code 224

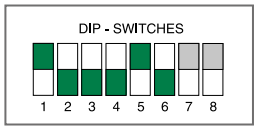

3. Mode with external audio unit

Generic/coded actuator modes can also be used on a system which includes an audio-only external unit **Art. 1622 - 1621**. For operation with "audio only" external unit:

1. set DIP 1 of selector "**S1**" as illustrated below:

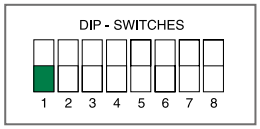

2. set the external unit to video mode as shown in the picture below:

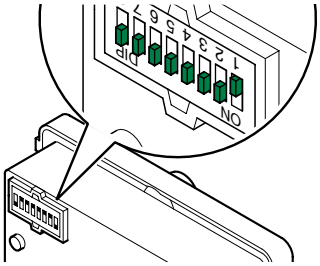

In this mode, every time a call is received from the external unit or when self-ignition takes place, the monitor switches on and displays the image from the first camera connected to Art. 1409. It will be possible to cycle through all cameras connected by repeatedly pressing the programmed button.

4. Mode with switchboard 1998A

Generic/coded actuator modes can also be used on a system which includes Video calls from switchboard.
In this mode, every time a video call is made from the switchboard, the monitor switches on as soon as the handset is lifted (or the audio button is pressed), and the image displayed will be the one from the first camera connected to Art. 1409.
At this point, each time a control button is pressed (see **generic**/**coded actuator modes**) or each time the manual contact is closed (available by connecting the INA-GND contact to the OUT-OUT terminals of the switchboard), you will be able to cycle through all available cameras.

► To use this function, the remote camera module must be connected to the outgoing Bus line from terminals **LM-LM** of the switchboard, and the switchboard set to "**Video mode**" before the call.

5. Compatibility table for art. 1409 With 1256 or other 1409 units

	Generic actuator mode	Coded actuator mode
Compatibility with 1256	No. 1256 units in generic actuator mode	No. 1256 units in coded actuator mode with codes between 220 and 227
Compatibility with Art. 1409	No other 1409 in generic actuator mode	1409 only in mode 2 with 8 separate codes

System performance and layouts

For further information of system performance and to view installation layouts, click on the system type that best meets your requirements:

- **Audio/video kit** for the creation of audio-video systems for *individual residences*.
- **Building Kit audio/video system** for the creation of audio-video systems for *small apartment blocks.*
- **SBTOP audio/video system** for the creation of audio-video systems for *residential complexes.*
- **Audio kit** for the creation of audio systems for *individual residences*.

Table of contents

Warning

Description 691

Technical features 691

Connection 692

Operation and Programming 693

- Default configuration 693
- Programming the number of cameras connected 693
- 1. Generic actuator mode 693
- 2. Coded actuator mode 694
- 3. Mode with external audio unit 694
- 4. Mode with switchboard 1998A -1998VC 695
- 5. Compatibility table for Art. 1259C with 1256 or other 1259C units 695

System performance and layouts 695

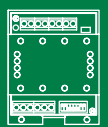

Module for SBTOP remote camera module Art. 1259C

Description

Module that allows the cyclical management of the video signals from up to 3 cameras on a door entry monitor via a dedicated key. Power supply: 12 V AC or 20 V DC. Can be used in SBTOP systems.

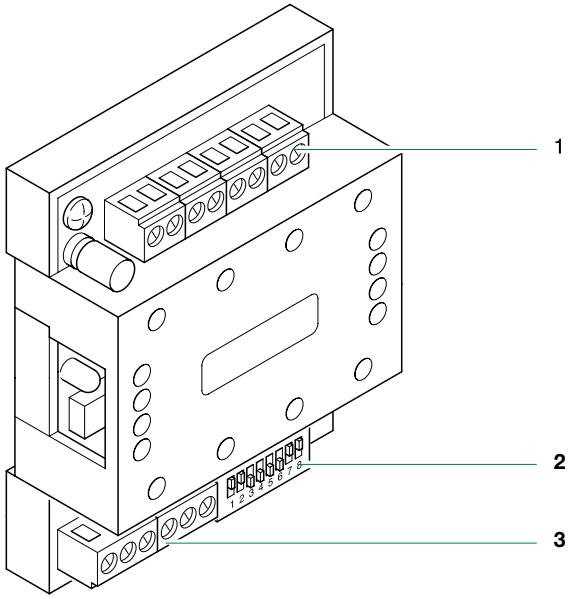

1. Terminal block **MR2** for system connection:
   V1 S1 Coax input camera 1
   V2 S2 Coax input camera 2
   V3 S3 Coax input camera 3
   IN A Camera module external control contact
   GND Common contact
2. Programming microswitches **S1**
3. Terminal block **MR1** for system connection:
   L OUT L OUT BUS line output
   L IN L IN BUS line input
   ~- ~+ 12 Vac 20 Vdc power supply input

Technical features

MAIN FEATURES	
Product height (mm)	85
Product width (mm)	60
Product depth (mm)	35
Operating temperature (°C)	-25 ÷ 40
DIN rail mounted	Yes
DIN modules (no.)	4
Maximum current absorption (mA)	150

COMPATIBILITY	
Simplebus Top audio/video system	Yes

AUDIO/VIDEO FEATURES	
Audio/video system	Yes

Connection

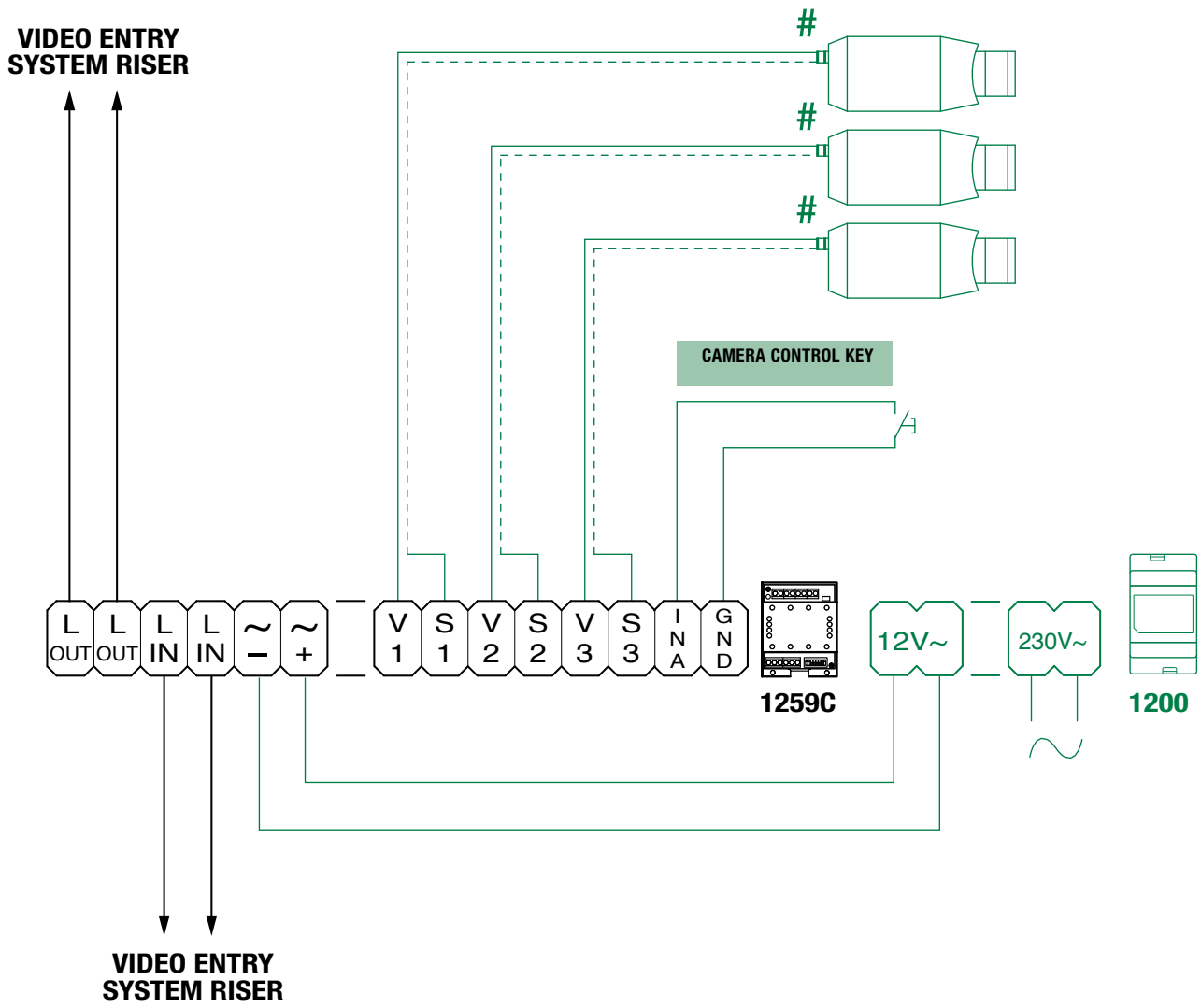

Requires separate power supply.

Operation and Programming

Art. 1259C can be used to manage analogue CCTV cameras (up to 3).

Art. 1259C can be used in systems with Art. 4888C in the SB1 section (running from the mixer power supply unit towards the external units).

✓ With monitor on

► Press the programmed key to cycle through all connected cameras, in accordance with the diagram below. Sequential switching can also be activated using a clean contact (C-NO) connected to the INA – GND input.

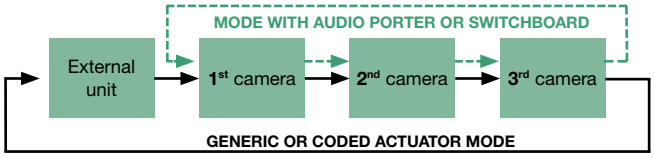

Default configuration

MODES	DIP 1	DIP 2	DIP 3	DIP 4	DIP 5	DIP 6	DIP 7	DIP 8
Actuator coded to address 5 (actuator code on monitor 225) with 3 cameras connected	ON	OFF	ON	OFF	ON	OFF	ON	ON

Programming the number of cameras connected

► Set the number of cameras connected using dip switches 7 and 8, as shown in the table below:

	DIP 7	DIP 8	
	0	0	
	1	0	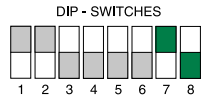
	0	1	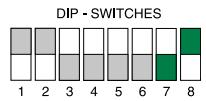
	1	1	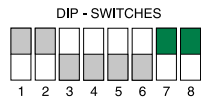

1. Generic actuator mode

Before programming the module, see *"5. Compatibility table for Art. 1259C"*.

In this mode and with the door entry phone monitor switched on, it is possible to cycle through all the connected cameras by repeatedly pressing the button programmed as **"generic actuator".**

► Microswitch **"S1"** must be set as illustrated below.

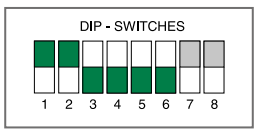

2. Coded actuator mode

Before programming the module, see "5. Compatibility table for Art. 1259C".

In this mode and with the door entry phone monitor switched on, by repeatedly pressing the button programmed as "**coded actuator**", it is possible to cycle through ONLY the cameras connected to Art. **1259C** with the corresponding address.

- To activate the function, program the button on the monitor as coded actuator (with address between 220 and 227 inclusive) and set selector "**S1**" as illustrated in the table below:

S1						1259C address-coded actuator correspondence	
DIP 1	DIP 2	DIP 3	DIP 4	DIP 5	DIP 6	Address 1259C	Actuator code on monitor
1	0	0	0	0	0	0	220
1	0	1	0	0	0	1	221
1	0	0	1	0	0	2	222
1	0	1	1	0	0	3	223
1	0	0	0	1	0	4	224
1	0	1	0	1	0	5	225
1	0	0	1	1	0	6	226
1	0	1	1	1	0	7	227

Up to 8 modules Art. 1259C with 8 different codes can be installed in the same system.

Example for setting address on Art. 1259C for control by means of actuator code 224

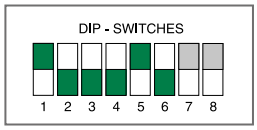

3. Mode with external audio unit

Generic/coded actuator modes can also be used on a system which includes an audio-only external unit **Art. 1622**.
For operation with "audio only" external unit:

1. set DIP 1 of selector "**S1**" as illustrated below:

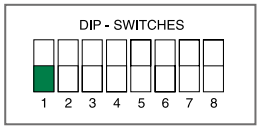

2. set the external unit to video mode as shown in the picture below:

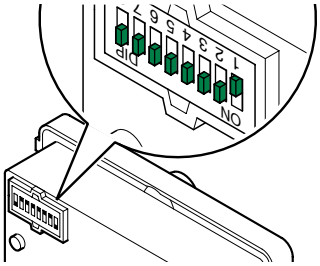

In this mode, every time a call is received from the external unit or when self-ignition takes place, the monitor switches on and displays the image from the first camera connected to Art. **1259C**. It will be possible to cycle through all cameras connected by repeatedly pressing the programmed button.

4. Mode with switchboard 1998A -1998VC

Generic/coded actuator modes can also be used on a system which includes Video calls from switchboard.
In this mode, every time a video call is made from the switchboard, the monitor switches on as soon as the handset is lifted (or the audio button is pressed), and the image displayed will be the one from the first camera connected to **Art. 1259C**.
At this point, each time a control button is pressed (see **generic**/**coded actuator modes**) or each time the manual contact is closed (available by connecting the INA-GND contact to the OUT-OUT terminals of the switchboard), you will be able to cycle through all available cameras.

- ▶ To use this function, the remote camera module must be connected to the outgoing Bus line from terminals **LM-LM** of the switchboard, and the switchboard set to "**Video mode**" before the call.

5. Compatibility table for Art. 1259C with 1256 or other 1259C units

	Generic actuator mode	Coded actuator mode
Compatibility with 1256	No. 1256 units in generic actuator mode	No. 1256 units in coded actuator mode with codes between 220 and 227
Compatibility with Art. 1259C	No other 1259C in generic actuator mode	1259C only in mode 2 with 8 separate codes

System performance and layouts

For further information of system performance and to view installation layouts, click on the type of system that best meets your needs :

- **SBTOP audio/video system** for the creation of audio-video systems for *residential complexes.*

Table of contents

Warning

Description 697

Technical specifications 697

Connections 698

4840 connections 698

System performance and layouts 698

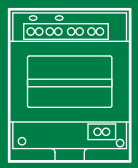

Video distributor with 4-outputs (SBC) Art. 4840

Description

Article 4840 is a video distributor with 4 outputs that can be used in “Building Kit” (exclusively 2-wire) systems

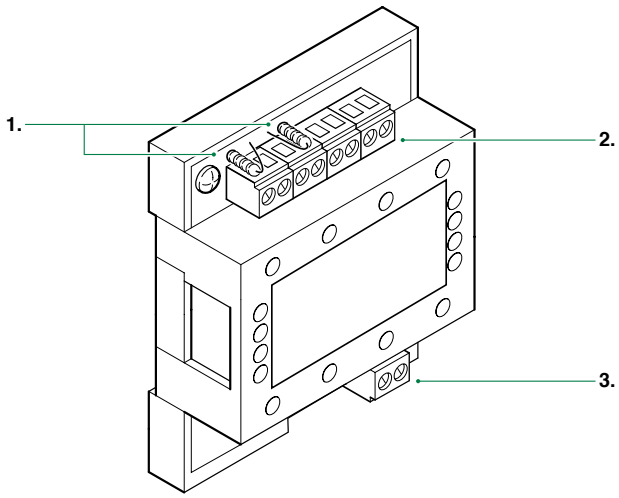

1. Resistors:
R1 R2 (Only cut off the resistance of the output used)

2. Terminal block **M2:**
L1 L1 Branch output 1 of riser
L2 L2 Branch output 2 of riser
L3 L3 Branch output 3 of riser
L4 L4 Branch output 4 of riser

3. Terminal block **M1**:
Lin Lin Riser line input

Technical specifications

GENERAL INFO	
Product height (mm)	83
Product width (mm)	66
Product depth (mm)	37
Product weight (g)	100
Operating temperature (°C)	0÷40
Working relative humidity (%)	25-75%

MOUNTING/INSTALLATION	
DIN rail mounted	Yes
DIN modules (no.)	4

AUDIO/VIDEO SPECIFICATIONS	
Audio system	No
Audio/video system	Yes

ELECTRICAL SPECIFICATIONS	
Power supply voltage (V)	22-35 Vdc

Connections

4840 connections

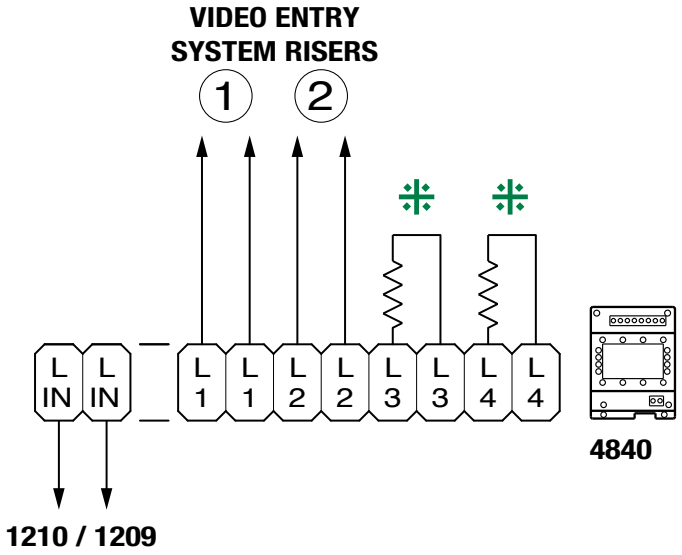

⁜ Only cut off the resistance of the output used

System performance and layouts

For further information of system performance and to view installation layouts, click on the type of system that best meets your needs:

- **Building Kit audio/video system** for the creation of audio-video systems for *small apartment blocks*.

Table of contents

Warning

Description 701

Technical specifications 701

Installation 702

Connections 702

System performance and layouts 703

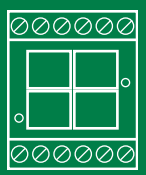

1IN-4OUT Distribution terminal art. 1412

Description

Distribution terminal for Kit video, SimpleBus Top and Building Kits; allows distribution of signal on 4 internal terminals. Compact dimensions allow installation in the round box (60 mm).

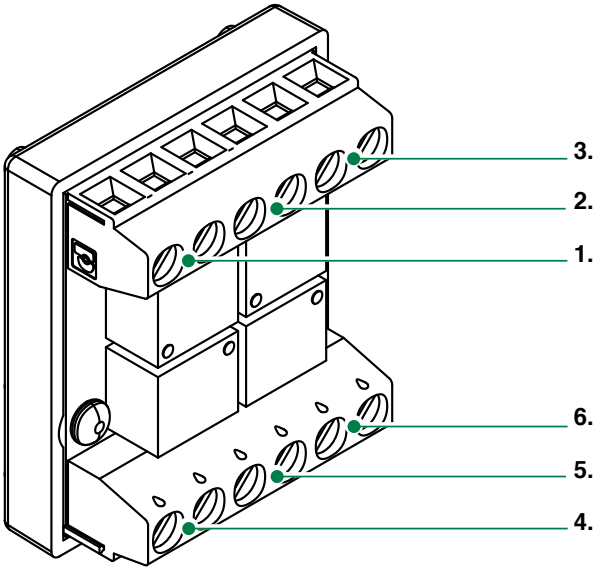

1. **LM4 LM4 terminal** Internal units 4 line
2. **Lout Lout terminal** Riser line output
3. **LM3 LM3 terminal** Internal units 3 line
4. **LM1 LM1 terminal** Internal units 1 line
5. **Lin Lin terminal** Riser line input
6. **LM2 LM2 terminal** Internal units 2 line

Technical specifications

ELECTRICAL SPECIFICATIONS	
Power supply voltage	MAX 42 Vdc (BUS line power supply)

GENERAL INFO	
Operating temperature (°C)	5 - 40
Operating humidity (%)	25 - 75
Weight (g)	50
Dimensions (mm)	34,5 x 40,5 x 20

Installation

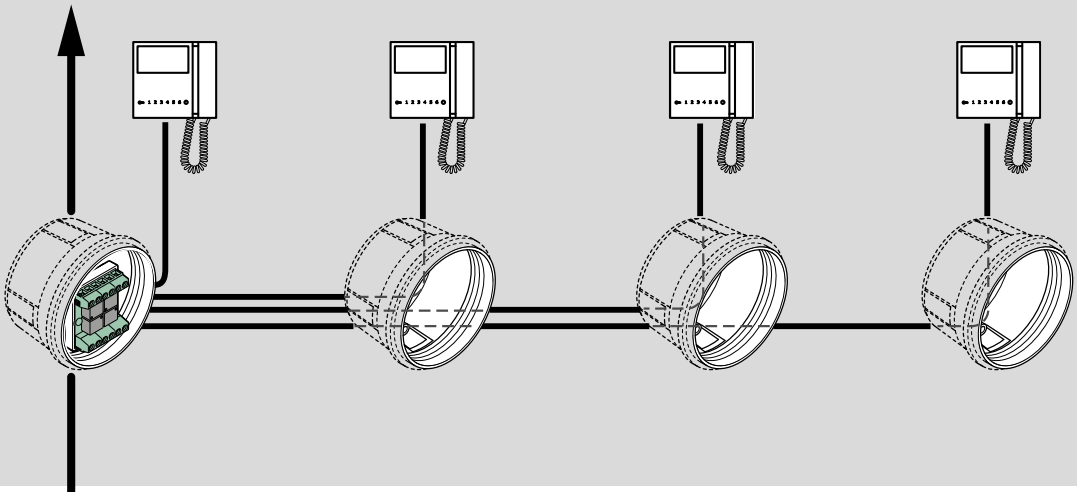

Max 4 monitors

Connections

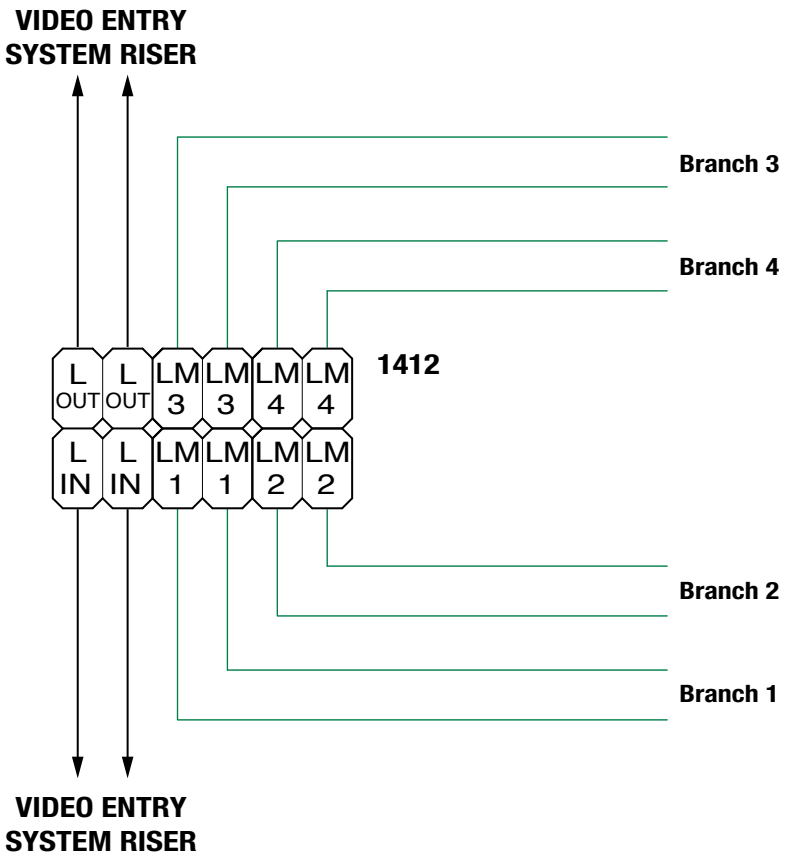

System performance and layouts

For further information of system performance and to view installation layouts, click on the system type that best meets your requirements:

- **Audio/video kit** for the creation of audio-video systems for *individual residences*.
- **Building Kit audio/video system** for the creation of audio-video systems for *small apartment blocks.*
- **SBTOP audio/video system** for the creation of audio-video systems for *residential complexes.*

Table of contents

Warning

Description **705**

Technical features **705**

Connection **706**

Operation and Programming **706**

Line protection function **706**

Jumper JP3 setting for line protection function 707

System performance and layouts **707**

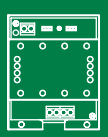

SBTOP riser branch module Art.1414

Description

*Art. **1414** is used to branch a second riser from the outgoing BUS line from the mixer. It can also act as line protection **(only for SBTOP systems)**. The device can be used with Building kit and SBTOP systems and, as it is powered by the 2-wire bus, it does not need any additional power supply.*

MAX. 100 users can be connected to each Mixer Art. 4888C, regardless of the number of Art. 1414 used.

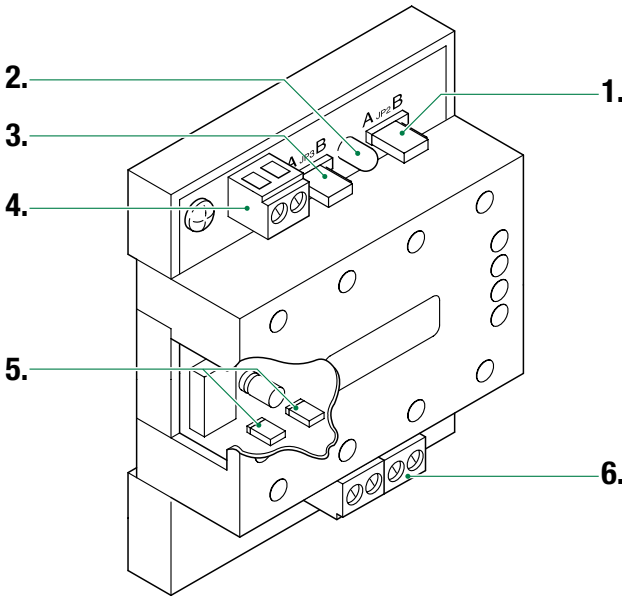

1. **JP2** jumper to reinstate the line after a short circuit.
2. **DL1** isolated line signalling LED (protection active).
3. **JP3** jumper for setting of connection distances. For line protection function only.
4. **LM LM** branch riser output terminals.
5. **JP4 JP1** jumper for activating/deactivating line protection function.
6. **L OUT L OUT** line output.
   L IN L IN line input.

Technical features

MAIN FEATURES	
Product height (mm)	85
Product width (mm)	66
Product depth (mm)	37
Operating temperature (°C)	-5÷40
RH max operating humidity (%)	25÷75
DIN rail mounted	Yes
DIN modules (no.)	4
Power supply voltage (V)	Bus line

GENERAL DATA	
Type of finish	Plastic
Product colour	White

COMPATIBILITY	
Simplebus Top audio/video system	Yes
Building Kit audio/video system	Yes

Connection

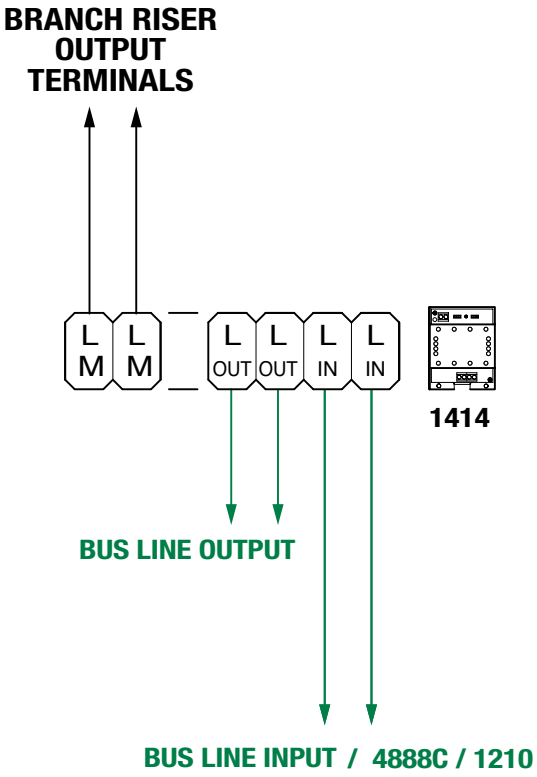

Operation and Programming

Line protection function

In Building Kit systems, it is only compatible for the “riser branch” function (not “line protection”).

▶ Jumpers JP1 and JP4 must be removed in order to activate this function.

The line protection function allows the branch line to be automatically isolated in case of short circuit. If this occurs, LED DL1 lights up to signal the fault (Fig. A). To reinstate the line, after eliminating the problem it is necessary to move jumper JP2 to position B until the LED (Fig. B) goes off, then move the jumper to position A (Fig. C).

A	B	C
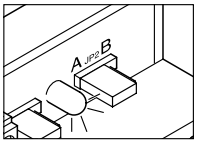	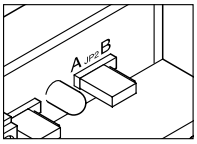	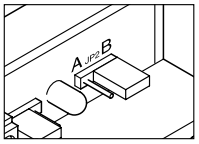

Jumper JP3 setting for line protection function

Depending on the type of cable used and the distance between the furthest riser branch internal unit and the mixer, jumper JP3 must be arranged according to the settings given in Table 1.

For all other distances refer to: SBTOP audio/video system.

Table 1	Max. distance between Mixer and furthest internal unit. D	Position of jumper JP3
Comelit Art. 4577/4579 1 mm² (Ø 1,2 mm AWG 17)	**200 m** (650 feet)	**Pos A**
1,5 mm² (Ø 1,4 mm AWG 15)	**150 m** (495 feet)	**Pos A**
1 mm² (Ø 1,2 mm AWG 17)	**120 m** (390 feet)	**Pos A**
0,28 mm² (Ø 0,6 mm AWG 23)	**70 m** (225 feet)	**Pos A**
	100 m (325 feet)	**Pos B**
UTP5 cat. 5 0,2 mm² (Ø 0,5 mm AWG 24)	**50 m** (160 feet)	**Pos A**
	80 m (260 feet)	**Pos B**
0,5 mm² (Ø 0,8 mm AWG 20)	**80 m** (260 feet)	**Pos A**
	120 m (390 feet)	**Pos B**

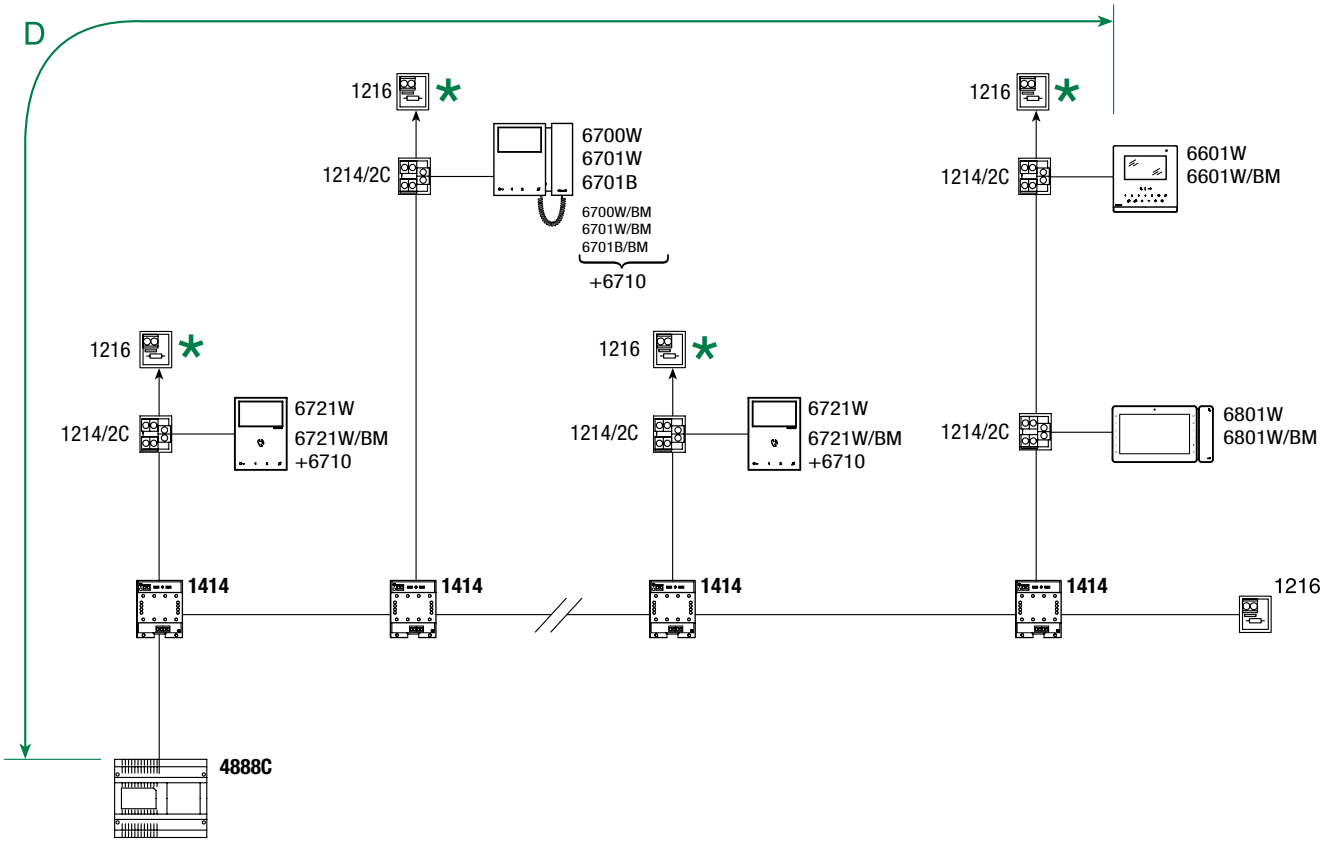

* Supplied with Art. 1414

System performance and layouts

For further information of system performance and to view installation layouts, click on the system type that best meets your requirements:

- **Building Kit audio/video system** for the creation of audio-video systems for *small apartment blocks.*
- **SBTOP audio/video system** for the creation of audio-video systems for *residential complexes.*

Table of contents

Warning

Description 709

Technical features 709

Connection 710

Operation and Programming 710

Jumper setting for connection distances 711

System performance and layouts 711

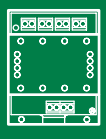

SBTOP distributor module with integrated protection line Art. 1415

Description

Art. 1415 is used to branch up to 4 internal units on the riser (with a different address for each output) and also acts as a line protection, isolating the branches in the event of power surges or short circuit. The device can be used with SBTOP wiring and, as it is powered by the 2-wire bus, it does not need any additional power supply. MAX. 100 users can be connected to each mixer Art. 4888C regardless of the number of Art. 1415 used, and MAX. 3 internal units can be connected in cascade for each output of Art. 1415.

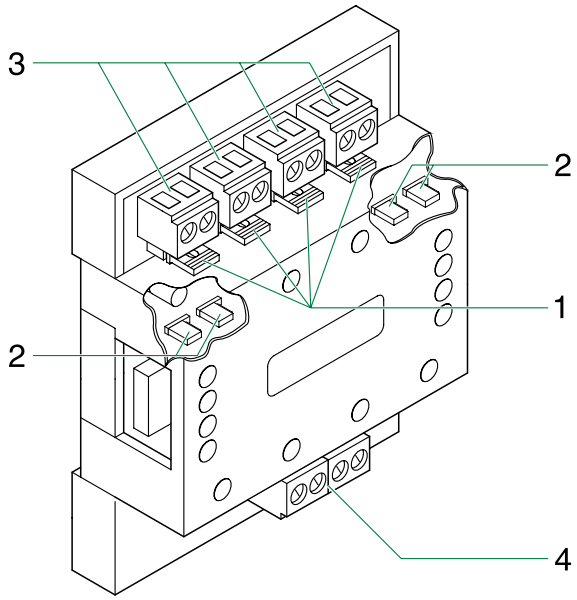

1. **JP1** (L4L4), **JP3** (L3L3), **JP5** (L2L2), **JP7** (L1L1) jumper to reinstate the branch line after a short circuit.
2. **JP2** (L4L4), **JP4** (L3L3), **JP6** (L2L2), **JP8** (L1L1) jumper for setting of connection distances.
3. **L1L1, L2L2, L3L3, L4L4** branch line output terminals.
4. **L IN L IN** BUS line input.
   L OUT L OUT BUS line output.

Technical features

MAIN FEATURES	
Product height (mm)	35
Product width (mm)	60
Product depth (mm)	85
Operating temperature (°C)	-25°÷ 50°
RH max operating humidity (%)	25 ÷ 75
DIN rail mounted	Yes
DIN modules (no.)	4
Power supply voltage (V)	Bus line

GENERAL DATA	
Type of finish	Plastic
Product colour	White

COMPATIBILITY	
Simplebus Top audio/video system	Yes

Connection

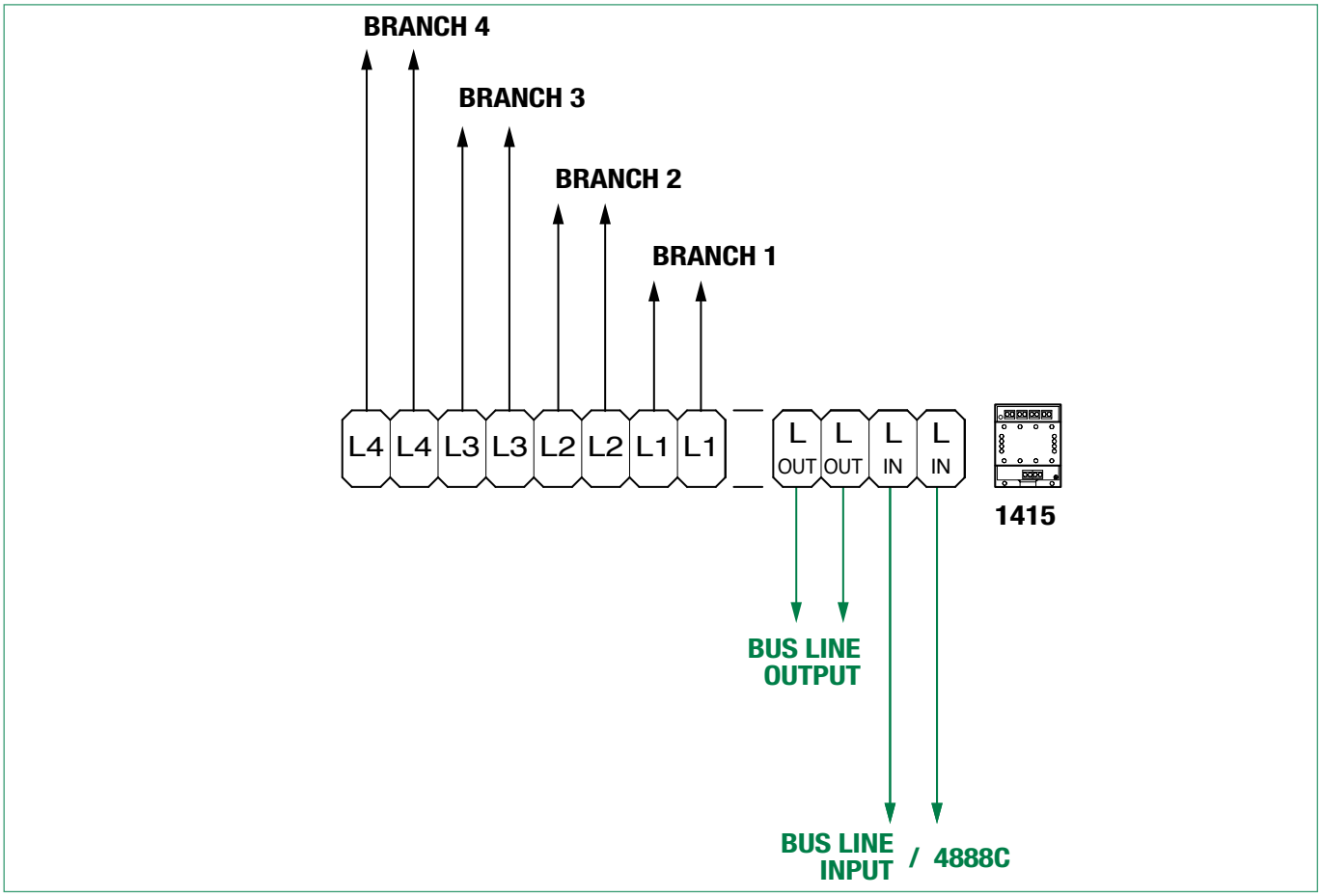

Operation and Programming

Line protection function

The line protection function allows the branch line to be automatically isolated in case of short circuit. If this occurs, the corresponding output LED lights up to signal the fault (Fig. A). To reinstate the line, after eliminating the problem it is necessary to move the output jumper to position B until the LED (Fig. B) goes off, then move the jumper to position A (Fig. C).

A	B	C
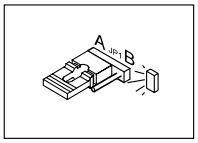	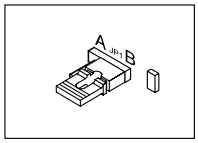	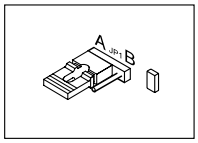

Jumper setting for connection distances

Depending on the type of cable used and the distance between the furthest internal unit of the user branch and the mixer, the jumper of the output in use must be arranged according to the settings given in Table 1.

For all other distances refer to:SBTOP audio/video system

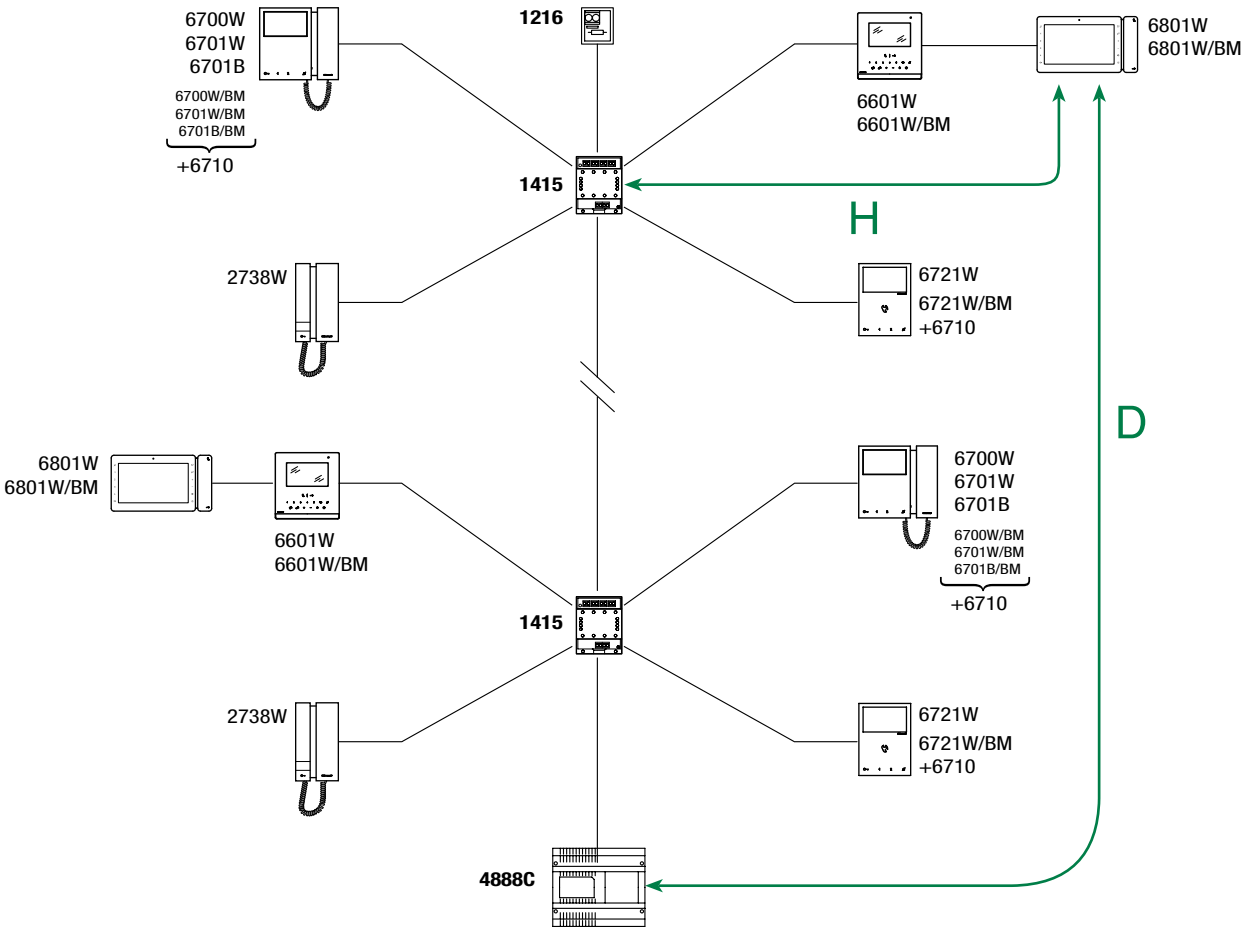

Table 1	Max. distance between Art. 1214/2C and the furthest internal unit	Max. distance between Mixer and the furthest internal unit	Position of jumper JP2, JP4, JP6, JP8
	H	D	
Comelit Art. 4577/4579 1 mm² (Ø 1,2 mm AWG 17)	**60 m** (195 feet)	**200 m** (650 feet)	Pos A
1,5 mm² (Ø 1,4 mm AWG 15)	**40 m** (130 feet)	**150 m** (495 feet)	Pos A
1 mm² (Ø 1,2 mm AWG 17)	**30 m** (95 feet)	**120 m** (390 feet)	Pos A
0,28 mm² (Ø 0,6 mm AWG 23)	**40 m** (130 feet)	**70 m** (225 feet)	Pos A
		100 m (325 feet)	Pos B
UTP5 cat. 5 0,2 mm² (Ø 0,5 mm AWG 24)	**40 m** (130 feet)	**50 m** (160 feet)	Pos A
		80 m (260 feet)	Pos B
0,5 mm² (Ø 0,8 mm AWG 20)	**40 m** (130 feet)	**80 m** (260 feet)	Pos A
		120 m (390 feet)	Pos B

System performance and layouts

For further information of system performance and to view installation layouts, click on the system type that best meets your requirements:

- **SBTOP audio/video system** for the creation of audio-video systems for *residential complexes.*

Table of contents

Warning

Description 713

Technical features 713

Connection 714

System performance and layouts 714

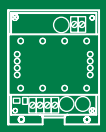

Line amplifier module Art. 4833C

Description

Amplifier for Simplebus TOP systems, to increase the distance between the external unit and mixer 4888C. Regenerates the video component of the riser signal. Equipped with microcontroller for optimal operation management. Follow the operating instructions in the technical documentation. Power supply: 12V AC or 20V DC. Only to be mounted on the system section feeding into the mixers art. 4888C (Simplebus 1 section). Dimensions: 66x85x37 mm (4 DIN modules).

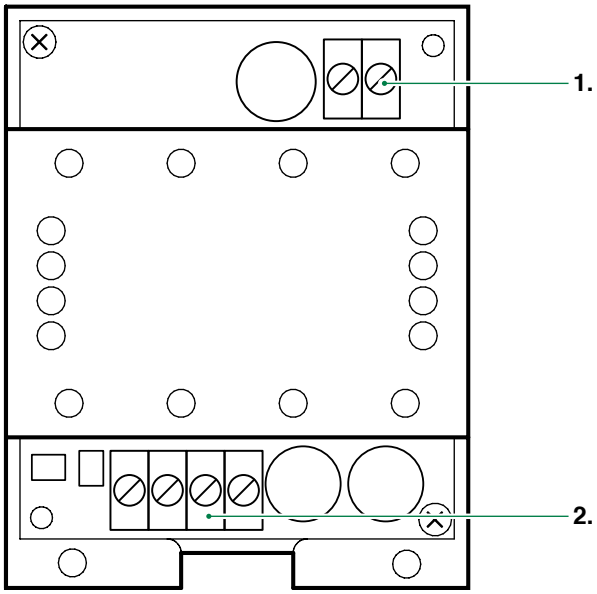

1. Terminal block **MR1**
+ - power supply terminals (12V AC or 20V DC)

2. Terminal block **MR2**
LIN LIN BUS line input
LOUT LOUT BUS line output

Technical features

MAIN FEATURES	
Product height (mm)	85
Product width (mm)	66
Product depth (mm)	37
Operating temperature (°C)	-5 ÷ 40
DIN rail mounted	Yes
DIN modules (no.)	4
Maximum current absorption (mA)	100

GENERAL DATA	
Type of finish	Plastic
Product colour	White

COMPATIBILITY	
Simplebus Top audio/video system	Yes

Connection

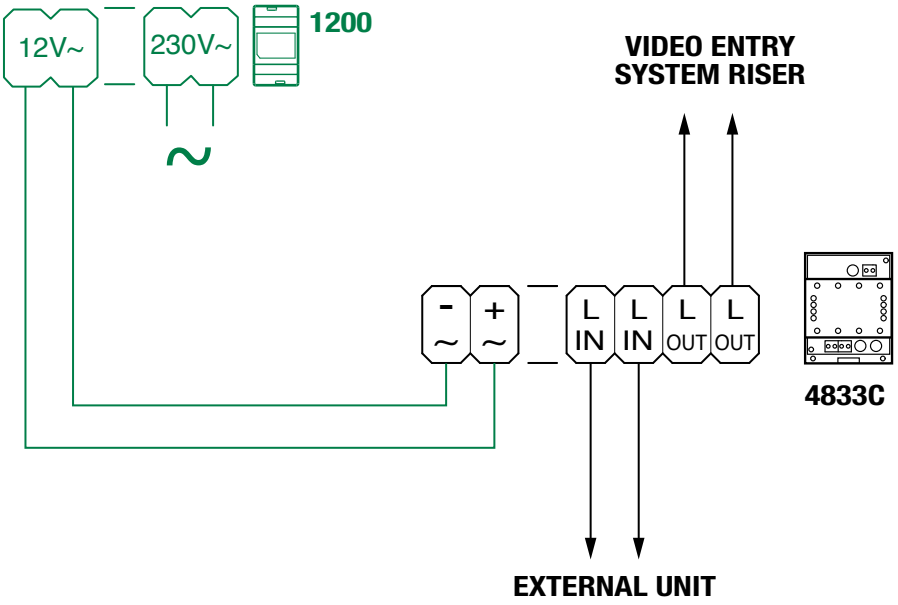

System performance and layouts

For further information of system performance and to view installation layouts, click on the system type that best meets your requirements:

- **SBTOP audio/video system** for the creation of audio-video systems for *residential complexes.*

Table of contents

Warning

Description 717

Technical features 717

Connection 718

Notes on installation 718

System performance and layouts 718

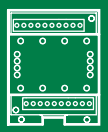

Concentrator module Art. 4834/9

Description

Line concentrator for video system. Allows distribution of the signal on 9 risers. Does not require a power supply. Only to be mounted on the system section feeding into the mixers. Dimensions: 66x85x35 mm (4 DIN modules). Can be used SBTOP audio-video systems.

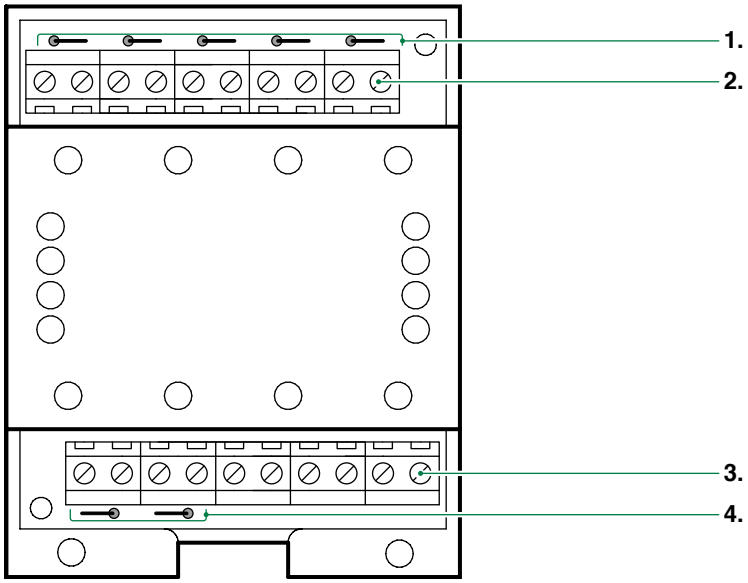

1. Resistors:
R3 R4 R5 R6 R7 (Only cut off the resistance of the output used)

2. Terminal block **MR2**
L5 L5 branch output 5 of riser
L6 L6 branch output 6 of riser
L7 L7 branch output 7 of riser
L8 L8 branch output 8 of riser
L9 L9 branch output 9 of riser

3. Terminal block **MR1**
L4 L4 branch output 4 of riser
L3 L3 branch output 3 of riser
L2 L2 branch output 2 of riser
L1 L1 branch output 1 of riser
LIN LIN connection to the line coming from the external unit

4. Resistors:
R2 R1 (Only cut off the resistance of the output used)

Technical features

MAIN FEATURES	
Product height (mm)	85
Product width (mm)	66
Product depth (mm)	37
Operating temperature (°C)	-5 ÷ 40
DIN rail mounted	Yes
DIN modules (no.)	4

COMPATIBILITY	
Simplebus Top audio/video system	Yes

Connection

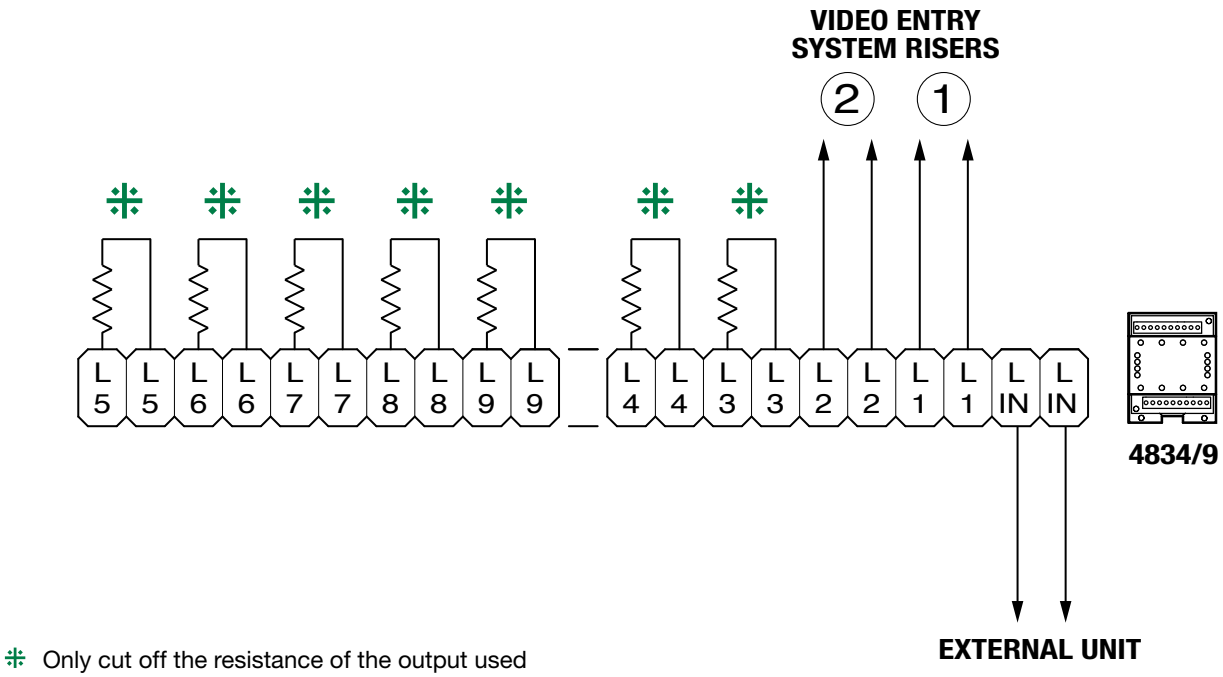

Notes on installation

In the case of a single entrance, it is possible to connect up to 9 Mixers-power supplies Art. 4888C after Art. 4834/9.

If you need more than the 9 branches provided by one 4834/9 concentrator, you can connect a second 4834/9 in series to the output of the first. Interpose an amplifier Art. 4833C for each additional Art 4834/9. Use a maximum of 3 outputs of the first 4834/9 in this configuration for a maximum total of 33 branches.

A MAX of 2 Arts.4834/9 in cascade can be inserted.

The **MAX number of users that can be connected to a single Mixer/power supply Art. 4888C is 100** regardless of whether they are on a single riser or distributed over several riser branches (e.g.: 100 users over a single riser or 25 users over each of the 4 riser branches)

System performance and layouts

For further information of system performance and to view installation layouts, click on the system type that best meets your requirements:

- SBTOP audio/video system for the creation of audio-video systems for *residential complexes.*

Table of contents

Warning

Installation Art.1250M 721

Installation Art. 1250XV, Art. 1250XA 723



Accessories Art. 1250M and Art. 1250XV, Art. 1250XA

Installation Art.1250M

- Apply article 1250M to metal surfaces that is not painted, not oxidised, clean, dry and homogeneous.
- Carefully clean the surface to which art. 1250M is to be fixed using Isopropanol and allow to dry.
- Apply the double-sided adhesive tape at a temperature between +25°and 40°. Application at temperatures below 18° is not advisable: in the event of low-temperature application, heat the surface up to 35°. If applied correctly, low application temperatures will not affect adhesion.

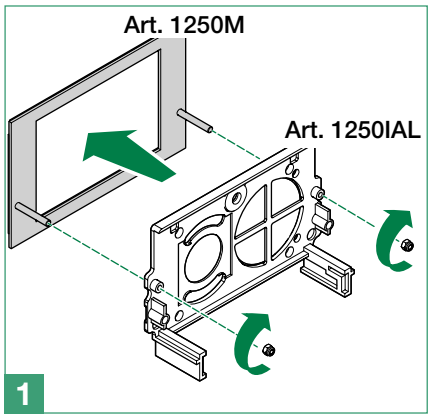

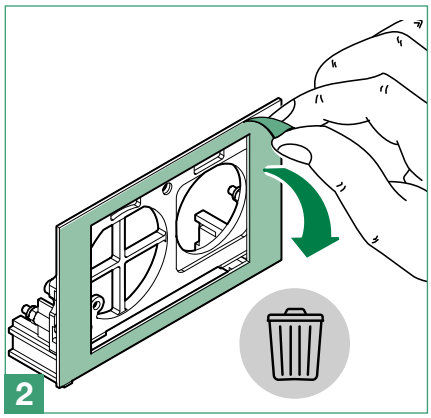

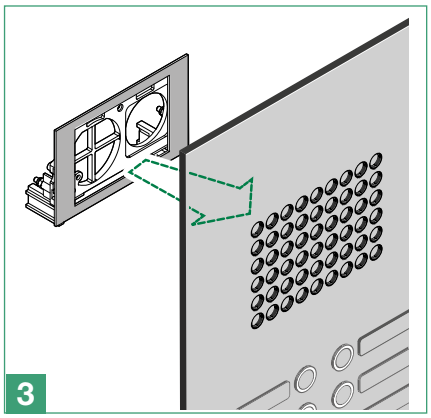

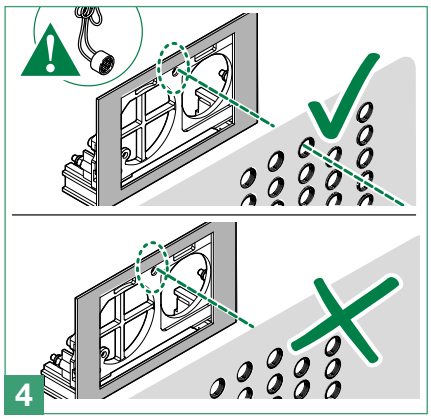

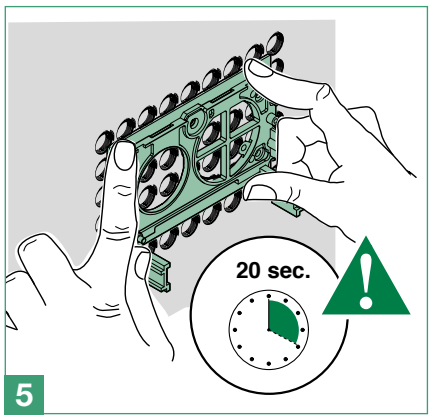



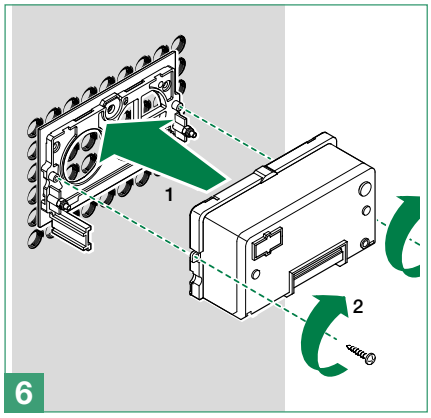

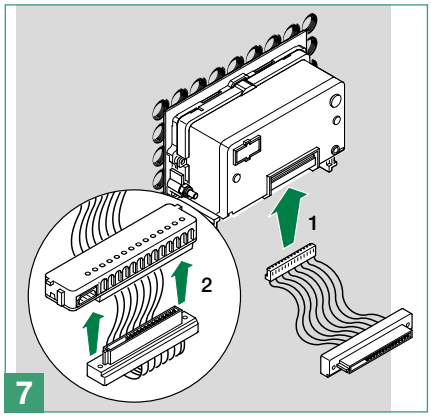

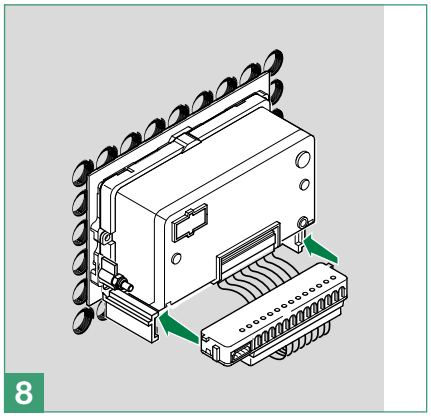

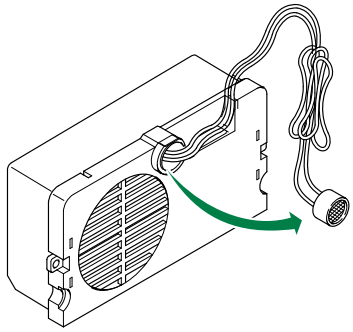

A Optional

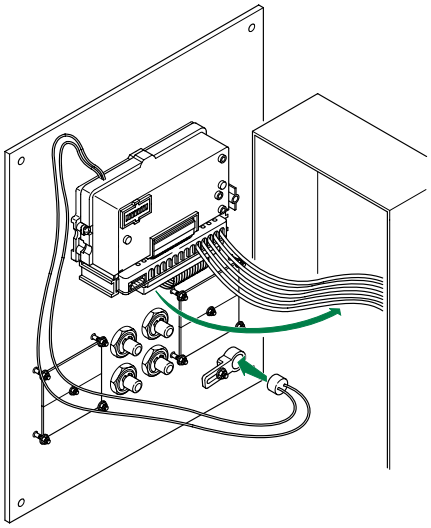

B

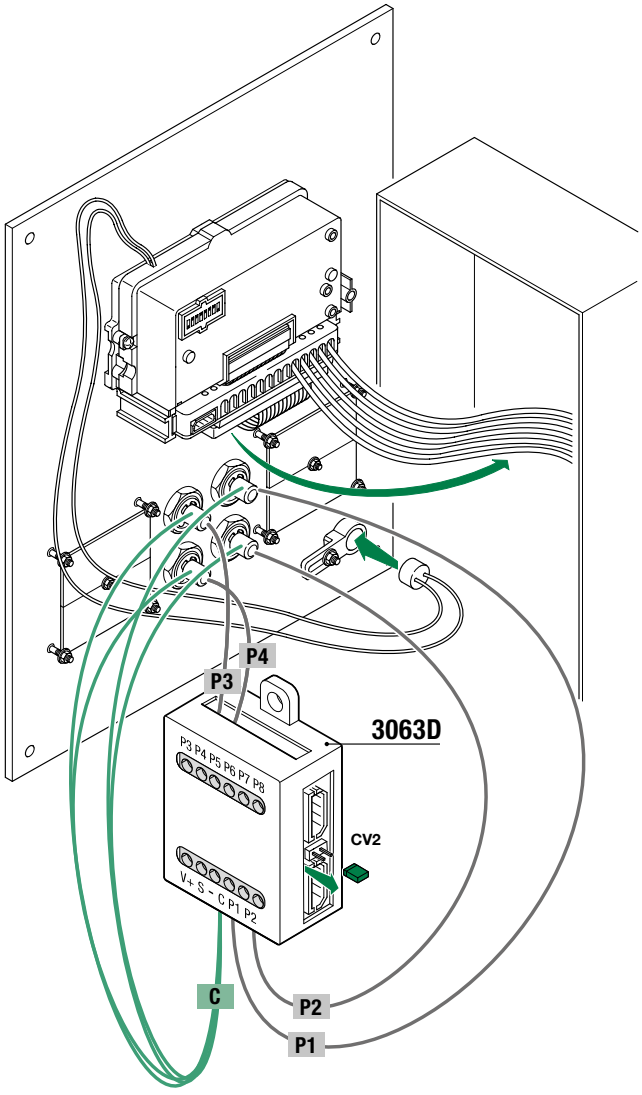

C

Installation Art. 1250XV, Art. 1250XA

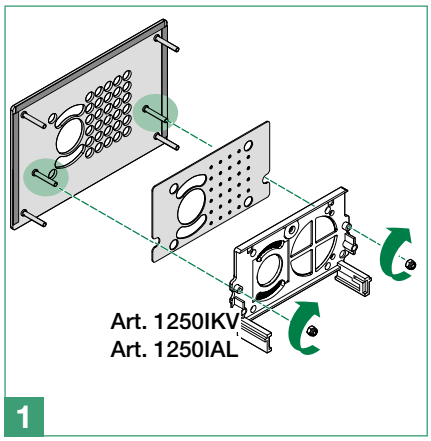

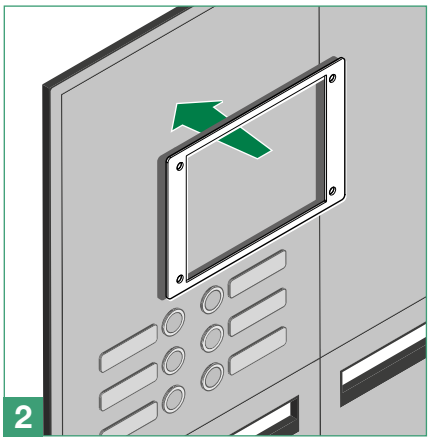

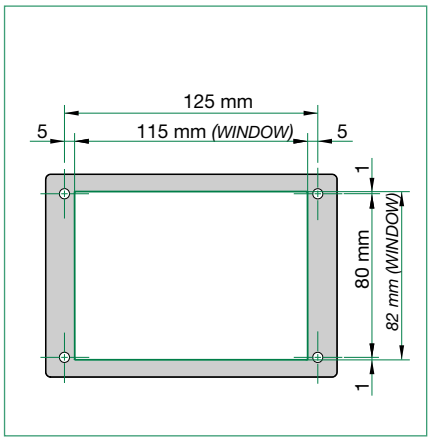

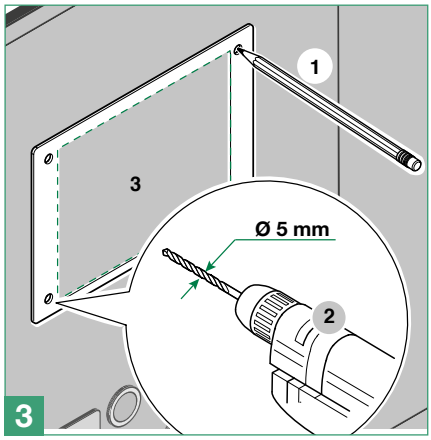

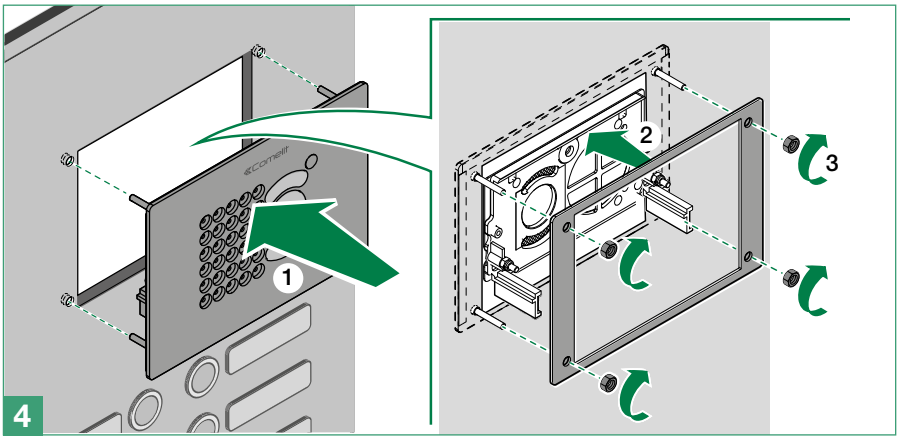

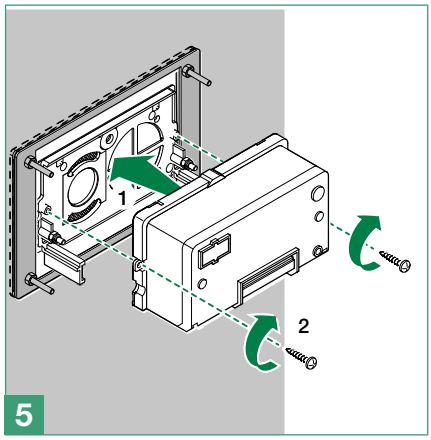

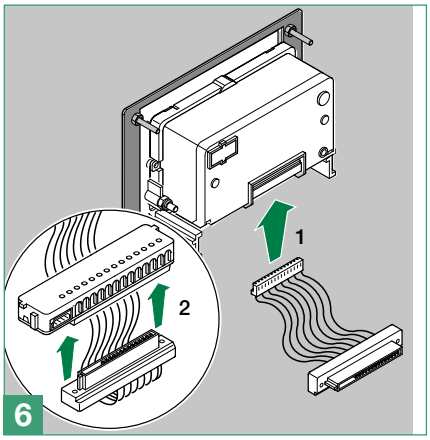

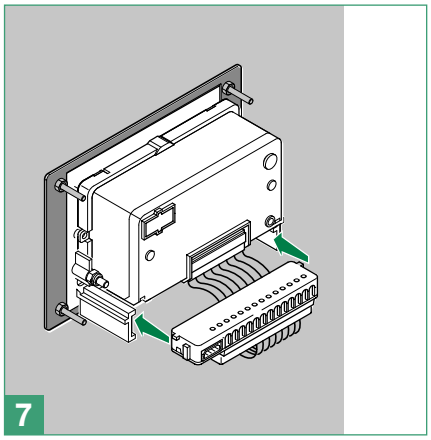

Table of contents

Warning

Description **701**

Software 1235A Rev. 1.1.1 ..... **701**

Software installation **701**

Software update **701**

Using the software **701**

Alternatively, you can use a Dymo-type labelling device 701

Fitting Art. 3061M, 3061S, 3061A nameplates **702**

Fitting Extra entrance panels nameplates **702**

Fitting Ikall external unit nameplates **703**

Fitting Vandalcom external unit nameplates **704**

Fitting 316 Analog external unit nameplates **705**

Fitting Quadra (Art. 4893) external unit nameplates **706**

Fitting Quadra (Art. 4893M) external unit nameplates **707**

Software for printing nameplate labels Art. 1235A
and adhesive label sheets
Art. 1217-1217A-1218-1219-1220-3059-ET9300

Description

*Art. **1235A** is a dedicated software for the creation and printing of nameplate and information labels for Ikall, Vandalcom, Quadra, 316 Analog and Extra entrance panels. Requires use of adhesive labels Art.**1217, 1217A, 1218, 1219**, **1220**, **3059** or **ET9300**.*

Each kit, containing 20 pre-cut adhesive polyester sheets, refers to a specific entrance panel:

Art. 1217: label sheets for **Quadra (Art. 4893)** entrance panels
Art. 1217A: label sheets for **Quadra (Art. 4893M)** entrance panels
Art. 1218: label sheets for **Ikall** entrance panels
Art. 1219: label sheets for **Vandalcom** entrance panels
Art. 1220: label sheets for **316 Analog** entrance panels
Art. 3059: label sheets for **Art. 3061M, 3061S, 3061A**
Art. ET9300: label sheets for **Extra** entrance panels

The labels can be customised by printing names using the software 1235A, available for download from the website ***pro.comelitgroup.com.***

For iKall external unit (old model) with label holder measuring 71x23.5 mm and 71x83.5 mm only, use sw 1235 Rev. 2.1.

Software 1235A Rev. 1.1.1

Windows XP , Vista, Windows 7, Windows 8 or Windows 10 Operating Systems must be providedby: Microsoft .NET Framework 4.0 e Crystal Report (if there is an active Internet connection they will be downloaded automatically).

Software installation

▶ Open the file Setup.exe

Software update

▶ Uninstall the previous version and open the file **Setup.exe**.

or: To install a new sw version, without replacing the previous version: Open the file **“Setup[...].msi”**

Using the software

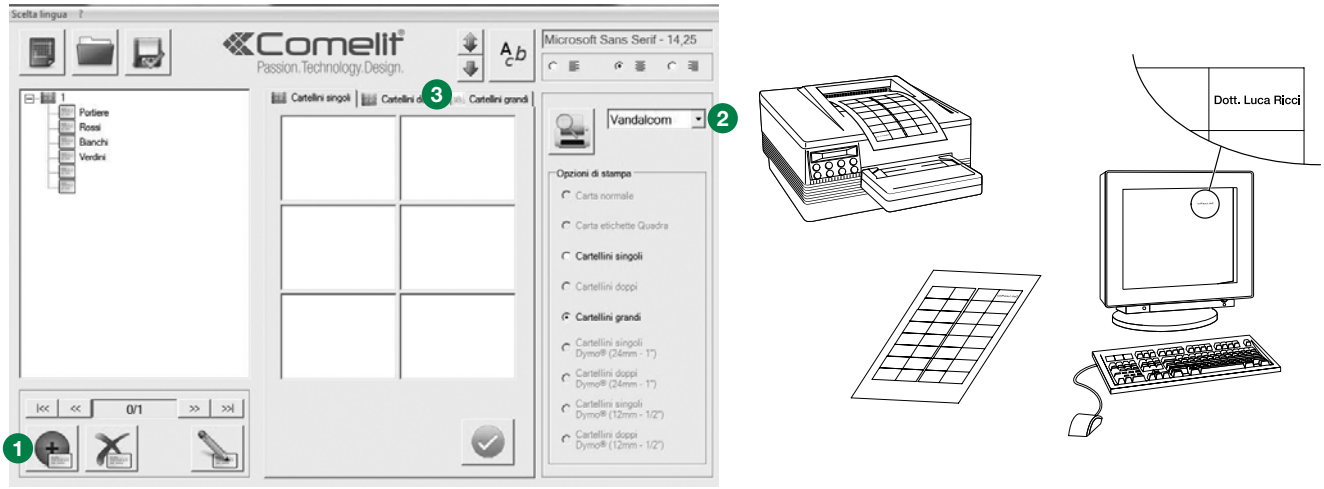

1. Add new nameplate
2. Choose entrance panel
3. Choose layout

Alternatively, you can use a Dymo-type labelling device

▶ Use a transparent adhesive labeling strip (e.g. Dymo).

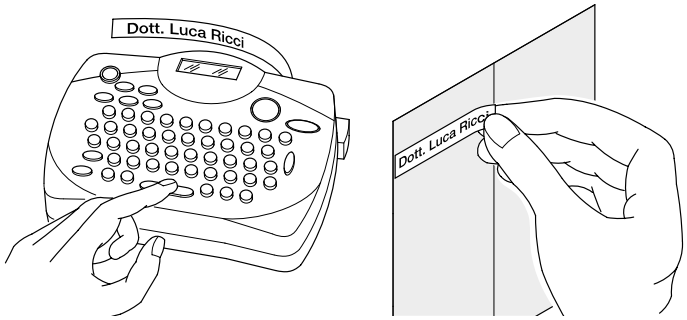

Fitting Art. 3061M, 3061S, 3061A nameplates

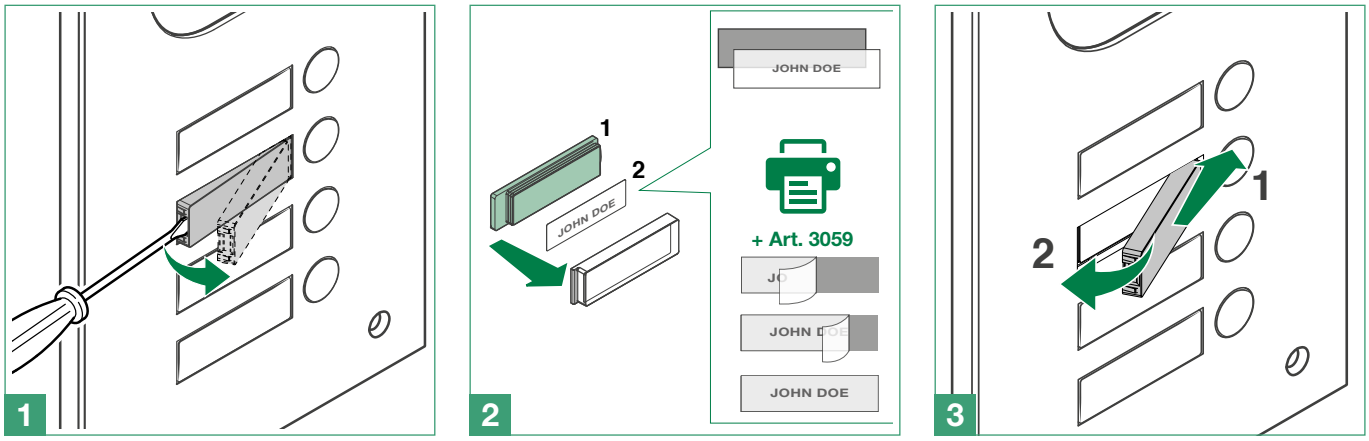

Fitting Extra entrance panels nameplates

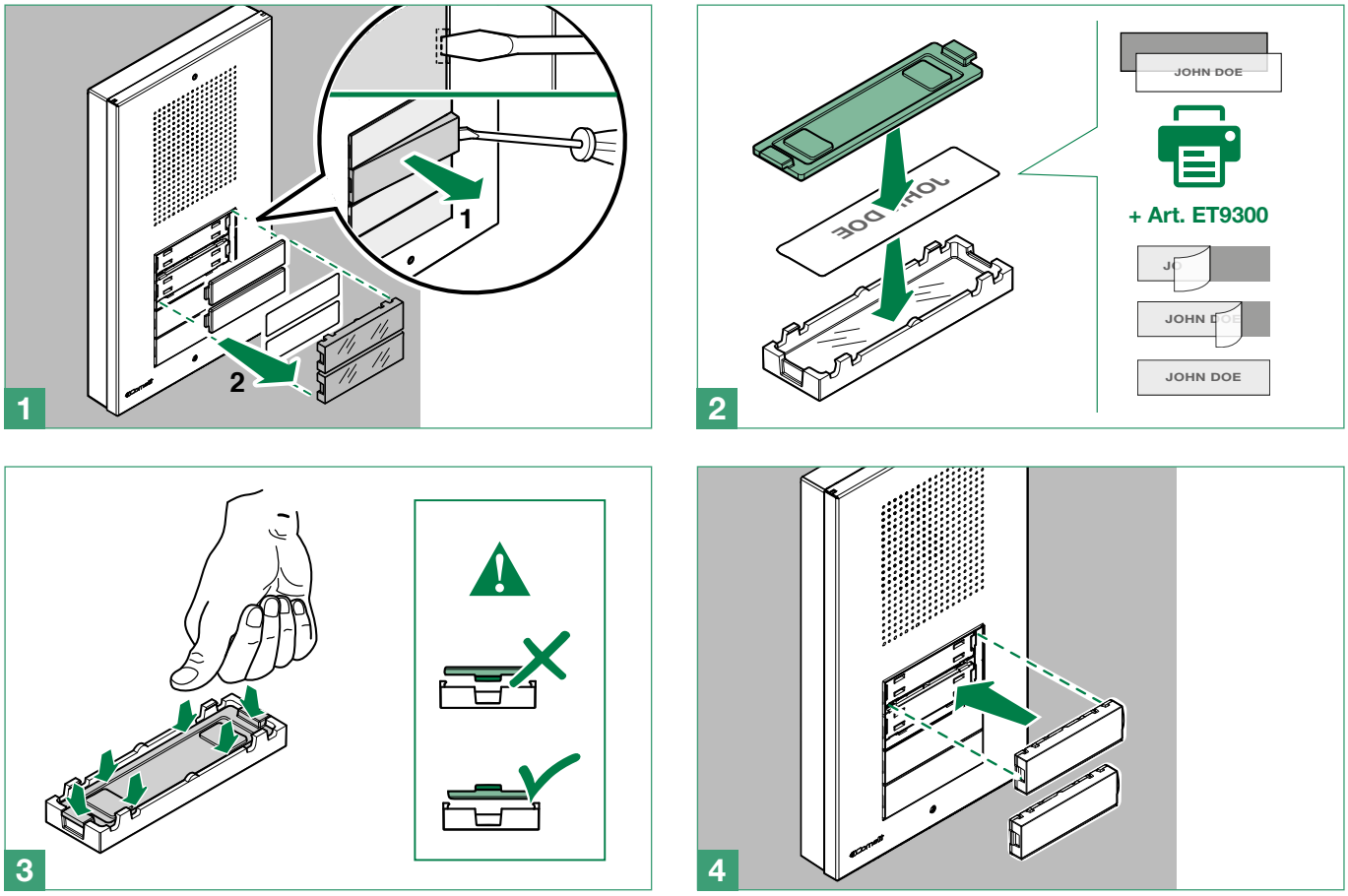

Fitting Ikall external unit nameplates

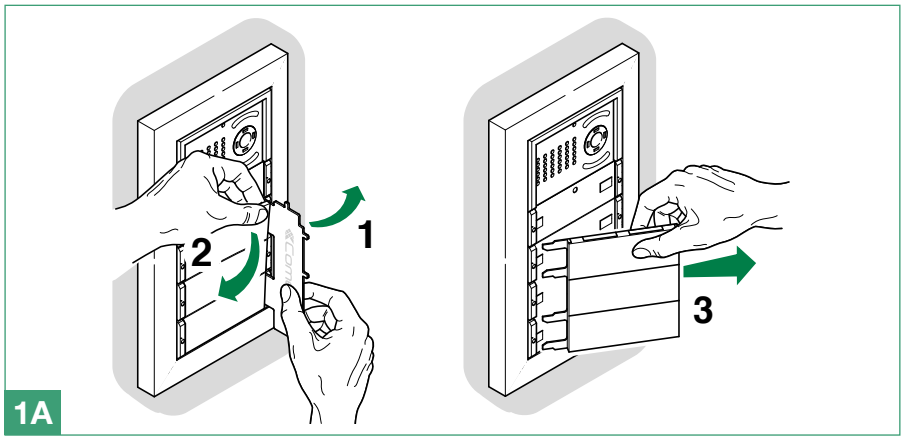

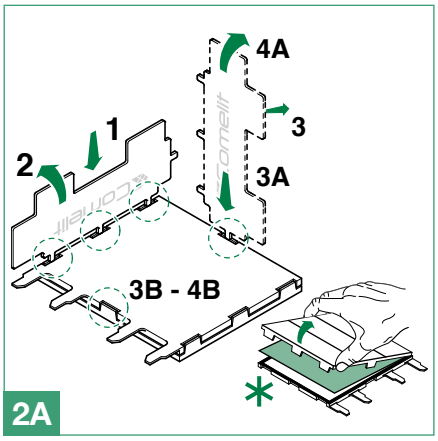

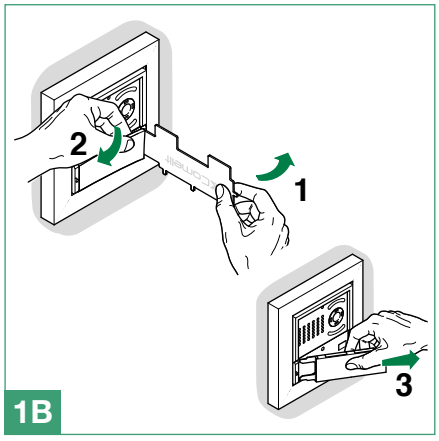

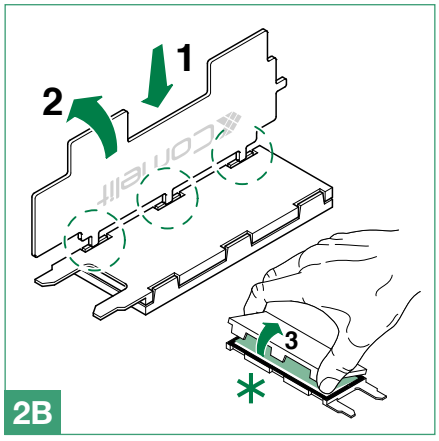

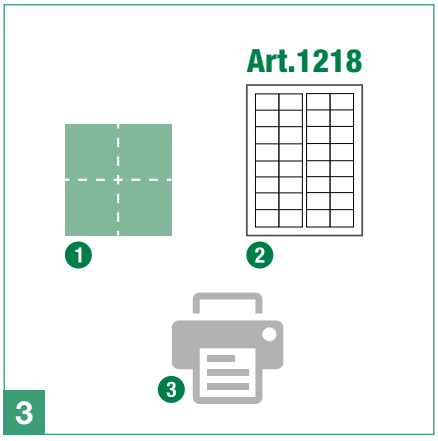

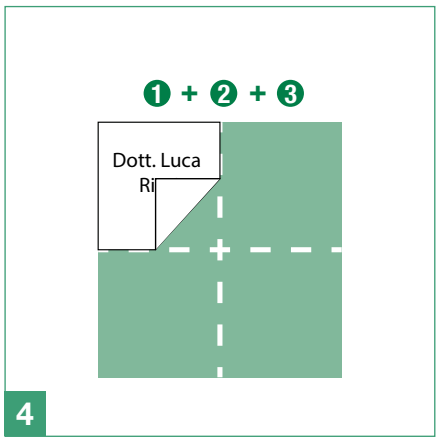

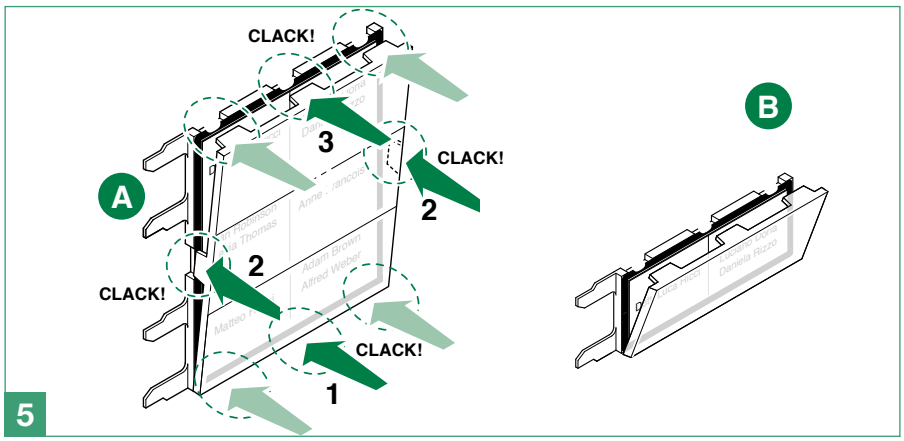

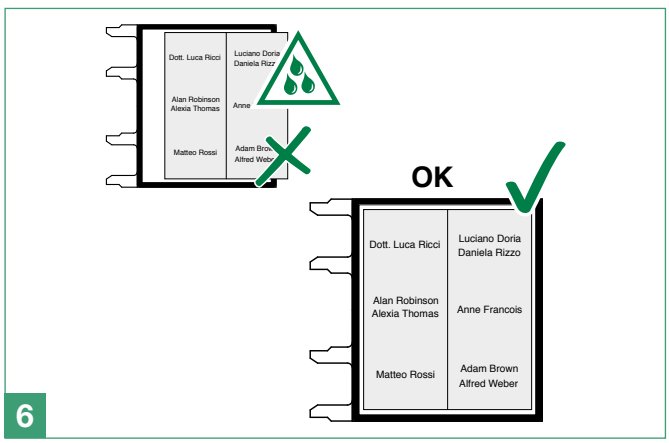

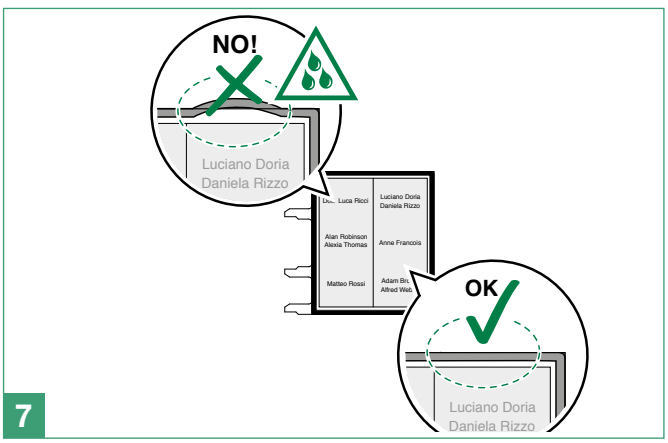

Centre the label to prevent infiltration.

Fitting Vandalcom external unit nameplates

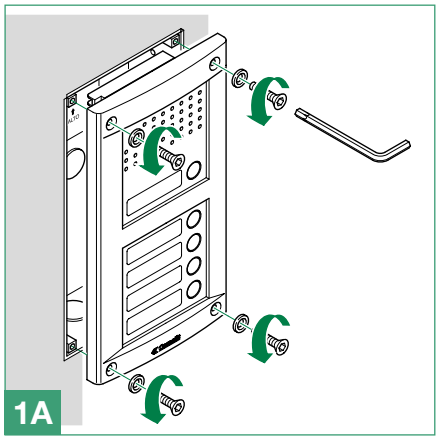

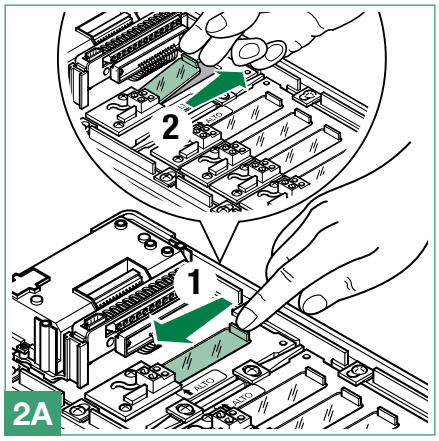

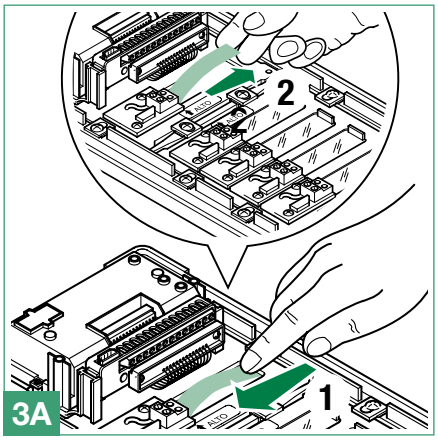

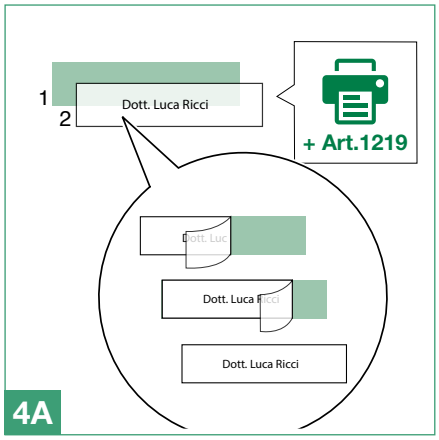

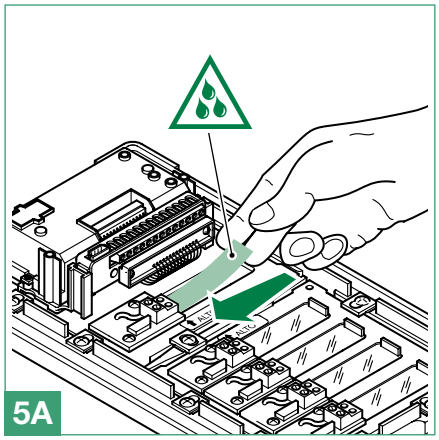

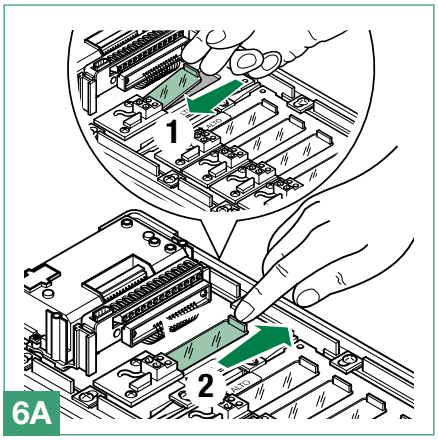

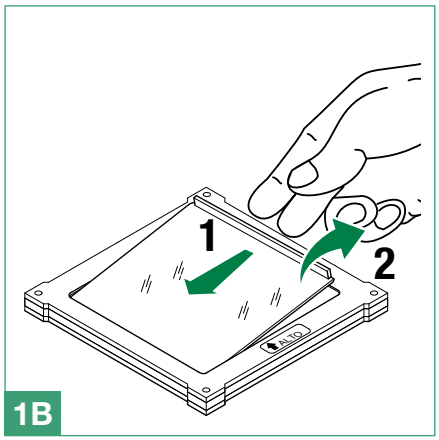

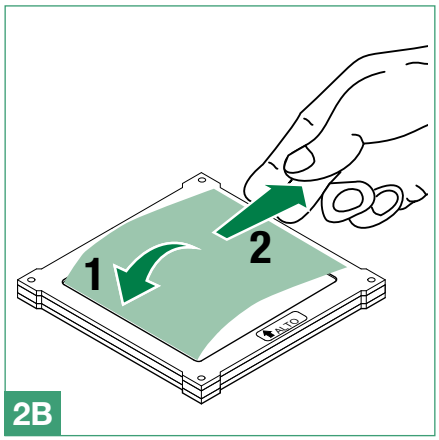

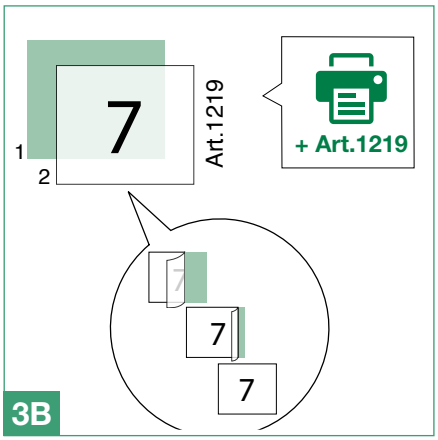

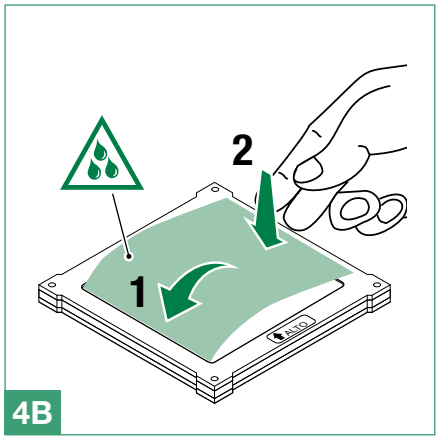

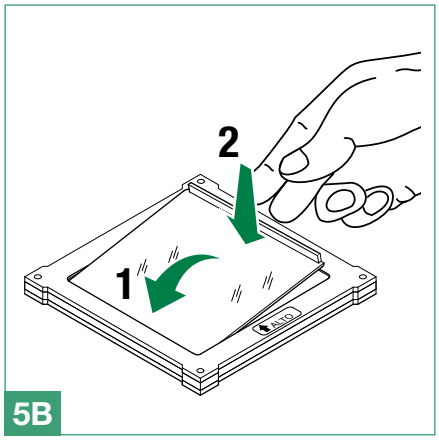

Centre the label to prevent infiltration.

Fitting 316 Analog external unit nameplates

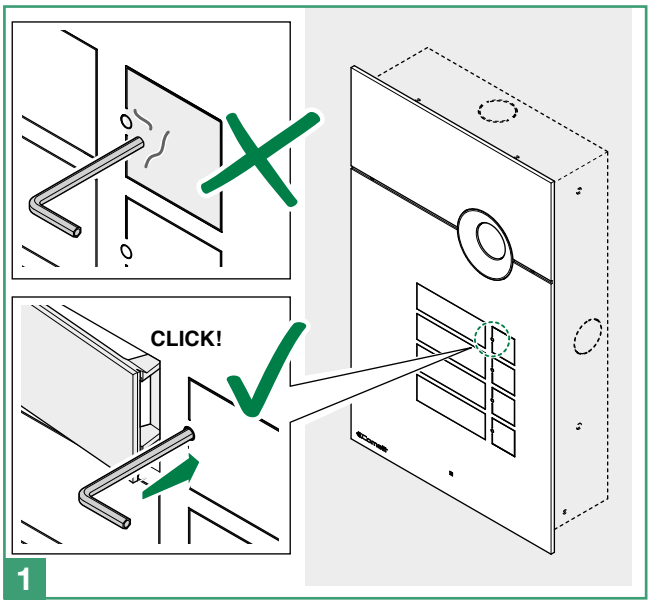

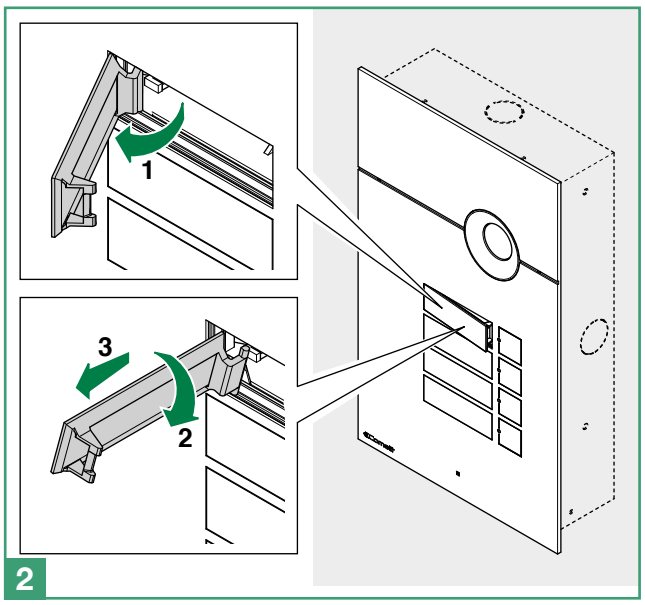

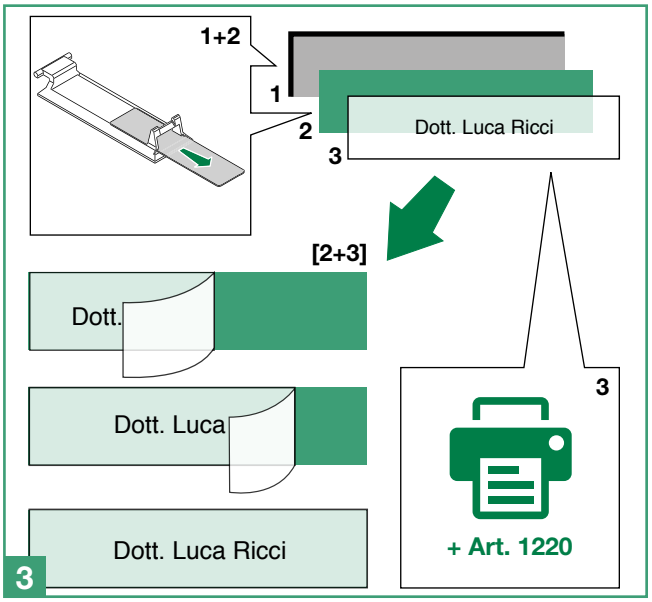

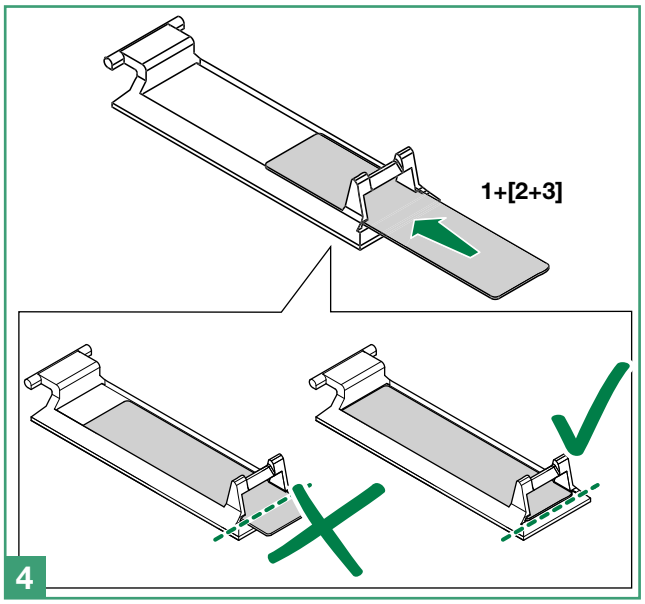

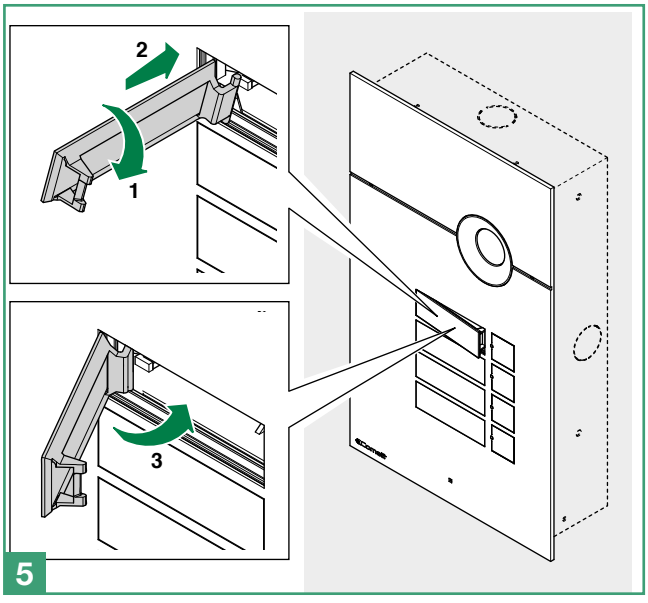

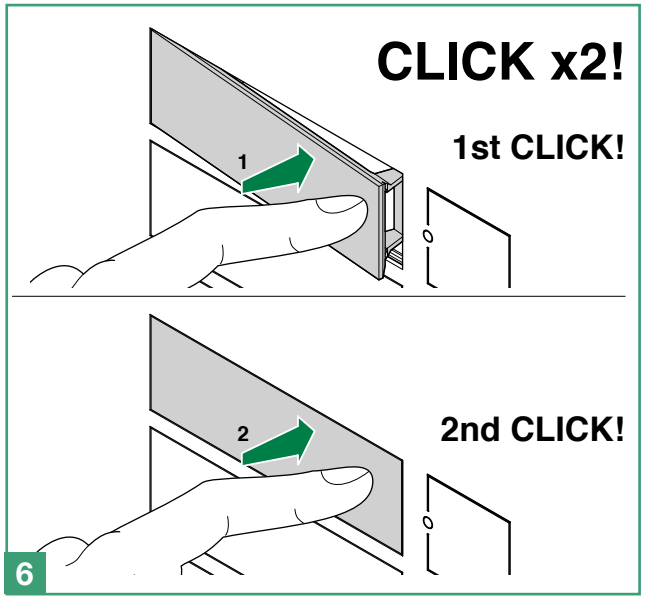

Fitting Quadra (Art. 4893) external unit nameplates

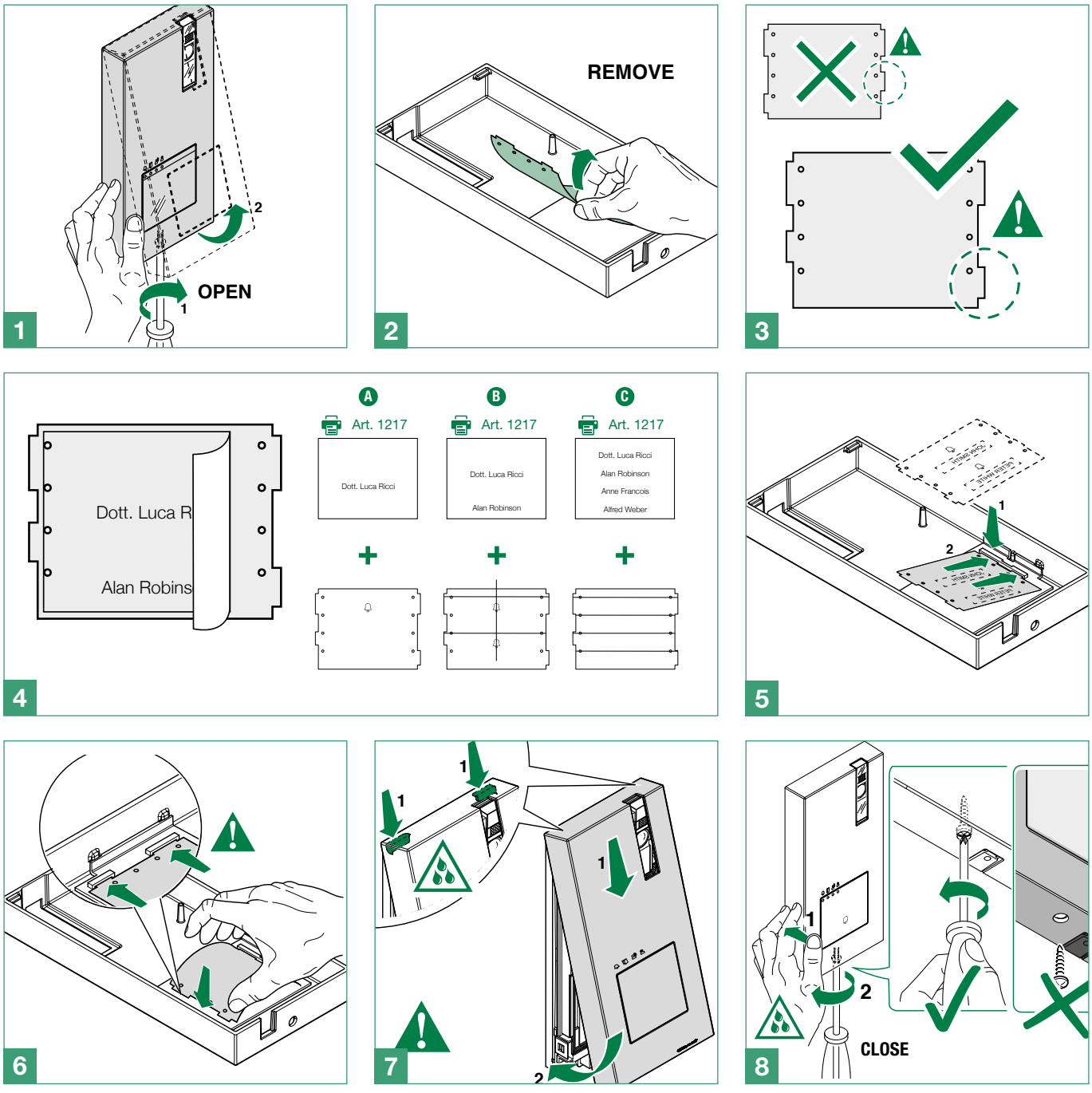

To ensure that the product remains water-tight, make sure that the fixing procedure is carried out correctly.

Fitting Quadra (Art. 4893M) external unit nameplates

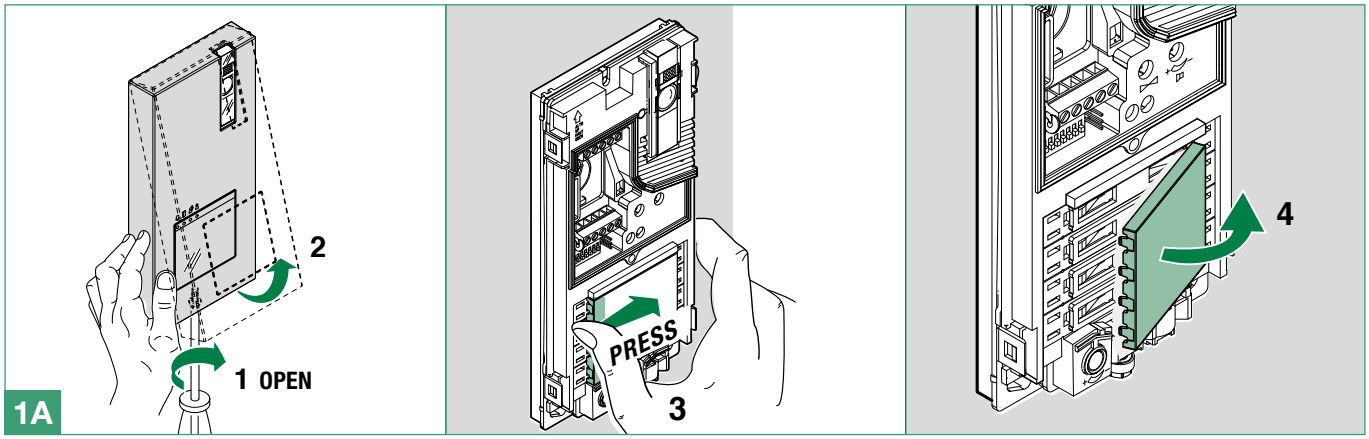

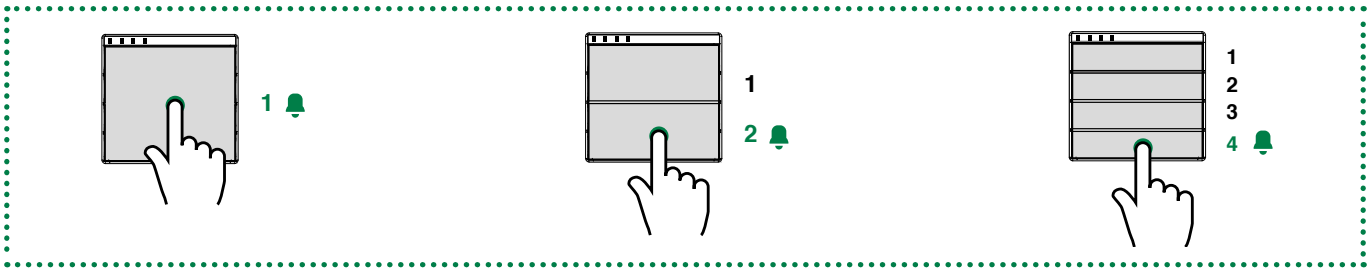

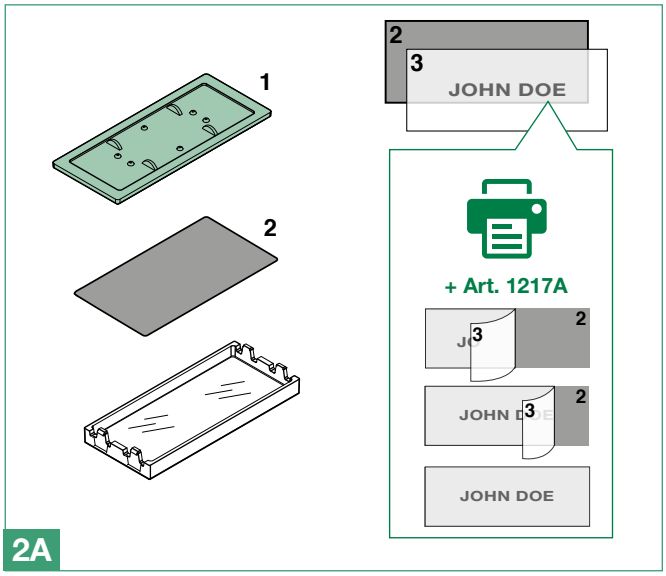

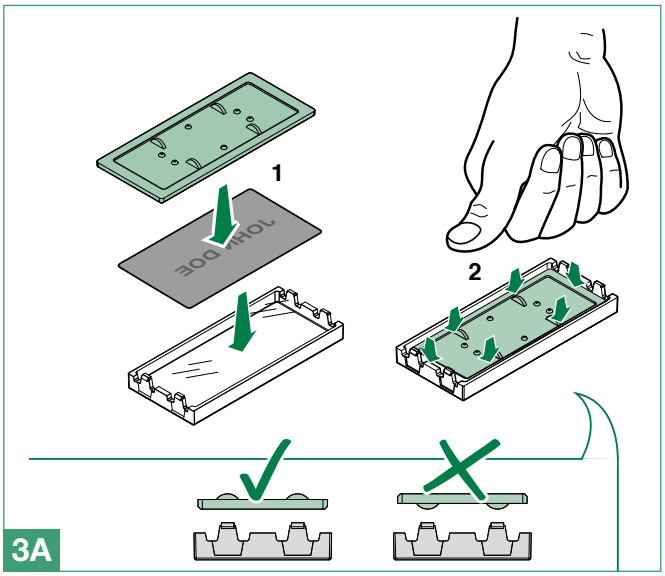

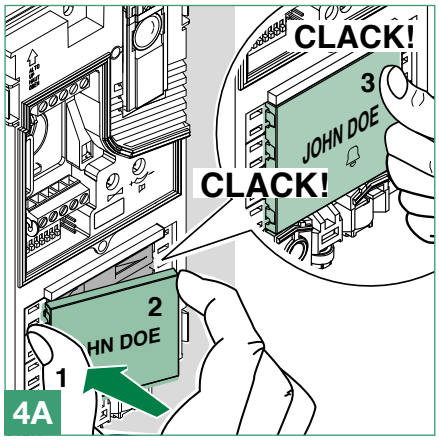

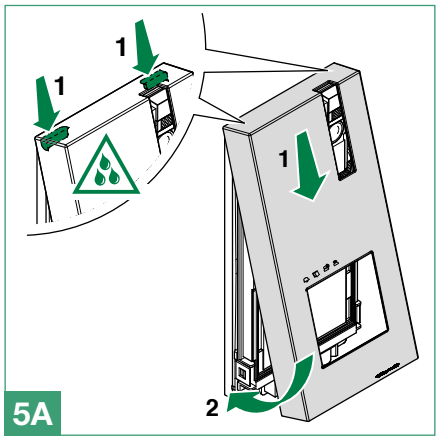

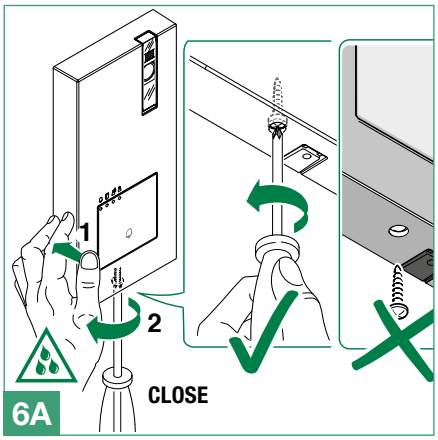

To ensure that the product remains water-tight, make sure that the fixing procedure is carried out correctly.

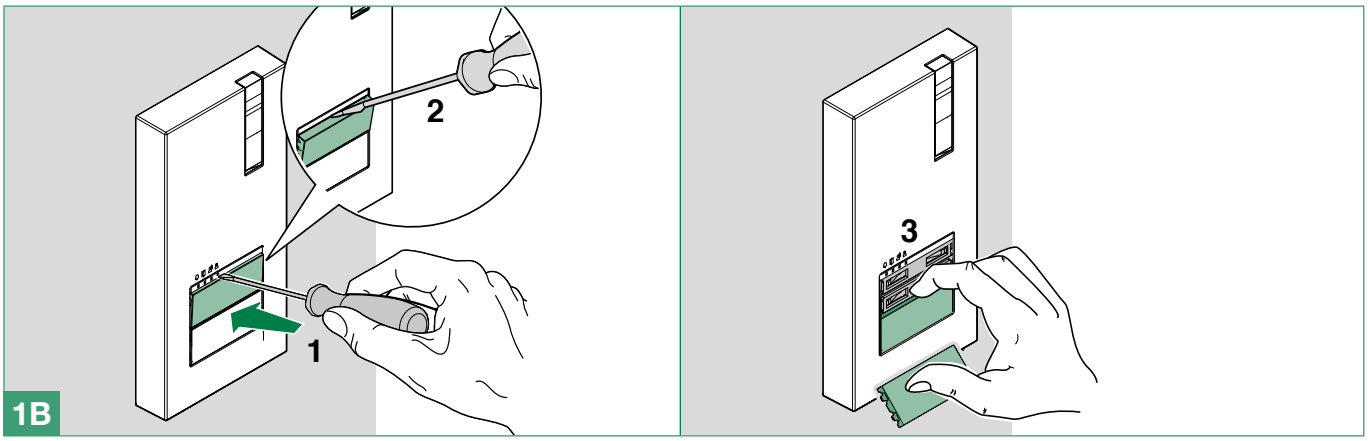
1
2
3
1B

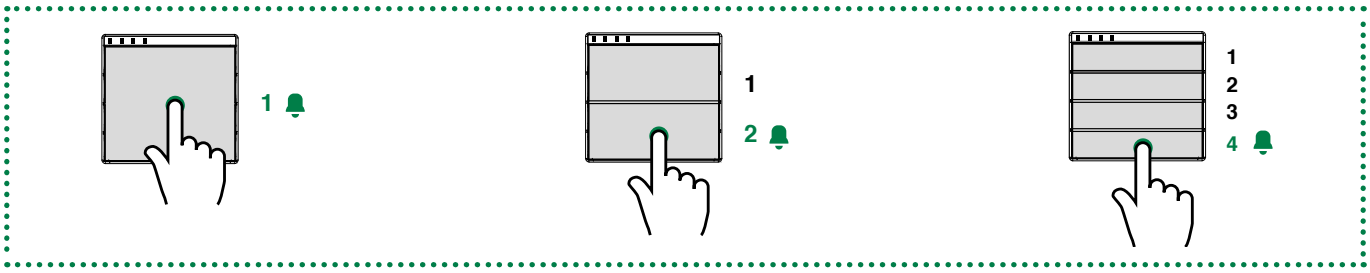
1
1
2
1
2
3
4

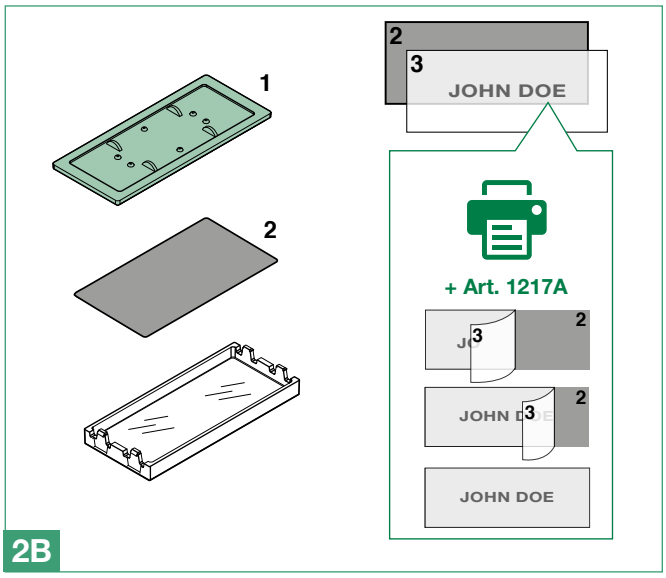
1
2
2
3
JOHN DOE
+ Art. 1217A
JOHN DOE
2B

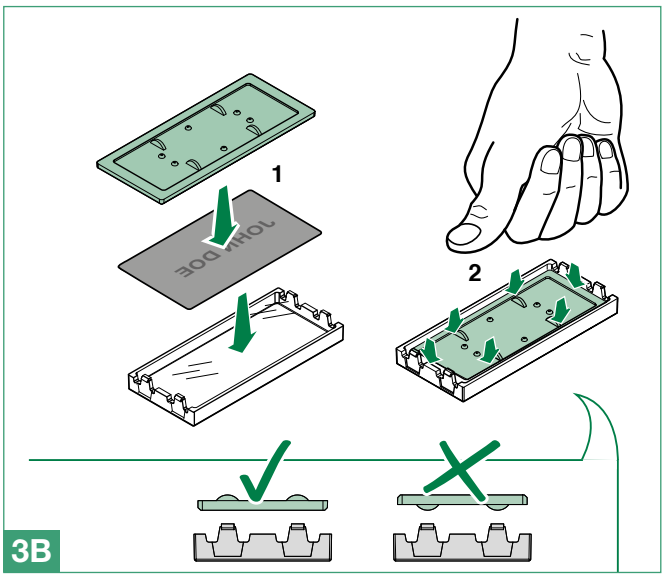
1
2
3B

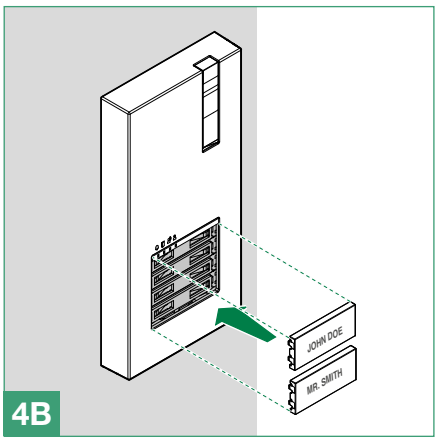
JOHN DOE
MR. SMITH
4B

Addressing table

Code	Dip switch ON	Code	Dip switch ON	Code	Dip switch ON	Code	Dip switch ON	Code	Dip switch ON	Code	Dip switch ON	Code	Dip switch ON	Code	Dip switch ON
1	1	31	1,2,3,4,5	61	1,3,4,5,6	91	1,2,4,5,7	121	1,4,5,6,7	151	1,2,3,5,8	181	1,3,5,6,8	211	1,2,5,7,8
2	2	32	6	62	2,3,4,5,6	92	3,4,5,7	122	2,4,5,6,7	152	4,5,8	182	2,3,5,6,8	212	3,5,7,8
3	1,2	33	1,6	63	1,2,3,4,5,6	93	1,3,4,5,7	123	1,2,4,5,6,7	153	1,4,5,8	183	1,2,3,5,6,8	213	1,3,5,7,8
4	3	34	2,6	64	7	94	2,3,4,5,7	124	3,4,5,6,7	154	2,4,5,8	184	4,5,6,8	214	2,3,5,7,8
5	1,3	35	1,2,6	65	1,7	95	1,2,3,4,5,7	125	1,3,4,5,6,7	155	1,2,4,5,8	185	1,4,5,6,8	215	1,2,3,5,7,8
6	2,3	36	3,6	66	2,7	96	6,7	126	2,3,4,5,6,7	156	3,4,5,8	186	2,4,5,6,8	216	4,5,7,8
7	1,2,3	37	1,3,6	67	1,2,7	97	1,6,7	127	1,2,3,4,5,6,7	157	1,3,4,5,8	187	1,2,4,5,6,8	217	1,4,5,7,8
8	4	38	2,3,6	68	3,7	98	2,6,7	128	8	158	2,3,4,5,8	188	3,4,5,6,8	218	2,4,5,7,8
9	1,4	39	1,2,3,6	69	1,3,7	99	1,2,6,7	129	1,8	159	1,2,3,4,5,8	189	1,3,4,5,6,8	219	1,2,4,5,7,8
10	2,4	40	4,6	70	2,3,7	100	3,6,7	130	2,8	160	6,8	190	2,3,4,5,6,8	220	3,4,5,7,8
11	1,2,4	41	1,4,6	71	1,2,3,7	101	1,3,6,7	131	1,2,8	161	1,6,8	191	1,2,3,4,5,6,8	221	1,3,4,5,7,8
12	3,4	42	2,4,6	72	4,7	102	2,3,6,7	132	3,8	162	2,6,8	192	7,8	222	2,3,4,5,7,8
13	1,3,4	43	1,2,4,6	73	1,4,7	103	1,2,3,6,7	133	1,3,8	163	1,2,6,8	193	1,7,8	223	1,2,3,4,5,7,8
14	2,3,4	44	3,4,6	74	2,4,7	104	4,6,7	134	2,3,8	164	3,6,8	194	2,7,8	224	6,7,8
15	1,2,3,4	45	1,3,4,6	75	1,2,4,7	105	1,4,6,7	135	1,2,3,8	165	1,3,6,8	195	1,2,7,8	225	1,6,7,8
16	5	46	2,3,4,6	76	3,4,7	106	2,4,6,7	136	4,8	166	2,3,6,8	196	3,7,8	226	2,6,7,8
17	1,5	47	1,2,3,4,6	77	1,3,4,7	107	1,2,4,6,7	137	1,4,8	167	1,2,3,6,8	197	1,3,7,8	227	1,2,6,7,8
18	2,5	48	5,6	78	2,3,4,7	108	3,4,6,7	138	2,4,8	168	4,6,8	198	2,3,7,8	228	3,6,7,8
19	1,2,5	49	1,5,6	79	1,2,3,4,7	109	1,3,4,6,7	139	1,2,4,8	169	1,4,6,8	199	1,2,3,7,8	229	1,3,6,7,8
20	3,5	50	2,5,6	80	5,7	110	2,3,4,6,7	140	3,4,8	170	2,4,6,8	200	4,7,8	230	2,3,6,7,8
21	1,3,5	51	1,2,5,6	81	1,5,7	111	1,2,3,4,6,7	141	1,3,4,8	171	1,2,4,6,8	201	1,4,7,8	231	1,2,3,6,7,8
22	2,3,5	52	3,5,6	82	2,5,7	112	5,67	142	2,3,4,8	172	3,4,6,8	202	2,4,7,8	232	4,6,7,8
23	1,2,3,5	53	1,3,5,6	83	1,2,5,7	113	1,5,6,7	143	1,2,3,4,8	173	1,3,4,6,8	203	1,2,4,7,8	233	1,4,6,7,8
24	4,5	54	2,3,5,6	84	3,5,7	114	2,5,6,7	144	5,8	174	2,3,4,6,8	204	3,4,7,8	234	2,4,6,7,8
25	1,4,5	55	1,2,3,5,6	85	1,3,5,7	115	1,2,5,6,7	145	1,5,8	175	1,2,3,4,6,8	205	1,3,4,7,8	235	1,2,4,6,7,8
26	2,4,5	56	4,5,6	86	2,3,5,7	116	3,5,6,7	146	2,5,8	176	5,6,8	206	2,3,4,7,8	236	3,4,6,7,8
27	1,2,4,5	57	1,4,5,6	87	1,2,3,5,7	117	1,3,5,6,7	147	1,2,5,8	177	1,5,6,8	207	1,2,3,4,7,8	237	1,3,4,6,7,8
28	3,4,5	58	2,4,5,6	88	4,5,7	118	2,3,5,6,7	148	3,5,8	178	2,5,6,8	208	5,7,8	238	2,3,4,6,7,8
29	1,3,4,5	59	1,2,4,5,6	89	1,4,5,7	119	1,2,3,5,6,7	149	1,3,5,8	179	1,2,5,6,8	209	1,5,7,8	239	1,2,3,4,6,7,8
30	2,3,4,5	60	3,4,5,6	90	2,4,5,7	120	4,5,6,7	150	2,3,5,8	180	3,5,6,8	210	2,5,7,8	*240	5,6,7,8

* NOTE: code 240 is reserved for the porter switchboard

Key to symbols



Audio/Video kit system



Building Kit audio/video system



SBTOP audio/video system



Audio kit system



SB1 Audio System



SB2 Audio System



Main Monitor



Secondary Monitor

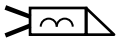

Electric lock



NO button

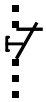

NC button

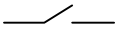

NO contact

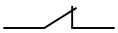

NC contact



Earth connection



3-pin jumper inserted



3-pin jumper open



2-pin jumper open



2-pin jumper inserted



2-pin jumper open



2-pin jumper inserted



Bulb



Additional ringer

Ethernet cable



DIP ON



DIP OFF

1ª edizione 05/2019
cod. 2G41000011

CERTIFIED MANAGEMENT SYSTEMS

ISO 9001 ISO 14001

www.comelitgroup.com

Via Don Arrigoni, 5 - 24020 Rovetta (BG) - Italy

Comelit®
Passion.Technology.Design.