Specifications

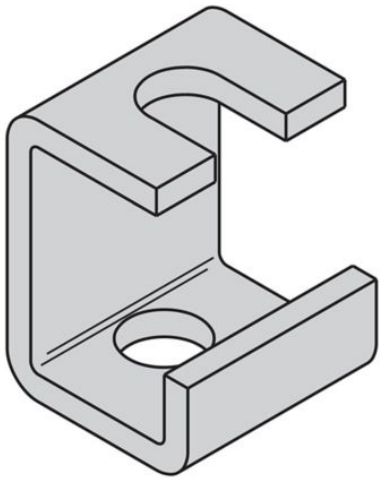

Photo is representative

Eaton SB157BYZ

Eaton B-Line series runway support, Used to suspend cable runway from threaded rod, Includes one slotted hanger support, ASTM A570 structural steel, Yellow zinc

General specifications	
PRODUCT NAME	Eaton B-line series cable runway
CATALOG NUMBER	SB157BYZ
UPC	799038208327
PRODUCT LENGTH/DEPTH	1.09 in
PRODUCT HEIGHT	1.5625 in
PRODUCT WIDTH	1.5 in
PRODUCT WEIGHT	0.34 lb
CERTIFICATIONS	UL Listed
PRODUCT TYPE	Cable runway

Powering Business Worldwide

Product specifications

APPLICATION	Used to suspend cable runway from threaded rod
TYPE	Slotted runway support
MATERIAL DETAILS	Yellow zinc ASTM A570 steel
SPECIAL FEATURES	Includes one slotted hanger support

Resources

BROCHURES	Redi-Rail runway brochure
SPECIFICATIONS AND DATASHEETS	Eaton Specification Sheet - SB157BYZ

PROJECT NAME:	
PROJECT NUMBER:	
PREPARED BY:	
DATE:	

Eaton Corporation plc Eaton House
30 Pembroke Road
Dublin 4, Ireland
Eaton.com

© 2026 Eaton. All Rights Reserved.

Follow us on social media to get the latest product and support information.