INSTALLATION GUIDE

Instructions to install GO Wireway on top of any flooring surface



COMPONENTS

Typical for each GO Wireway installation

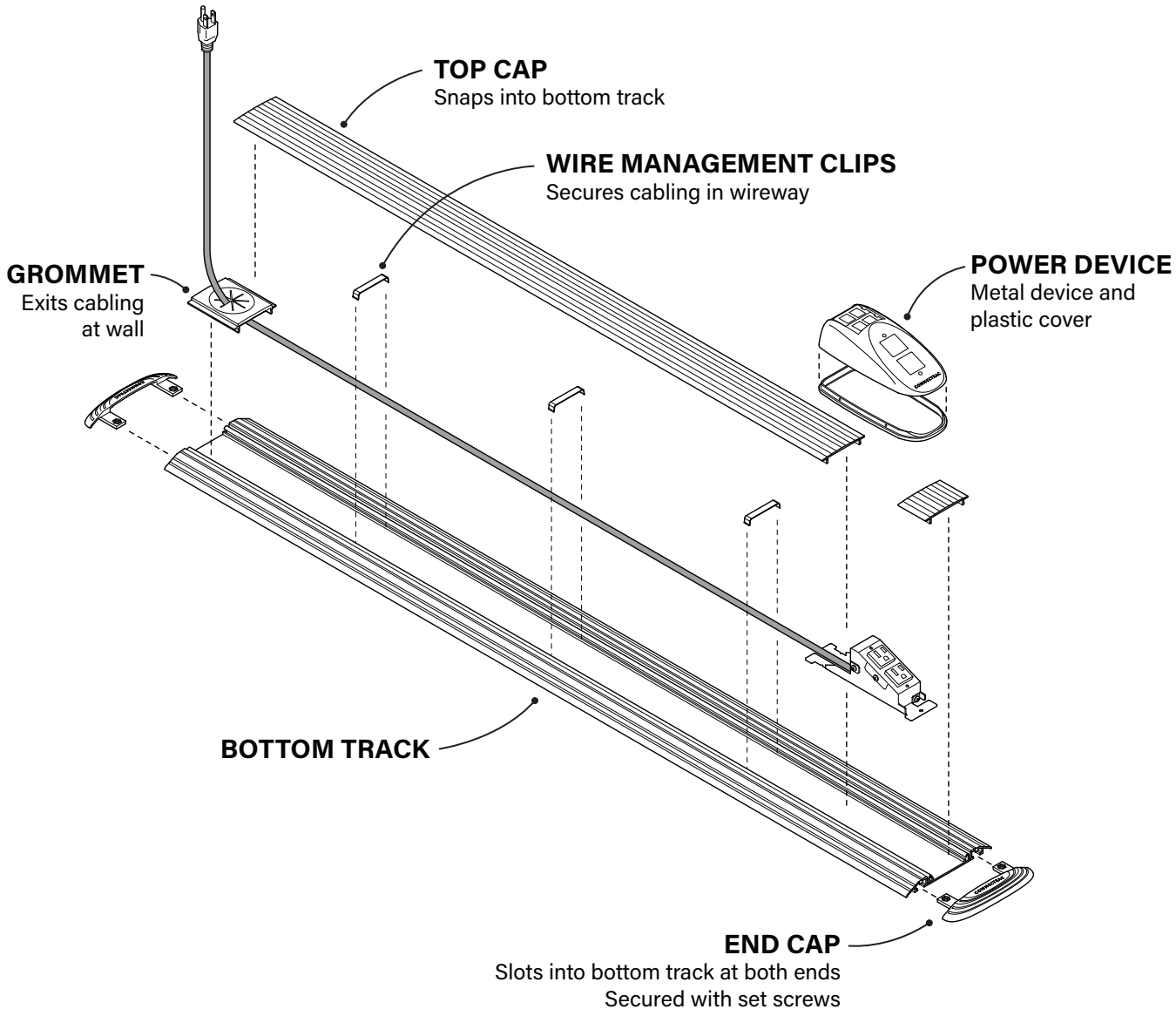

Not recommended for high-traffic areas.

QUESTIONS? CALL US AT 877.480.5637

Overview Video available at:
https://vimeo.com/250336330

INSTALLATION BASICS - 6′ GO WIREWAY

ATTACH END CAPS

Flip the track and tighten the set screws.

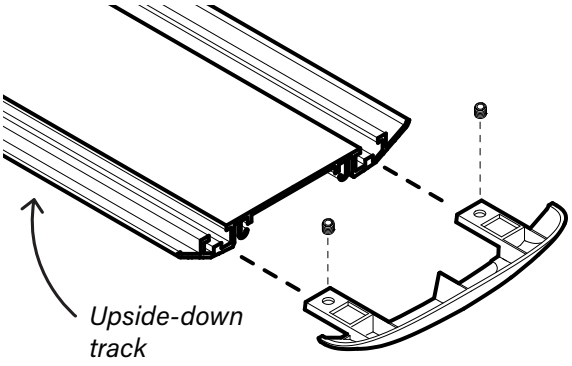

You can use double-sided or friction tape, or fasten the track to the floor depending on your application.

PASS CABLING THROUGH GROMMET

Then snap the grommet into the track at the wall.

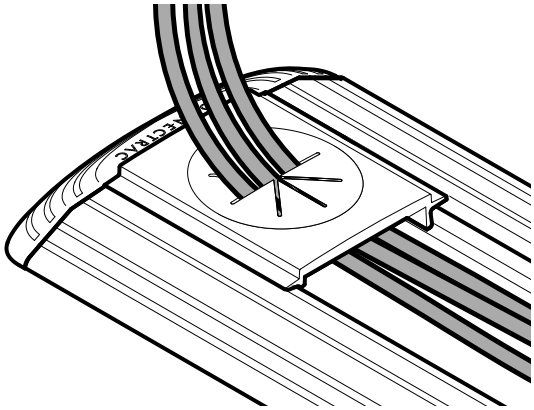

MOUNT POWER DEVICE

Install the small piece of top cap at the end of the track, then slide the device under it.

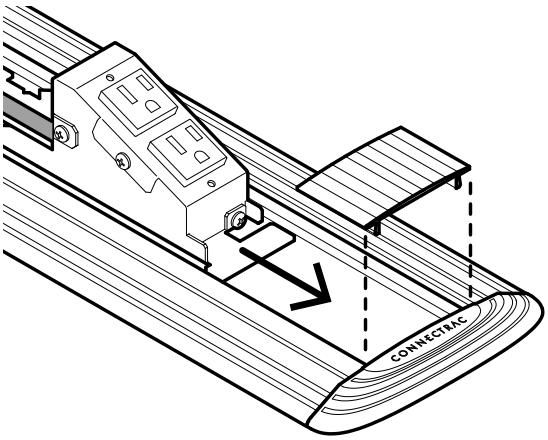

Mount the device with included double-sided tape.

INSTALL TOP CAP

Manage cabling with included metal clips, then install the longer piece of top cap.

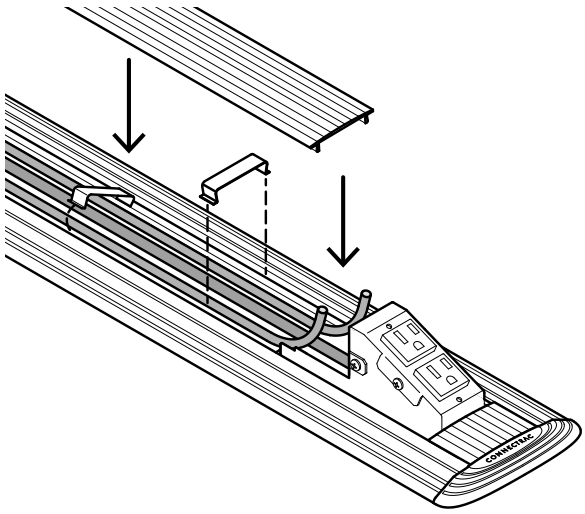

INSTALLATION BASICS - 12′ GO WIREWAY

USE INCLUDED COUPLERS

Insert as shown, then tighten set screws.
These help align the bottom tracks.

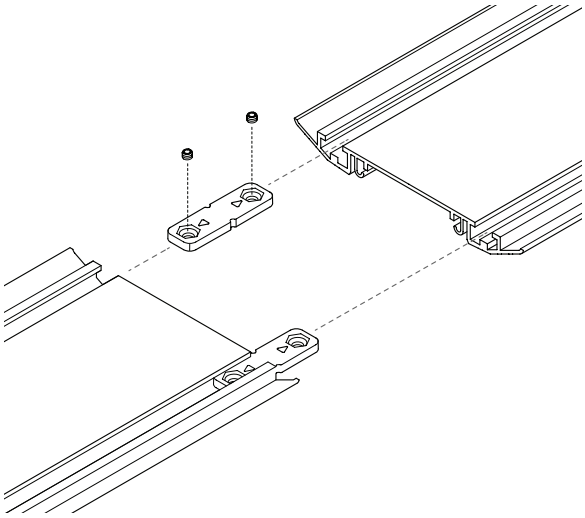

FASTEN IT DOWN

This is necessary when combining tracks.

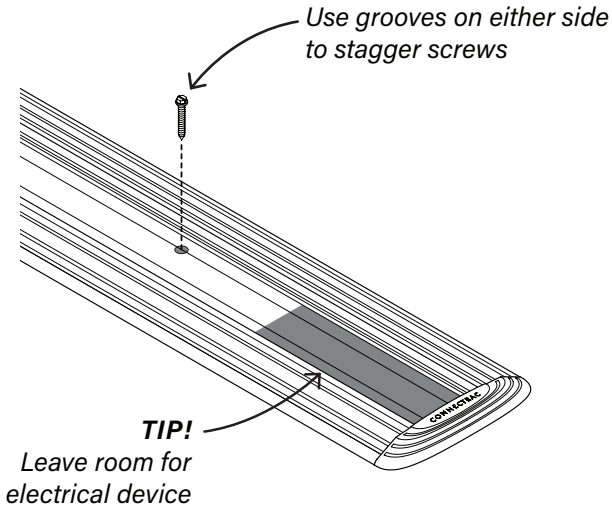

STAGGER BOTTOM TRACK AND TOP CAP

Offset the bottom track joint from the top cap joint.
This helps strengthen the assembly.

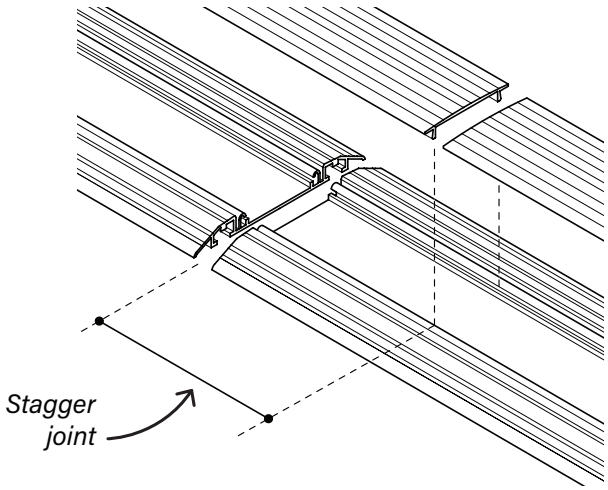

CAN BE TRIMMED TO LENGTH

The wireway can be trimmed
if you need a different length.

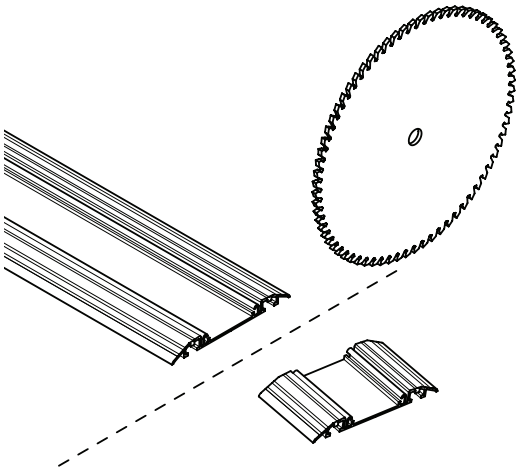

INSTALL THE COVER

Terminate any data cabling in the included modules, or leave open to pass cabling through. Snap the trim skirt into the bottom of the device cover - attach the plastic cover to the device, ***THEN GO!***

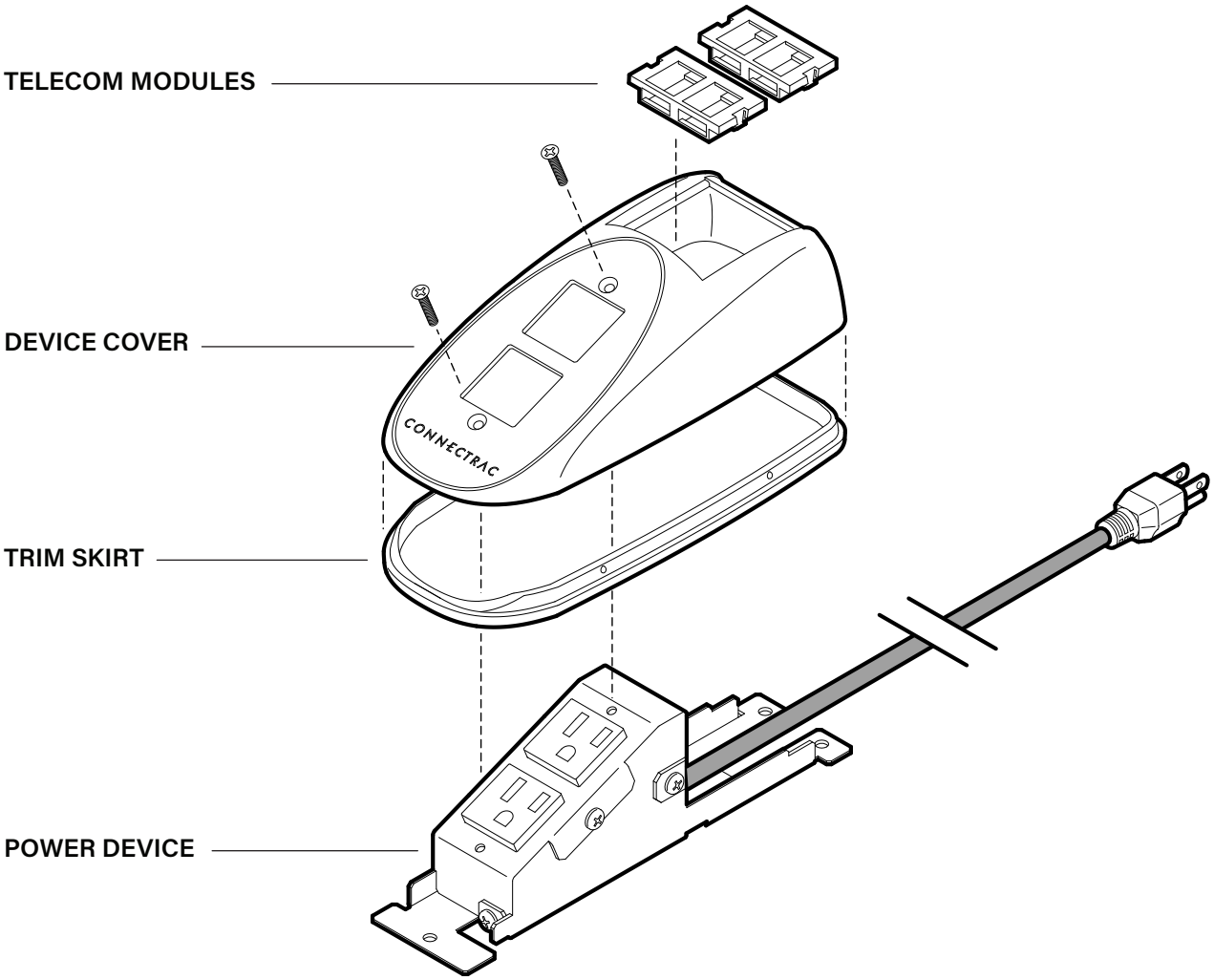

DEVICE INFORMATION	
NAME:	Connectrac GO Duplex Receptacle
DESCRIPTION:	The GO power receptacle is a pre-wired outlet device. The wiring system contains a 3-wire / single-circuit system, and the metal housing contains (2) NEMA 5-15R receptacles. It includes a plastic cover which incorporates a modular telecom opening capable of mounting (4) keystone connectors.
ELECTRICAL LISTING:	**US:** This device has been tested to UL Subject 962A standards and listed by ETL / Intertek. The device is identified with the ETL Listed Mark. **Canada:** This device has been tested to CAN/CSA 22.2 #21 and is listed by ETL / Intertek. The device is identified with the cETL Listed Mark.