CONNECTRAC®

A brand of legrand®



GO WIREWAY SPEC GUIDE

Installs on top of any flooring surface



It's as Easy as Place, Plug, GO!

The GO Wireway provides pluggable power and data cable management and installs on top of any flooring surface. It plugs directly into any existing wall outlet, allowing connectivity to easily move or change as needed.

Features & Benefits

- **Perfect for conference rooms, lecterns, desks, and more**
- **Accommodates a single power/data point with a single circuit**
- **Includes 2 power outlets, 4 data ports, and low-profile transition ramps**
- **Available in 6' and 12' lengths**
- **Tested to UL standards 962A in US and C22.2 #21 in Canada**

COMPONENTS

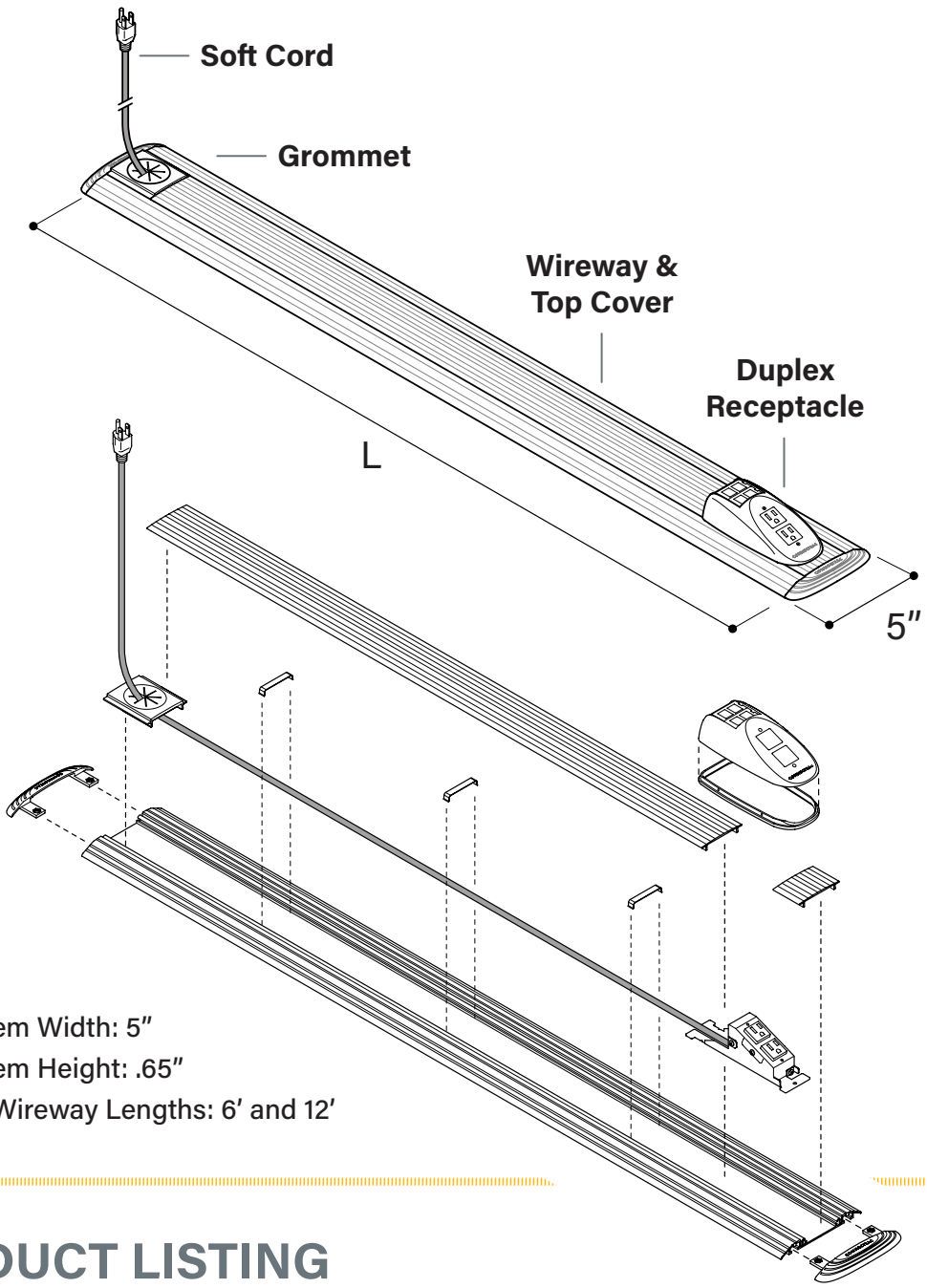

Total System Width: 5″
Total System Height: .65″
Available Wireway Lengths: 6′ and 12′

PRODUCT LISTING

Part Number	*Description*
GO-072-AL	Connectrac GO 6′ kit w/ Clear Anodized finish, 108″ flexible cord w/ plug & 15A duplex receptacle
GO-144-AL	Connectrac GO 12′ kit w/ Clear Anodized finish, 180″ flexible cord w/ plug & 15A duplex receptacle