TROVE™

Access & Power Integration

Altronix/SALTO Kits

Models Include:

T1SAK3F4
4 Door Kit with Fused Outputs

Fully assembled kit includes:
- Trove1 enclosure with TSA1 Altronix/SALTO backplane
- (1) eFlow6NB - Power Supply/Charger
- (1) ACM4 - Fused Access Power Controller
- (1) VR6 - Voltage Regulator
- (1) PDS8 - Dual Input Fused Power Distribution Module

T2SAK7F8
8 Door Kit with Fused Outputs

Fully assembled kit includes:
- Trove2 enclosure with TSA2 Altronix/SALTO backplane
- (1) eFlow104NB - Power Supply/Charger
- (1) ACM8 - Fused Access Power Controller
- (1) VR6 - Voltage Regulator
- (1) PDS8 - Dual Input Fused Power Distribution Module

T2SAK75F12
12 Door Kit with Fused Outputs

Fully assembled kit includes:
- Trove2 enclosure with TSA2 Altronix/SALTO backplane
- (1) eFlow104NB - Power Supply/Charger
- (1) eFlow102NB - Power Supply/Charger
- (1) ACM8 - Fused Access Power Controller
- (1) ACM4 - Fused Access Power Controller
- (1) PDS8 - Dual Input Fused Power Distribution Module

T1SAK3F4D
4 Door Kit with PTC Outputs

Fully assembled kit includes:
- Trove1 enclosure with TSA1 Altronix/SALTO backplane
- (1) eFlow6NB - Power Supply/Charger
- (1) ACM4CB - PTC Access Power Controller
- (1) VR6 - Voltage Regulator
- (1) PDS8CB - Dual Input PTC Power Distribution Module

T2SAK7F8D
8 Door Kit with PTC Outputs

Fully assembled kit includes:
- Trove2 enclosure with TSA2 Altronix/SALTO backplane
- (1) eFlow104NB - Power Supply/Charger
- (1) ACM8CB - PTC Access Power Controller
- (1) VR6 - Voltage Regulator
- (1) PDS8CB - Dual Input PTC Power Distribution Module

T2SAK75F12D
12 Door Kit with PTC Outputs

Fully assembled kit includes:
- Trove2 enclosure with TSA2 Altronix/SALTO backplane
- (1) eFlow104NB - Power Supply/Charger
- (1) eFlow102NB - Power Supply/Charger
- (1) ACM8CB - PTC Access Power Controller
- (1) ACM4CB - PTC Access Power Controller
- (1) PDS8CB - Dual Input PTC Power Distribution Module

All components of these Trove kits are UL Listed sub-assemblies.
Please refer to the included corresponding Sub-Assembly Installation Guides for further information.

Installation Guide

CE

Altronix®

More than just power.™

All registered trademarks are property of their respective owners.

Rev. TSAK_032919

Installing Company: _____ Service Rep. Name: _____

Address: _____ Phone #: _____

Overview:

Altronix Trove SALTO kits are pre-assembled and consist of Trove1SA1 or Trove2SA2 enclosure/backplane with factory installed Altronix power supply/charger(s) and sub-assemblies. These kits also accommodate various combinations of SALTO modules for up to twelve (12) doors in a single enclosure.

Configuration Chart:

Altronix Model Number	120VAC 60Hz Input Current (A)	Power Supply Board Input Fuse Rating	Power Supply Board Battery Fuse Rating	Nominal DC Output Voltage: Power Supply 1 [DC] Output Range (VDC)	Power Supply 1 [Aux] Output Range (VDC)	Power Supply 2 [DC] Output Range (VDC)	Power Supply 2 [Aux] Output Range (VDC)	Maximum Supply Current for Main and Aux. Outputs on Power Supply board and ACM4(CB)/ ACM8(CB) Access Power Controller's outputs	Fail-Safe/Fail-Secure Outputs	Current Per ACM4(CB)/ ACM8(CB) Output (A)	ACM4(CB)/ACM8(CB) Board Input Fuse (PTC) Rating	ACM4(CB)/ACM8(CB) Board Output Fuse (PTC) Rating	PDS8(CB) Board Input Fuse (PTC) Rating	PDS8(CB) Board Output Fuse (PTC) Rating
T1SAK3F4	3.5	5A/ 250V	10A/ 32V	20.19-26.4	20.19-26.4	–	–	24VDC @ 5.6A	4	2.5	10A/ 32V	3A/ 32V	10A/ 32V	3A/ 32V
T1SAK3F4D										2.0	9A	2.5A	9A	2.5A
T2SAK7F8	4.5	6.3A/ 250V	15A/ 32V	20.17-26.4	20.28-26.4	–	–	24VDC @ 9.2A	8	2.5	10A/ 250V	3.5A/ 250V	10A/ 32V	3A/ 32V
T2SAK7F8D										2.0		2.5A	9A	2.5A
T2SAK75F12	8	6.3A/250V 5A/250V	15A/ 32V	20.17-26.4	20.28-26.4	10.03-13.2	10.03-13.2	12VDC @ 9.3A 24VDC @ 9.2A	12	2.5	10A/ 250V	3.5A/ 250V	10A/ 32V	3A/ 32V
T2SAK75F12D										2.0		2.5A	9A	2.5A

Installation Instructions:

Wiring methods shall be in accordance with the National Electrical Code/NFPA 70/ANSI, and with all local codes and authorities having jurisdiction. Product is intended for indoor use only.

1. Remove backplane(s) from enclosure. Do not discard hardware.
2. Mark and predrill holes in the wall to line up with the top three keyholes in the enclosure. Install three upper fasteners and screws in the wall with the screw heads protruding. Place the enclosure's upper keyholes over the three upper screws, level and secure. Mark the position of the lower three holes. Remove the enclosure. Drill the lower holes and install the three fasteners. Place the enclosure's upper keyholes over the three upper screws. Install the three lower screws and make sure to tighten all screws.
3. Mount included UL Listed tamper switch (Altronix Model TS112 or equivalent) in desired location, opposite hinge. Slide the tamper switch bracket onto the edge of the enclosure approximately 2" from the right side *(Fig. 1, pg. 2)*. Connect tamper switch wiring to the Access Control Panel input or the appropriate UL Listed reporting device. To activate alarm signal open thedoor of the enclosure.
4. Connect unswitched AC power (120VAC 60Hz) to terminals marked [L, N].
   Use 14 AWG or larger for all power connections. Secure green wire lead to earth ground.
   Green "AC" LED on power supply board will turn on.
   This light can be seen through the LED lens on the door of the enclosure.
   Keep power-limited wiring separate from non power-limited wiring (120VAC 60Hz Input, Battery Wires). Minimum 0.25" spacing must be provided.
   CAUTION: Do not touch exposed metal parts. Shut branch circuit power before installing or servicing equipment. There are no user serviceable parts inside. Refer installation and servicing to qualified service personnel.
5. Measure voltage before connecting devices. This helps avoiding potential damage.
6. Mount SALTO modules to TSA2 backplane, refer to *pg. 3, 4, 5*.
7. Refer to the *eFlow Power Supply/Charger Installation Guide* for eFlow6NB, eFlow102NB, eFlow104NB and corresponding *Sub-Assembly Installation Guides* for ACM4(CB), ACM8(CB), PDS8(CB), VR6 for further installation instructions.

Fig. 1

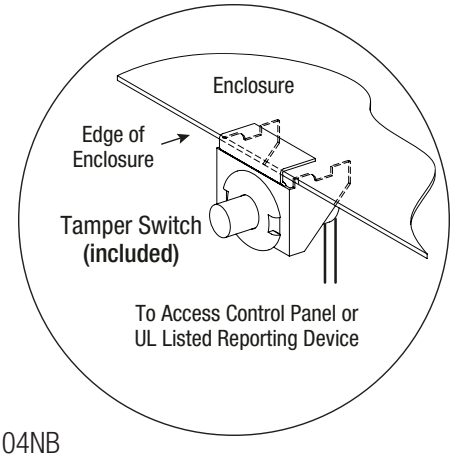

Hardware:

Nylon Spacer | 5/16" Pan Head Screw | Lock Nut

T1SAK3F4 and T1SAK3F4D: Configuration of SALTO Modules:

1. Fasten spacers onto metal pems configuration (A) of backplane *(Fig. 2, pg. 3)*.
2. Position SALTO modules over corresponding spacers and mount them utilizing pan head screws (provided) *(Fig. 2a, pg. 3)*.
3. Mount backplane to enclosure with hardware.

Access Controller Position Chart for the Following Models:

SALTO Access Controller	Pem Mounting
CU42E0, CU4200 or CU4EB8	A

Fig. 2

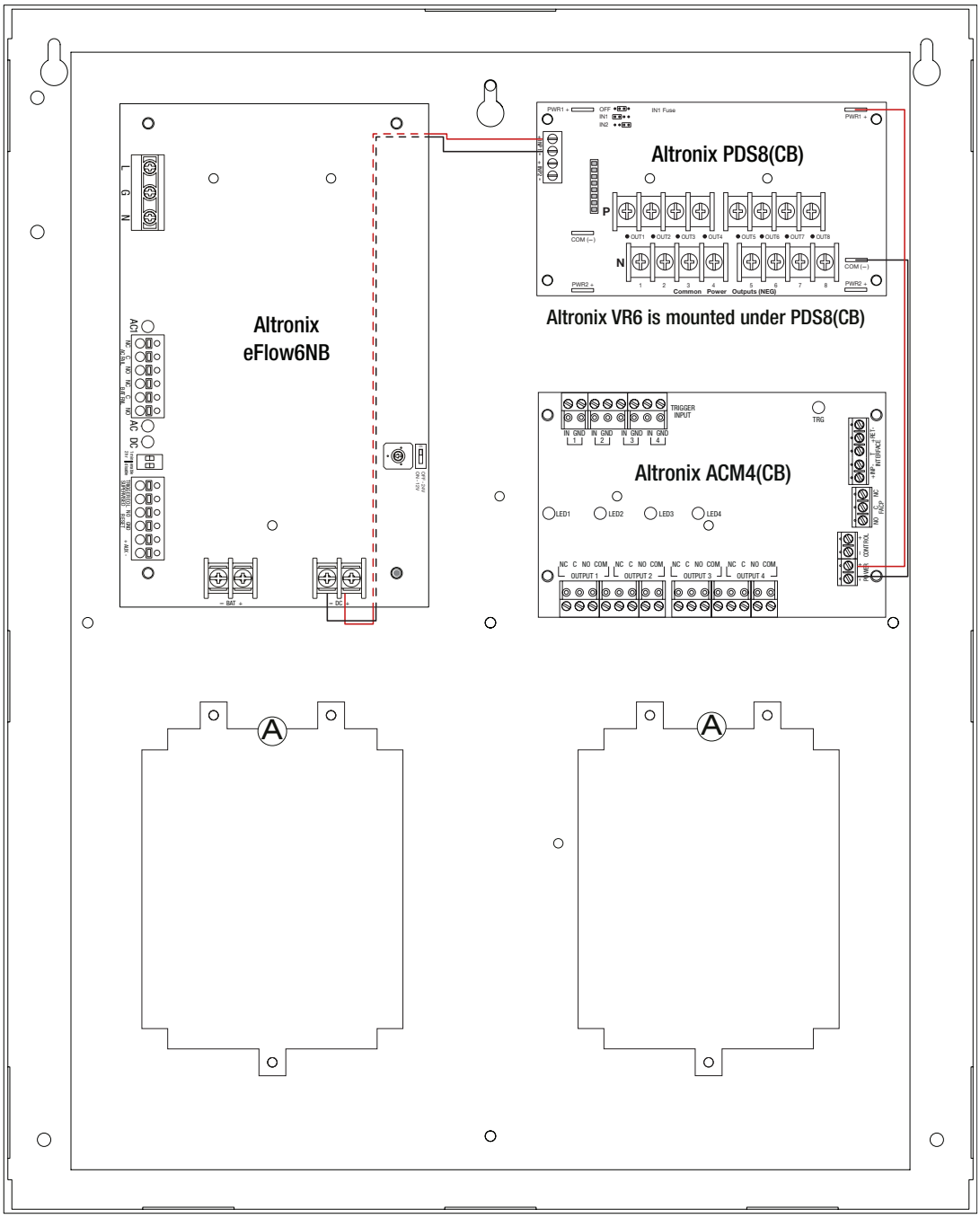

Fig. 2a

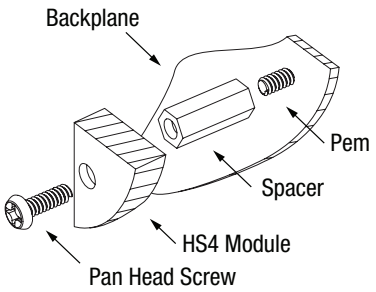

T2SAK7F8 and T2SAK7F8D: Configuration of SALTO Modules:

1. Fasten spacers onto metal pems configuration (A) of backplane *(Fig. 3, pg. 4)*.
2. Position SALTO modules over corresponding spacers and mount them utilizing pan head screws (provided) *(Fig. 3a, pg. 4)*.
3. Mount backplane to enclosure with hardware.

Access Controller Position Chart for the Following Models:

SALTO Access Controller	Pem Mounting
CU42E0, CU4200 or CU4EB8	A

Fig. 3

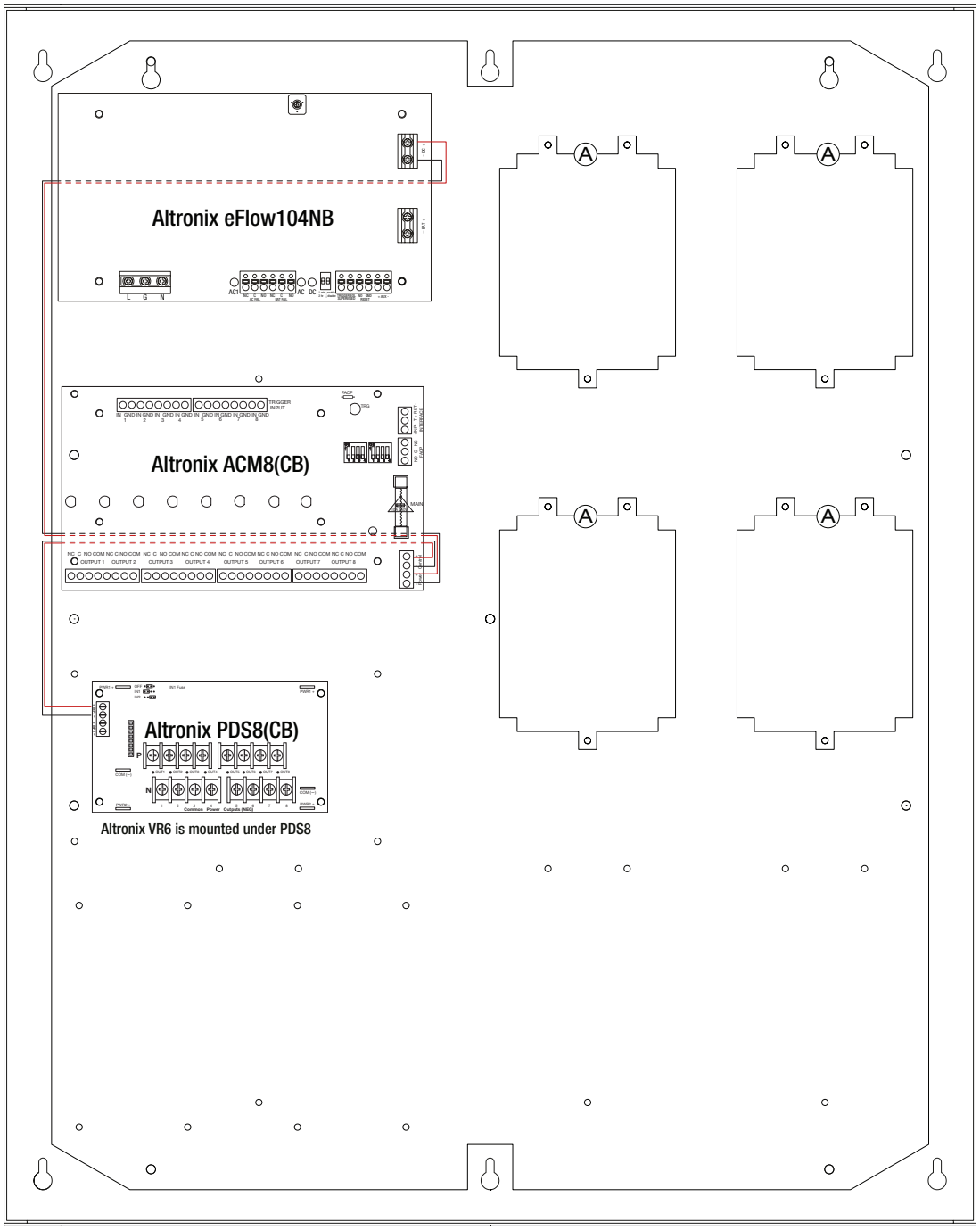

Fig. 3a

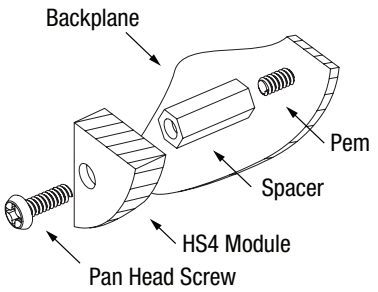

T2SAK75F12 and T2SAK75F12D: Configuration of SALTO Modules:

1. Fasten spacers onto metal pems configuration (A) of backplane *(Fig. 4, pg. 5)*.
2. Position SALTO modules over corresponding spacers and mount them utilizing pan head screws (provided) *(Fig. 4a, pg. 5)*.
3. Mount backplane to enclosure with hardware.

Access Controller Position Chart for the Following Models:

SALTO Access Controller	Pem Mounting
CU42E0, CU4200 or CU4EB8	A

Fig. 4

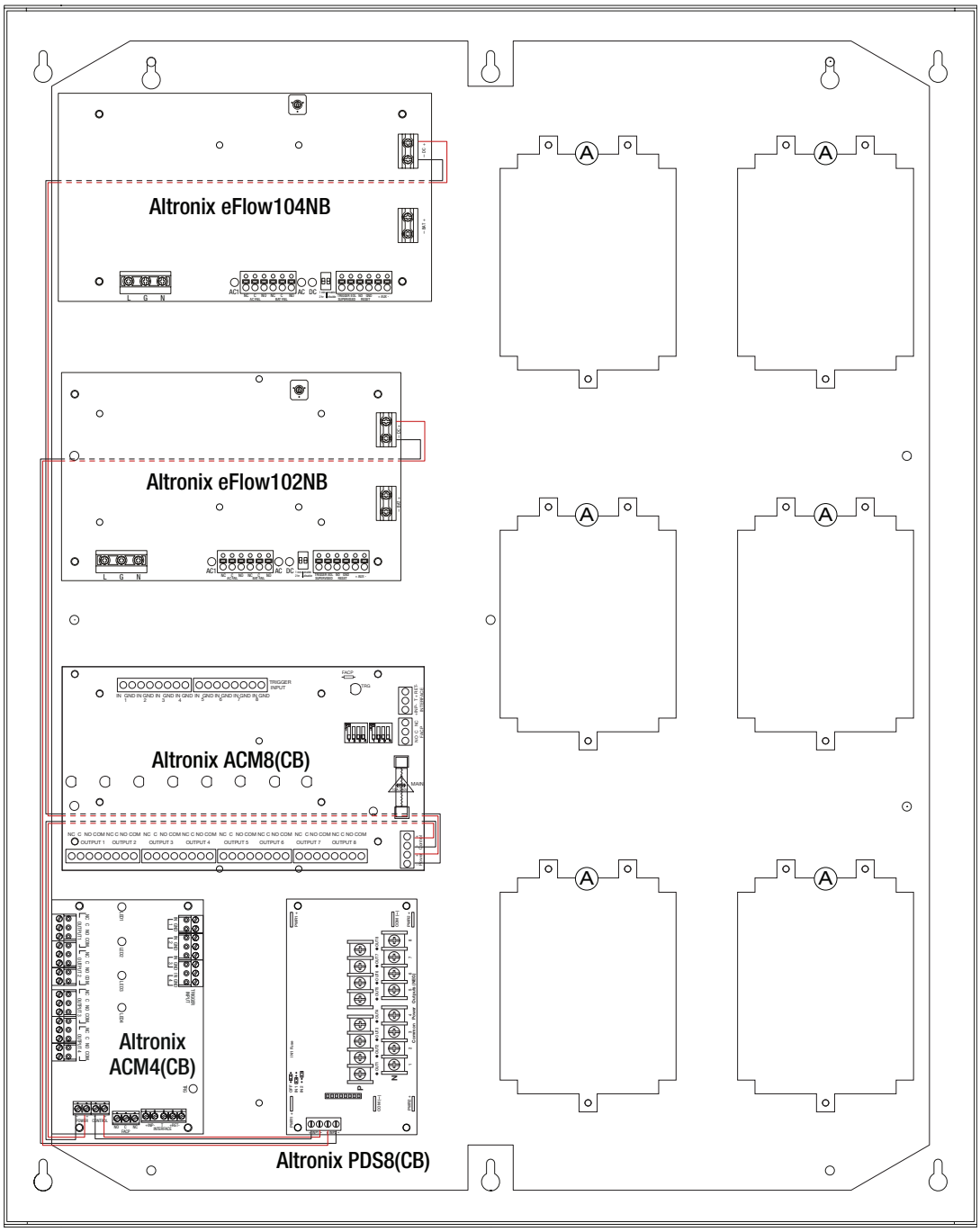

Fig. 4a

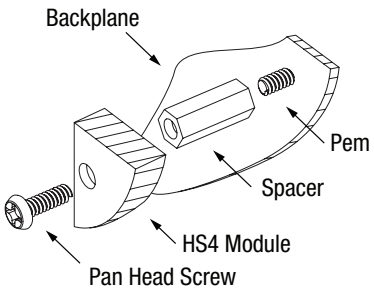

eFlow Power Supply/Chargers can be Controlled and Monitored while Reporting Power/Diagnostics from Anywhere over the Network...

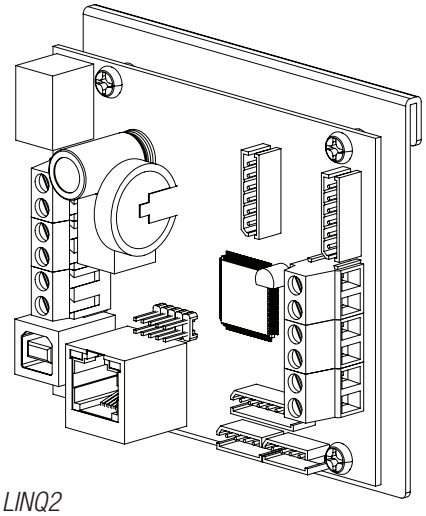

LINQ2

LINQ2 - Network Communication Module

LINQ2 provides remote IP access to real-time data from eFlow power supply/chargers to help keep systems up and running at optimal levels. It facilitates fast and easy installation and set-up, minimizes system downtime, and eliminates unnecessary service calls, which helps reduce Total Cost of Ownership (TCO) - as well as creating a new source of Recurring Monthly Revenue (RMR).

Features:

- UL Listed in the U.S. and Canada.
- Local or remote control of up to (2) two Altronix eFlow power output(s) via LAN and/or WAN.
- Monitor real time diagnostics: DC output voltage, output current, AC & battery status/service, input trigger state change, output state change and unit temperature.
- Access control and user managment: Restrict read/write, Restrict users to specific resources
- Two (2) integral network controlled Form “C” Relays.
- Three (3) programmable input triggers: Control relays and power supplies via external hardware sources.
- Email and Windows Dashboard notifications
- Event log tracks history.
- Secure Socket Layer (SSL).
- Programmable via USB or web browser - includes operating software and 6 ft. USB cable.

LINQ2 Mounts Inside any Trove Enclosure

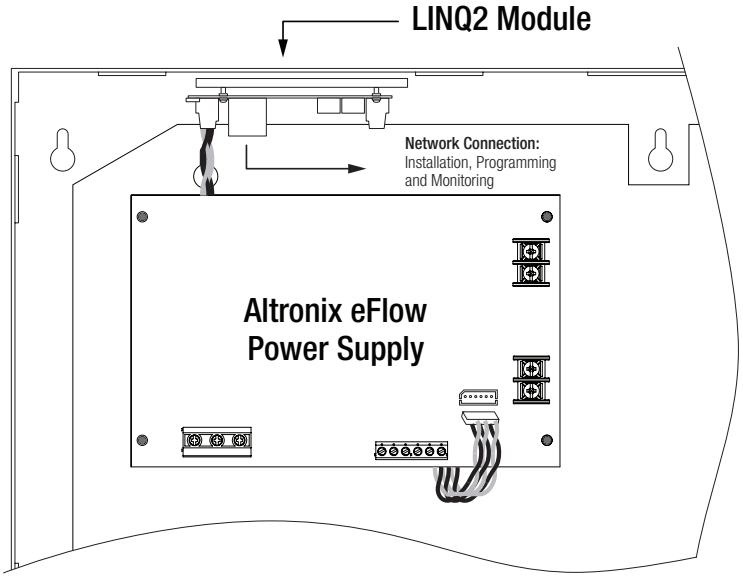

T1SAK3F4(D) Enclosure Dimensions (H x W x D)**:**

18” x 14.5” x 4.625” (457mm x 368mm x 118mm)

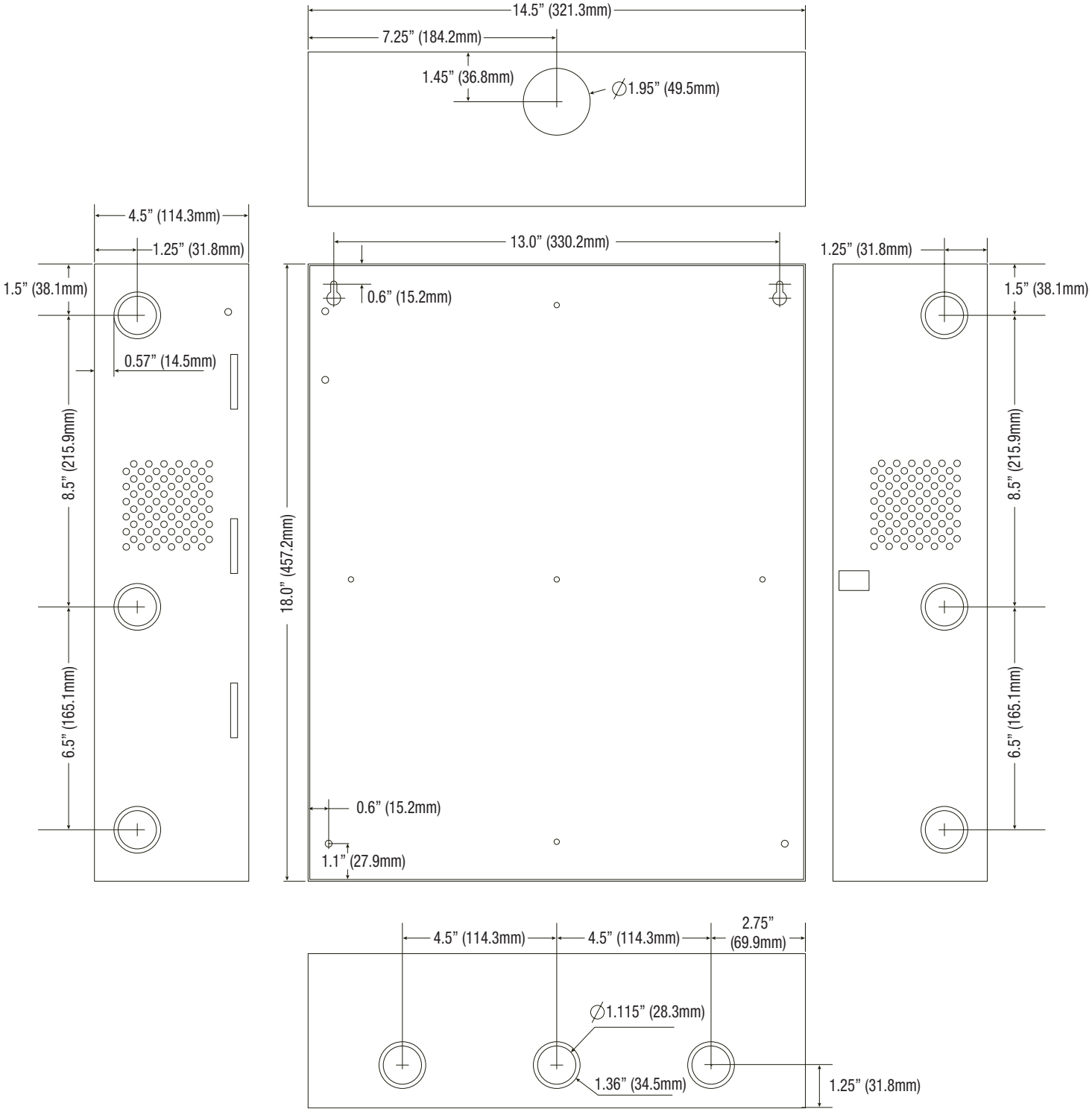

T2SAK7F8(D) and T2SAK75F12(D) Enclosure Dimensions (H x W x D)**:**

27.25” x 21.75” x 6.5” (692.15mm x 552.5mm x 165.1mm)

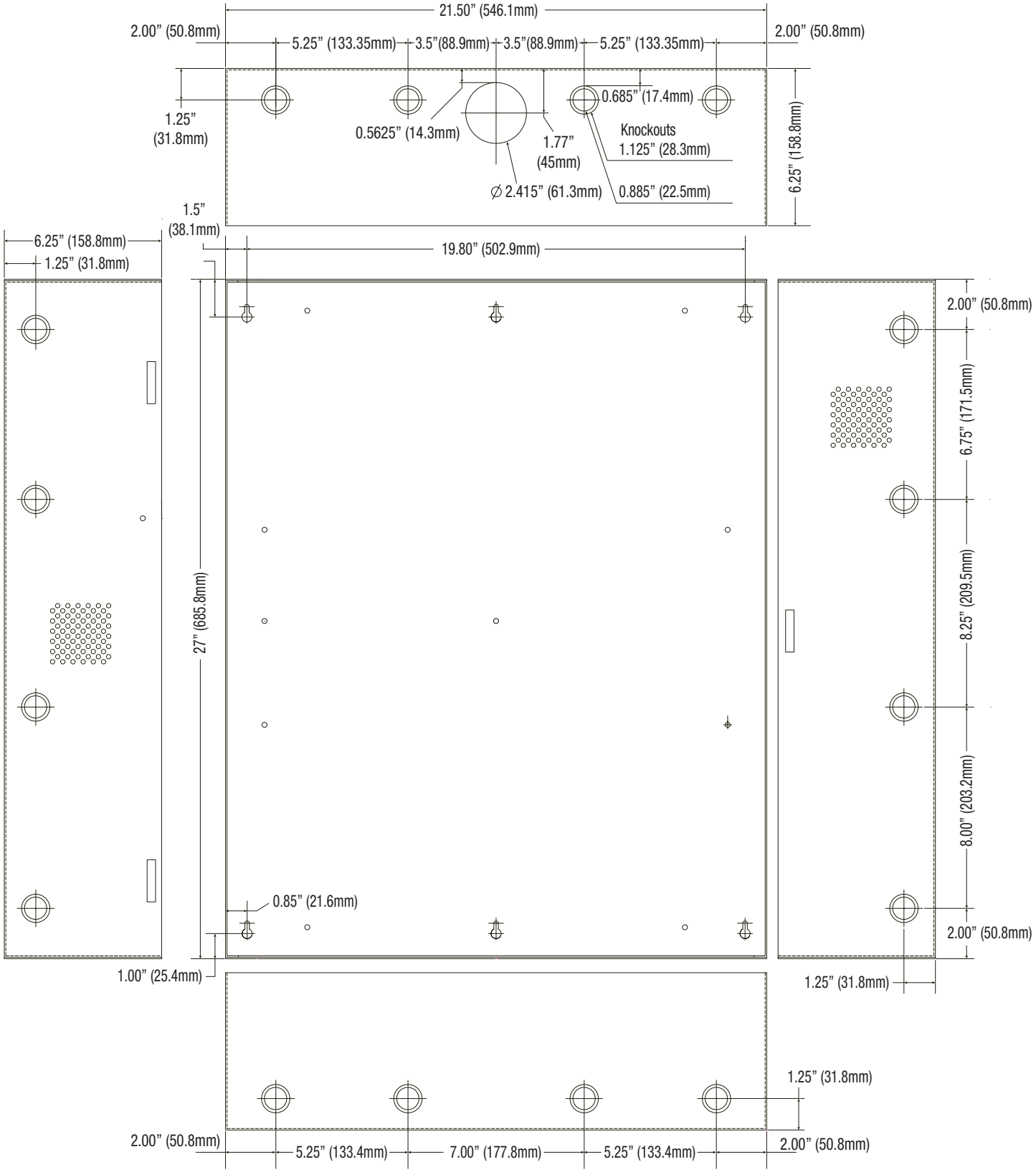

Altronix is not responsible for any typographical errors.

140 58th Street, Brooklyn, New York 11220 USA | phone: 718-567-8181 | fax: 718-567-9056
web site: www.altronix.com | e-mail: info@altronix.com | Lifetime Warranty