PYL12V140TT

Valve Regulated Lead-Acid (VRLA)
Absorbed Glass Mat (AGM)

GS PYL Series with ***HT X Alloy™***, high temperature batteries optimized for performance and life

SPECIFICATIONS

Battery Model:	PYL12V140TT
Nominal Voltage:	12
Capacity: 8-hr rate, 1.75vpc @ 25°C (77°F)	140.0
20-hr rate, 1.75vpc @ 25°C (77°F)	158.0
Case Material:	UL94V-0
Terminal Options:	Top - M6
Terminal Torque (Terminals using Bolts):	M6, 4.9Nm (43 in-lb)
Dimensions:	
◦ Length (mm|inches)	341.0 | 13.43
◦ Width (mm|inches)	173.0 | 6.81
◦ Case Height (mm|inches)	281.0 | 11.06
◦ Height over Terminal (mm|inches)	281.0 | 11.06
Weight (kg|lbs):	48.6 | 107.14
Short circuit current (A):	3205
Maximum charge current (A):	35.0
Internal Resistance (mΩ):	2.7

GENERAL

Design Life:	10+ Years
	More than 5 years at 35°C
	Exceeds Telecordia GR-1200 criteria
Flame arresting one-way vent	
Epoxy sealed terminals to prevent post leaks	
Rugged ABS cases to minimize handling damage	
Storage:	
◦ Capacity loss per month at 25°C (77°F)	~3%
◦ In fully charged condition	-20°C to 60°C (-4°F to 140°F)
Operating Temperature Range:	-40°C to 65°C (-40°F to 149°F)
◦ Refer to Product Manual for optimum temperature range	
Float Charge Voltage:	
◦ Charge voltage at 25°C (77°F)	2.275±1%/cell
◦ Temperature correction factor from 25°C (77°F)	-3mV per °C/cell

Features providing longer life:

HT X Alloy™
Proprietary Additives
Lead Calcium Grids
Primary Lead
Strategic use of Tin
Optimized AGM Separators

Applications:

Telecom
Broadband
Emergency Lighting
Signaling and Traffic
Energy
Switchgear & Control

CERTIFICATIONS/COMPLIANCE

- ISO 9001
- ISO 14001
- VZ TPR-9802
- GR-4228-CORE
- GR-1089
- GR-63 NEBS
- IEC 60896-21
- UL recognized component, UL1989
- TAA Compliant - Available
- DRC Conflict Free

TERMINAL OPTIONS

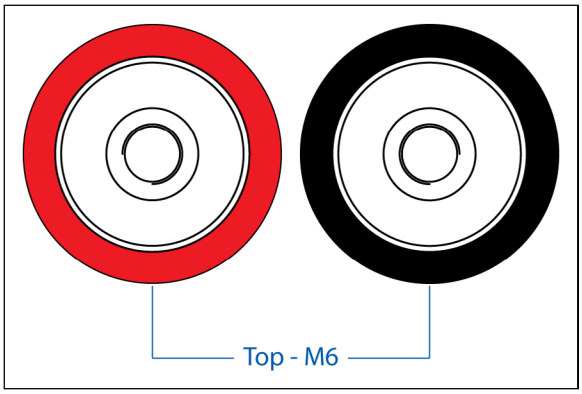

Non-spillable, meets or exceeds DOT and IATA requirements for non-hazardous transportation

Pb MH12970

GS YUASA
Creating the Future of Energy

(800) 472-2879
www.gsyuasa-es.com
sales@gsyuasa-es.com

GS Yuasa Energy Solutions, Inc
1150 Northmeadow Pkwy, Suite 110
Roswell, GA 30076

PYL12V140TT

Valve Regulated Lead-Acid (VRLA)
Absorbed Glass Mat (AGM)

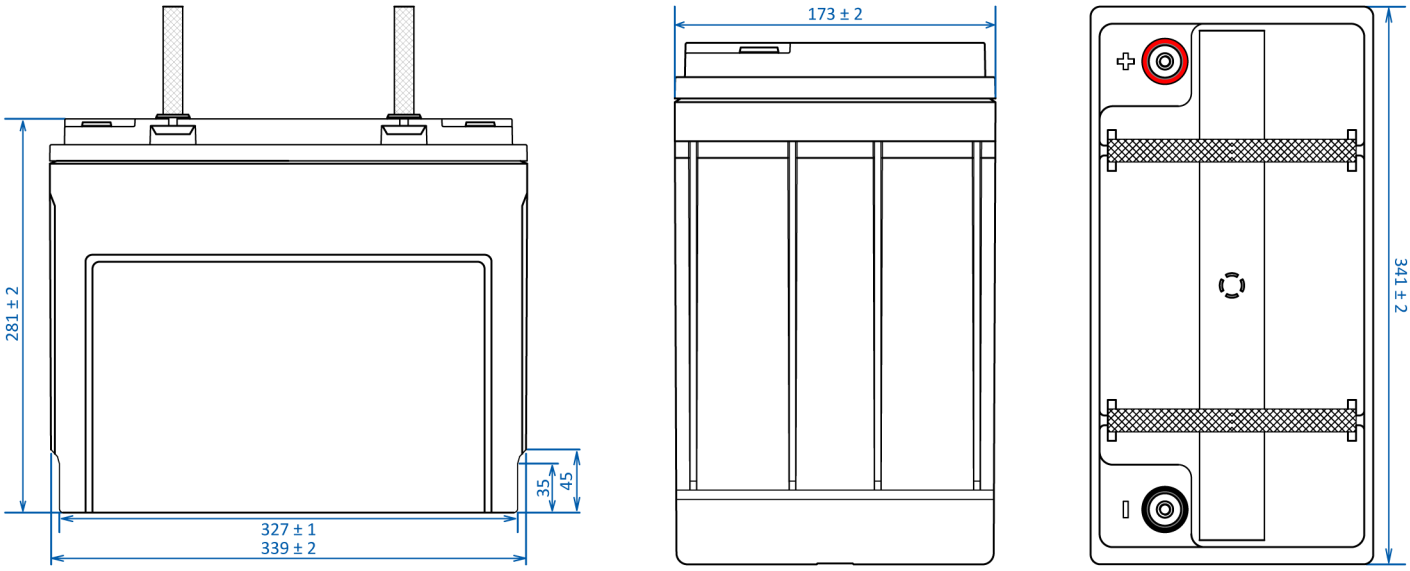

Discharge, Amps @ 25°C (77°F)											
End vpc	1.5h	2h	3h	4h	5h	6h	7h	8h	10h	20h	24h
1.85vpc	69.0	54.5	38.8	30.6	25.3	21.8	19.2	17.2	14.2	7.56	6.41
1.80vpc	71.8	57.5	41.4	32.4	26.7	22.8	19.4	17.3	14.4	7.80	6.61
1.75vpc	74.3	59.0	42.2	32.9	27.1	23.1	19.7	17.5	14.6	7.90	6.69
1.70vpc	76.3	60.2	42.8	33.2	27.3	23.3	19.8	17.7	14.7	7.96	6.75

Discharge, Watts @ 25°C (77°F)											
End vpc	1.5h	2h	3h	4h	5h	6h	7h	8h	10h	20h	24h
1.85vpc	823	653	468	369	306	263	231	207	172	91.5	77.6
1.80vpc	879	705	494	383	315	269	228	204	170	91.7	77.7
1.75vpc	902	709	499	387	318	271	230	206	171	92.7	78.6
1.70vpc	919	717	504	390	321	274	233	208	173	93.6	79.3

Order Number:	Description
T63-0001-00	Quantity 1, PYL12V140TT
T63-0001-04	Quantity 4, PYL12V140TT w/hardware

Distributed By:

WARNING: Cancer and Reproductive Harm. Wash hands after handling. www.P65Warnings.ca.gov

GS YUASA
Creating the Future of Energy

(800) 472-2879
www.gsyuasa-es.com
sales@gsyuasa-es.com

GS Yuasa Energy Solutions, Inc
1150 Northmeadow Pkwy, Suite 110
Roswell, GA 30076

MKT-125 PYL12V140TT Spec Sheet ver. 1.0 08-2025