JunctionBox (118×59) user manual

Updated July 4, 2025

JunctionBox (118×59) is a mounting box designed to install **Ajax cameras**.

The complete set provides all fastenings for installation. The mounting box is waterproof and has a cable gland, allowing for indoor and outdoor installation.

Buy JunctionBox (118×59)

Functional elements

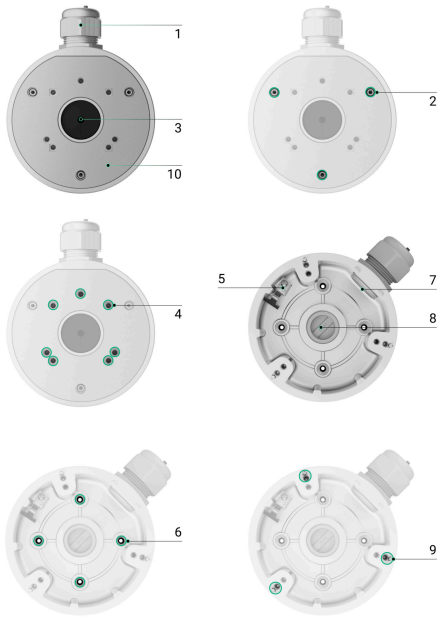

1. PG21 cable gland.
2. Holes to attach the mounting box lid to the mounting box casing.
3. Cable gland plug. Remove the plug to run the wires.
4. Holes to attach the camera to the mounting box lid.
5. Grounding terminal.
6. Holes to attach JunctionBox to the surface.
7. Hole to run the wires. Close it with a plug if you are routing the wires differently.
8. Cable gland plug. Remove the plug to run the wires.
9. Holes to attach the camera (DomeCam Mini) to the mounting box casing.
10. The JunctionBox lid.

Compatible devices

You can install one of such cameras in **JunctionBox (118×59)**:

- BulletCam;

- DomeCam Mini;
- TurretCam.

> JunctionBox (118×59) is sold separately from Ajax cameras.

Key features

JunctionBox (118×59) is a waterproof mounting box for the Ajax IP cameras' cable management. It provides convenient installation of devices on concrete walls, ceilings, or columns outdoors and indoors.

The mounting box has the PG21 cable gland to protect the cable from damage, loss of insulation, and excessive bending during installation and operation. The sealing ring for one or two cables into the cable gland prevents water, dust, and other contaminants from entering the camera mounting box.

JunctionBox is equipped with a mounting wire to secure the lid during installation. It prevents the lid from falling off the camera mounting box until it is

secured with screws. The mounting wire is connected to the grounding terminal.

> Grounding is carried out by a specialist in compliance with local electrical safety rules and regulations.

Selecting the installation site

The JunctionBox installation site must comply with the recommendations for mounting the devices installed using the box.

Follow these recommendations when designing the Ajax system project for an object.

JunctionBox cannot be installed

1. Indoors or outdoors where the temperature and humidity levels do not align with the specified **operating parameters**. This can damage the mounting box.
2. In locations where the conditions do not meet the requirements for a device installed using the mounting box.

Preparing to install

Cable arrangement

When preparing for cable routing, check the electrical and fire safety regulations in your region. Strictly follow these standards and regulations. Tips for cable arrangement are available in **this article**.

Cable routing

We recommend you read the **Selecting the installation site** section carefully before installation. Avoid deviations from the system project. Violating the basic installation rules and the recommendations of this manual may lead to incorrect operation and loss of connection with devices installed with JunctionBox.

Learn more

Preparing for connection

If you need to route cables through the cable gland, screw it in the required hole. Close the other hole using the cable gland plug.

To run cables through the cable gland:

1. Disassemble the cable gland.

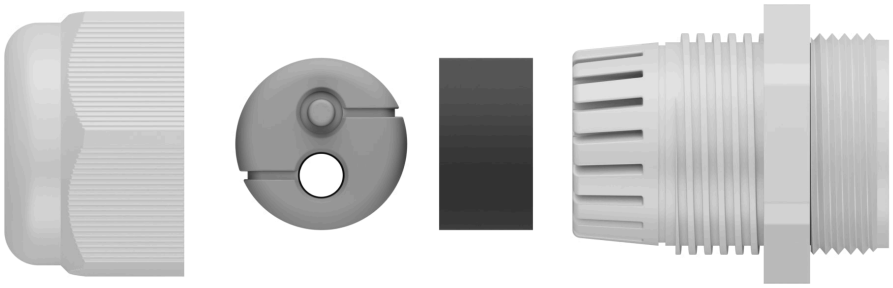

2. Cut the **grey** rubber sealing ring across the cut lines, considering the number of cables. The **black** rubber ring must stay intact.
3. Run one or two cables through the grey rubber sealing ring. Put on the black rubber ring.
4. Assemble the cable gland. Screw the cable gland into the required hole.

Installation

Before installation, ensure that you have selected the optimal location for the mounting box and that it complies with the requirements of this manual.

How to install JunctionBox

1. Prepare the hole in the bottom or side of the mounting box in advance: remove the cable gland plug and close the other hole.
2. Using the installation template, mark the locations for the drill holes on the surface where you plan to install JunctionBox. Match the template with the cable input point if necessary. Secure the template to the chosen installation location and drill four holes as indicated on the template.
3. Insert the pipe or corrugated pipe (up to Ø 16 mm) into the hole in the mounting box if necessary.
4. Run one or two cables into the mounting box casing through the hole in the bottom if necessary.
5. Secure JunctionBox on the vertical or horizontal surface at the selected installation site with the bundled screws using all fixation points.

6. Screw the cable gland into the required hole in the side of the mounting box if necessary.
7. Route the camera cables through the cable gland plug on the JunctionBox lid.

8. Connect the Ethernet cable to the camera. If it is powered by PoE, no external power supply is needed; otherwise, connect both the external power supply and the Ethernet cable.

9. Route the cables inside the camera mounting box.

10. Place the lid on the casing and fasten it with the bundled screws using the bundled hexagon key (Ø 3 mm). The installation method **depends** on the camera configuration.

11. Install the camera on the JunctionBox lid.

12. Check the tightness of JunctionBox.

How to install the camera in JunctionBox

BulletCam

To install BulletCam in JunctionBox:

1. Loosen the screw on the BulletCam swivel mounting bracket with the bundled hexagon key (Ø 2 mm) and rotate the bracket if you need to change the cable channel position. Tighten the screw back.

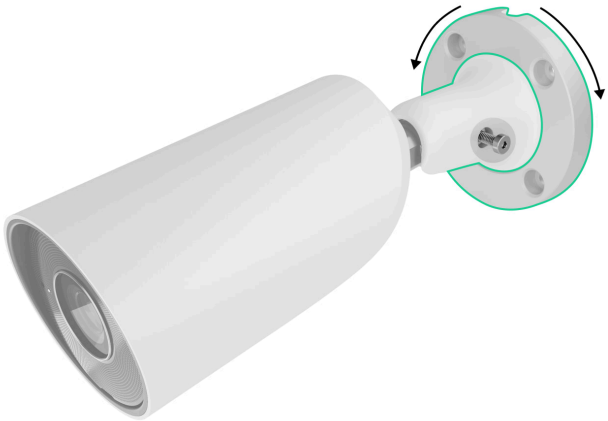

2. Route the cable through the cable gland plug on the JunctionBox lid and secure the swivel mounting bracket to the surface using the bundled **M4×12** screws.

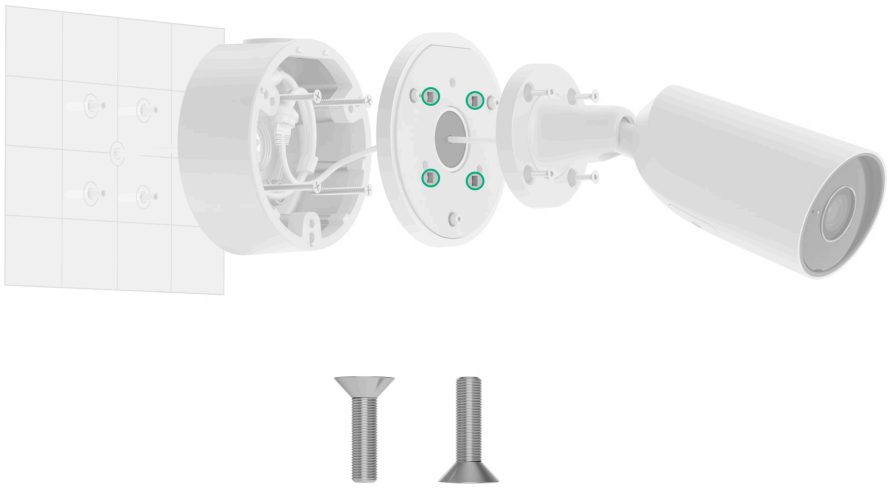

Learn more about the BulletCam installation

DomeCam Mini

To install DomeCam Mini in JunctionBox:

1. Remove the faceted lens.
2. Using the bundled hexagon key (Ø 2.5 mm), remove the screws holding the protective cover.
3. Adjust the camera position by the enclosure's rotation. Tighten the two screws holding the camera lens enclosure. Replace the protective cover and tighten the screws.
4. Route the cable into JunctionBox and secure the camera to the mounting box using the bundled **M4×20** screws. DomeCam Mini is installed without the lid.

5. Secure the faceted lens.

Learn more about the DomeCam Mini installation

TurretCam

To install TurretCam in JunctionBox:

1. Using the bundled hexagon key (Ø 2 mm), loosen the two screws and detach the camera enclosure from the holder. Be sure to support the enclosure to prevent the camera from falling.
2. Route the cable through the camera holder and secure the holder to the JunctionBox lid using the bundled **M4×12** screws.

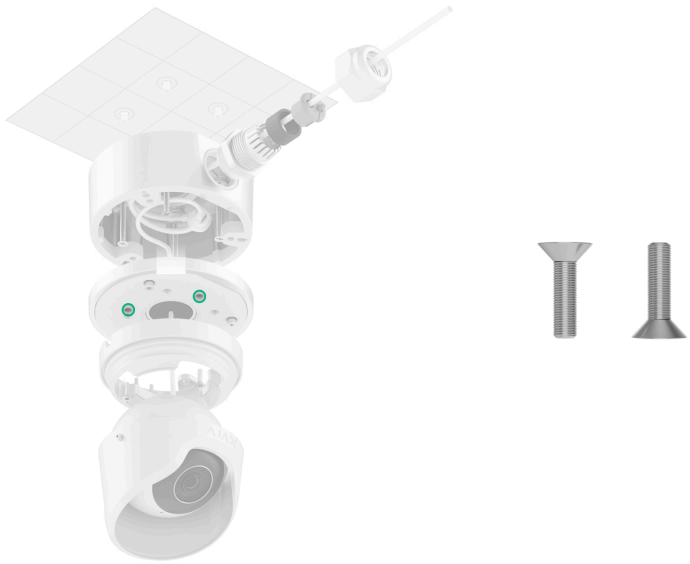

3. Place the camera enclosure in the holder, ensuring that the camera lens faces the protected area. Secure it in place by tightening the two screws in the holder using the bundled hexagon key (Ø 2 mm).

Learn more about the TurretCam installation

Maintenance

JunctionBox does not require maintenance.

Technical specifications

All technical specifications

Compliance with standards

Warranty

Warranty for products of Limited Liability Company “Ajax Systems Manufacturing” is valid for 2 years after purchase.

If the device does not function correctly, please contact Ajax Technical Support first. In most cases, technical issues can be resolved remotely.

Warranty obligations

User Agreement

Contact Technical Support:

- e-mail
- Telegram