BulletCam user manual

Updated April 1, 2026

BulletCam is an IP camera with a smart infrared (IR) backlight and an object recognition function. The user can view archived and live videos in Ajax apps. To store the captured data, install a microSD card or connect the camera to **NVR** with an installed hard disk.

The camera is connected to the network via Ethernet, using the appropriate connector.

The camera is available in several versions:

- BulletCam (5 Mp/2.8 mm);
- BulletCam (5 Mp/4 mm);
- BulletCam (8 Mp/2.8 mm);
- BulletCam (8 Mp/4 mm).

Buy BulletCam

Camera versions with other enclosures are also available. All Ajax cameras are available here.

Functional elements

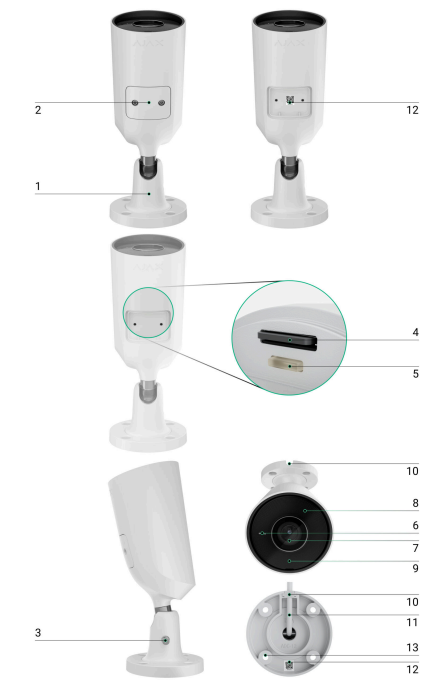

1. Swivel mounting bracket.

2. Protective cover.

3. Screw for fixing camera position.

4. Slot for microSD card.

5. Reset button.

6. Microphone.

7. Camera lens.

8. Faceted lens. Covers the infrared LEDs and diffuses the rays.

9. IR backlight. Used to record videos in dark and low-light conditions.
10. Cable channel for routing the cable connector from the camera.
11. Cable connector.
12. QR code with the device ID. Used to add BulletCam to an Ajax system.
13. Holes for attaching the camera to the surface.

Operating principle

BulletCam is an IP camera that uses artificial intelligence (AI) for object recognition. Its algorithms can identify moving objects, distinguishing between humans, animals, or vehicles.

The device features a smart IR backlight, ensuring the capture of high-quality images even in low-light conditions. The camera automatically adjusts the backlight intensity in real time to prevent overexposure, enabling clear visibility of objects that are either far away or too close to the camera in low-light conditions.

> BulletCam has an IP65 protection class, making it suitable for outdoor installation. Its robust metal enclosure protects the device against sabotage.

You can install a microSD card with a memory capacity from 32 GB to 256 GB (not included in the complete set of the camera). The memory card should be V30 or faster. Additionally, the device can operate without a memory card or via NVR.

> Using the video storage calculator, you can calculate the NVR or camera required storage capacity and estimated recording time based on the video stream settings.

BulletCam enables you to:

1. Watch the video in real-time with the ability to zoom in for a closer look.
2. Access archived videos, navigating through them based on recording chronology and calendar (this feature is available if a microSD memory card is installed in the camera, or it is connected to NVR with an installed hard disk).
3. Configure motion detection zones and the adjust sensitivity level.
4. View the **Video wall** that combines images from all connected cameras.
5. Quickly access **automation devices** control from the cameras' video player menu.
6. **Create video scenarios** that send a short video from the selected camera to the Ajax app when the security detector is triggered.
7. Download the required segments of video recordings from the archive to smartphones or PCs (this feature is available if a microSD memory card is installed in the camera, or it is connected to NVR with an installed hard disk).

> The video recording segments downloaded from BulletCam with **firmware 2.309** and later have the **Ajax digital signature** that verifies the integrity of the exported video. To verify the authenticity of the downloaded video recordings, use the **Ajax media player** software.
>
> Learn more about Ajax media player

How to download videos from the archive in Ajax apps

How to configure temporary camera video access

8. Configure connection via ONVIF to integrate the device with video management systems (VMS) such as Milestone, Genetec, Axxon, and Digifort.

ONVIF authorization is supported by BulletCam with a firmware version 2.356 or later.

An admin or PRO with rights to configure the system can set up a connection via ONVIF in:

- Ajax Security System with the app version 3.25 or later.
- Ajax PRO: Tool for Engineers with the app version 2.25 or later.
- Ajax PRO Desktop with the app version 4.20 or later.
- Ajax Desktop with the app version 4.21 or later.

How to configure ONVIF authorization

Video scenarios

The Ajax system offers the capability to use IP cameras for alarm verification. Video scenarios enable the substantiation of alarm triggers with the corresponding video from cameras installed at the facility.

Cameras can be configured to respond to alarms from a single device, multiple devices, or all connected devices. Combined detectors can register various types of alarms, allowing you to configure responses to a wide range of alarm types, whether it's just one, several, or all of them.

Learn more

You can also configure the **sirens** to activate when motion or a specific AI-recognised object is detected. When video devices detect motion or a specific AI-recognised object, the system automatically activates sirens added to the hub to sound an alarm.

Learn more

Video wall

The user can manage videos on the **Video wall** tab, accessible once at least one camera has been added. This feature ensures quick access to all connected cameras, displayed in accordance with privacy settings.

In mobile Ajax apps, you can:

1. Switch between cameras.
2. Search for the desired camera by name.
3. Manage a PTZ camera.

In Ajax PRO Desktop, you can:

1. Switch between cameras.
2. Search for the desired camera by name.
3. Organize cameras by room, NVR, or group.
4. Manage a PTZ camera.
5. Save customized layouts for displaying video from cameras.
6. Change the order in which the camera video is displayed.
7. **Create templates for displaying videos in a slide show**.

How to use the video wall widget in Ajax PRO Desktop

What keyboard shortcuts are available in Ajax PRO Desktop

Privacy zones

The system allows hiding parts of the frame. For instance, if a safe is in view, activity around it can be recorded without revealing its contents by setting up the right zone. No motion or object will be detected and recorded in the privacy zone.

To do this, in Ajax apps:

1. Go to the **Devices** tab.
2. Select the camera from the list. If it is connected to the network video recorder, select **NVR** and tap on **Cameras**.
3. Go to **Settings** by tapping on the gear icon twice.
4. Select the **Privacy zones** menu.
5. Go to the **Configure privacy zones** menu. Select the required area.

0:00 / 0:09

6. Tap on the icon. Return to the camera settings.

The user can create up to four private zones.

Firmware update

If a new firmware version for BulletCam is available, the icon appears in Ajax apps in the **Devices** tab. An admin or a PRO with access to the system settings can launch an update via device **states** or **settings**. The on-screen instructions help to update the firmware successfully.

Selecting the installation site

When choosing the optimal location to install BulletCam, consider the camera's viewing angle and any potential obstacles that might obstruct its view.

How to install an Ajax camera for better AI recognition

Consider the placement recommendations when designing the security system project for your object. The security system should be designed and installed by professionals. A list of recommended partners is **available here**.

The camera should not be installed

1. Indoors or outdoors where the temperature and humidity levels do not align with the specified **operating parameters**.
2. In locations where objects or structures might obstruct the camera's view.
3. In direct bright light or on bright objects (e.g., a white wall), as it can reduce the image quality. The bright surface reflects the IR backlight and blinds the camera in the dark.

Installation

1. Connect the Ethernet cable to the camera. If it is powered by PoE, no external power supply is needed; otherwise, connect both the external power supply and the Ethernet cable.
2. Turn on the power supply of the camera. The LED indicator on the cable connector lights up green.
3. **Add the camera to the system**, and disconnect the Ethernet and power supply from the camera.
4. Using the bundled hexagon key (Ø 2 mm), remove the screws holding the protective cover. Insert a microSD card (not included) into the appropriate slot. Replace the protective cover and tighten the screws.

After adding BulletCam to the system, format the memory card in the camera settings.

5. Using the installation template, mark the locations for the drill holes on the surface where you plan to mount the camera. Secure the template to the chosen installation location with tape, and drill four holes as indicated on the template.

6. Loosen the screw on the swivel mounting bracket with the bundled hexagon key (Ø 2 mm) and rotate the bracket if you need to change the cable channel position. Tighten the screw back.

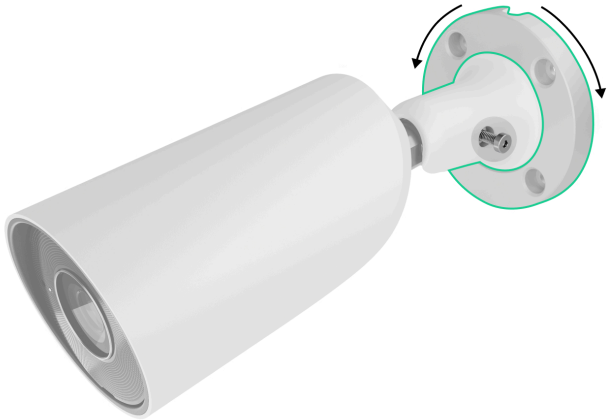

7. Route the cable through the cable channel and secure the swivel mounting bracket to the surface using the bundled screws.

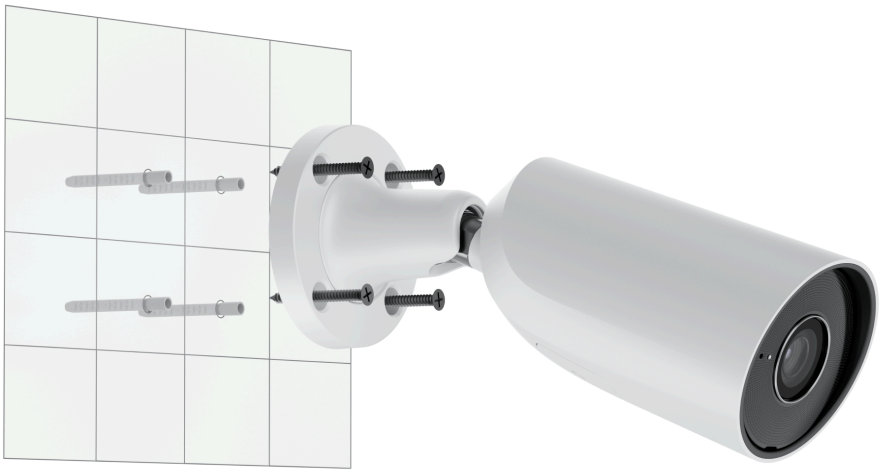

8. Loosen the screw on the swivel mounting bracket to adjust the camera tilt and rotation position.

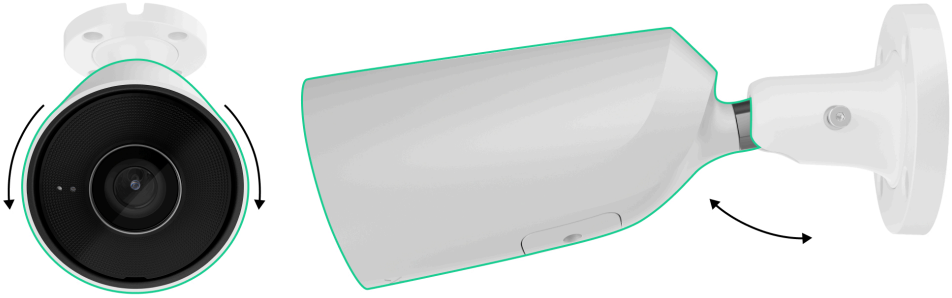

9. Ensure that the camera lens faces the protected area. Secure it by tightening the screw in the swivel mounting bracket.

10. Connect the Ethernet and power supply to the camera. Install a waterproof connector if the camera is used indoors with humidity levels outside the **operating parameters**, or outdoors.

> The recommended electrical parameters for the power supply are 12 V⎓ ± 20% with a current of at least 1 A.

11. Turn on the power supply of the camera. The LED indicator on the cable connector lights up green.

Adding to the system

Before adding a device

1. Install an **Ajax app**.
2. Log in to your **account** or create a new one.
3. Select a **space** or create a new one.
4. Add at least one **virtual room**.

5. Ensure the space is disarmed.

> Only a PRO or a space admin with the rights to configure the system can add the device to the space.

Types of accounts and their rights

How to add BulletCam

Without NVR in the system:

With NVR in the system:

Resetting to the default settings

To reset the camera to the default settings:

1. Turn off the camera by disconnecting the external power supply or Ethernet cable (if it is powered by PoE).
2. Press and hold the reset button.
3. Power the camera while the reset button is pressed, and wait until the button's LED indicator lights up violet. This will take about 50 seconds.

> The button's LED indicator lights up blue for 20 seconds after powering the camera with a pressed reset button. Then it turns off for 30 seconds and lights up violet. This means that the camera has been restored to the default settings.

4. Release the button.

Icons

The icons in the app display some device states. To access them:

1. Select a **space** in the Ajax app.
2. Go to the **Devices** tab.
3. Find **BulletCam** in the list.

Icon	Value
	The extra services are activated according to the subscription. Learn more
	The device operates in **Night mode**. Learn more
	The microSD card is not installed.
	The microSD card is installed.
	Malfunction of the microSD card is detected. Formatting the microSD card is recommended.
	The microSD card is being formatted.
	The new firmware version is available.
Updating	Firmware update is in progress: downloading/installing the latest version.
	An error was detected during the firmware update.
Offline	The device has lost connection with the Ajax Cloud server.
ONVIF	The device connection via ONVIF is enabled. Learn more
	There is no access to view the device's video.

States

The states display information about the device and its operating parameters. You can find out about the states of the camera in Ajax apps:

1. Select a **space** in the Ajax app.
2. Go to the **Devices** tab.
3. Select **BulletCam** from the list of devices. If BulletCam is connected to the video recorder, select **NVR** and then tap **Cameras**.

Parameter	Meaning
Extra services	The field is available in **Ajax PRO apps** and displayed when extra services are available or activated for the device according to the subscription. Tapping on the field shows the information about assigned services and contacts of the company providing these services. **Learn more**
Malfunction	Tapping on (i) opens the list of device malfunctions. The field is displayed only if a malfunction is detected.
Firmware update	The field is displayed when the firmware update is available: • **New firmware version available** — the new firmware is available for download and installation. • **Downloading...** — firmware downloading is in progress. It is displayed as a percentage.

	• **Installing…** — the firmware is being installed. • **Failed to update firmware** — the new firmware could not be installed. Tapping on ⓘ opens more information about the device's firmware update.
Connection	The camera connection status to the internet via Ethernet: • **Online** — the camera is connected to the network. Normal state. • **Offline** — the camera is not connected to the network. Please check your wired internet connection. Tapping the icon ⓘ displays the network parameters.
Connection to NVR	Displayed when the camera is connected to NVR. The camera connection status to NVR: • **Online** — the camera is connected to the network via NVR. Normal state. • **Offline** — the camera is not connected to the network via NVR. Please check your wired internet connection. Tapping the icon ⓘ displays the network parameters.
Storage location	Displays the list of storage devices connected to the camera: • **Memory card** — data is recorded on a memory card (not included) installed in the camera.

	• **NVR hard drive** — data is recorded on the NVR hard disk. Tapping the icon ⓘ displays the recording mode and storage settings.
Memory card	The memory card connection status to the camera: • **OK** — the memory card is communicating with the camera. Normal state. • **Error** — there is an error in the memory card operation. Check details by tapping the ⓘ icon. Follow the instructions provided in the app. • **Not installed** — the memory card is not installed in the camera. • **Requires formatting** — the memory card formatting is recommended. If the memory card contains data, it will be permanently deleted. • **Works with errors** — the memory card has issues. Press the reset camera button or format the memory card. • **Formatting…** — the memory card is being formatted.
Resolution	The current camera resolution.
Frame rate	The current camera frame rate.
Bit rate	The current camera bit rate.
Video codec	The current video codec: • **H.265** • **H.264**
Motion detection	The **Motion detection** function status:

	• **On** • **Off**
Object detection	The **Object detection** function settings: • **Human** • **Pet** • **Vehicle** • **Off**
Uptime	The camera's operating time since the last reboot.
ONVIF integration	Shows the current status of the device's ONVIF integration. This state is displayed only when ONVIF integration is enabled.
Permissions to view (in progress)	Displays the number of users who have access to view video from the camera. Tapping the icon ⓘ displays the list of users, installers, and companies with access under certain conditions. Learn more
Alarm response	
Operating mode	Shows how the device reacts to alarms: • **Independent alarm** — the device reacts to a threat according to its settings and doesn't trigger other devices. • **Instant alarm** — the armed device immediately reacts to a threat and raises the alarm.

	• **Entry/Exit** — when a delay is set, the armed device starts the countdown and doesn't raise the alarm even if triggered until the countdown ends. • **Follower** — the device inherits the delays from **Entry/Exit** devices. However, when the **Follower** is triggered individually, it immediately raises the alarm.
Delay when entering	Delay when entering (alarm activation delay) is the time the user has to disarm the security system after entering the premises. Learn more
Delay when leaving	Delay when leaving (arming delay) is the time the user has to leave the premises after arming. Learn more
Arm in Night mode	When this option is enabled, the device will enter the armed mode when the system is set to **Night mode**. Learn more
Night mode delay when entering	Entry delay time in **Night mode**. Delay when entering (alarm activation delay) is the time the user has to disarm the security system after entering the premises. Learn more
Night mode delay when leaving	Exit delay time in **Night mode**. Delay when leaving (arming delay) is the time the user has to leave the premises after arming. Learn more
Firmware	Firmware version of the camera.

ID	BulletCam ID/Serial Number. Also available on the QR code on the camera enclosure and its package box.

Settings

To change camera settings, in an Ajax app:

1. Go to the **Devices** tab.
2. Select **BulletCam** from the list. If BulletCam is connected to the video recorder, select **NVR** and tap **Cameras**.
3. Go to **Settings** by tapping on the gear icon.
4. Set the required parameters.
5. Tap **Back** to save the new settings.

An Ajax system enables PROs to apply multiple preconfigured settings to multiple video devices simultaneously via setting templates.

Learn more about settings templates

Settings	Value
Name	Camera name. Displayed in the list of devices, SMS text, and notifications in the events feed. To change the camera name, tap on the text field. The name can contain up to 12 Cyrillic characters or up to 24 Latin characters.
Room	Selection of the camera virtual room.

	The room name is displayed in SMS text and notifications in the events feed.
Recording preferences	Selection of the **Recording mode** for each storage device: • **On detection or scenario** • **Continuous** • **Never** Selection of the armed mode when the camera records video: • **When armed** • **Always**
Notifications from camera detectors	Opens a menu with **Notifications from camera detectors** settings. Learn more
Detection	Opens a menu with **Detection** settings. Learn more
Video stream	Settings for mainstream and substream parameters. Learn more
Image	Settings for camera image quality. Learn more
Audio	Settings for audio capture and playback. • **Audio capture and playback** — turn on to watch and record videos with audio.

	• **Audio codec**. • **Bit rate**. • **Sample rate**. • **Microphone gain** — configure the microphone sensitivity level based on the installation location.
Privacy zones	Allows the user to select zones that are not displayed on the camera video. Instead, the user sees a black rectangle. Learn more
Alarm response	Opens a menu with **Alarm response** settings. Learn more
Firmware update	Allows the user to check for a new firmware version and download it.
Connection	The setting for selecting the camera's connection type to Ajax Cloud service via Ethernet. Available connection types: • **DHCP** • **Static**
Memory card	Selection of the maximum archive depth. It can be set in the range of 1 to 360 days or can be unlimited. Allows the user to format the memory card.

Monitoring	The setting is available in Ajax Pro apps. Allows a PRO with rights to configure the system to set up: • **Zone number for CMS events** — unique identifier of the device in events it reports to CMS. • **Send events on detections to CMS** — whether the device will send notifications on motion or object detection to CMS.
Service	Opens a menu with **Service** settings. Learn more
Report a problem	Allows the user to describe a problem and send a report.
User manual	Opens the camera user manual.
Unpair from NVR	Unpairs the device from the NVR to which it was paired. The option is available if the device is paired with the NVR.
Delete device	Erases all device settings and deletes the device from the space. Also, it unpairs the device from the NVR if such connection is set up.

Notifications from camera detectors

Settings	Meaning
Notify if detected	The user can select the type of object or motion, and when it's recognized, a notification is received and sirens are activated: • **Human** • **Pet** • **Vehicle** • **Any motion (by frame analysis)** You can configure each event type with one of the following alert options: **Regular notification** or **Alarm**. The selected option determines the event color in the notifications feed and the alert type on the phone. Note that the corresponding types of object or motion should be enabled in the **Detection** settings. To specify whether motion detection should activate the sirens, tap on the required type of object or motion and enable the **Activate sirens upon detection** option. The feature is available when the camera and at least one siren are added to an Ajax hub with OS Malevich 2.31 and later versions. Note that the camera and the hub must be online at the moment of motion detection so the system can activate the sirens. Learn more

When to notify	Selection of the mode when the camera sends notifications: • **When camera armed** • **Always**
Interval in reporting similar events	Selecting the time interval in reporting similar events: from **30 seconds** to **8 hours**. The default interval is **3 minutes**. Selected time applies for each detection type separately and helps to avoid repeated informing of the same triggering reason.
Duration of object detection for notification	Selecting how long an object should remain in the camera's field of view so the system sends a notification about the detected object. The available values are **Notify instantly** or **2**, **3**, **4**, or **5 seconds**. The default time is **2 seconds**.

Detection settings

Settings	Meaning
Motion detection	When the option is enabled, the camera detects motion using its built-in software.
Analyze image	The software algorithm of image analysis that is used for motion detection. The option is available when **Motion detection** is enabled.
Motion detection settings	Opens a menu with motion detection settings:

	• **Adjust activity zone** — defines the specific area within the field of view where the camera should detect motion. • **Sensitivity threshold** — defines the device's sensitivity to the motion in the activity zone. • **Area occupied by detectable objects** — specifies the size of the area in the camera's field of view that a moving object should occupy for the device to be triggered. The option is available when **Motion detection** is enabled.
Object detection	When the option is enabled, the camera identifies the type of moving objects using a built-in algorithm. In the video, people, pets, and vehicles are highlighted with colored rectangles.
Object detection settings	Opens the menu with object detection settings: • **Adjust object detection zone** — defines the specific area within the field of view where the camera should identify the type of moving objects. • **Human detection** — enables detection of people in the video. • **Pet detection** — enables detection of pets in the video. • **Vehicle detection** — enables detection of vehicles in the video. • **Sensitivity threshold** — defines the accuracy of the object recognition. The setting is available for each object type. The option is available when **Object detection** is enabled.

Video stream settings

Settings for mainstream and substream parameters.

Settings	Value
Mainstream	
Video codec	Selecting the video compression standard: • H.264 • H.265
Resolution	Selecting the mainstream resolution: • 1024 × 576 • 1920 × 1080 • 2304 × 1296 • 2560 × 1440 • 2592 × 1944 • 2880 × 1620 • 2944 × 1656 • 3072 × 1728 • 3840 × 2160
Frame rate	Selecting the frame rate: from 3 to 25 with an increment of 1 frame/s.

Bit rate type	Selecting the bit rate type: • **Variable (VBR)** • **Constant (CBR)**
Bit rate	Setting the bit rate in kbit/s.
GOP length	Selecting the GOP length: from 1 to 250 with an increment of 1 frame.
VBR quality/CBR quality	Selecting the compression quality: from 0 to 100 with an increment of 1.
Substream	
Video codec	Selecting the video compression standard: • H.264 • H.265
Resolution	Selecting the substream resolution: • 720 × 480 • 720 × 576 • 1024 × 576
Frame rate	Selecting the frame rate: from 3 to 25 with an increment of 1 frame/s.
Bit rate type	Selecting the bit rate type: • **Variable (VBR)** • **Constant (CBR)**
Bit rate	Setting the bit rate in kbit/s.
GOP length	Selecting the GOP length: from 1 to 250 with an increment of 1 frame.

VBR quality / CBR quality	Selecting the compression quality: from 0 to 100 with an increment of 1.

Image settings

Settings for camera image quality.

Settings	Value
Image settings	Selecting image settings mode: • **General** — applies a single set of image parameters to all lighting conditions. • **Scene-specific** — allows configuration of image parameters separately for specific lighting conditions. Learn more
Capturing mode	Selecting specific settings for each scene and video capturing conditions: • **Day** • **Night (IR light)** You can configure the image brightness, color saturation, sharpness, and contrast for each video capturing condition. For the **Scene-specific** image settings only.
Vivid mode: Color intensity style	Turning display settings for a warmer, brighter, and richer image beyond the natural tone.
Brightness	Adjusting the image brightness.
Color saturation	Adjusting the image color saturation.

Sharpness	Adjusting the image sharpness.
Contrast	Adjusting the image contrast.
Wide dynamic range (WDR)	Enabling or disabling the WDR. When WDR is enabled, it helps to enhance the camera images, with too dark or bright areas.
Lighting stabilization	Adjusting the exposure: • **1–2.9** — adjusting WDR levels. • **3–5** — activating and adjusting HDR levels. This setting is available if **Wide dynamic range (WDR)** is enabled.
Day/Night mode	Selecting the camera vision mode depending on the light conditions: • **Day** — IR backlight is always off. • **Night** — IR backlight is always on. • **Auto** — IR backlight automatically switches according to the **Mode switching conditions** settings.
Mode switching conditions	Selecting the lighting threshold for switching between the day and night mode: • **Later to Night / Earlier to Day.** • **Medium.** • **Earlier to Night / Later to Day.** This setting is available if **Day/Night mode** is set to **Auto**.
Scene illumination	Selecting the scene illumination mode:

	• **Disabled** — the camera does not use any built-in illumination. The mode is suitable for well-lit areas or when external lighting is used. • **Infrared light** — the camera uses IR illumination to capture black-and-white images in low-light conditions. IR light is invisible to the human eye and does not attract attention.
Infrared illumination (IR) mode	Adjusting the intensity of the IR backlight: • **Auto** • **Custom** The setting is used to capture clear black-and-white images at night or in low light and ensures visibility using IR LEDs when conventional lighting is ineffective. This setting is available if **Scene illumination** is set to **Infrared light**.
IR intensity	Adjusting the IR backlight intensity. This setting is available if **Infrared illumination (IR) mode** is set to **Custom**.
Image rotation	Selecting whether to rotate the image: • **Default view** — the image is not rotated. • **180°** — the image is rotated by 180°. This parameter is recommended for devices that have an inverted or upside-down image due to installation specifics.
Set exposure based on	Selecting the frame area on which the exposure is based on: • **Entire frame**

	• **Frame's center** • **Frame's top** • **Frame's right** • **Frame's bottom** • **Frame's left**
Exposure mode	Selecting the exposure mode: • **Auto** • **Manual setup**
Image preferences	Adjusting the shutter speed for less motion blur or for less noise in the image. This setting is available if **Exposure mode** is set to **Auto**.
Shutter speed	Selecting the shutter speed to ensure correct exposure for the image. This setting is available if **Exposure mode** is set to **Manual setup**.
Exposure compensation	Ability to override automatic exposure settings to manually control the image brightness.
Noise reduction	Enabling or disabling the noise reduction.
Parameter value	Adjusting the noise reduction level. This setting is available if **Noise reduction** is enabled.
Anti-flicker (Power frequency)	Selecting the power grid frequency to reduce the image flickering. This setting is used if the camera is capturing the video in low-light conditions and lamps are flickering on the camera image with the power grid frequency. Available parameters:

	• **50 Hz** • **60 Hz** • **Disabled** — anti-flicker is off.

Alarm response settings

Settings	Meaning
Operating mode	Specify how this device will react to alarms: • **Independent alarm** — the device reacts to a threat according to its settings and doesn't trigger other devices. • **Instant alarm** — the armed device immediately reacts to a threat and raises the alarm. • **Entry/Exit** — when a delay is set, the armed device starts the countdown and doesn't raise the alarm even if triggered until the countdown ends. • **Follower** — the device inherits the delays from **Entry/Exit** devices. However, when the **Follower** is triggered individually, it immediately raises the alarm.
Delay when entering	Selecting delay time when entering: 5 to 255 s. Delay when entering (alarm activation delay) is the time the user has to disarm the security system after entering the premises. Learn more

Delay when leaving	Selecting delay time when leaving: 5 to 255 s. Delay when leaving (arming delay) is the time the user has to leave the premises after arming. Learn more
Arm in Night mode	When enabled, the device switches to the armed mode when the system is set to **Night mode**. Learn more
Night mode delay when entering	Delay time when entering in **Night mode**. Delay when entering (alarm activation delay) is the time the user has to disarm the security system after entering the premises. Learn more
Night mode delay when leaving	Delay time when leaving in **Night mode**. Delay when leaving (arming delay) is the time the user has to leave the premises after arming. Learn more
Night mode delay	Delay time in **Night mode**: 5 to 255 seconds. It is the time the user has to disable **Night mode** (alarm activation delay) after the Entry/Exit detector is triggered. The setting is displayed if the device is set to the **Follower** operating mode and the **Arm in Night mode** option is enabled. Learn more

Service settings

Settings	Meaning
Time zone	Time zone selection. Set by the user and is displayed when viewing video from IP cameras.
Connection via ONVIF	Configuring the device's connection via ONVIF to third-party VMSs. Learn more
Security certificates	Allows you to download built-in cloud certificates for secure HTTPS integration with third-party systems via ONVIF.
Server connection	
Delay of cloud connection loss alarm, sec	The delay helps to reduce the risk of a false event about the lost connection with the server. The delay can be set in the range of 30 to 600 seconds.
Cloud polling interval, sec	The frequency of polling the Ajax Cloud server is set in the range of 30 to 300 seconds. The shorter the interval, the faster the cloud connection loss will be detected.
Get notified of server connection loss without alarm	When the toggle is enabled, the system notifies users about server connection loss using a standard notification sound instead of a siren alert.

Indication

The green LED indicator is placed on the cable connector.

Event	Indication	Note
The camera has power.	Lights up green.	

Malfunction

When a BulletCam malfunction is detected, the Ajax app displays a malfunction counter on the device icon. All malfunctions are indicated in the camera **States**. Fields with malfunctions will be highlighted in red.

A malfunction is displayed if:

- The camera lost connection with the server.
- The camera memory storage device has a malfunction. Press the camera reset button or format the memory storage device in the camera settings.
- Memory storage device needs formatting. Format the memory storage device in the camera settings.

Maintenance

Regularly check the functioning of the camera. If you notice any image degradation, loss of clarity, or darkening, check the camera for dirt. Clean the device's enclosure to remove dust, cobwebs, and other contaminants as they emerge. Use soft, dry wipes suitable for cleaning electronic equipment.

Avoid using substances that contain alcohol, acetone, petrol, and other aggressive solvents when cleaning the camera. Wipe the lens gently: scratches can result in poor-quality images and camera failure.

Technical specifications

Technical specifications for BulletCam (5 Mp/2.8 mm)

Technical specifications for BulletCam (5 Mp/4 mm)

Technical specifications for BulletCam (8 Mp/2.8 mm)

Technical specifications for BulletCam (8 Mp/4 mm)

Compliance with standards

Warranty

Warranty for the Limited Liability Company “Ajax Systems Manufacturing” products is valid for 2 years after the date of purchase.

If you encounter any issues with the device’s functionality, we recommend contacting Ajax Technical Support first. In most cases, technical issues can be resolved remotely.

Warranty obligations

User Agreement

Contact Technical Support:

- e-mail
- Telegram

Manufactured by “AS Manufacturing” LLC