12V PSU for NVR user manual

Updated January 7, 2026

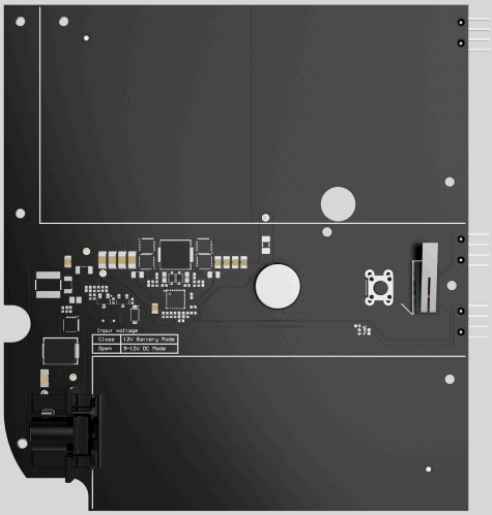

12V PSU for NVR is an alternative power supply unit that is used to connect an Ajax NVR video recorder to an 8–16 V⎓ power supply. 12V PSU for NVR is an electronic board that is installed into the video recorder enclosure, replacing the standard 110/230 V~ power supply unit.

Buy 12V PSU for NVR

Buy an NVR video recorder

Functional elements

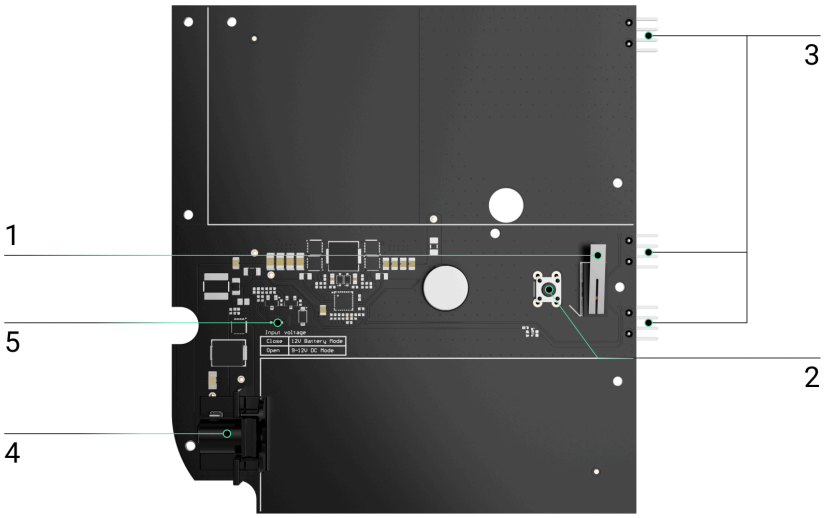

1. Tamper button. It is triggered when the enclosure lid of the NVR video recorder is removed.
2. Reset button.
3. Connectors for connecting the board of 12V PSU for NVR to the video recorder board.
4. Connector for installing a terminal adapter.
5. Jumper. Install or remove it, depending on the operating mode.

Installing the power supply unit

Security requirements

> Only qualified specialists should install 12V PSU for NVR.

When installing 12V PSU for NVR, follow the electrical safety rules for using electrical appliances and the requirements of electrical safety regulations. Before installing the power supply unit, ensure that the video recorder is

disconnected from the electrical network. When installing, do not allow moisture ingress on the boards of the video recorder and power supply units.

How to install 12V PSU for NVR

1. Remove the SmartBracket mounting panel from the video recorder by pulling down the back panel.
2. Switch off the power supply of the video recorder.

> ⚠ When replacing the hard drive, wait 10 seconds after disconnecting the device from the power source. The hard drive contains rapidly rotating platters. Sudden movements or impacts can disable the mechanism, resulting in damage to the drive and data loss.
>
> Do not move or turn the NVR while the hard drive is spinning.

3. Disconnect the external power and Ethernet cables.
4. Unscrew the bundled screw that secures the hard drive in the NVR enclosure. Lift the hard drive latch by pressing the button.

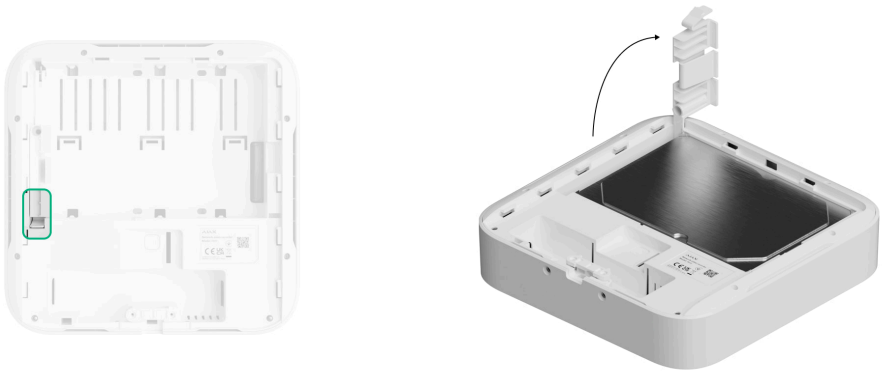

5. Remove the hard drive from the NVR enclosure.
6. Remove all screws of the back lid and take it off.

7. Slide the latches and carefully remove both boards, keeping them in the same plane and not disconnecting them. There are connectors between boards; do not break them.

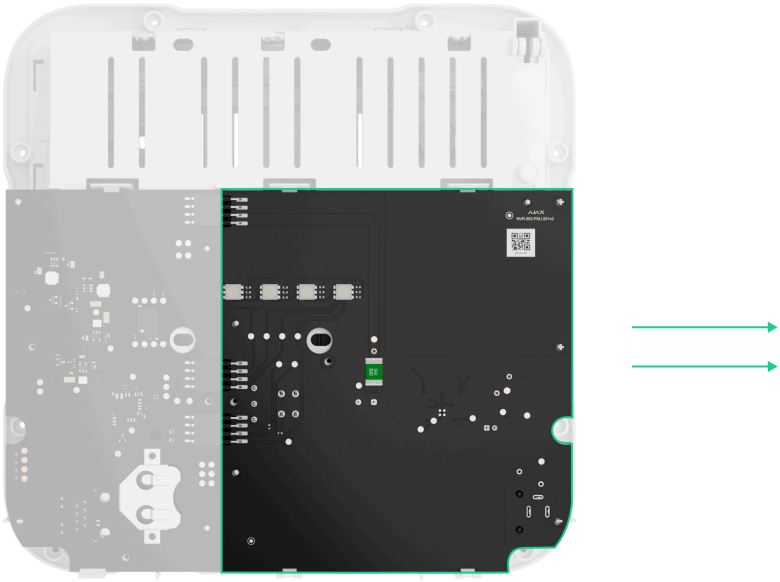

8. Disconnect the power supply unit (the larger board) from the main board.

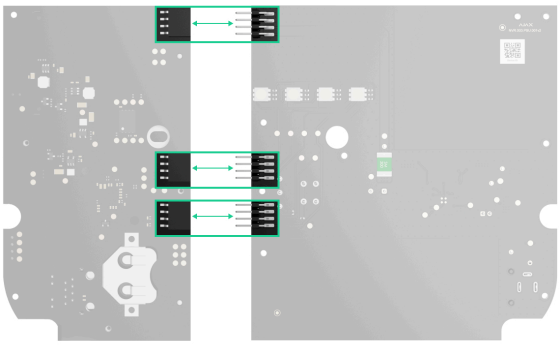

9. Install or remove the jumper, depending on the operating mode.

> 12V PSU for NVR provides two operating modes:
>
> - **8–16 V⎓** — the jumper **should not be installed**. In this mode, an Ajax video recorder operates in the voltage range of 8–16 V⎓.
> - **12.1–16 V⎓** — the jumper **must be installed**. In this mode, an Ajax video recorder operates on a voltage that exceeds 12 V⎓. To avoid full discharge of the power supply, the NVR switches off when the voltage drops below 10.35 V⎓.

10. Connect 12V PSU for NVR to the main board using three four-pin connectors between them.

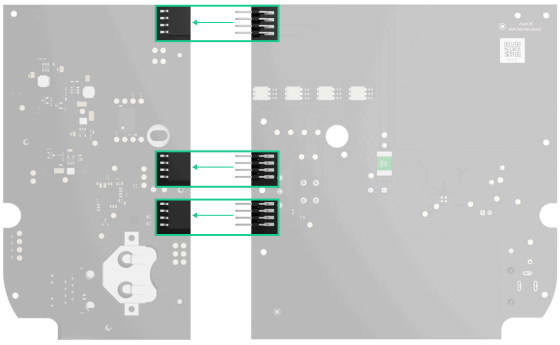

Please note: the board contacts should be plugged into the bottom row of the connector (closest to the board). When connected correctly, the boards

are on the same level.

11. Reassemble the device enclosure in the reverse order and tighten the screws.

12. Install the hard drive into the NVR enclosure.

13. Lower the hard drive latch.

14. Secure the hard drive in the NVR enclosure with the bundled screw.

15. Connect the external power and Ethernet cables to the video recorder.

16. Apply power to the video recorder.

> Do not connect the power cable with voltage that exceeds the acceptable input voltage of 12V PSU for NVR.

17. Switch on the device.

18. Insert the video recorder into SmartBracket.

Check the external power supply state in the Ajax app. If there is no power, and you are using a terminal adapter, check the polarity of the connected wires. If there is no power even after reconnecting, please contact the **Ajax Support Service**.

Maintenance

The device does not require maintenance.

Technical specifications

All technical specifications of 12V PSU for NVR

Compliance with standards

Ajax devices compatibility

Warranty

The warranty for the products of the “Ajax Systems Manufacturing” Limited Liability Company is valid for 2 years after purchase.

If the device does not operate properly, we recommend contacting support service first, as most technical issues can be resolved remotely.

Warranty obligations

User Agreement

Contact Technical Support:

- email
- Telegram

Manufactured by “AS Manufacturing” LLC