Hanwha Vision

VMS (Video Management Software) Appliance

Quick Guide

BRB-X3210S1E
BRB-X32101E
BRB-X1610SE
BRB-X1610E

CE

Package Contents

Please unwrap the product, and place the product on a flat place or in the place to be installed.
Please check the following contents are included in addition to the main unit.

- The appearance of the components may differ from the image shown.
- Accessory category and quantity may differ depending on sales region.
- For some regions, HDD is not pre-installed. The numbers of HDD fixing screws and SATA cables vary depending on the fixed number of HDDs.

BRB-X3210S1E/BRB-X32101E

VMS Appliance	Mouse	Keyboard
Quick Guide	Power Cable	Rack Mount Bracket (2 ea)
SATA Power Cable	SATA Data Cable (4 ea)	HDD Fixing Screw (16 ea)
Bracket Fixing Screw (4 ea)		

BRB-X1610SE/BRB-X1610E

VMS Appliance	Mouse	Keyboard
Quick Guide	Power Cable	Rack Mount Bracket (2 ea)
SATA Power Cable	SATA Data Cable (2 ea)	HDD Fixing Screw (8 ea)
Bracket Fixing Screw (4 ea)		

- Use the product in a flat, horizontal position as illustrated.

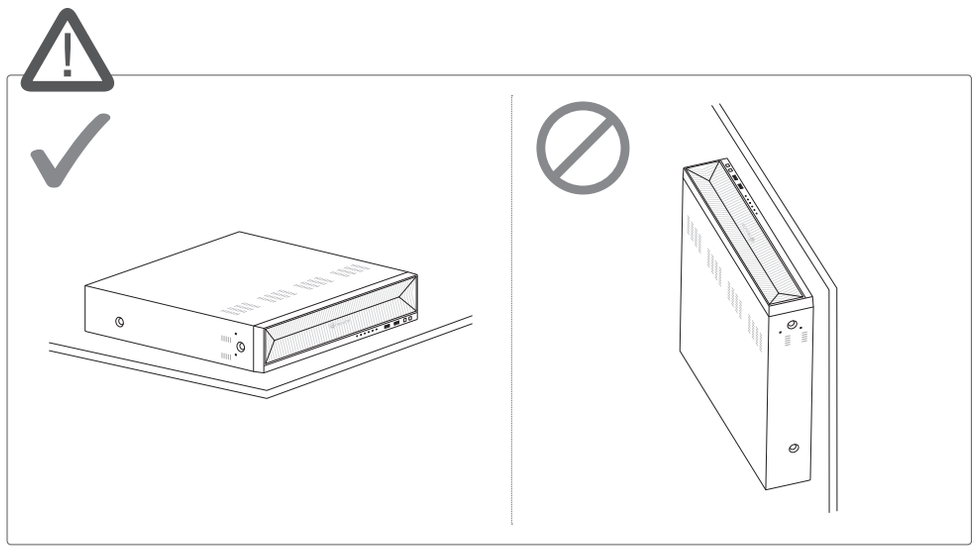

Hanwha Vision Co., Ltd. is a surveillance camera manufacturer that provides video information equipment with various functions. Users must comply with local laws when using our devices. Users are solely responsible for any illegal use of our products.

Part Names and Functions (Front)

BRB-X3210S1E/BRB-X32101E

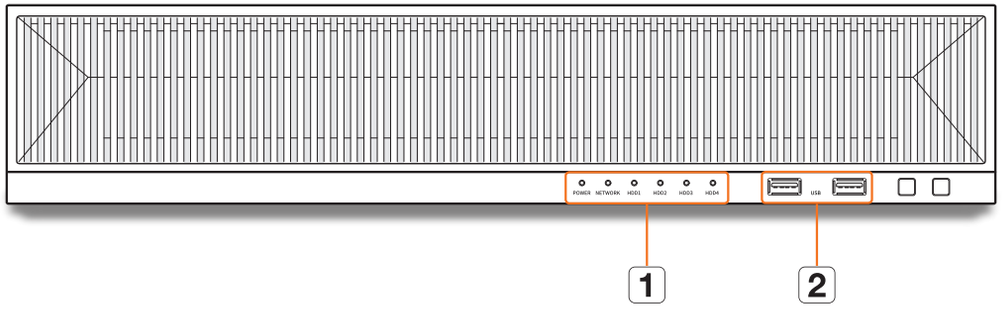

BRB-X1610SE/BRB-X1610E

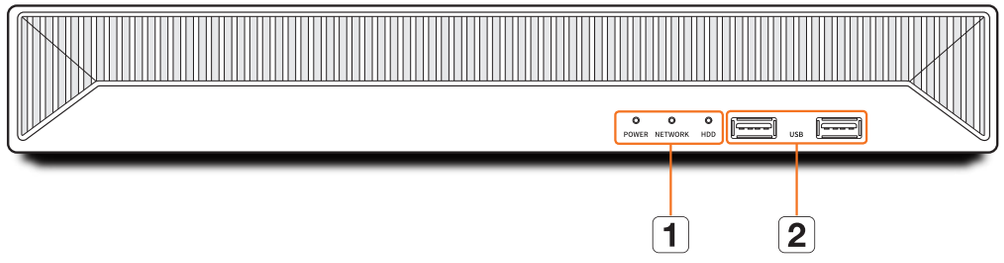

	Name	Functions
1	LED Indicator	**POWER** : Shows the power ON/OFF status.
		NETWORK : Displays the status of the NETWORK2 port connection and data transmission.
		HDD : Displays the operation status of the HDD. The LED blinks when the HDD is active.
2	USB	Connects the USB devices. (USB 2.0 supported)

Part Names and Functions (Rear)

BRB-X3210S1E

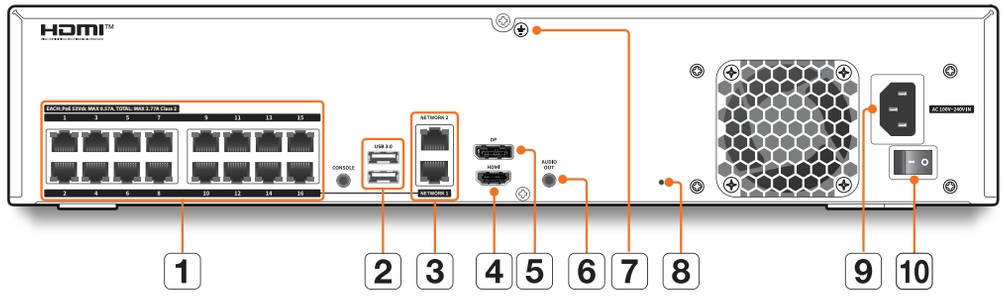

BRB-X32101E

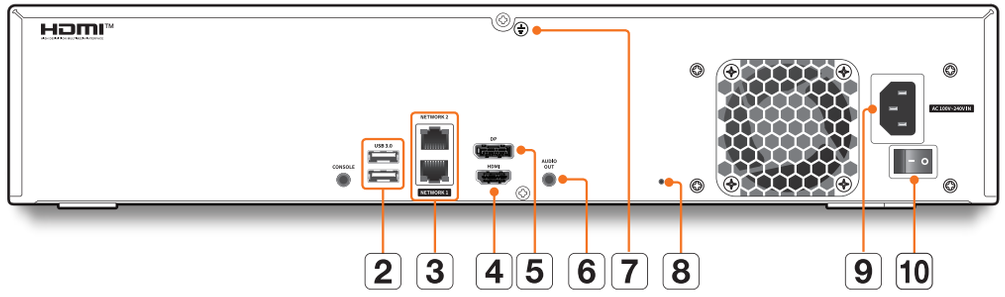

BRB-X1610SE

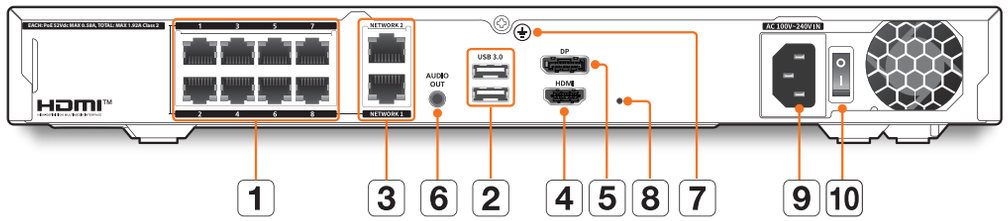

BRB-X1610E

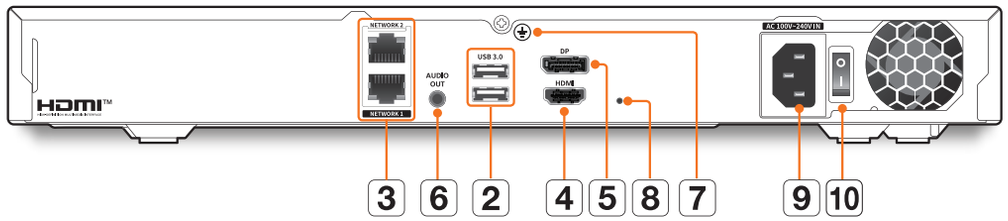

	Name	Functions
1	PoE	Supply power to the camera.
2	USB 3.0	Port for connecting USB devices.
3	NETWORK 1	Port for camera connections; it receives video from a camera.
	NETWORK 2	Port recommended for network connection and client access.
4	HDMI	HDMI video output port.
5	DP	DP video output port.
6	AUDIO OUT	Audio output port.
7	Ground Connection	Port for connecting a separate ground cable. For safe handling of the device, please add a ground wire.
8	Factory default	You can reset all settings of the product to factory defaults. ■ Performing a factory reset will erase all recorded data on the HDD.
9	Power	Port for power input.
10	Power Switch	Power on/off switch.

- When connecting the AC power cord or turning on the power switch, there may be a luminous (light) phenomenon inside the SMPS. This phenomenon is the normal operation of the SMPS protection element.
- **CONSOLE** is designed for the service repair purpose only.

Installing the HDD

- If you are adding a new or previously used HDD to this product in addition to the HDD(s) originally installed, format the new HDD manually in the set before use.
- For replacement or installation of an additional HDD you must contact your dealer or our customer center.

BRB-X3210S1E/BRB-X32101E

- The following figures are based on Model BRB-X3210S1E.

1 Remove the screws from the left/right sides and back side, and push the cover back to release it.

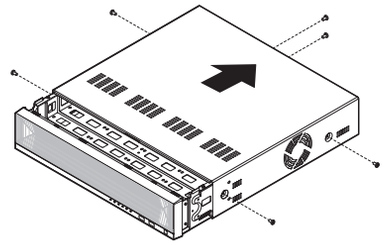

2 Remove the screws from the left/right sides and release the bracket.

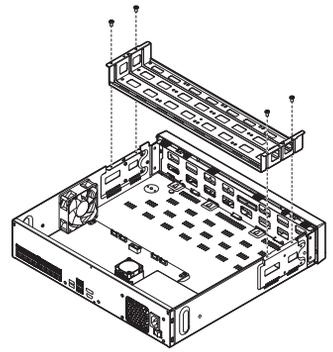

3 Mount an HDD into the bracket, and fix it using screws.

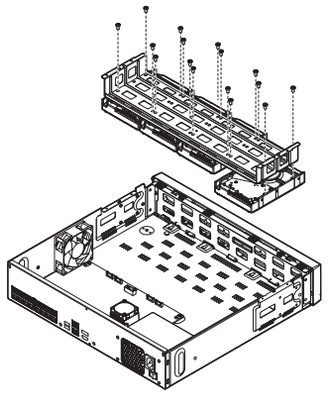

4 Fix the HDD-mounted bracket to the product using screws.

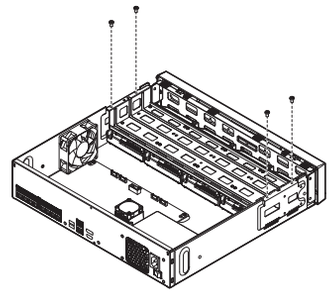

5 Connect the SATA/power cable of the HDD to the connector of the main board.

- Refer to the figure below for the HDD location number and connector number.

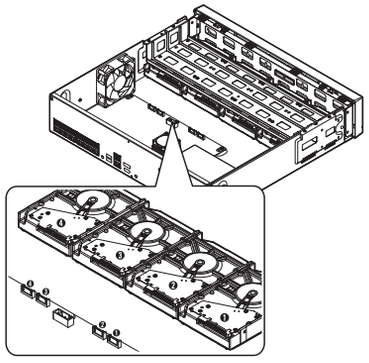

6 Make sure that there is no problem in the connection port and routing inside the product, and then fix it using screws after closing the cover.

- When closing the cover, be careful not to damage the cable.

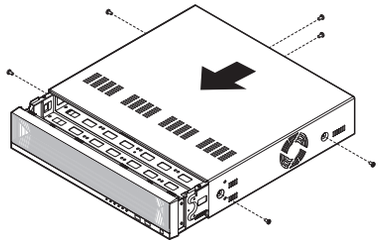

BRB-X1610SE/BRB-X1610E

- The following figures are based on Model BRB-X1610SE.

1 Remove the screws from the left/right sides and back side, and push the cover back to release it.

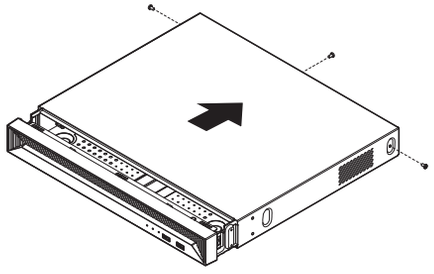

2 Connect the SATA/power cable of the HDD to the connector of the main board.

- Refer to the figure below for the HDD location number and connector number.

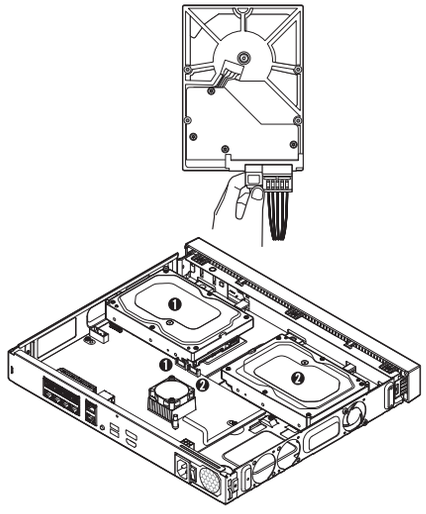

! - Gently press the connector before removing the HDD. Do not force to pull the cable.

3 Use the screws to fix the HDD to the bottom of the product.

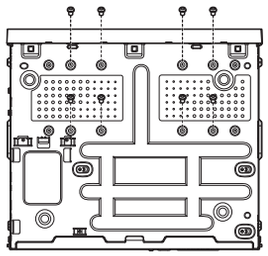

4 Make sure that there is no problem in the connection port and routing inside the product, and then fix it using screws after closing the cover.

- When closing the cover, be careful not to damage the cable.

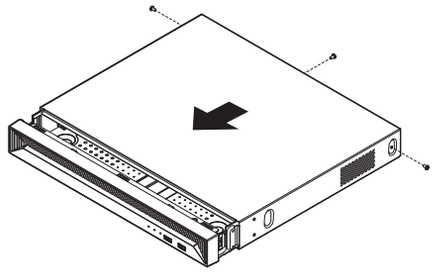

Attaching the Brackets

Attach the brackets to the left and right sides of the product using screws.

- Fix the screws not to be loosened by vibrations.

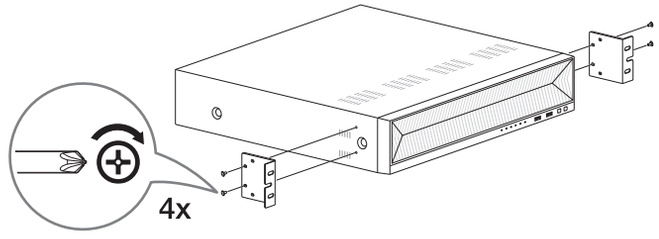

Example) BRB-X3210S1E

Using Product Information

You can check the product information/manual/firmware information/FAQ/HDD compatibility list on the homepage or mobile web of your smartphone.

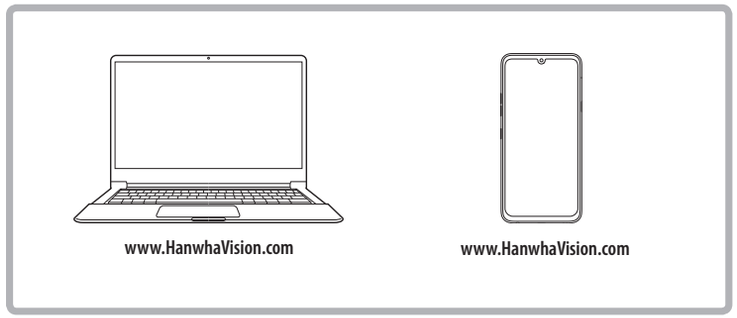

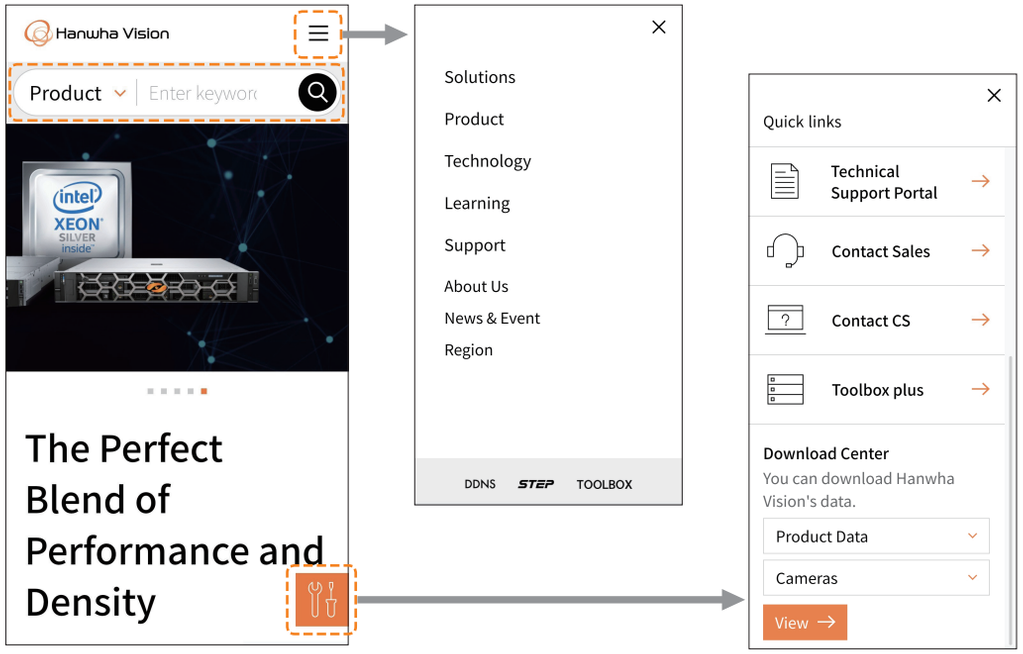

Connecting to a Network Using a Router

If you want to add a PC and 1 to 3 of these products in an environment using xDSL/Cable modem, you can use the router with only one Internet line.

This guide is an installation guide for network beginners. Follow the instructions to set up your router, local PC, and this product.

Connecting the cable

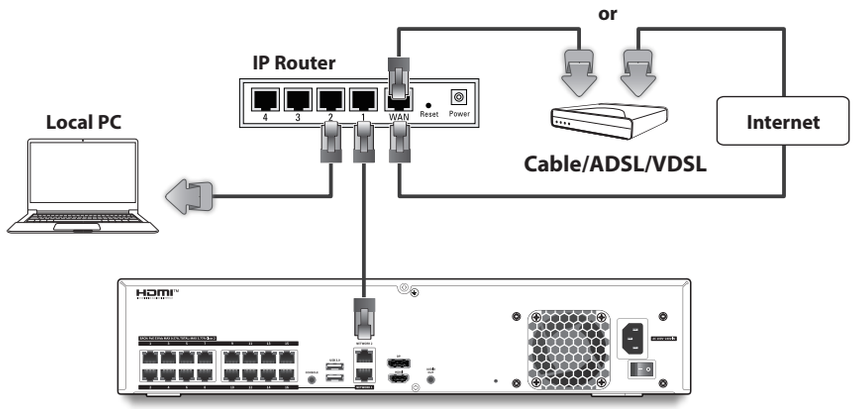

VMS Appliance (Example: BRB-X3210S1E)

Connecting a router with PC

■ Refer to the router's user manual.

Connecting the product to a router

Configure the <**IP address**> and <**Gateway**> in this product's menu below:
Settings > **Hardware** > **Servers** > **Network** > **IP & port** > **Network settings**

※ The <**Default gateway**> checked in the [**cmd.exe**] window of the local PC and the <**Gateway**> of this product must be the same.

※ The first three numbers of this product <**IP address**> should match the first three of the <**Default gateway**> checked in the [**cmd.exe**] window of the local PC.

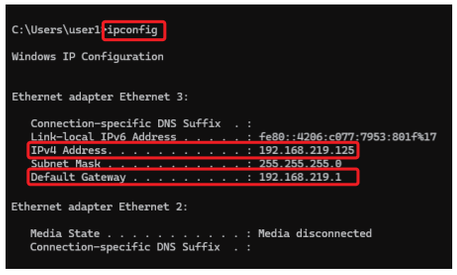

<Command Prompt screen example>

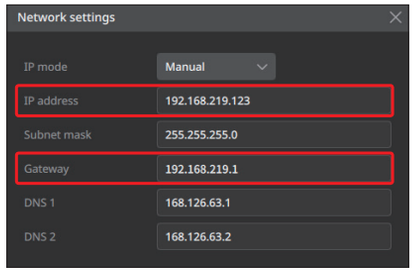

<VMS Appliance screen example>

This device complies with Industry Canada license-exempt RSS standard(s). Operation is subject to the following two conditions:
(1) This device may not cause interference, and (2) this device must accept any interference, including interference that may cause undesired operation of the device.

Le présent appareil est conforme aux CNR d'Industrie Canada applicables aux appareils radio exempts de licence. L'exploitation est autorisée aux deux conditions suivantes :
(1) l'appareil ne doit pas produire de brouillage, et (2) l'utilisateur de l'appareil doit accepter tout brouillage radioélectrique subi, même si le brouillage est susceptible d'en compromettre le fonctionnement.

CAUTION

- RISK OF EXPLOSION IF BATTERY IS REPLACED BY AN INCORRECT TYPE. DISPOSE OF USED BATTERIES ACCORDING TO THE INSTRUCTIONS.
- Do not ingest battery, Chemical Burn Hazard.
- This product contains a coin / button cell battery. If the coin / button cell battery is swallowed, it can cause severe internal burns in just 2 hours and can lead to death.
- Keep new and used batteries away from children. If the battery compartment does not close securely, stop using the product and keep it away from children. If you think batteries might have been swallowed or placed inside any part or the body, seek immediate medical attention.
- Batteries (battery pack or batteries installed) shall not be exposed to excessive heat such as sunshine, fire or the like.
- Do not install and use the wrong type of battery.
- Do not leave the battery in a mechanically crush or cut it because it can explode.
- Do not leave the battery in a high temperature environment.
- Do not leave the battery in a low-pressure environment.

ATTENTION

- IL Y A RISQUE D'EXPLOSION SI LA BATTERIE EST REMPLACÉE PAR UNE BATTERIE DE TYPE INCORRECT.METTRE AU REBUT LES BATTERIES USAGÉES CONFORMÉMENT AUX INSTRUCTIONS.
- Ne pas ingérer la pile, risque de brûlure chimique.
- Ce produit contient une pile de type bouton/pièce de monnaie. Si la pile de type bouton/pièce de monnaie est avalée, elle peut causer de graves brûlures internes en seulement 2 heures et peut entraîner la mort.
- Gardez les piles neuves et usagées hors de portée des enfants. Si le compartiment de la pile ne se ferme pas correctement, cessez d'utiliser le produit et gardez-le d'atteinte des enfants. Si vous suspectez que des piles ont été avalées ou insérées dans une partie du corps, consultez un médecin sans tarder.
- Les batteries (bloc-batterie ou batteries installées) ne doivent pas être exposées à une chaleur excessive telle que le soleil, le feu ou autre.
- N'installez pas et n'utilisez pas le mauvais type de batterie.
- Ne laissez pas la batterie dans un endroit où elle pourrait être écrasée ou découpée mécaniquement, car elle pourrait exploser.
- Ne laissez pas la batterie dans un environnement à haute température.
- Ne laissez pas la batterie dans un environnement à basse pression.

HEVC Advance™
Covered by patents at patentlist.accessadvance.com

HDMI™ HIGH-DEFINITION MULTIMEDIA INTERFACE

The terms HDMI, HDMI High-Definition Multimedia Interface, HDMI Trade dress and the HDMI Logos are trademarks or registered trademarks of HDMI Licensing Administrator, Inc.

eco RoHS compliant

Hanwha Vision cares for the environment at all product manufacturing stages, and is taking measures to provide customers with more environmentally friendly products.
The Eco mark represents Hanwha Vision's devotion to creating environmentally friendly products, and indicates that the product satisfies the EU RoHS Directive.

Correct Disposal of This Product (Waste Electrical & Electronic Equipment)

(Applicable in the European Union and other European countries with separate collection systems)

This marking on the product, accessories or literature indicates that the product and its electronic accessories (e.g. charger, headset, USB cable) should not be disposed of with other household waste at the end of their working life. To prevent possible harm to the environment or human health from uncontrolled waste disposal, please separate these items from other types of waste and recycle them responsibly to promote the sustainable reuse of material resources.

Household users should contact either the retailer where they purchased this product, or their local government office, for details of where and how they can take these items for environmentally safe recycling.

Business users should contact their supplier and check the terms and conditions of the purchase contract. This product and its electronic accessories should not be mixed with other commercial wastes for disposal.

Correct disposal of batteries in this product

(Applicable in the European Union and other European countries with separate battery return systems.)

This marking on the battery, manual or packaging indicates that the batteries in this product should not be disposed of with other household waste at the end of their working life. Where marked, the chemical symbols Hg, Cd or Pb indicate that the battery contains mercury, cadmium or lead above the reference levels in EC Directive 2006/66. If batteries are not properly disposed of, these substances can cause harm to human health or the environment.

To protect natural resources and to promote material reuse, please separate batteries from other types of waste and recycle them through your local, free battery return system.

Hanwha
Vision