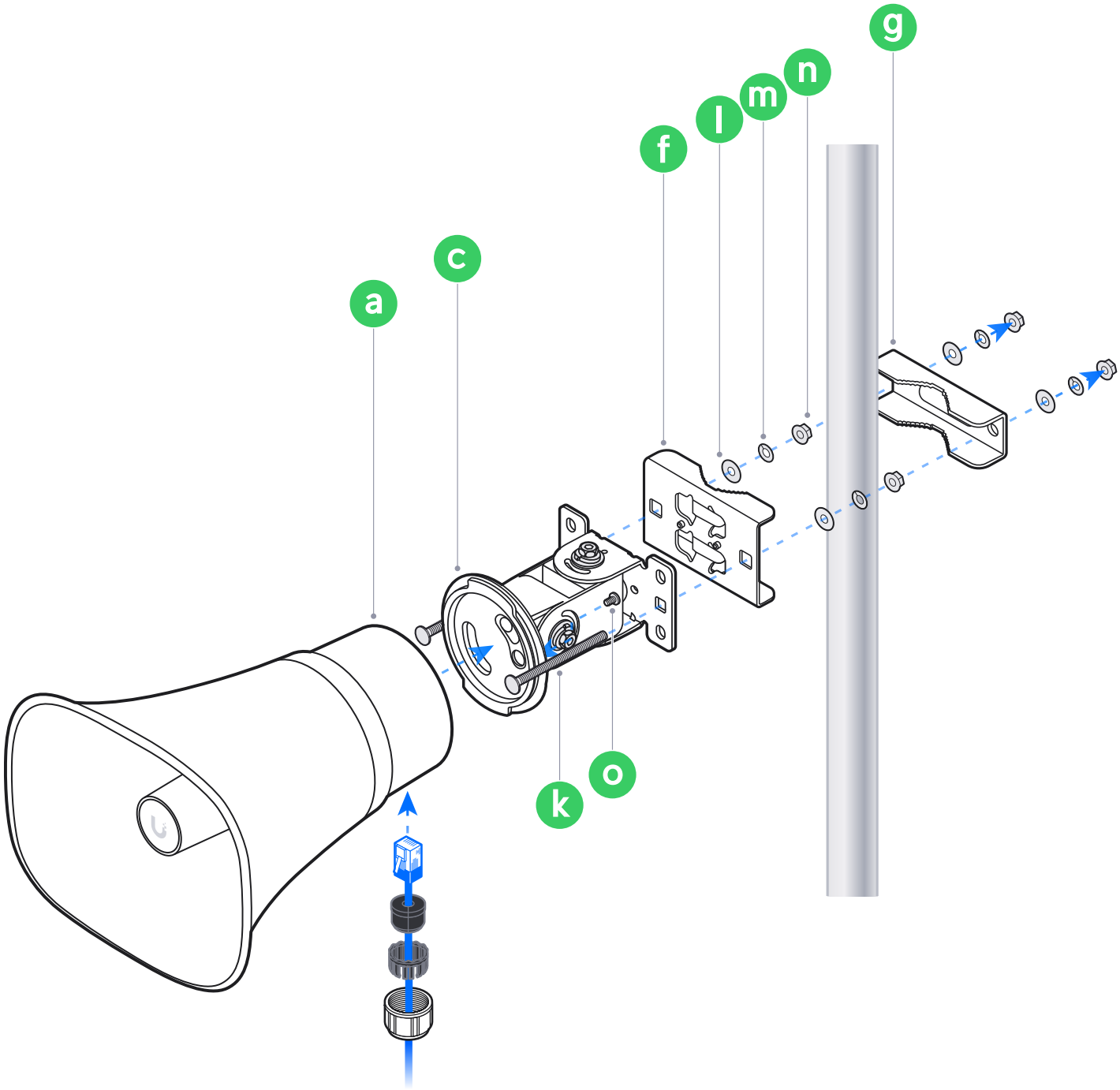
a
c
f
l
m
n
g
k
o

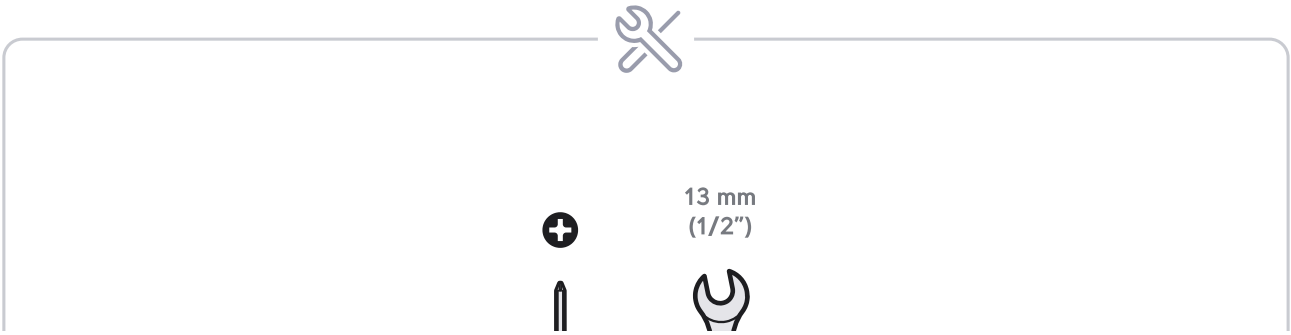
13 mm
(1/2")

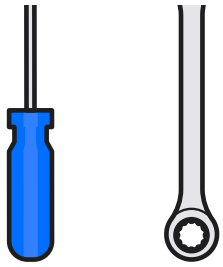

1

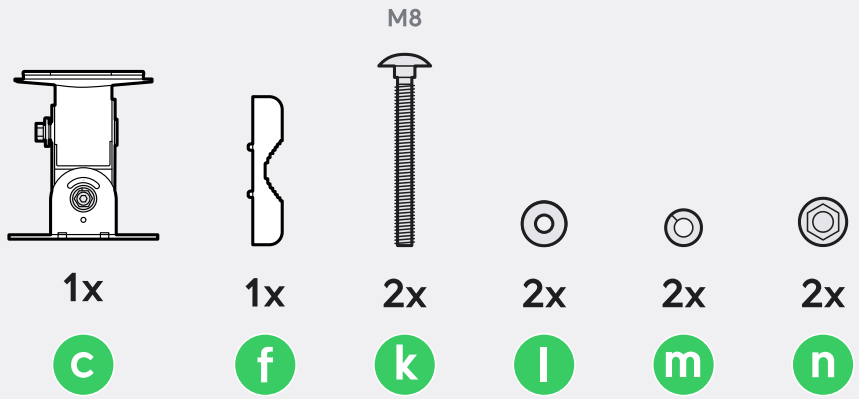

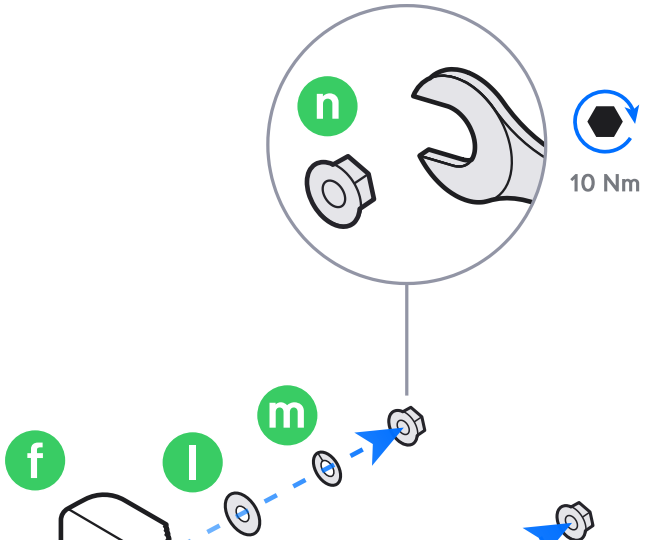

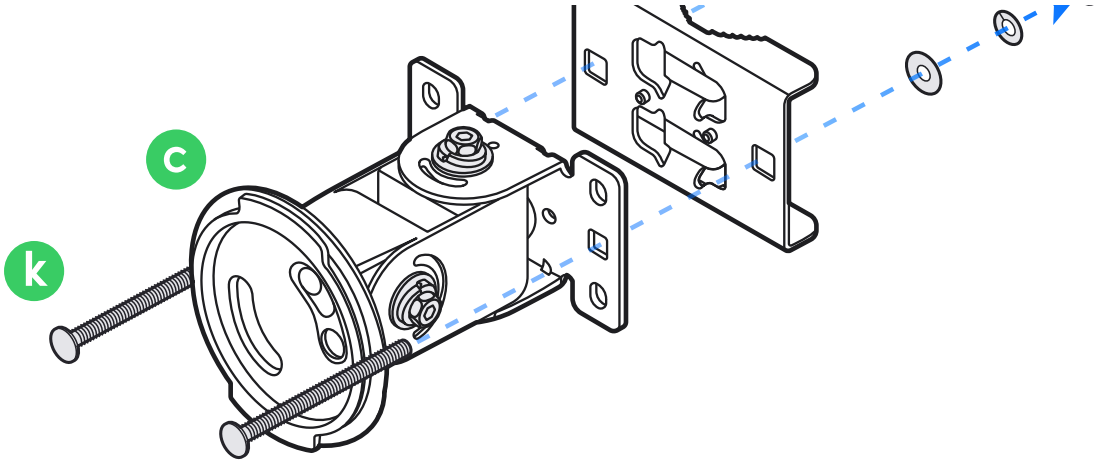

2

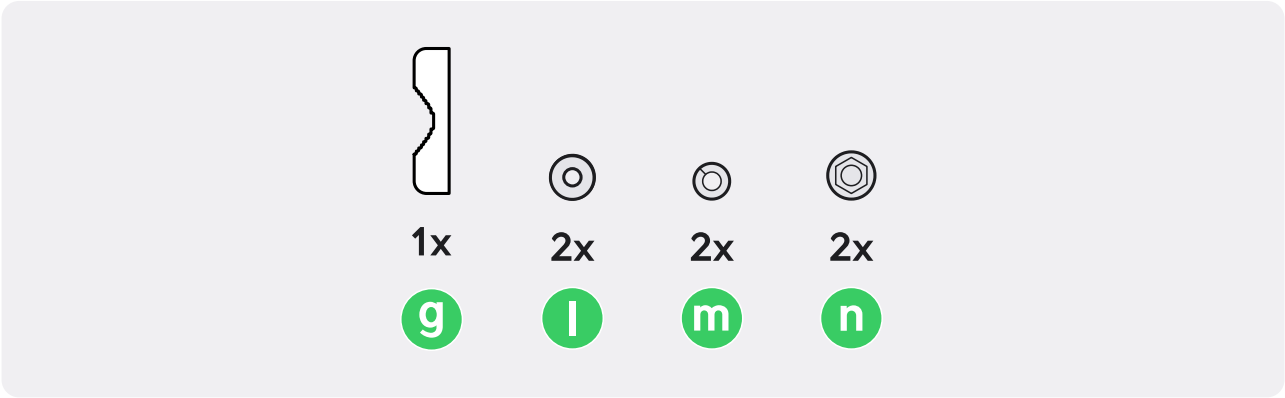

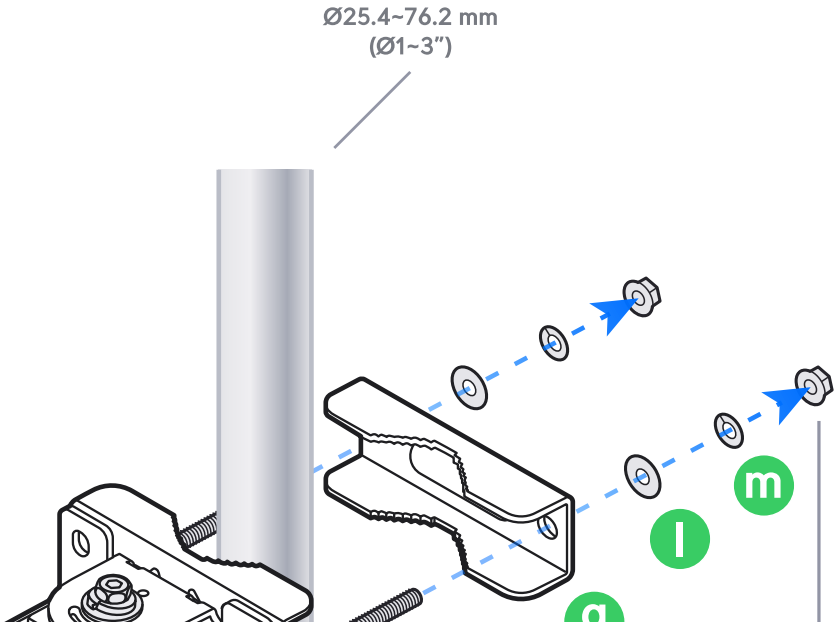

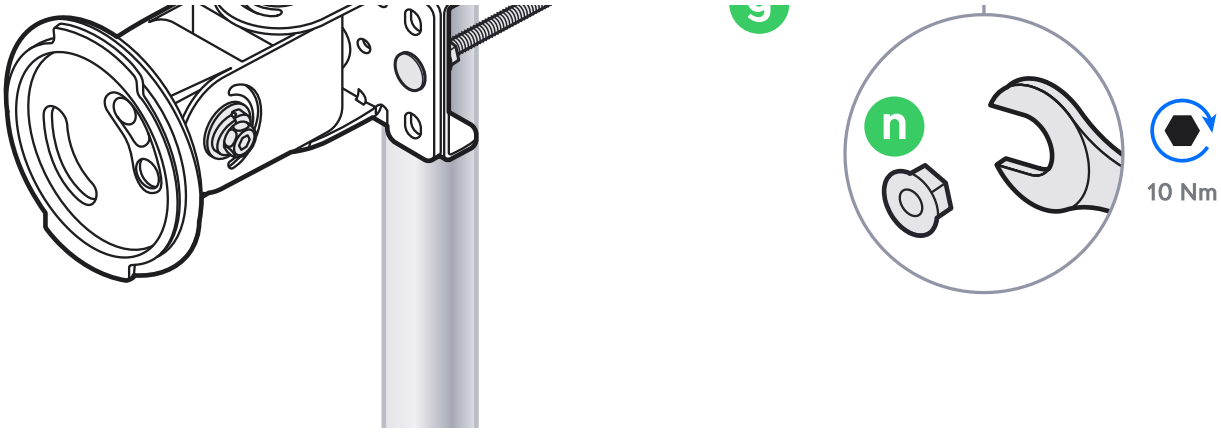

3

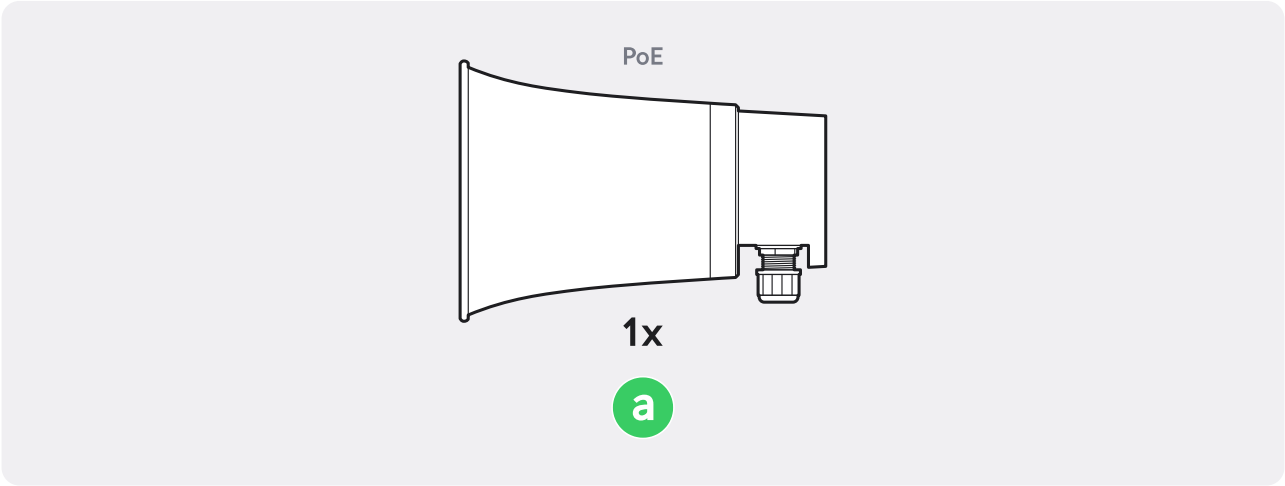

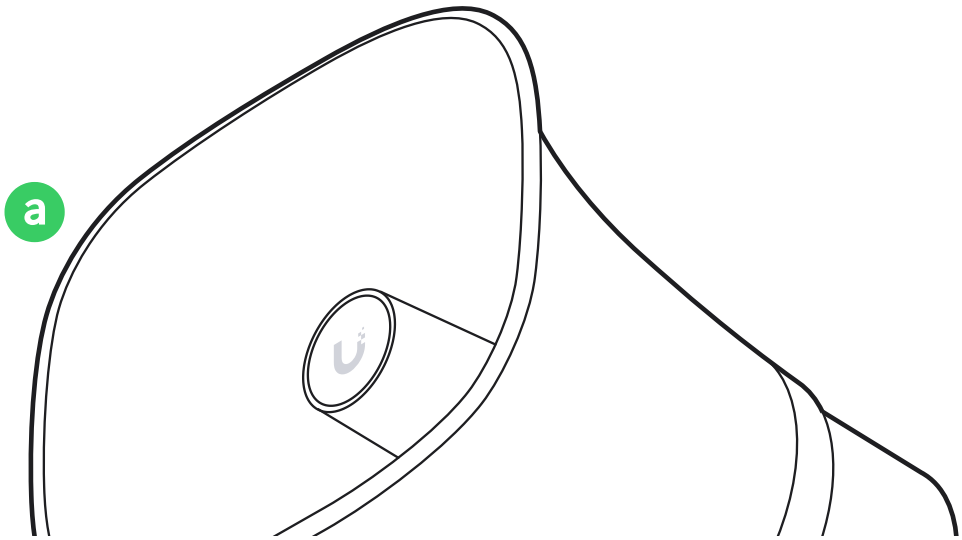

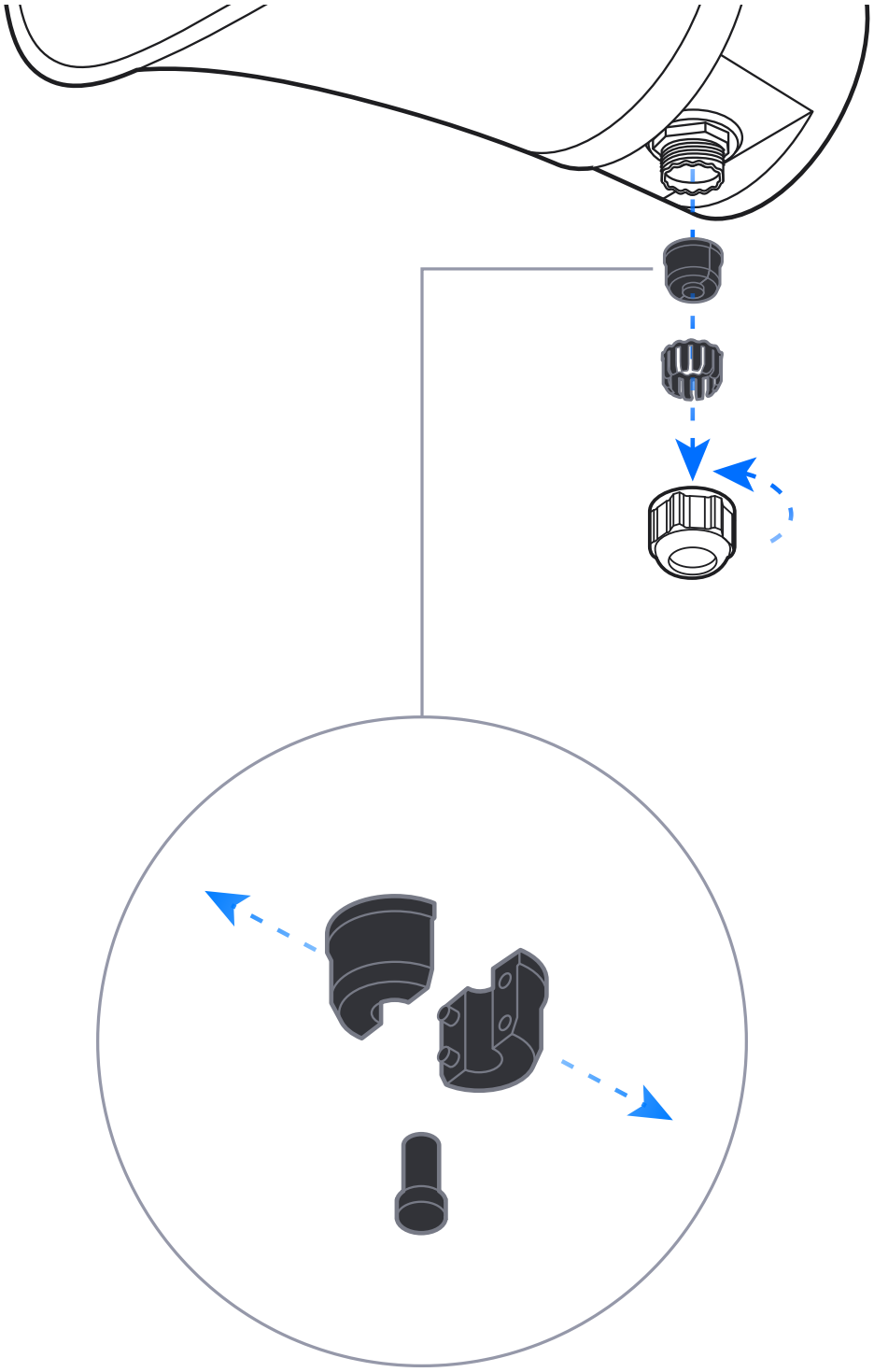

4

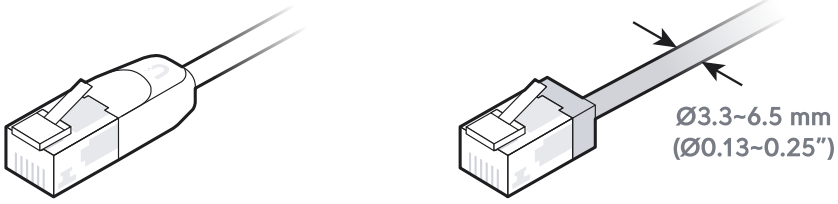

UniFi Outdoor Patch Cable

Buy ›

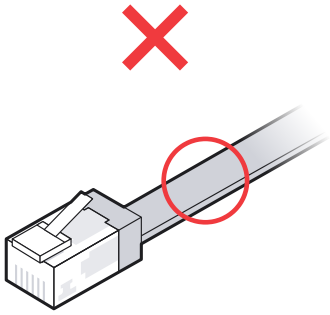

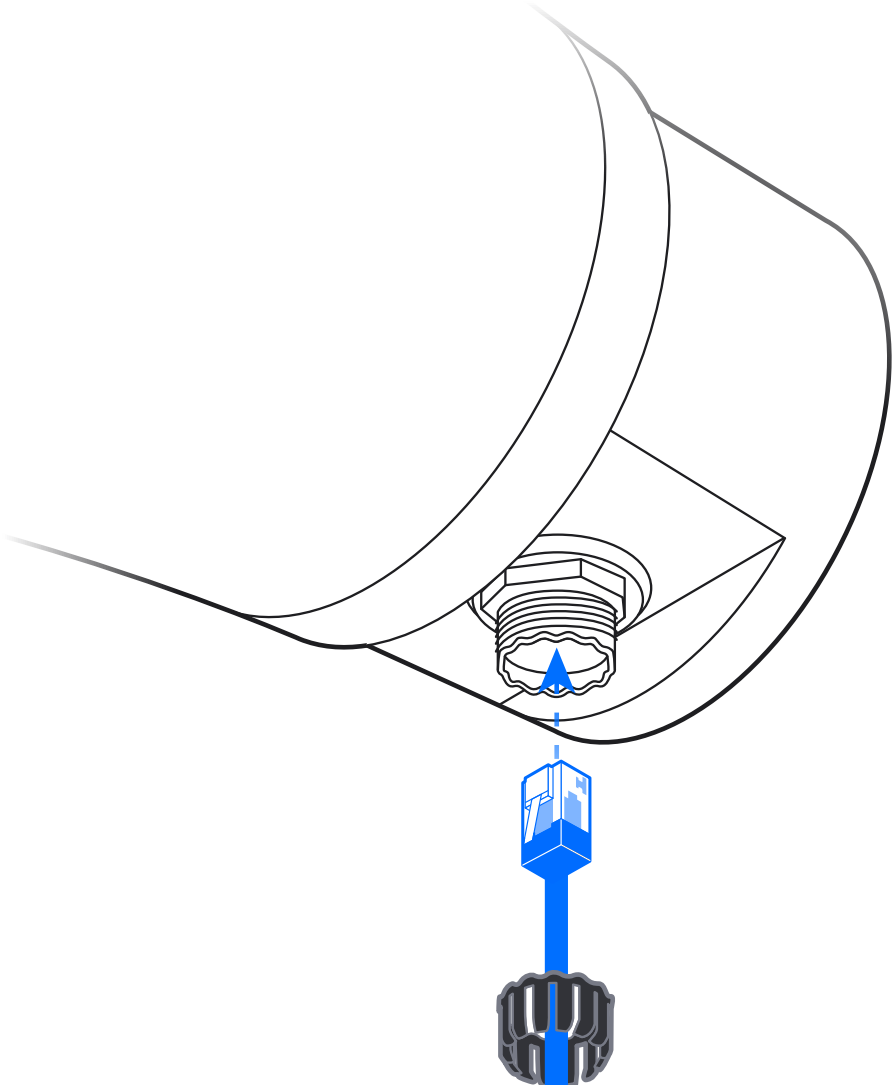

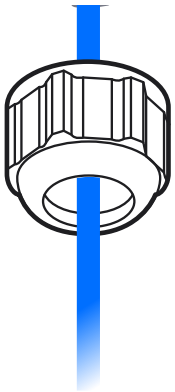

5

Ø3.3~4.5 mm
(Ø0.13~0.18")

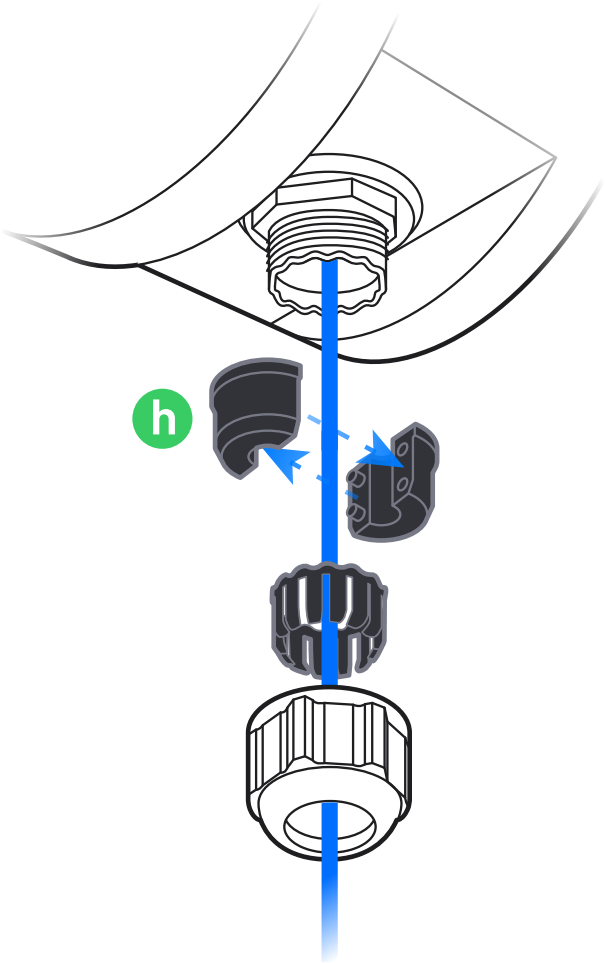

Ø4.5~6.5 mm
(Ø0.18~0.25")

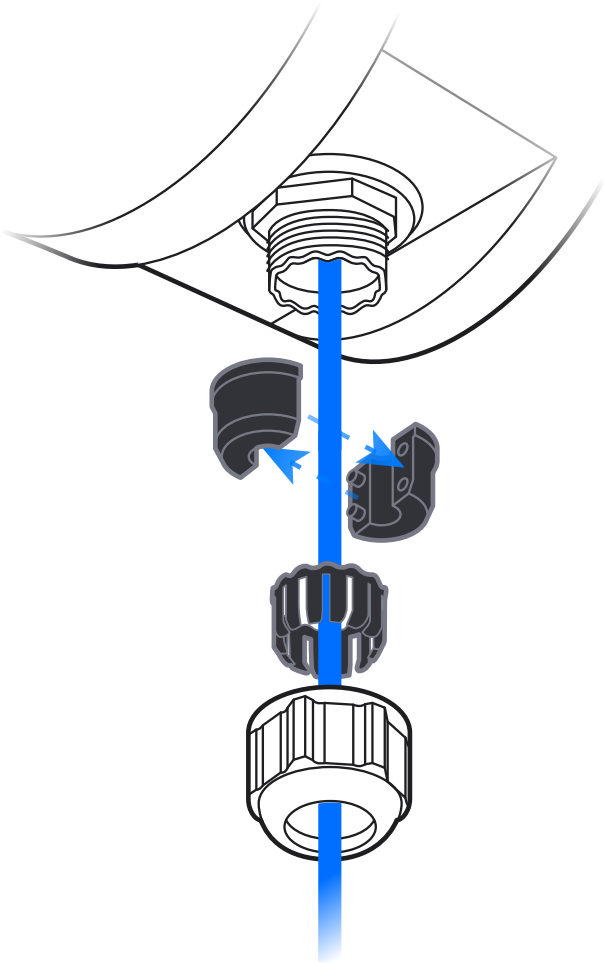

6

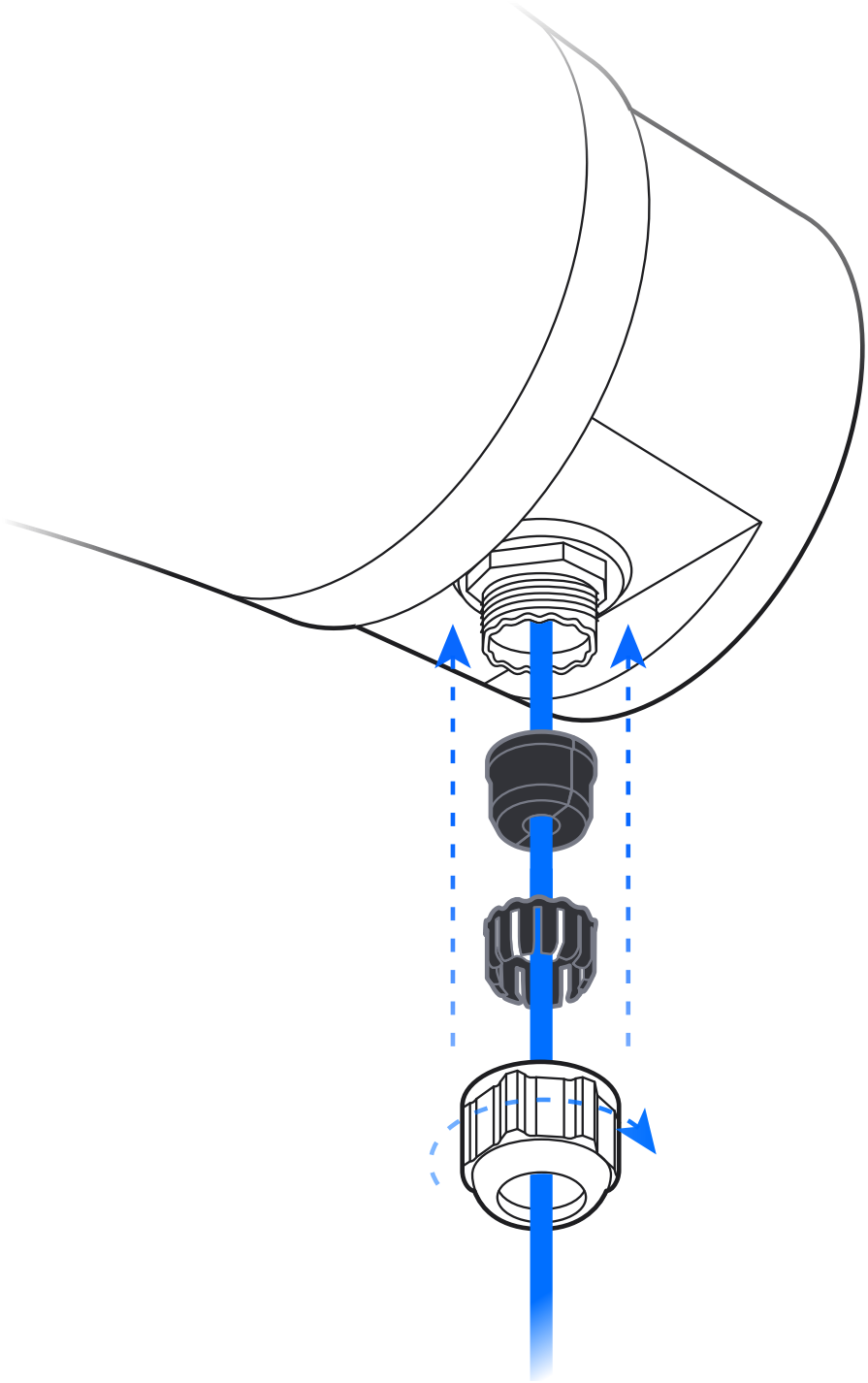

7

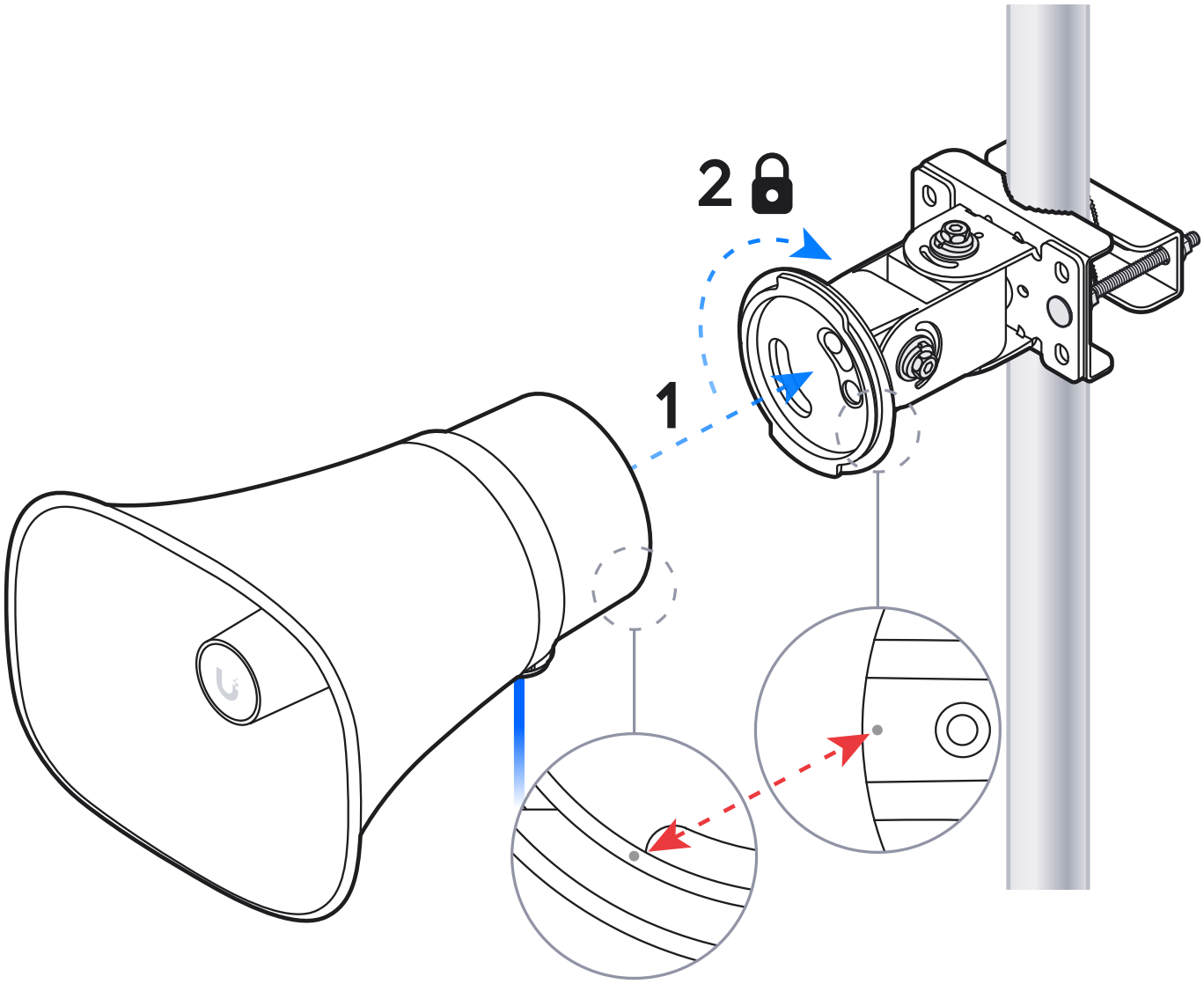

8

M4

1x

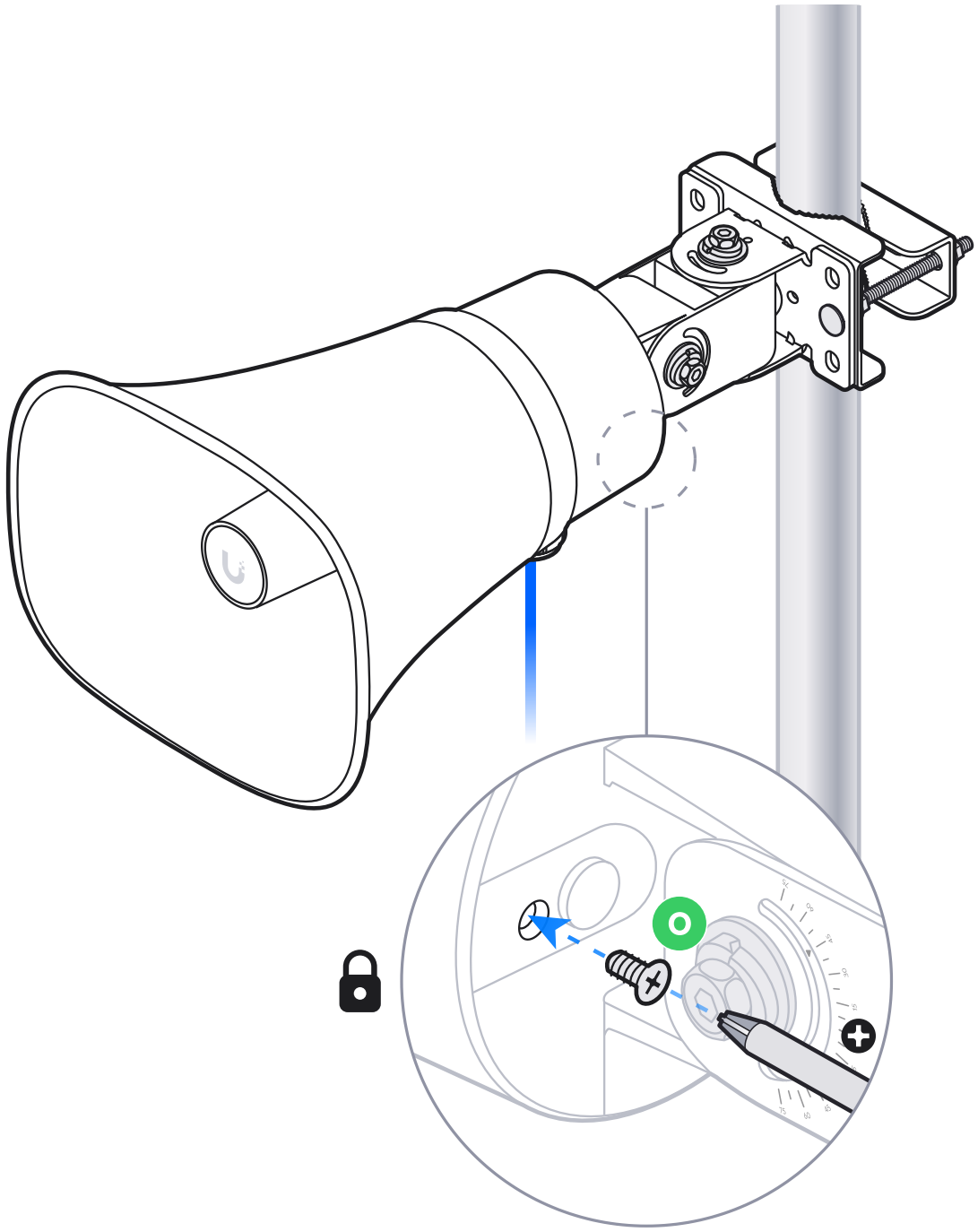

9

Internet
UniFi Cloud Gateway
Switching

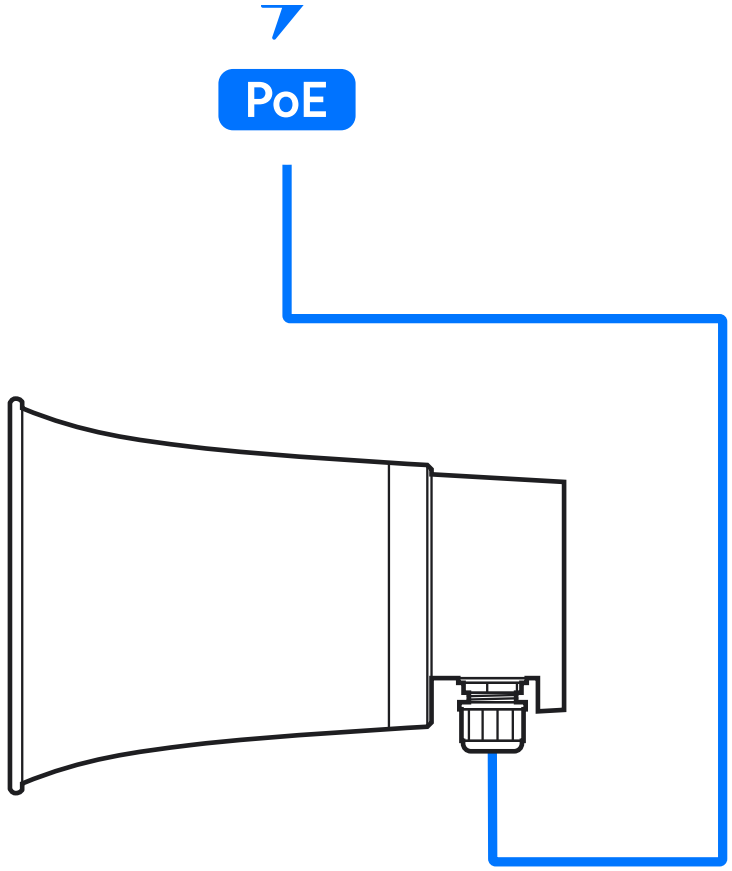

10

11

1x

p

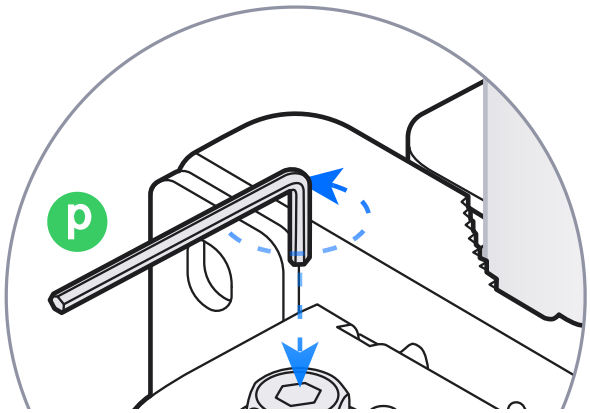

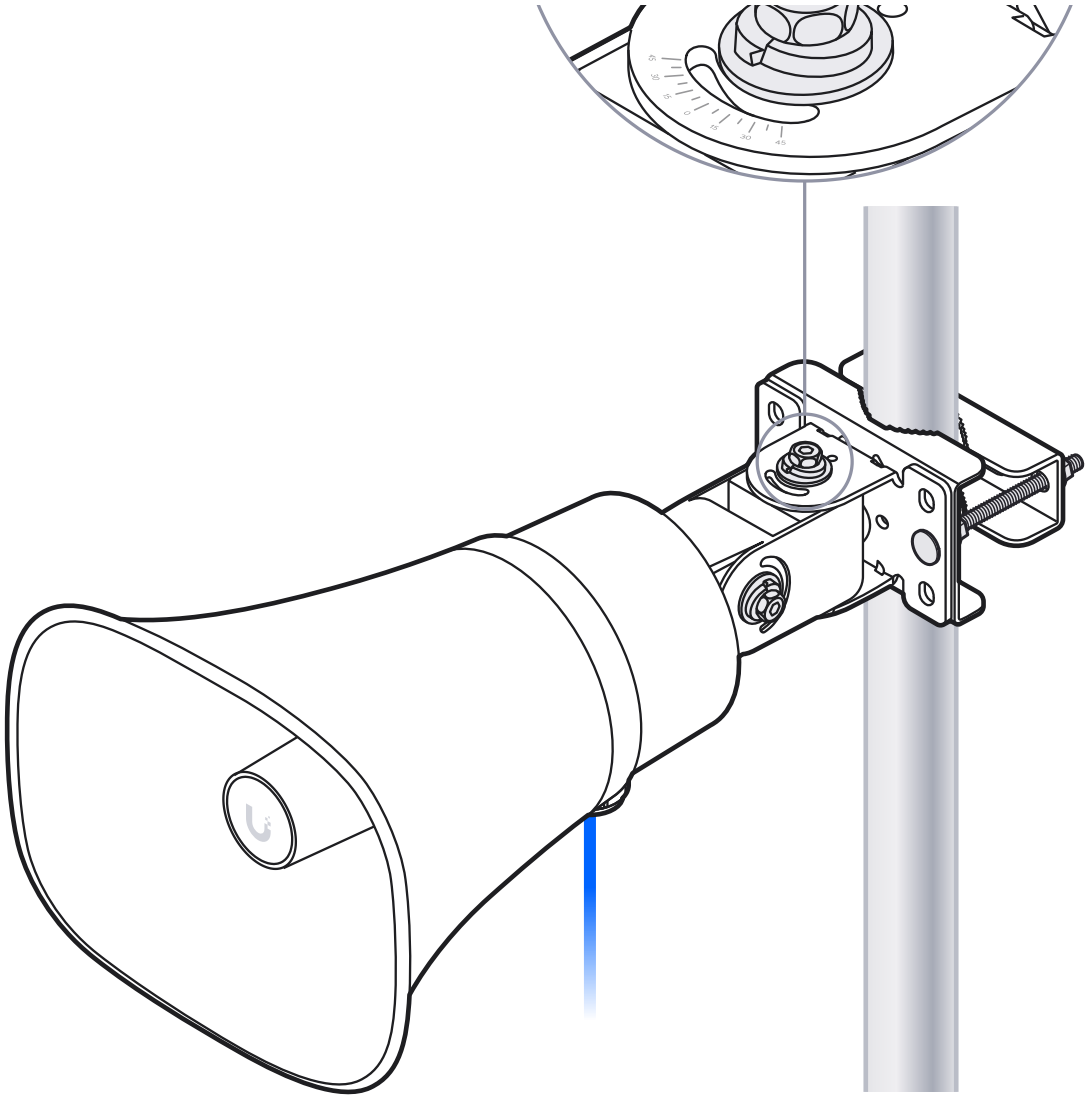

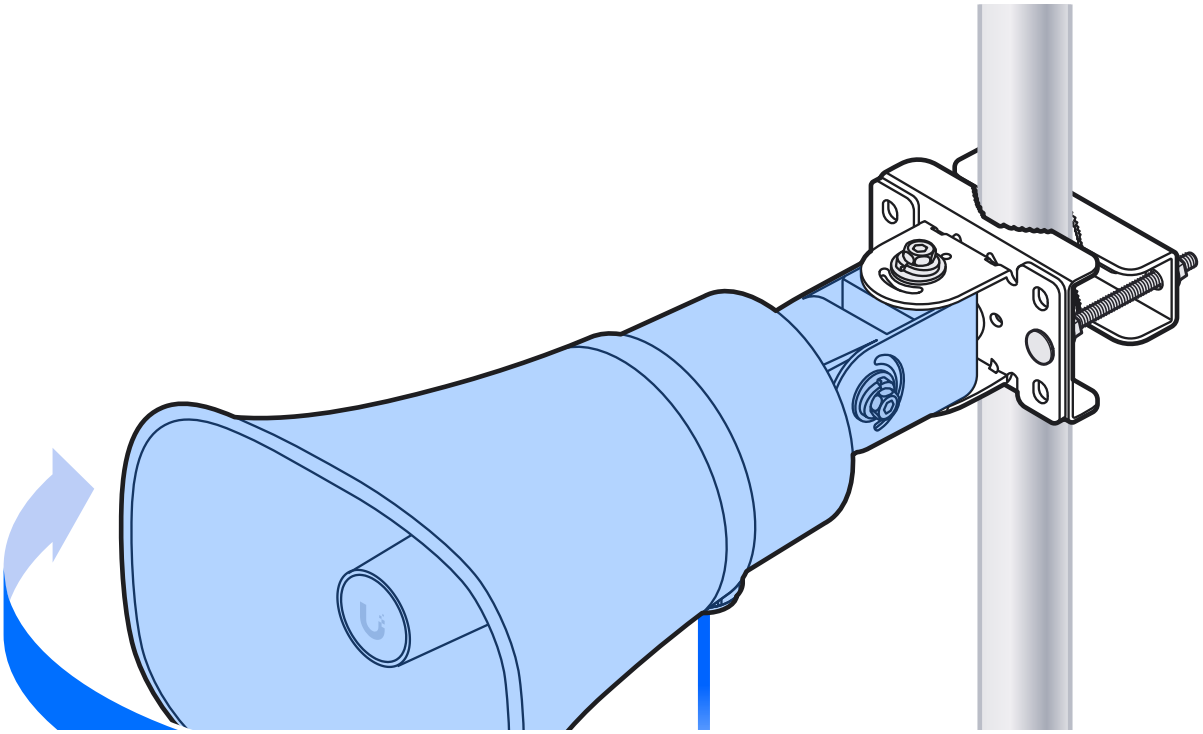

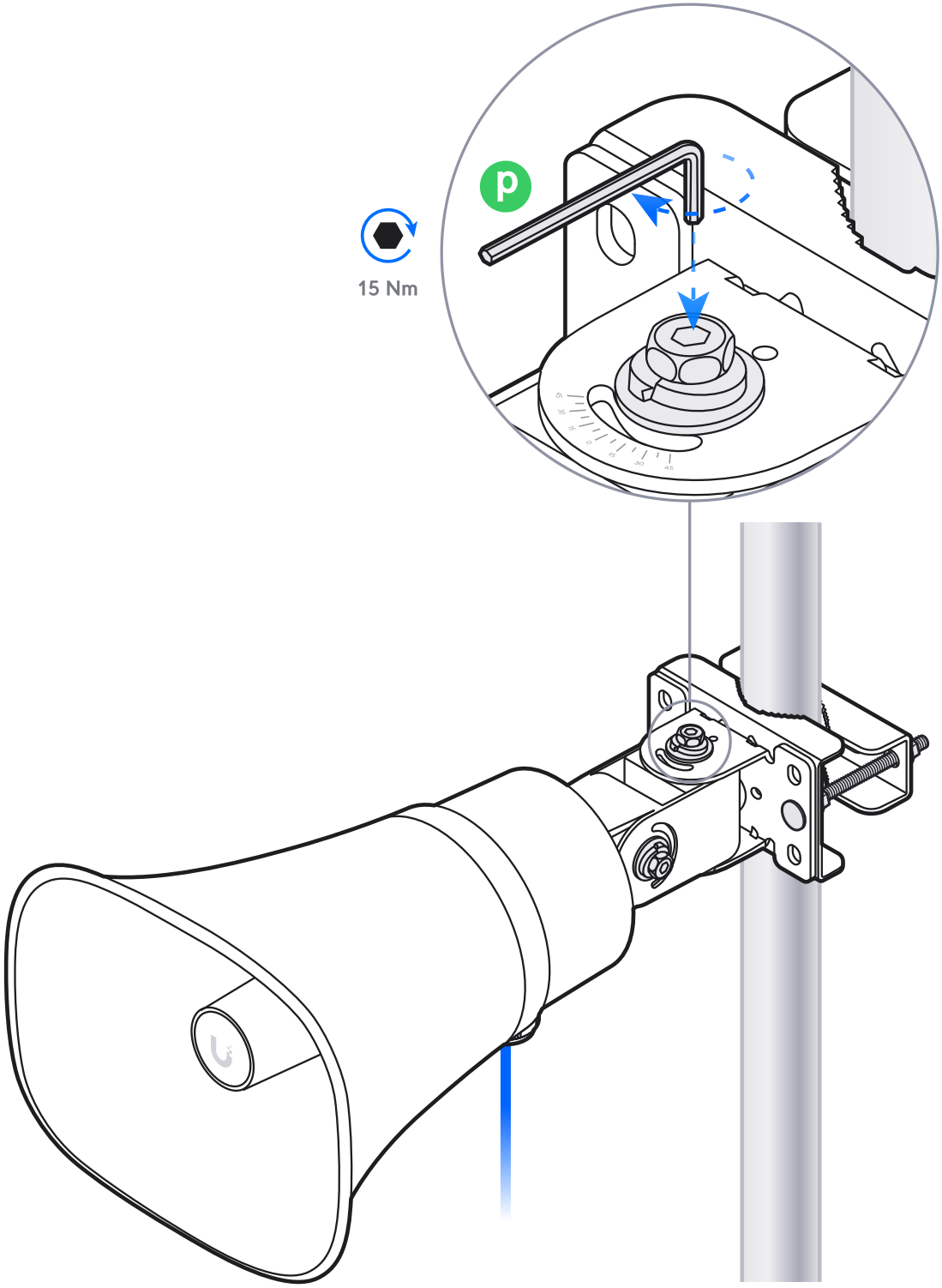
p
15 Nm

12

1x

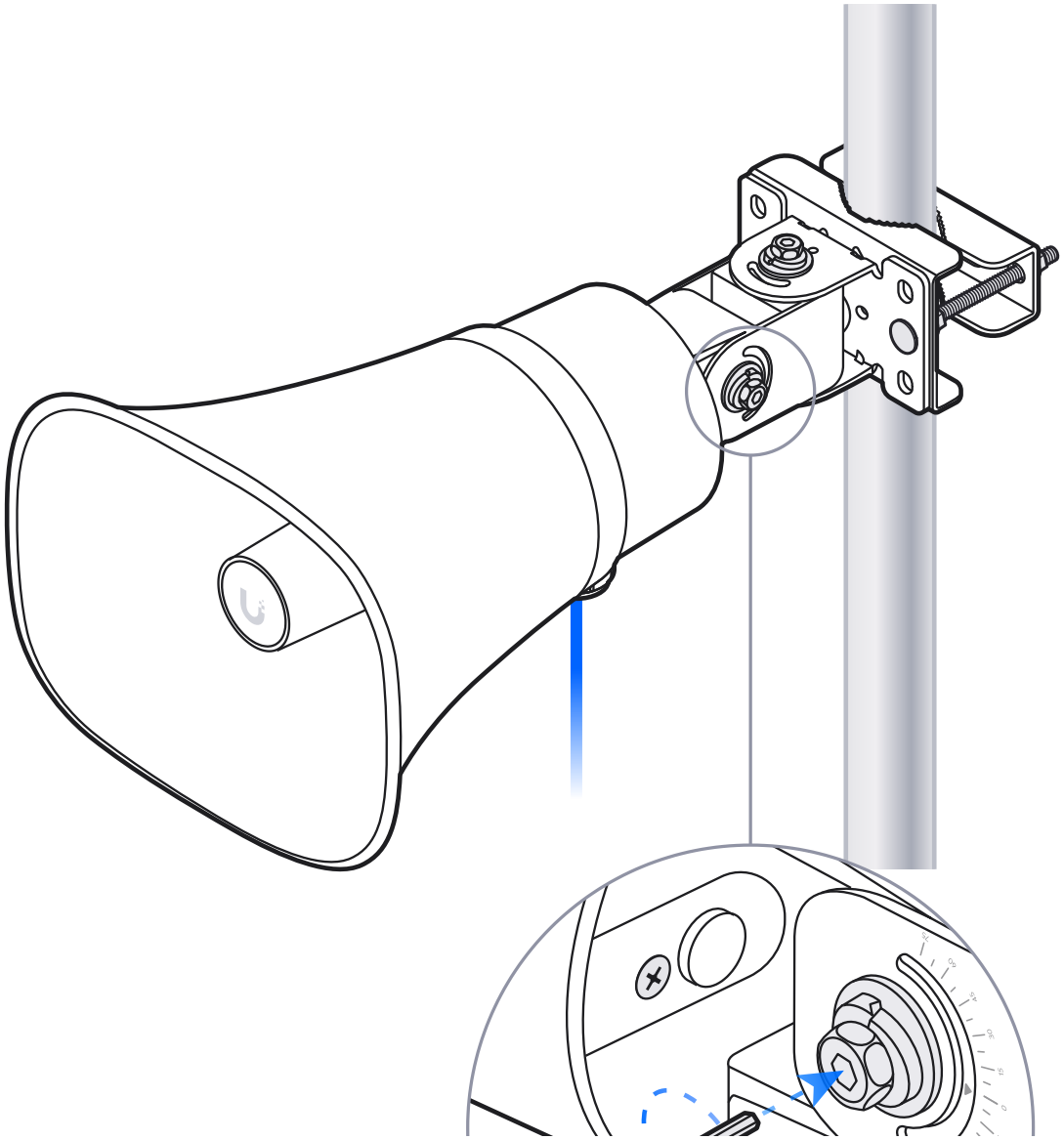

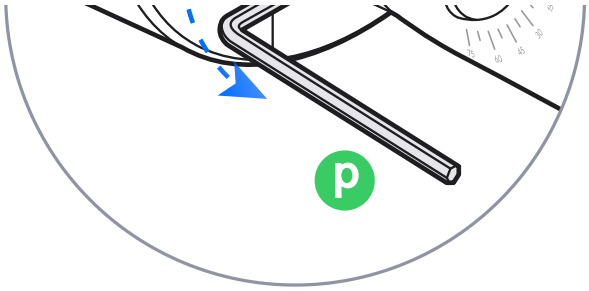
p

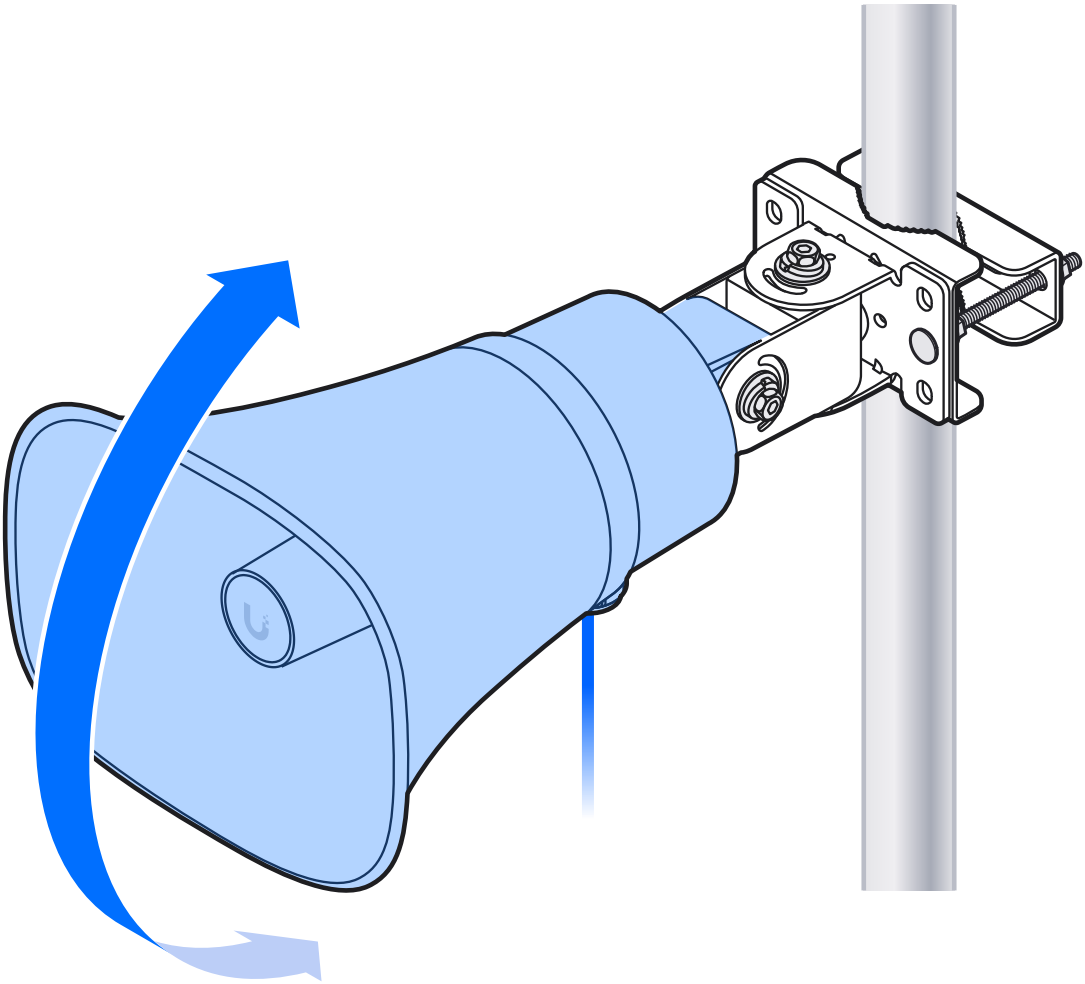

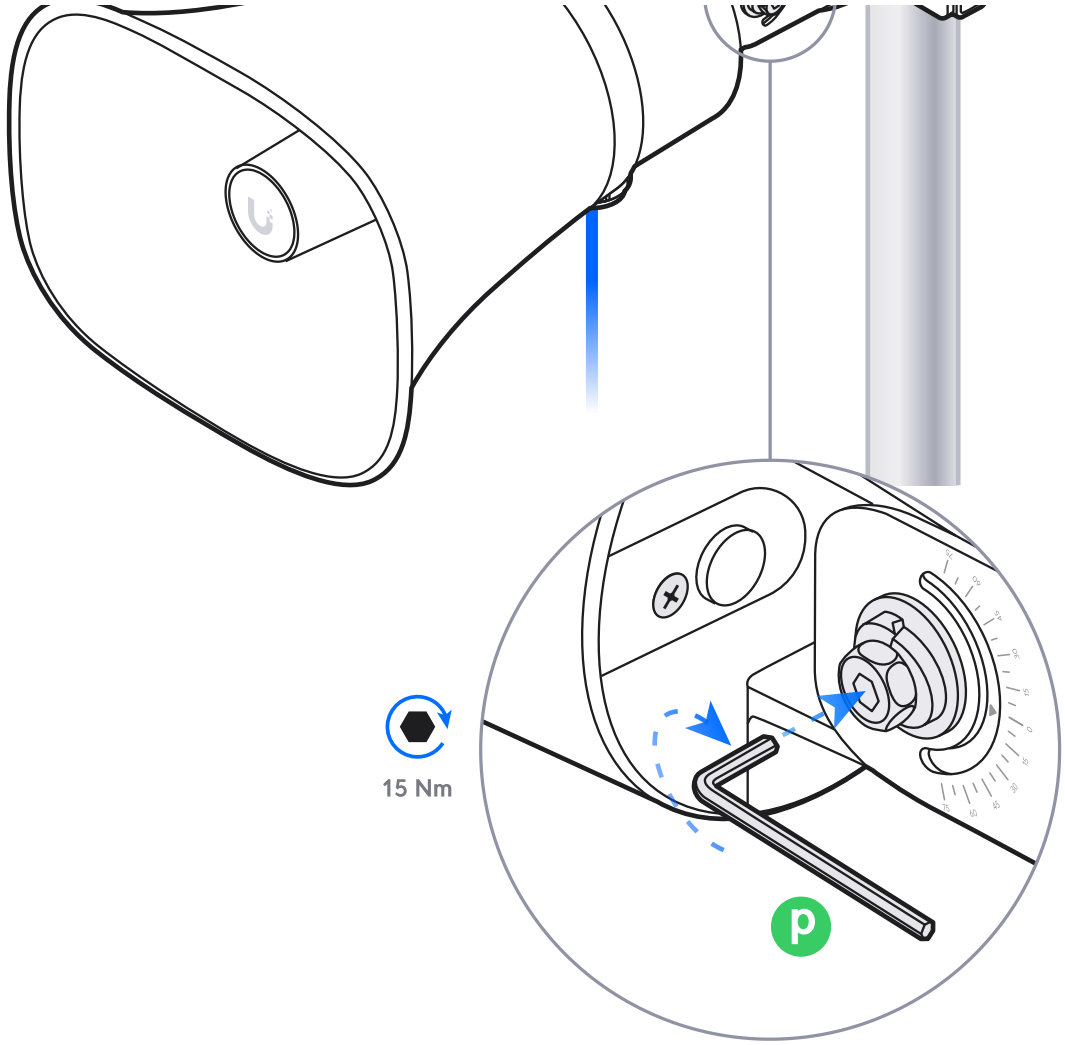

1

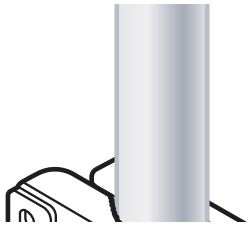

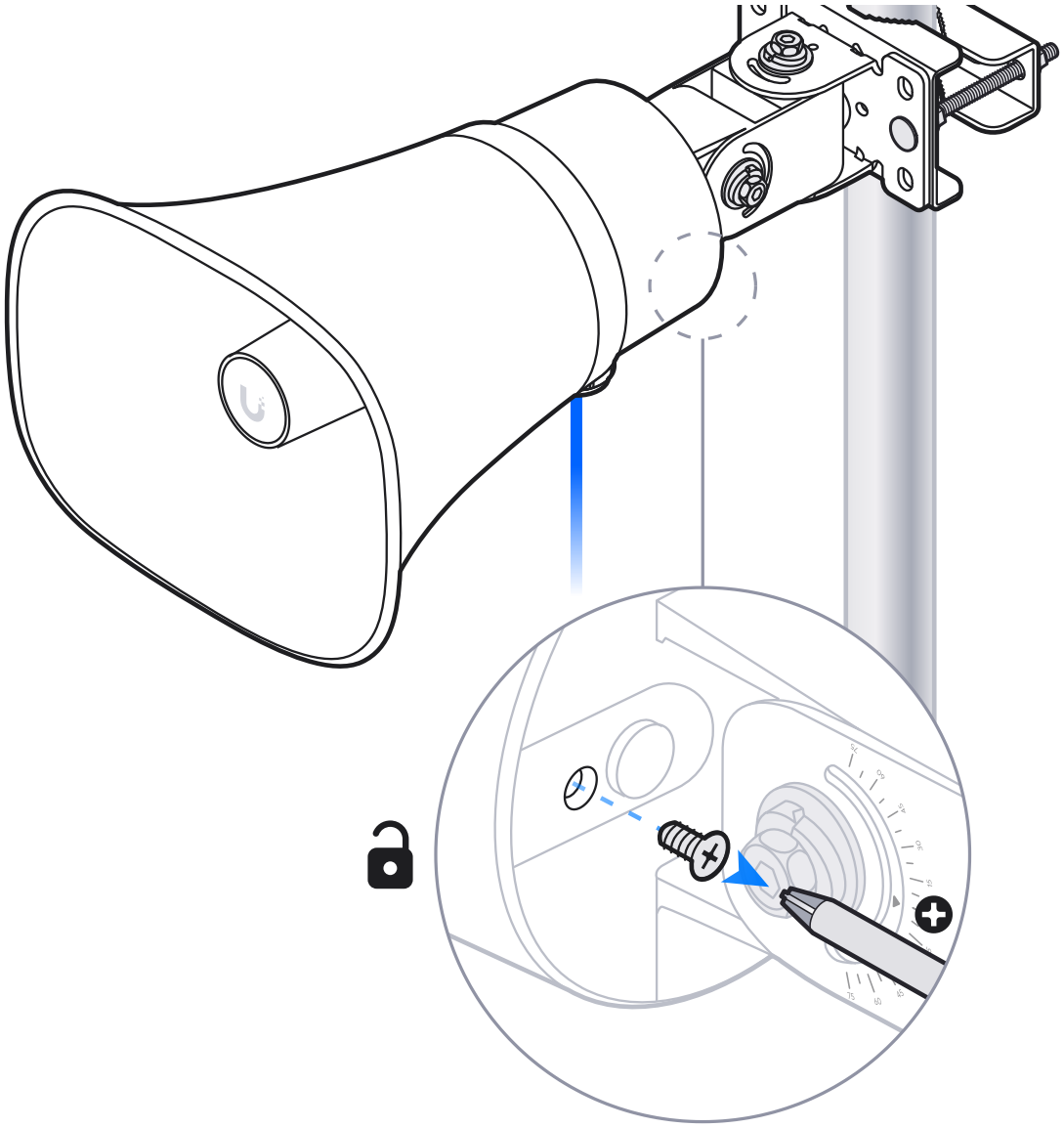

2

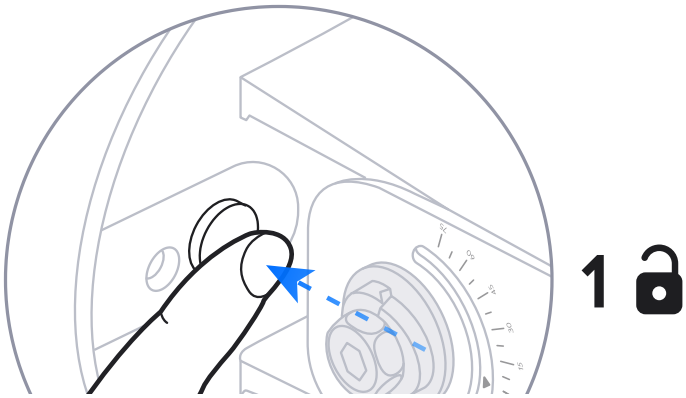

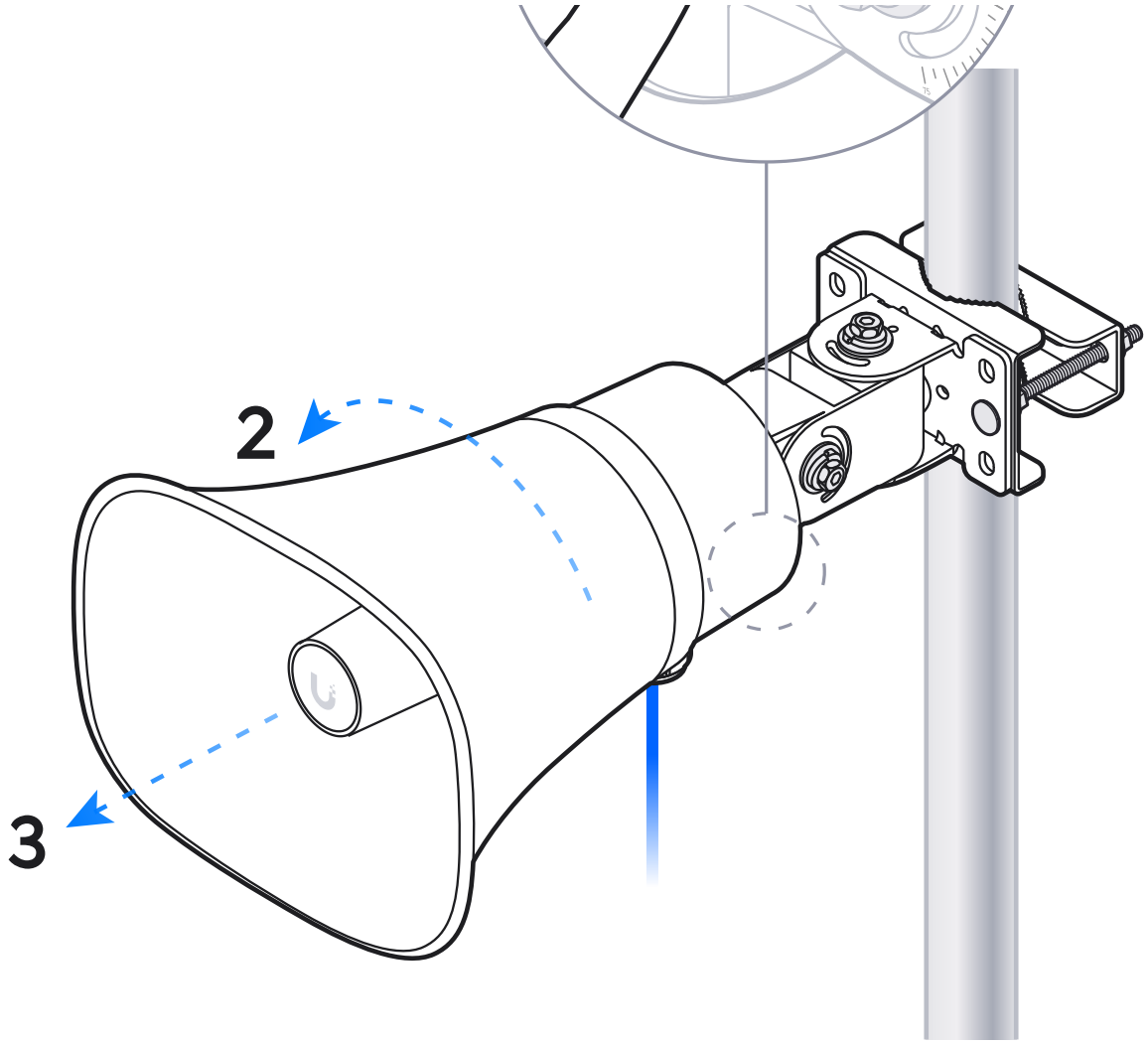

If you need further assistance, visit our Help Center or contact Ubiquiti Support.

©2025 Ubiquiti Inc. All rights reserved. Ubiquiti, the Ubiquiti U logo, UniFi Protect, UniFi and CloudKey are trademarks or registered trademarks of Ubiquiti Inc. in the United States and in other countries. Apple and the Apple logo are trademarks of Apple Inc., registered in the U.S. and other countries. App Store is a service mark of Apple Inc., registered in the U.S. and other countries. Android, Google, Google Play, the Google Play logo are trademarks of Google LLC.