Connect Display

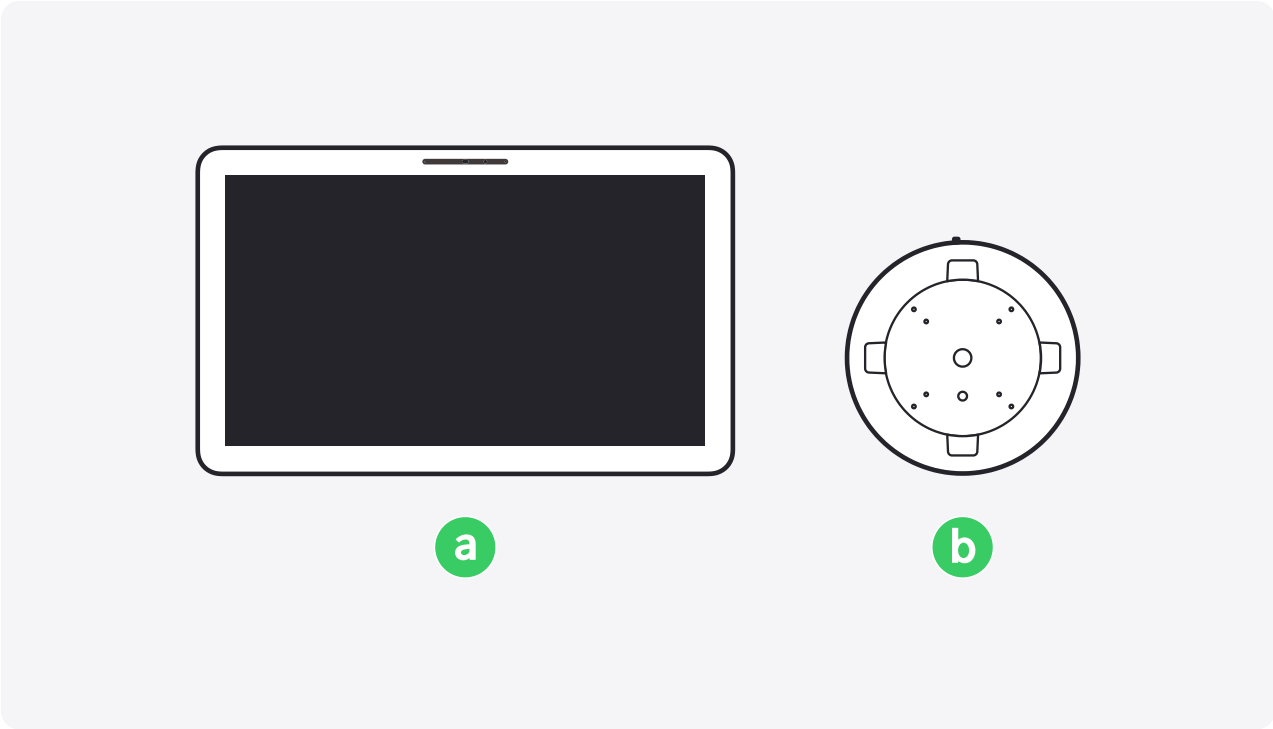
a
b

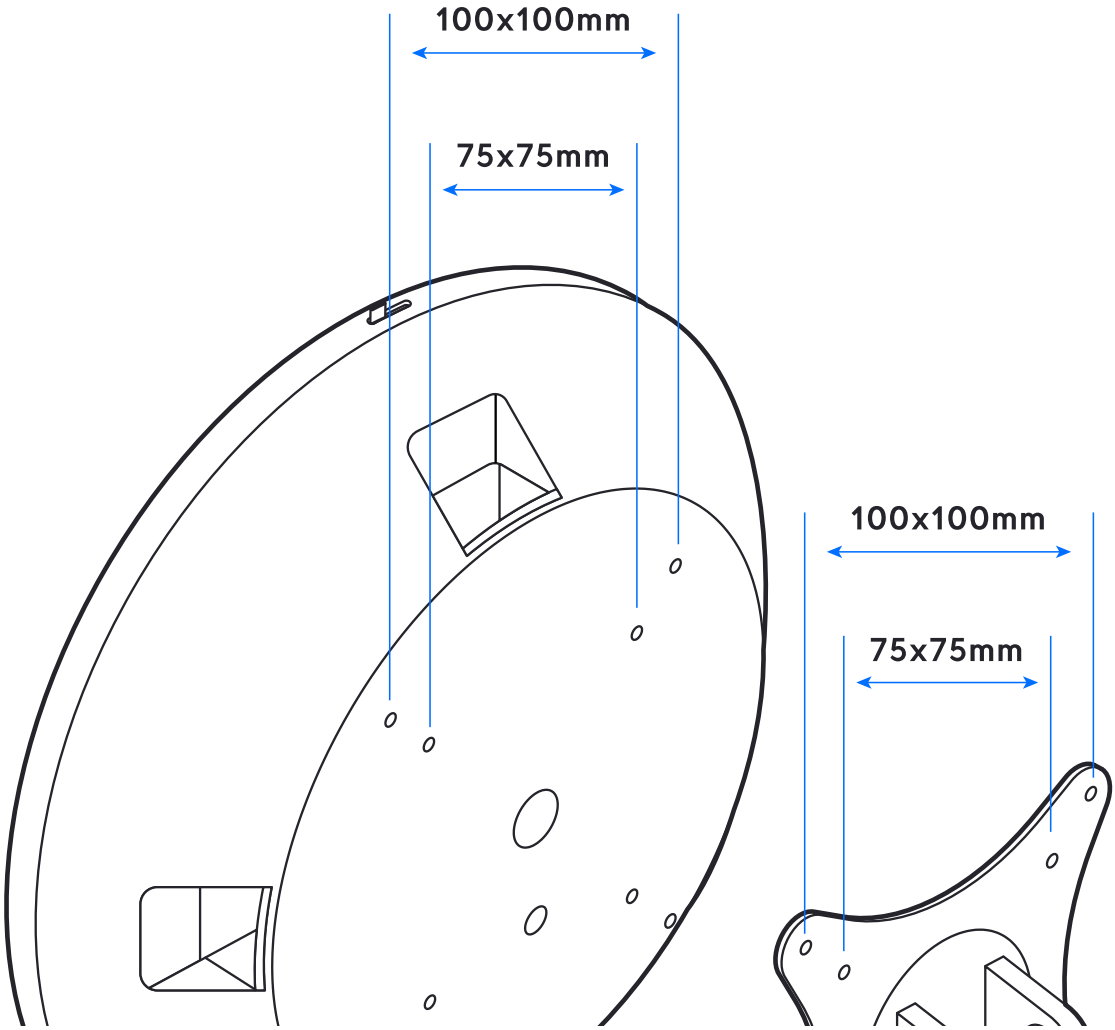
100x100mm
75x75mm
100x100mm
75x75mm

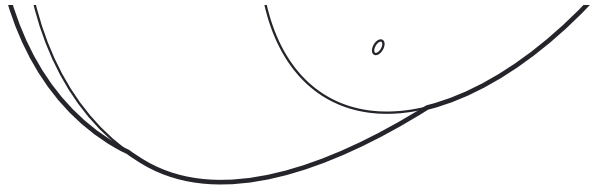

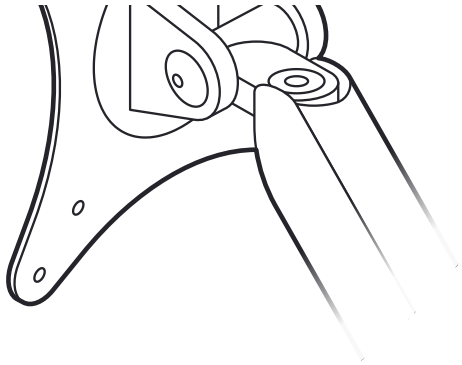

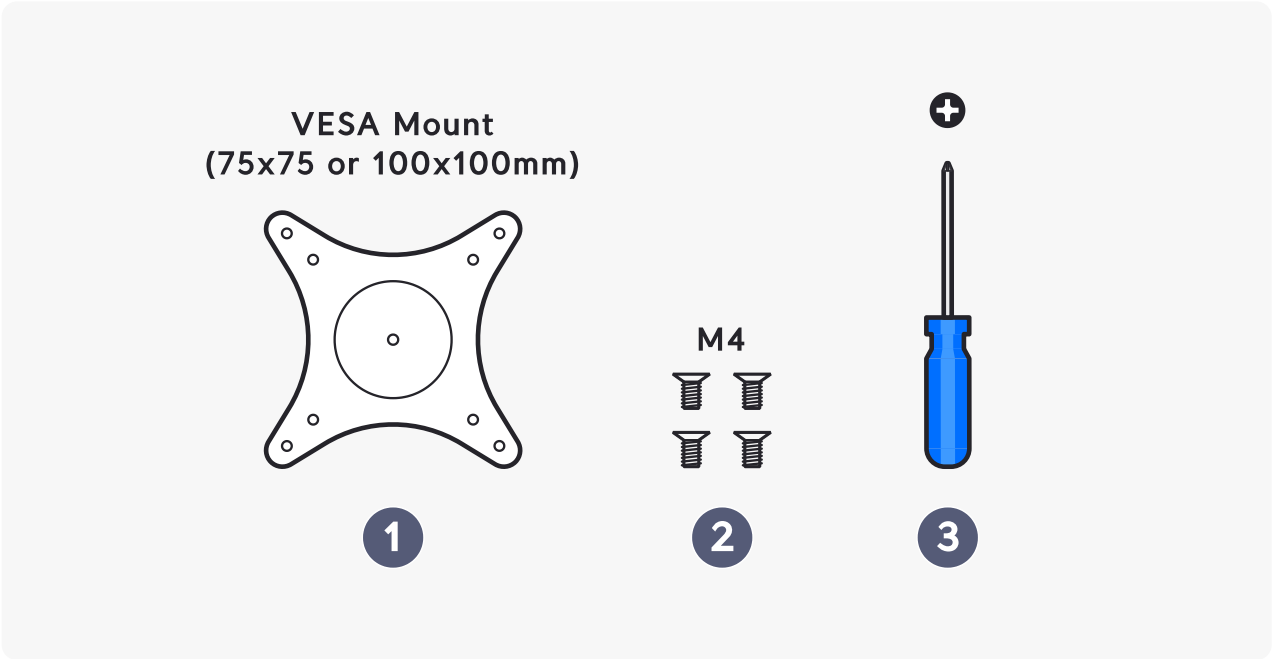

1

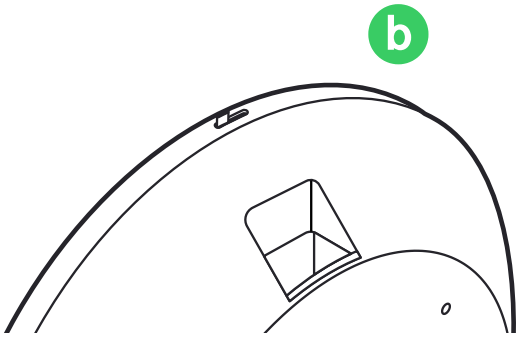

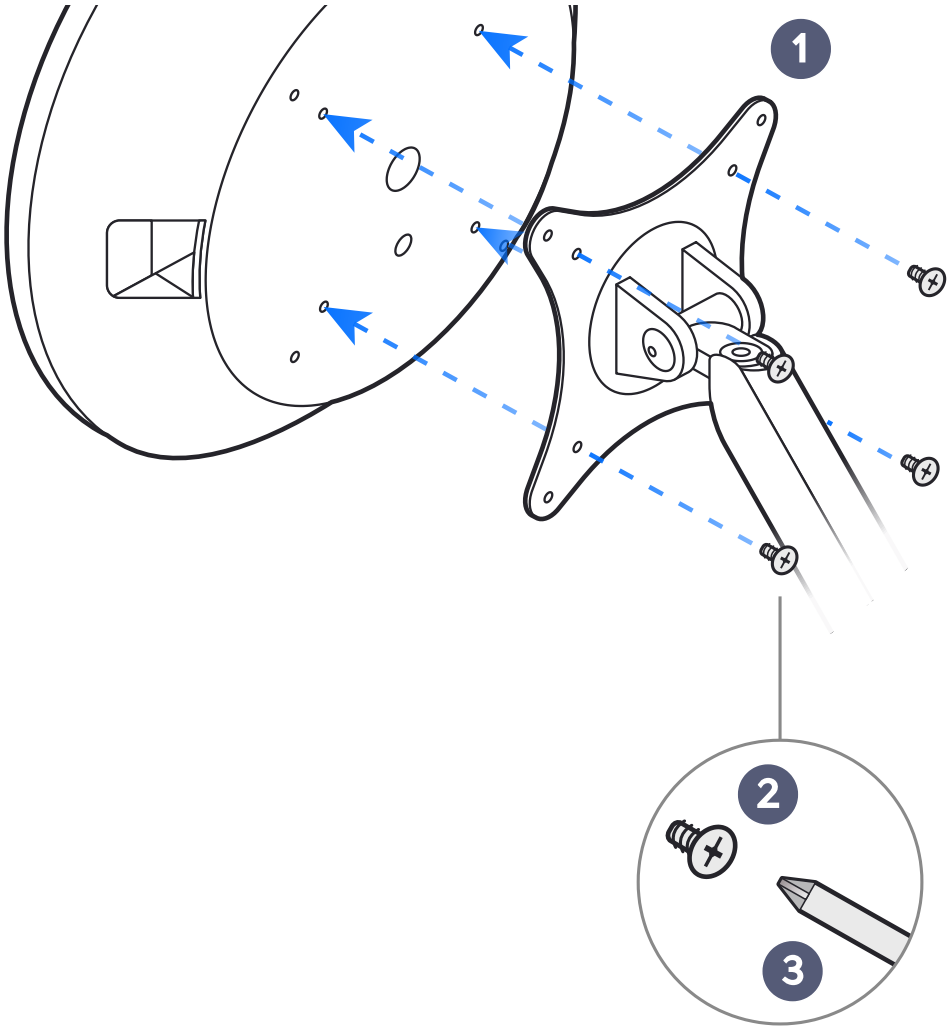

2

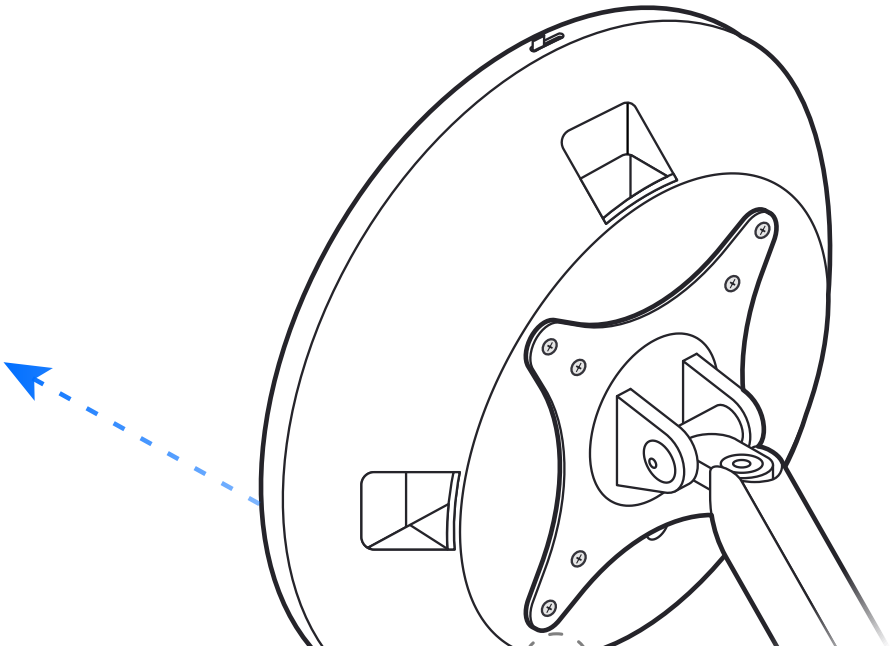

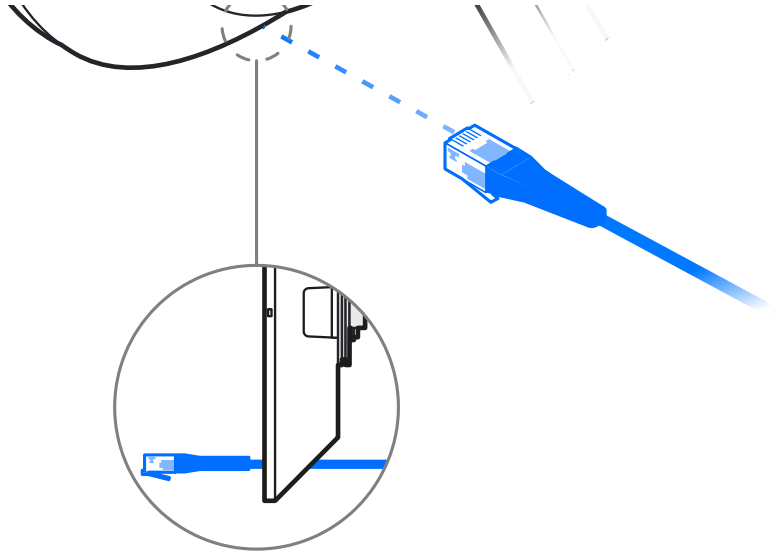

3

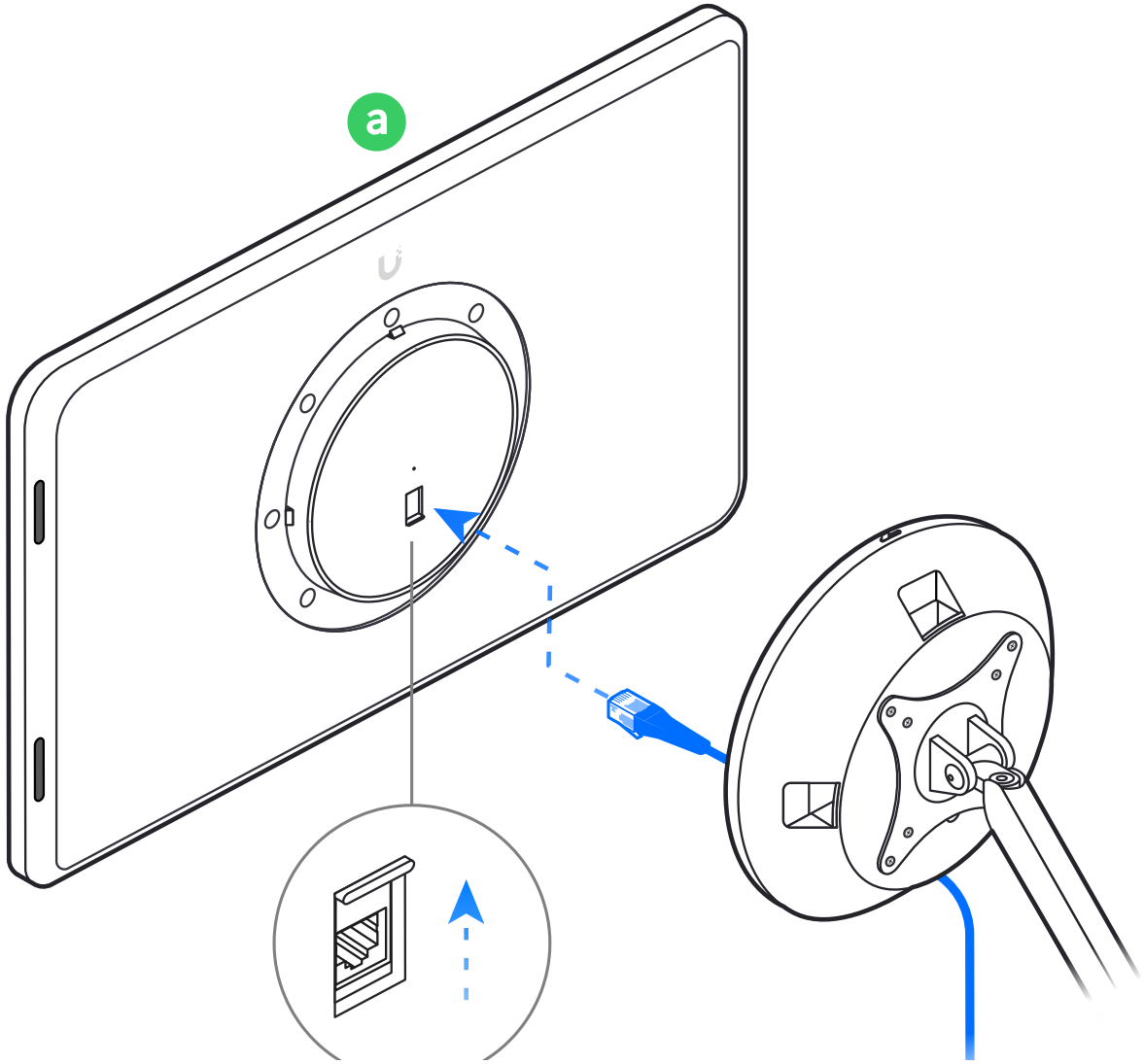

4

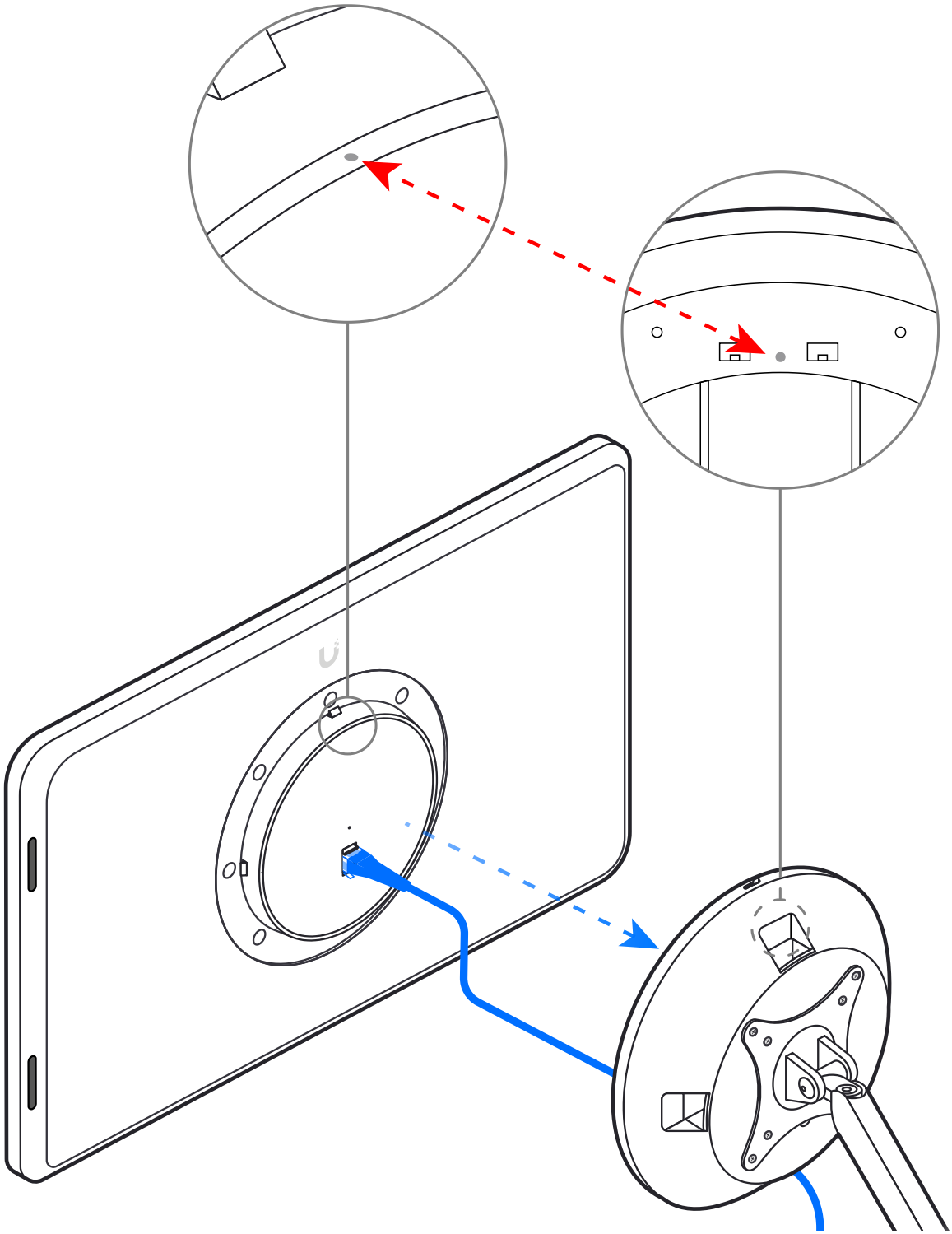

5

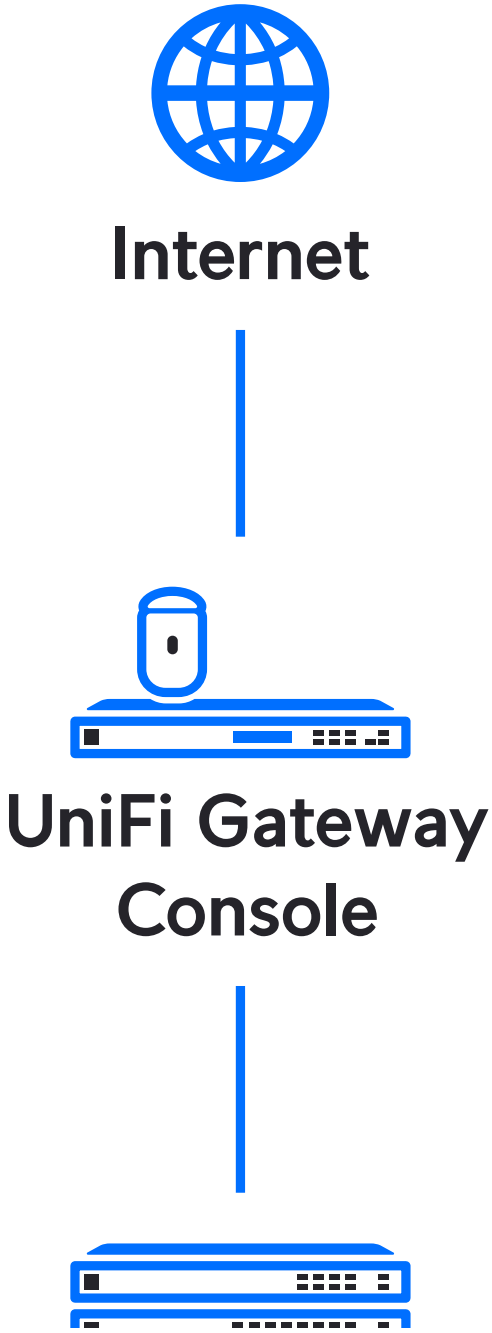

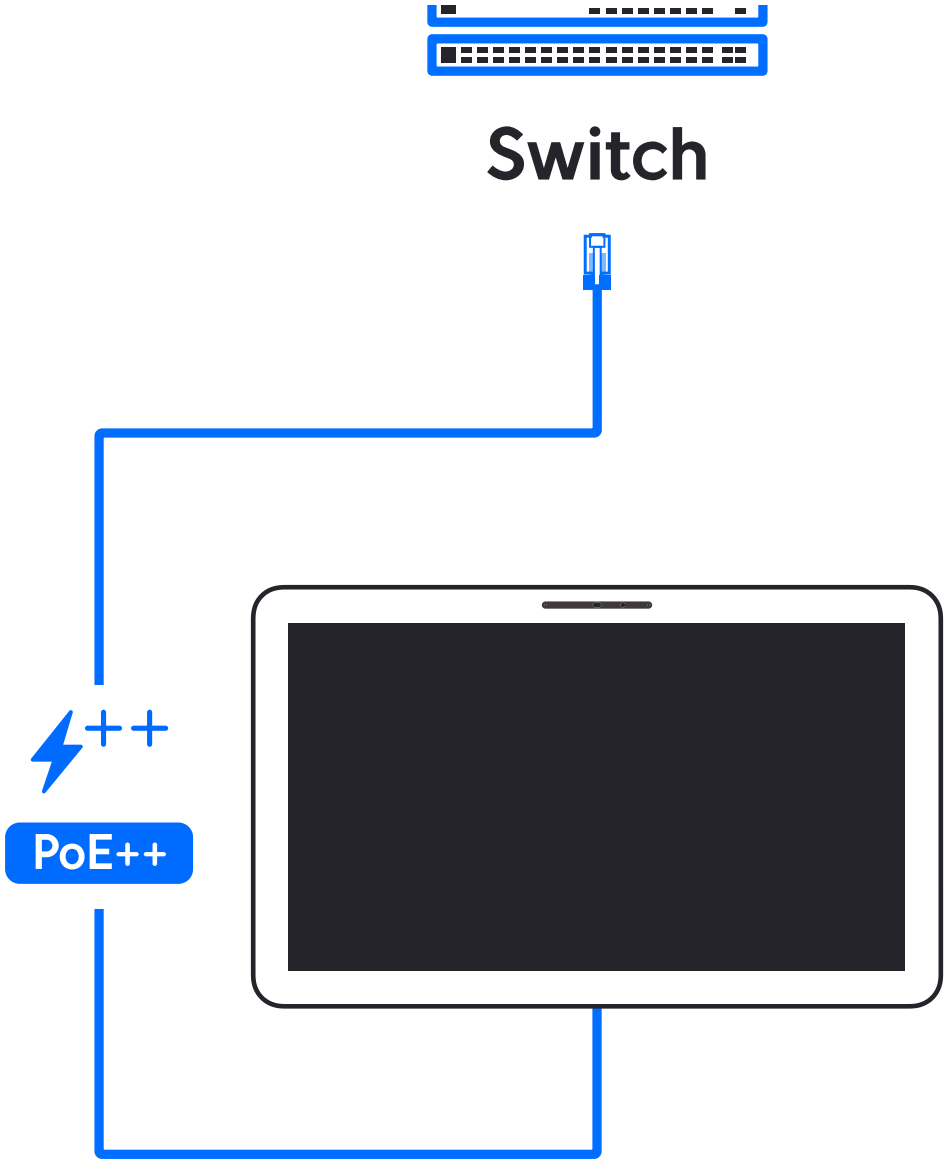

6

Download on the App Store

GET IT ON Google Play

1

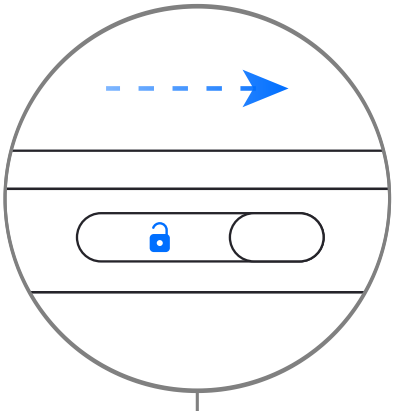

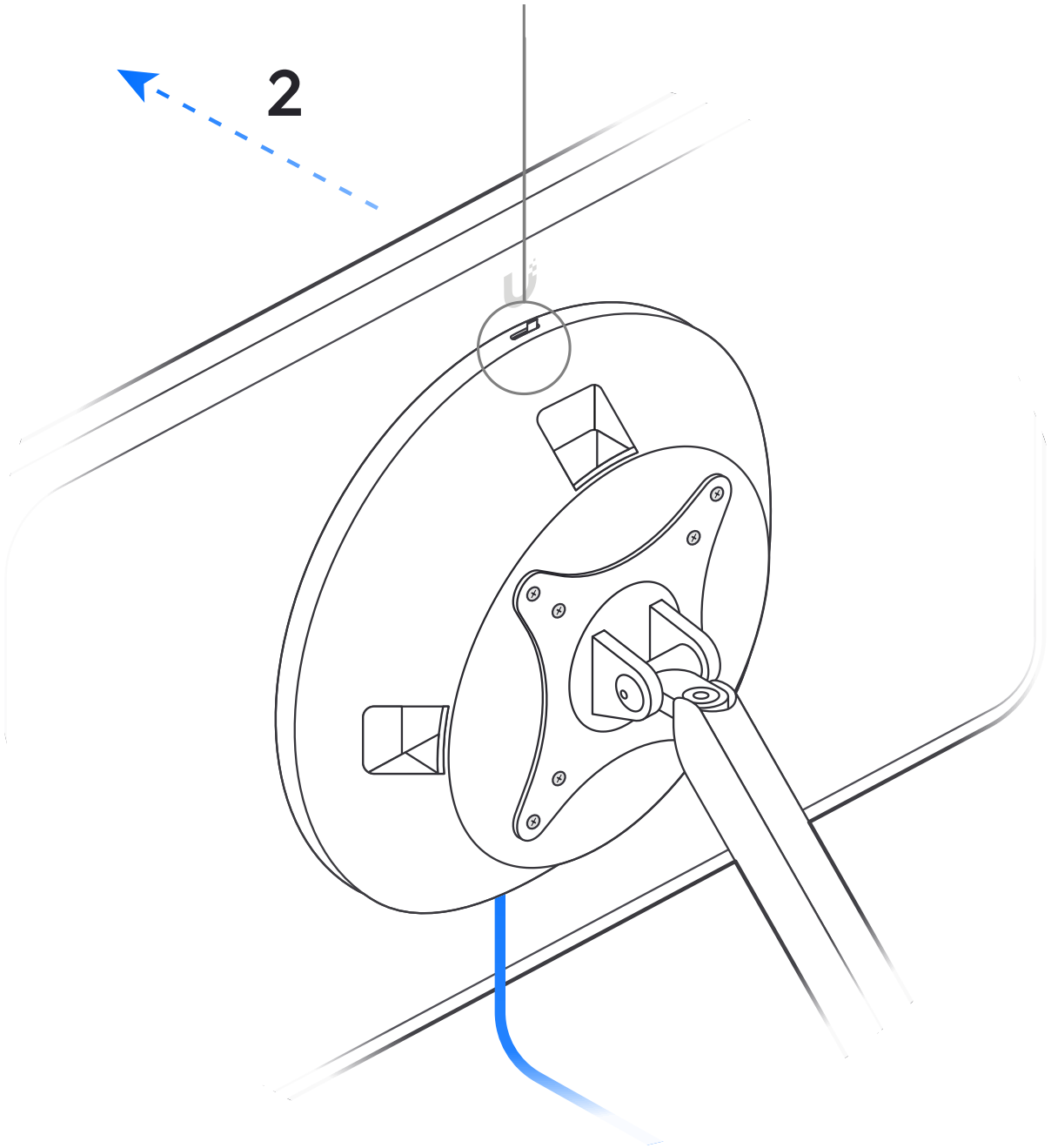

Display Table Stand

Display Arm Mount

Buy ›

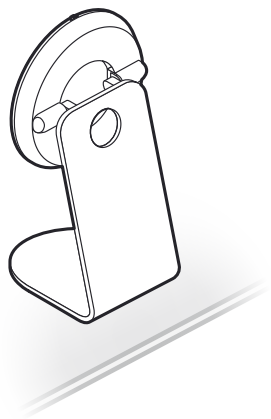

Buy ›

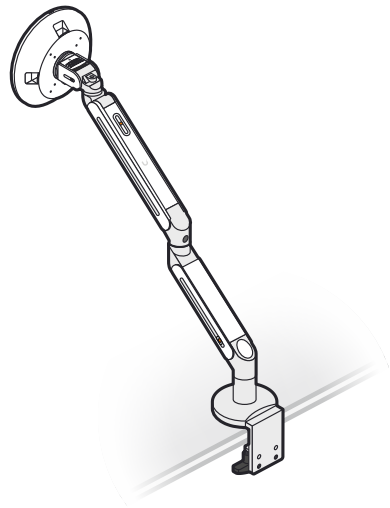

Display Flush Mount

Buy ›

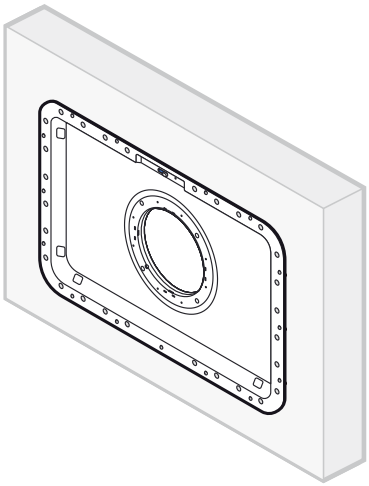

Display Surface Mount

Buy ›

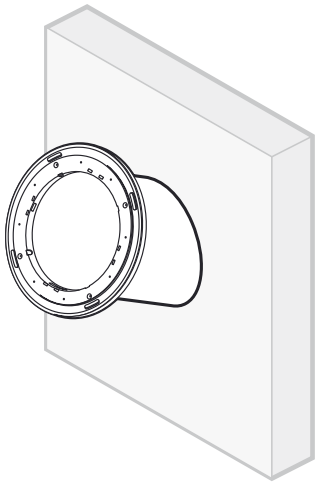

If you need further assistance, visit our Help Center or contact Ubiquiti Support.

©2022 Ubiquiti Inc. All rights reserved. Ubiquiti, Ubiquiti Networks, the Ubiquiti U logo, UniFi, and UniFi Connect are trademarks or registered trademarks of Ubiquiti Inc. in the United States and in other countries. All other trademarks are the property of their respective owners.