MIDDLE ATLANTIC®
A brand of legrand®

NEXSYS™

Select Series PDU with RackLink

User Manual

I-00768Rev E

22
PAP

©2026 | Legrand AV Inc. All rights reserved.

Information in this document is subject to change without notice. The AV equipment described in this document is furnished under a license agreement or nondisclosure agreement. The equipment may be used or copied only in accordance with the terms of those agreements. No part of this publication may be reproduced, stored in a retrieval system, or transmitted in any form or any means electronic or mechanical, including photocopying and recording for any purpose other than the purchaser's personal use without the written permission of Legrand AV Inc.

Middle Atlantic is a brand of Legrand AV Inc.

www.legrandav.com | Phone: (866) 977-3901 | Fax: (877) 894-6918 | Email: av.middleatlantic.techsupport@legrand.com

Visit us at www.legrandav.com for firmware updates, specifications, drawings, manuals, technical support information, and more.

Middle Atlantic is a registered trademark of Legrand AV Inc, Inc.

Legrand AV Inc is an ISO 9001 and ISO 14001 Registered Company.

All patents are protected under existing designations. Other patents pending. For more information, refer to the Patents page on the website at https://www.legrandav.com/resources/patents.

All other brand names or marks are used for identification purposes and are trademarks of their respective owners.

Legrand AV Inc. Brands: Connectrac | C2G | Chief | Da-Lite | Luxul | Middle Atlantic | Nuvo | On-Q | Sanus | Vaddio | Vantage | Wiremold

©2026 | Legrand AV Inc, Inc. All rights reserved.

Contents

IMPORTANT SAFETY INSTRUCTIONS - EN vi
INSTRUCTIONS IMPORTANTES SUR LA SÉCURITÉ - FR viii
Regulatory Compliance xi
Conformité Réglementaire xii
Industry Canada (IC) xii
Industrie Canada (IC) xii
Waste Electrical and Electronic Equipment (WEEE) Directive xiii
Directive sur les déchets d'équipements électriques et électroniques (WEEE) xiii
Understanding General Symbols and Terms xiv
Supplied Components and Hardware xiv
- Rackmount Models xv
- Half-Rack Models xv
- Vertical Models xvi
- Compact Models xvii

Required Tools xviii
Introduction 19
Using RackLink Tools, Interfaces, and Applications 19
System Requirements 20
Installing Rackmount Models in an Enclosure 20
Installing Half-Rack Models to Rackrail Bracket in an Enclosure 21
- Installing Vertical Bracket to Fixed Top Holes on Rackrail Bracket for Half-Rack PDUs 21
- Installing Vertical Bracket to Middle Slot on Rackrail Bracket for Half-Rack PDUs 23
- Installing Your Half-Rack PDU to the Vertical Bracket 26

Installing Vertical Models in an Enclosure 27
- Installing the Mounting Clips to Fixed Top Holes on Rackrail Bracket for Vertical PDUs 27
- Installing Mounting Clips to Middle Slot on Rackrail Bracket for Vertical PDUs 29
- Installing Your Vertical PDU to the Mounting Clips 31

Installing Compact Models in an Enclosure 32
- Installing the Mounting Clip to Fixed Top Holes on Rackrail Bracket for Compact PDUs 33
- Installing Mounting Clip to Middle Slot on Rackrail Bracket for Compact PDUs 34
- Installing Your Compact PDU to the Mounting Clip 36

Setting Up Your RackLink Device for the First Time 37
- Configuring TCP/IP on Your Computer 38

©2026 | Legrand AV Inc, Inc. All rights reserved.

Configuring TCP/IP Using the Web Interface 43
Understanding RackLink Model Feature Sets 44
RLNK-215 Feature Set 44
RLNK-210-IEC-NS Feature Set 45
RLNK-415R and RLNK-420R Feature Sets 46
RLNK-410R-IEC-NS Feature Set 47
RLNK-915R and RLNK-920R Feature Sets 48
RLNK-910R-IEC-NS Feature Set 49
RLNK-1015V Feature Set 51
RLNK-1615V Feature Set 52
Using the Web Interface 54
Accessing the Web Interface 54
Understanding System Confirmations 57
Viewing Help Information 59
Viewing and Configuring Information on the Dashboard 59
Initiating a Sequence 60
Configuring Outlet Controls 61
Viewing Status Log Information 66
Configuring Administrator Settings 71
Logging in to the Administrator Settings Menu 72
Understanding the RackLink Cloud Service 73
RackLink Cloud Network Requirements 73
Enabling, Registering, and Claiming Your Device in the Cloud 74
Configuring Date/Time Settings 83
Configuring Device Settings 85
Configuring Email Settings 86
Restoring Factory Defaults 90
Updating Device Firmware 92
Configuring Network Settings 95
Configuring Passwords 99
Downloading and Using the RackLink Device Discovery Tool 102
Installing the RackLink Device Discovery Tool Software on a Windows PC 104
Installing the RackLink Device Discovery Tool Software on a Mac 106

©2026 | Legrand AV Inc, Inc. All rights reserved.

Installing the RackLink Device Discovery Tool Software on Linux 108
Downloading and Using the Mobile App 109
Troubleshooting 111
Warranty 115

©2026 | Legrand AV Inc, Inc. All rights reserved.

IMPORTANT SAFETY INSTRUCTIONS - EN

SAVE THESE INSTRUCTIONS - This manual contains important instructions that should be followed during installation and maintenance of the product.

- Only use attachments and accessories specified by the manufacturer.
- Read all instructions before using the product.

Understanding Safety Symbols

	DANGER HAZARDOUS VOLTAGE	The lightning flash with the arrowhead symbol, within an equilateral triangle is intended to alert the user to the presence of uninsulated dangerous voltage within the product's enclosure that may be of sufficient magnitude to constitute a risk of electric shock to persons.
	WARNING	A warning alerts you to a situation that could result in serious personal injury or death.
	CAUTION	A caution alerts you to a situation that may result in minor personal injury or damage to the product and/or property.
	NOTE	A note is used to highlight procedures pertaining to the installation, operation, or maintenance of the product.
	REMINDER	A reminder marks information which may be of importance to you for recalling in context and/or later use.
	TIP	A tip helps users apply techniques and procedures for their specific needs. The information suggests alternative methods that may not be obvious and help users understand the benefits and capabilities of the product. A tip is not essential to the basic understanding of the material.

	DANGER HAZARDOUS VOLTAGE	To reduce the risk of electrical shock, always unplug this device from the electrical outlet before cleaning.
	WARNING	Failure to read, understand and follow the following information can result in serious personal injury, damage to the equipment or voiding of the warranty. It is the responsibility of the Installer/User to ensure that this product is loaded according to specifications.

©2026 | Legrand AV Inc, Inc. All rights reserved.

WARNING

Risk of Electric Shock: Connect the device to a properly grounded outlet only. Do not defeat the safety purpose of the polarized or grounding-type plug. A polarized plug has two blades with one wider than the other. A grounding type plug has two blades and a third grounding prong. The wide blade or the third prong is provided for your safety. If the provided plug does not fit into your outlet, consult an electrician for replacement of the obsolete outlet.

WARNING

The apparatus shall not be exposed to dripping or splashing and that no objects filled with liquids, such as vases, shall be placed on the apparatus.

WARNING

To reduce the risk of burns, fire, electric shock, or injury to persons:

- Unplug from outlet before putting on or taking off parts.
- Close supervision is necessary when this device is used by, or near children, invalids, or disabled persons.
- Use this device only for its intended use as described in these instructions. Do not use attachments not recommended by the manufacturer.
- Never operate the device if it has a damaged cord or plug, if it is not working properly, if it has been dropped or damaged, or dropped into water. Return the device to a service center for examination and repair.
- Protect the power cord from being walked on or pinched particularly at plugs, convenience receptacles, and the point where they exit from the apparatus.
- Keep the cord away from heated surfaces.
- Never drop or insert any object into any opening.
- Do not use outdoors.
- Do not operate where aerosol (spray) products are being used or where oxygen is being administered.
- To disconnect, turn all controls to the off position, then remove plug from outlet.

CAUTION

All electrical installation must be done according to national and local electrical code.

Safety Instructions: Rack Mount

Elevated Operating Ambient: If installed in a closed or multi-unit rack assembly, the operating ambient temperature of the rack environment may be greater than room ambient. Therefore, consideration should be given to installing the equipment in an environment compatible with the maximum ambient temperature (Tma) specified by the manufacturer.

Reduced Air Flow: Installation of the equipment in a rack should be such that the amount of air flow required for safe operation of the equipment is not compromised.

Mechanical Loading: Mounting of the equipment in the rack should be such that a hazardous condition is not achieved due to uneven mechanical loading.

Circuit Overloading: Consideration should be given to the connection of the equipment to the supply circuit and the effect that overloading of the circuit might have on overcurrent protection and supply wiring. Appropriate consideration of equipment nameplate ratings should be used when addressing this concern.

©2026 | Legrand AV Inc, Inc. All rights reserved.

Reliable Earthing: Reliable earthing of rack-mounting equipment should be maintained. Particular attention should be given to supply connections other than direct connections to the branch circuit (e.g. use of power strips).

Disconnect Device (Pluggable Equipment): The socket-outlet shall be installed near the equipment and shall be easily accessible.

When using electrical products, basic precautions should always be followed, including the following:

- Read and follow all instructions before using.
- There are no user-serviceable components within this device. Removal of the cover from this device may present a shock hazard, and void the warranty.
- The mains plug is used as your disconnect device. This device shall remain readily operable.
- Unplug this apparatus during lightning storms or when unused for long periods of time.
- Do not overload the wall outlet where this device is being connected. Do not overload this device. Ensure the total load to this device does not exceed that which is listed in the specifications section of this manual.
- Ensure this device is connected to a properly grounded AC power source. Ensure the device is plugged into a source providing the required 120V. Do not use a plug adapter that defeats the ground pin of the AC plug.

INSTRUCTIONS IMPORTANTES SUR LA SÉCURITÉ - FR

CONSERVER CES INSTRUCTIONS - Ce manuel contient des instructions importantes qui doivent être suivies lors de l’installation et de la maintenance de l’onduleur et des batteries.

- Utiliser uniquement les accessoires spécifiés par le fabricant.
- Lisez toutes les instructions avant d’utiliser le produit.

Comprendre Les Symboles De Sécurité

	DANGER TENSION DANGEREUSE	Le symbole de la pointe de flèche, dans un triangle équilatéral, est destiné à alerter l'utilisateur sur la présence de tension dangereuse non isolée dans l'enceinte du produit qui peut être d'une ampleur suffisante pour constituer un risque d'électrocution.
	AVERTISSEMENT	Un avertissement vous avertit d'une situation pouvant entraîner des blessures graves ou la mort.
	ATTENTION	Une attention vous avertit d'une situation pouvant entraîner des blessures mineures ou des dommages au produit et/ou à la propriété.
	REMARQUE	Une remarque est utilisée pour mettre en évidence les procédures relatives à l'installation, au fonctionnement ou à l'entretien du produit.

©2026 | Legrand AV Inc, Inc. All rights reserved.

RAPPEL	Un rappel indique quelles informations peuvent être importantes pour vous pour le contexte et/ou l’utilisation ultérieure.
CONSEIL	Un conseil aide les utilisateurs à appliquer des techniques et des procédures pour leurs besoins spécifiques. Les informations suggèrent des méthodes alternatives qui peuvent ne pas être évidentes et aider les utilisateurs à comprendre les avantages et les capacités du produit. Une astuce n’est pas essentielle à la compréhension de base du matériel.

DANGER TENSION DANGEREUSE	Pour réduire le risque de choc électrique: Toujours débrancher le meuble de la prise électrique avant de le nettoyer.
AVERTISSEMENT	Ne pas lire, comprendre et suivre les informations suivantes peut entraîner des blessures graves, des dommages à l'équipement ou de la nullité de la garantie. Il incombe à l'installateur/utilisateur de s'assurer que ce produit est chargé conformément aux spécifications.
AVERTISSEMENT	Risque de choc électrique: Brancher le meuble uniquement à une prise correctement mise à la terre. Ne pas détériorer le dispositif de sécurité de la fiche polarisée ou de la fiche de terre. Une fiche polarisée possède deux broches, dont l'une plus large que l'autre. Une fiche de type terre possède deux broches et une troisième de mise à la terre. La broche large ou la troisième fiche sont fournies pour des raisons de sécurité. Si la fiche fournie n'entre pas dans votre prise de courant, veuillez faire appel à un électricien pour remplacer la prise obsolète.
AVERTISSEMENT	L'appareil ne doit pas être exposé à des éclaboussures et aucun objet rempli de liquide, comme des vases, ne doit être placé sur l'appareil.

©2026 | Legrand AV Inc, Inc. All rights reserved.

AVERTISSEMENT

Pour réduire les risques de brûlures, d'incendie, de choc électrique ou de blessures:

- Débrancher de la prise électrique avant d'installer ou de retirer des pièces.
- Surveiller étroitement ce meuble s'il est utilisé par ou à proximité d'un enfant, d'une personne invalide ou handicapée.
- N'utiliser ce meuble que pour l'usage auquel il est destiné, tel que décrit dans la présente fiche d'instructions. Ne pas utiliser d'accessoires non recommandés par le fabricant.
- Ne jamais utiliser ce meuble si le cordon ou la prise est endommagé, s'il ne fonctionne pas correctement, s'il est tombé ou est endommagé, ou s'il est tombé dans l'eau. Renvoyer le meuble à un centre de service après-vente pour qu'il soit examiné et réparé.
- Le cordon d'alimentation doit être placé de manière à éviter qu'il soit piétiné ou pincé, notamment au niveau des prises, des réceptacles et à la sortie de l'appareil.
- Garder le cordon d'alimentation loin des surfaces chauffées.
- Ne jamais faire tomber ou introduire un objet dans une ouverture.
- Ne pas utiliser en extérieur.
- Ne pas utiliser dans des lieux où des produits aérosols sont utilisés ou à proximité d'une source d'oxygène.
- Pour débrancher, placer tous les boutons en position off, puis retirer la fiche de la prise électrique.

ATTENTION Toute installation électrique doit être effectuée conformément aux codes électriques nationaux et locaux.

Consignes de sécurité: montage en rack

Température de fonctionnement élevée: Si installé dans un rack fermé ou à unités multiples , la température ambiante de fonctionnement de l'environnement du rack peut être supérieure à ambiante de la pièce. Par conséquent, il faudrait envisager d'installer l'équipement dans un environnement compatible avec la température ambiante maximale (Tma) spécifiée par le constructeur.

Réduction Air accréditives: Installation de l'équipement dans un rack doit être telle que la quantité de flux d'air nécessaire au bon fonctionnement de l'équipement ne soit pas compromise.

Chargement mécanique: Le montage de l'équipement dans le rack doit être telle qu'une condition dangereuse ne lié à un chargement mécanique irrégulier.

Surcharge des circuits: Il faudrait envisager à la connexion de l'équipement au circuit d'alimentation et l' effet que la surcharge du circuit pourrait avoir sur la protection contre les surintensités et le câblage d'alimentation. Examen approprié des équipements évaluations de la plaque signalétique doit être utilisée pour traiter de cette préoccupation.

Mise à la terre fiable: Fiable mise à la terre de l'équipement de montage en rack doit être maintenue. Une attention particulière devrait être accordée aux connexions d'alimentation autres que les connexions directes vers le circuit de dérivation (par exemple de l'utilisation de bandes de puissance).

Appareil Disconnect (Équipement Pluggable): La prise de courant doit être installée à proximité du matériel et doit être facilement accessible.

©2026 | Legrand AV Inc, Inc. All rights reserved.

Lors de l'utilisation des produits électriques, des précautions de base doivent toujours être respectées, y compris les suivantes:

- Lire et suivre toutes les instructions avant l'utilisation du matériel.
- Les composants de cet appareil ne pas réparés par l'utilisateur. Le retrait du capot de cet appareil peut provoquer un choc électrique et annuler la garantie.
- La fiche secteur est utilisée comme sectionneur de courant. Ce dispositif doit rester en état de marche.
- Débrancher cet appareil pendant les orages ou s'il n'est pas utilisé pendant de longues périodes.
- Ne surchargez pas le réceptacle de mur ou le circuit qui fournit l'énergie à ce appareil. Ne pas surcharger cette appareil. S'assurer que la charge totale à cet appareil ne dépasse pas celle qui est répertoriée dans la section desspécifictions de ce manuel.
- Assurez-vous cet appareil est connecté à une source d'alimentation C/A avecmise à la terre. Assurez-vous cet appareil est branché
- sur une sourced'alimentation fournissant les nécessaires 120V. Ne pas utiliser un adaptateurqui contrecarre la broche de terre de la prise du cordon d'alimentation.

Regulatory Compliance

Federal Communications Commission (FCC) Statement

CAUTION Any changes or modifications not expressly approved by the party responsible for compliance could void the user's authority to operate the equipment.

NOTE This equipment has been tested and found to comply with the limits for a Class B digital device, pursuant to part 15 of the FCC Rules. These limits are designed to provide reasonable protection against harmful interference in a residential installation. This equipment generates, uses and can radiate radio frequency energy and, if not installed and used in accordance with the instructions, may cause harmful interference to radio communications. However, there is no guarantee that interference will not occur in a particular installation. If this equipment does cause harmful interference to radio or television reception, which can be determined by turning the equipment off and on, the user is encouraged to try to correct the interference by one or more of the following measures:

- Reorient or relocate the receiving antenna.
- Increase the separation between the equipment and receiver.
- Connect the equipment into an outlet on a circuit different from that to which the receiver is connected.
- Consult the dealer or an experienced radio/TV technician for help.

©2026 | Legrand AV Inc, Inc. All rights reserved.

Conformité Réglementaire

Déclaration de conformité de la Federal Communications Commission (FCC)

ATTENTION Les changements ou modifications non expressément approuvés par le fabricant peuvent annuler le droit de l'utilisateur à utiliser l'équipement.

REMARQUE Cet équipement a été testé et jugé conforme aux limites d' un dispositif numérique de classe B, conformément à la partie 15 des règles de la FCC. Ces limites sont conçues pour fournir une protection raisonnable contre les interférences nuisibles dans une installation résidentielle. Cet équipement génère, utilise et peut émettre de l'énergie radiofréquence et, si non installé et utilisé conformément aux instructions, peut provoquer des interférences dans les communications radio. Cependant, il n'y a aucune garantie que des interférences ne se produiront pas dans une installation particulière. Si cet équipement provoque des interférences nuisibles à la réception radio ou de télévision, ce qui peut être déterminé en allumant et éteignant l'équipement, l'utilisateur est encouragé à essayer de corriger l'interférence par une ou plusieurs des mesures suivantes:

- Réorienter ou déplacer l' antenne de réception.
- Augmenter La distance entre l'équipement et le récepteur.
- Brancher l'équipement dans une prise sur un circuit différent de celui sur lequel est branché le récepteur.
- Consulter le revendeur ou un technicien radio/TV expérimenté.

Industry Canada (IC)

ICES-003 Class B Notice. This Class B digital apparatus complies with Canadian ICES-003.

Industrie Canada (IC)

ICES-003 Avis NMB-003, Classe B. Cet appareil numérique de la classe B est conforme à la norme NMB-003 du Canada.

©2026 | Legrand AV Inc, Inc. All rights reserved.

Waste Electrical and Electronic Equipment (WEEE) Directive

Correct disposal of this product: This symbol indicates that this product must not be disposed of with household waste, according to the WEEE Directive (2012/19/EU) and your national law. This product should be taken to a collection center licensed for the recycling of waste electrical and electronic equipment (EEE). The mishandling of this type of waste could have a possible negative impact on the environment and human health due to potentially hazardous substances that are generally associated with EEE. At the same time, your cooperation in the correct disposal of this product will contribute to the efficient use of natural resources. For more information about where you can take your waste equipment for recycling, please contact your local city office or your household waste collection service.

Directive sur les déchets d'équipements électriques et électroniques (WEEE)

Elimination correcte de ce produit: Ce symbole indique que ce produit ne doit pas être éliminé avec les ordures ménagères, conformément à la directive WEEE (2012/19/EU) et à votre législation nationale. Ce produit doit être déposé dans un centre de collecte agréé pour le recyclage des déchets d'équipements électriques et électroniques (EEE). La mauvaise manipulation de ce type de déchets pourrait avoir un impact négatif possible sur l'environnement et la santé humaine en raison de substances potentiellement dangereuses généralement associées aux EEE. Dans le même temps, votre coopération dans l'élimination correcte de ce produit contribuera à une utilisation efficace des ressources naturelles. Pour plus d'informations sur les lieux de recyclage de vos équipements usagés, veuillez contacter votre mairie ou votre service de collecte des ordures ménagères.

©2026 | Legrand AV Inc, Inc. All rights reserved.

Understanding General Symbols and Terms

NOTE	A note highlights procedures pertaining to the installation, operation, or maintenance of the product.
REMINDER	A reminder marks information which may be of importance to you for recalling in context and later use.
TIP	A tip helps users apply techniques and procedures for their specific needs. The information suggests alternative methods that may not be obvious and help users understand the benefits and capabilities of the product. A tip is not essential to the basic understanding of the material.

Supplied Components and Hardware

After carefully opening all product packaging, identify the supplied components and hardware shown. If any pieces are missing or damaged, please report it immediately to Technical Support at av.middleatlantic.techsupport@legrand.com or (866) 977-3901. Keep the original packaging in a safe place for future use.

Power Distribution Unit (PDU)

NOTE: Form factor and outlet type vary based on model purchased. For data about your specific model, see the following note.

A

NOTE

- Rackmount models refer to RLNK-915R, RLNK-920R, and RLNK-910R-IEC-NS, products.
- Half-Rack models refer to RLNK-415R, RLNK-420R, RLNK-410R-IEC-NS products.
- Vertical models refer to RLNK-1015V and RLNK-1615V products.
- Compact models refer to RLNK-215 and RLNK-210-IEC-NS products.

©2026 | Legrand AV Inc, Inc. All rights reserved.

Rackmount Models

The following items are also included with your PDU.

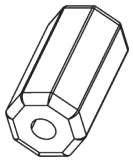

Ferrite

B

Power Cord

NOTE: Cord provided varies based on model purchased.

C

Quick Start Guide

NOTE To order more hardware, contact support at av.middleatlantic.techsupport@legrand.com or (866) 977-3901

Half-Rack Models

The following items are also included with your PDU.

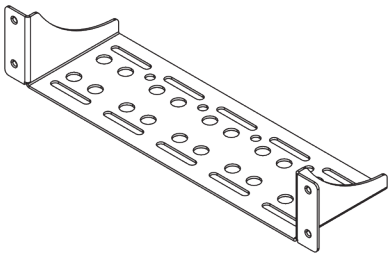

Vertical Bracket

D

(5x)
10-32 x ½” Phillips Screw

E

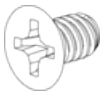

(5x)
10-32 x ⅜” Phillips Screw

F

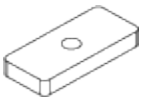

(5x)
10-32 Oval Nut

G

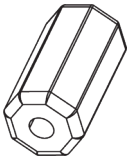

Ferrite

B

©2026 | Legrand AV Inc, Inc. All rights reserved.

Power Cord
NOTE: Cord provided varies based on model purchased.

C

Quick Start Guide

NOTE To order more hardware, contact support at av.middleatlantic.techsupport@legrand.com or (866) 977-3901

Vertical Models

The following items are also included with your PDU.

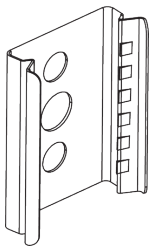

(4x)
Mounting Clip

H

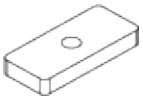

(4x)
10-32 Oval Nut

G

(4x)
10-32 x ½” Phillips Screw

E

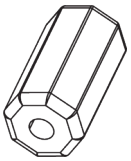

Ferrite

B

Power Cord
NOTE: Cord provided varies based on model purchased.

C

Quick Start Guide

NOTE To order more hardware, contact support at av.middleatlantic.techsupport@legrand.com or (866) 977-3901

©2026 | Legrand AV Inc, Inc. All rights reserved.

Compact Models

The following items are also included with your PDU.

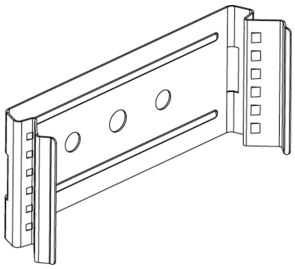

(4x)
Mounting Clip

J

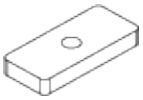

(2x)
10-32 Oval Nut

G

(2x)
10-32 x ½” Phillips Screw

E

(2x)
10-12 Drywall Anchors

K

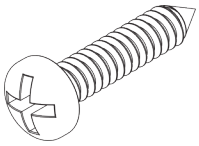

(2x)
#10 x 1” Phillips Screw

L

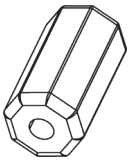

Ferrite

B

Power Cord
NOTE: Cord provided varies based on model purchased.

C

Quick Start Guide

NOTE To order more hardware, contact support at av.middleatlantic.techsupport@legrand.com or (866) 977-3901

©2026 | Legrand AV Inc, Inc. All rights reserved.

Required Tools

- #2 Phillips Screwdriver
- #2 Flat Head Screwdriver
- Electric Drill with Phillips and Flat Bit
- ¼” Drill Bit

WARNING Use tools with caution and follow all safety protocols.

AVERTISSEMENT Utiliser des outils avec prudence et suivre tous les protocoles de sécurité.

©2026 | Legrand AV Inc, Inc. All rights reserved.

Introduction

Thank you for purchasing a Select Series PDU with RackLink™ product - subsequent references as RackLink, device, or PDU (for Power Distribution Unit). This User Manual provides information about your RackLink Select (A), PDU device offered by Middle Atlantic®. You may have purchased additional items (some sold separately) as part of your configuration.

For information about additional products that are part of the Select series, refer to their respective documents available on the Select Series PDU with RackLink product page at www.legrandav.com or contact support at av.middleatlantic.techsupport@legrand.com or (866) 977-3901.

NOTE Images in this manual use different Select Series PDU with RackLink models to show the location of connections, buttons, and lights on LED panels. Unless otherwise noted, the location of these items are similar on all models, and minor appearance variations do not affect the procedures explained.

RackLink simplifies installation and reduces the cost of service and support by providing intelligent power designed for AV systems. With its versatility in the vertical PDU, traditional rackmount, half-rack, and compact form factors, RackLink allows control anywhere it's needed. All form factors are enabled with RackLink technology, creating a system for IP control of power distribution locally or anywhere in the world. This system is a simple, cost effective method for adding intelligent outlet control to applications with basic power distribution. It expands the range of applications and systems that can become IP controlled.

Ensuring system reliability and uptime, it uses intuitive setup and operation, preemptive problem notification and automatic problem resolution. RackLink is also designed to maximize productivity through universal control through local network, third-party control systems, or third-party cloud partners.

Using RackLink Tools, Interfaces, and Applications

Some additional tools, interfaces, and applications for your RackLink device include the Web Interface, the RackLink Cloud Service, the RackLink Discovery Tool, and the Mobile App.

For more information, see the following topics:

- Using the Web Interface, on page 54.
- Understanding the RackLink Cloud Service, on page 73.
- Downloading and Using the RackLink Device Discovery Tool, on page 102.
- Downloading and Using the Mobile App, on page 109.

©2026 | Legrand AV Inc, Inc. All rights reserved.

System Requirements

- Windows® 7 32/64-bit or later with .Net 4.0 Framework or later.
- Macintosh® OS X® 10.8 or later.
- The latest version of Google Chrome™ is recommended.

Installing Rackmount Models in an Enclosure

1. Install the unit in a permanent location considering ease of access and adequate power requirements.
2. Use a #2 Phillips screwdriver and (4x) rack screws (not provided) to attach your Rackmount PDU to the rackrails on your enclosure.
3. Use a shielded Cat5e cable (or better, not provided) to connect the device to your network.
4. Attach the ferrite provided (Part No. 600-01660) as close as possible to the connector going into your device on your shielded Cat 5 cable (not provided).

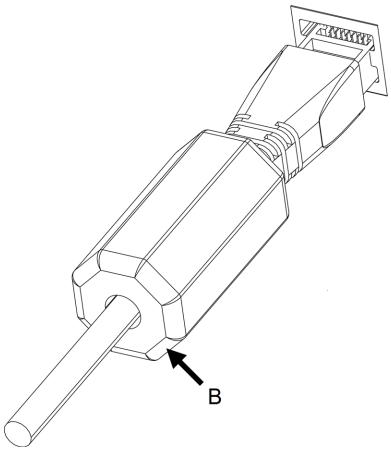

5. Plug power cord into device and a properly grounded AC power source.
6. Press the Power button on the Front Panel. For more information, see Understanding RackLink Model Feature Sets, on page 44.
7. Continue setting up your RackLink device. For more information, see Setting Up Your RackLink Device for the First Time, on page 37.

©2026 | Legrand AV Inc, Inc. All rights reserved.

Installing Half-Rack Models to Rackrail Bracket in an Enclosure

NOTE

- This topic covers typical installations to most rackrail brackets inside of Middle Atlantic enclosures; however, the mounting bracket may also be installed on a Lever Lock™ plate or even a wall, if desired. (Wall mounting hardware not provided.)
- Exact mounting position may vary based on your specific power and cabling installation.

The following sections show how to install your vertical bracket (D) to either the fixed top holes or the middle slot of your rackrail bracket inside of your enclosure. We recommend installing the bracket to your enclosure or other location first, and then installing your Half-Rack PDU (A) to the bracket after.

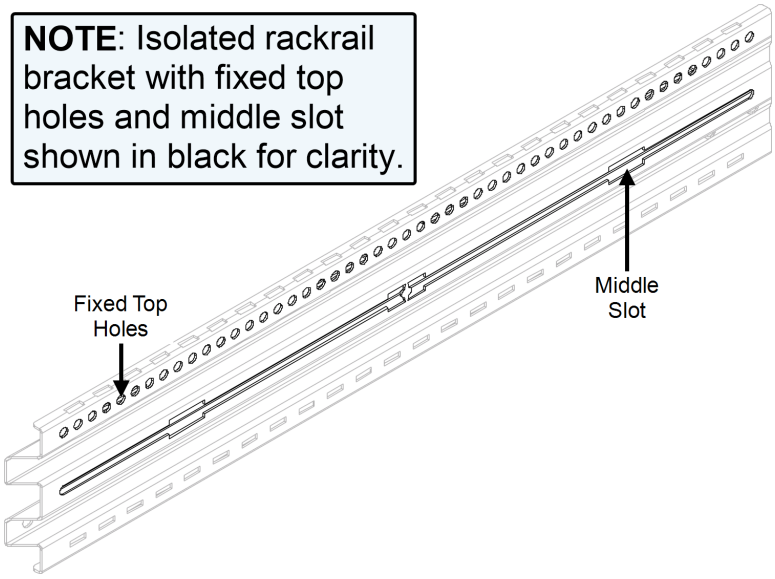

Installing Vertical Bracket to Fixed Top Holes on Rackrail Bracket for Half-Rack PDUs

1. Install the unit in a permanent location considering ease of access and adequate power requirements.

©2026 | Legrand AV Inc, Inc. All rights reserved.

2. Slide an oval nut (G) into the channel behind the fixed top holes on your rackrail bracket as shown.

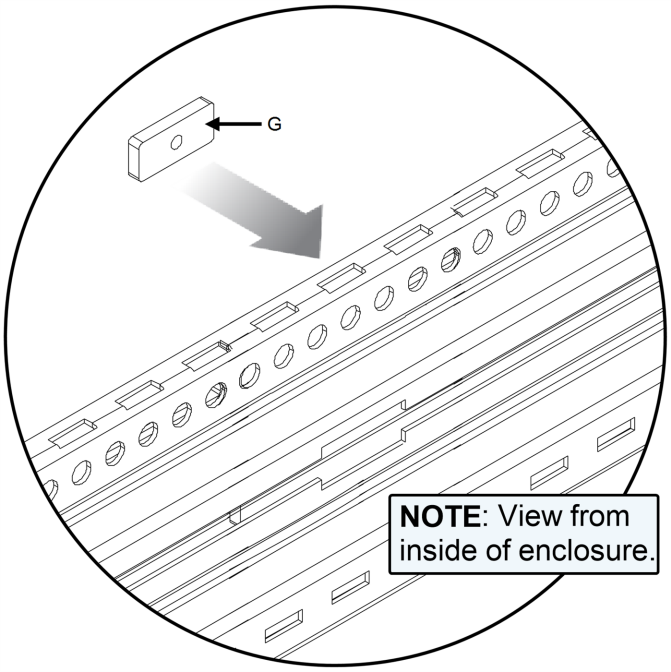

3. Use a #2 Phillips screwdriver and a 10-32 x ½" screw (E) through an obround on your vertical bracket, through the fixed hole on the rackrail bracket, and into the oval nut (G) as shown.

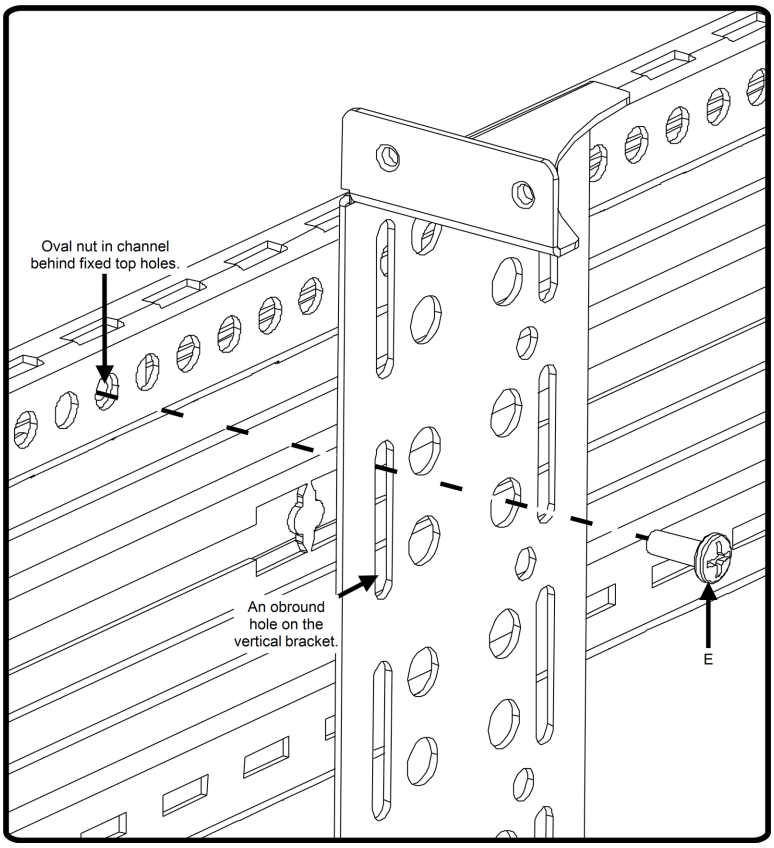

©2026 | Legrand AV Inc, Inc. All rights reserved.

NOTE Do not fully tighten screws at this point to allow for adjustments.

4. Repeat the process with another oval nut (G) and 10-32 x ½" screw (E) through an obround on the opposite side of the vertical bracket (D).
5. Tighten both screws after making your final adjustments.
6. Use a shielded Cat5e cable (or better, not provided) to connect the device to your network.
7. Attach the ferrite provided (B, Part No. 600-01660) as close as possible to the connector going into your device on your shielded Cat 5 cable (not provided).

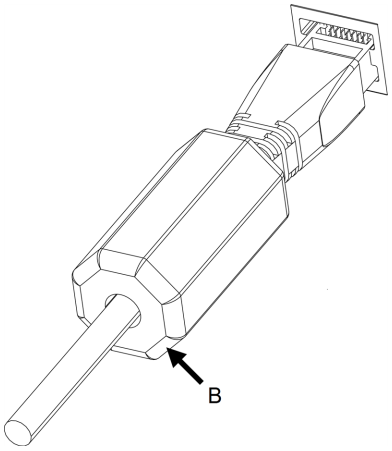

8. Plug power cord (C) into device and a properly grounded AC power source.
9. Continue setting up your RackLink device. For more information, see Installing Your Half-Rack PDU to the Vertical Bracket, on page 26.

Installing Vertical Bracket to Middle Slot on Rackrail Bracket for Half-Rack PDUs

1. Install the unit in a permanent location considering ease of access and adequate power requirements.

©2026 | Legrand AV Inc, Inc. All rights reserved.

2. Put a 10-32 x ½” screw (E) through the obround hole location on your vertical bracket as shown, and thread the screw (approximately 2 - 3 full turns) into an oval nut (G).

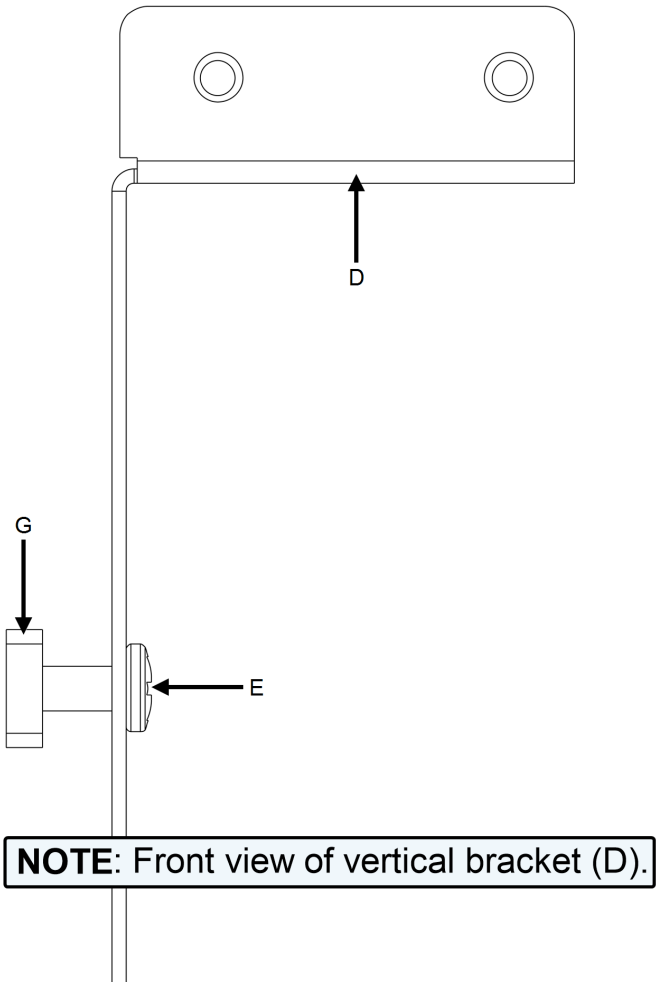

3. Repeat the process with another 10-32 x ½” screw (E) through the obround on the opposite side of the vertical bracket and thread the screw (approximately 2 - 3 full turns) into another oval nut (G).

©2026 | Legrand AV Inc, Inc. All rights reserved.

4. Insert oval nuts (G, both partially assembled to the vertical bracket (D) with screws from the previous step) through your desired slot opening along the rackrail bracket in your enclosure's interior as shown below.

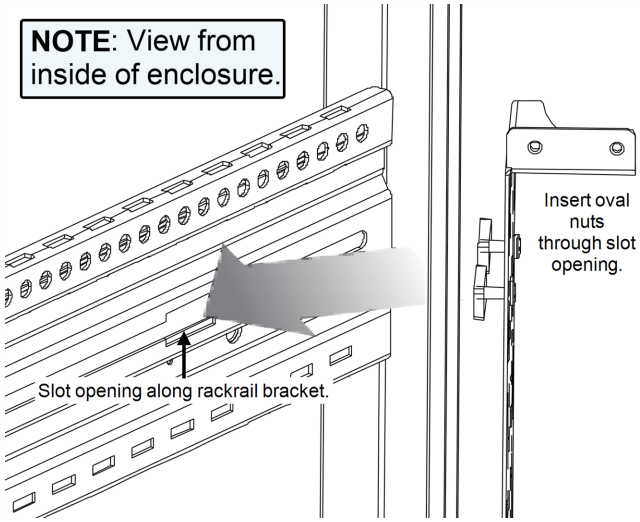

5. Make any final positioning adjustments on the vertical bracket obrounds and the specific location along rackrail bracket, and then use a #2 Phillips screwdriver to fully tighten both screws.
6. Use a shielded Cat5e cable (or better, not provided) to connect the device to your network.
7. Attach the ferrite provided (B , Part No. 600-01660) as close as possible to the connector going into your device on your shielded Cat 5 cable (not provided).

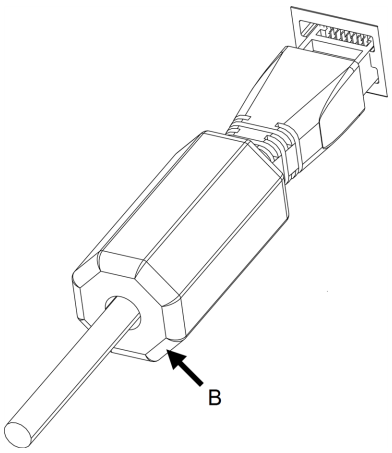

8. Plug power cord (C) into device and a properly grounded AC power source.
9. Continue setting up your RackLink device. For more information, see Installing Your Half-Rack PDU to the Vertical Bracket, on page 26.

©2026 | Legrand AV Inc, Inc. All rights reserved.

Installing Your Half-Rack PDU to the Vertical Bracket

1. Carefully slide your Half-Rack PDU (A) through the front of your mounted vertical bracket (D). Hold your PDU in place against the vertical bracket ears.

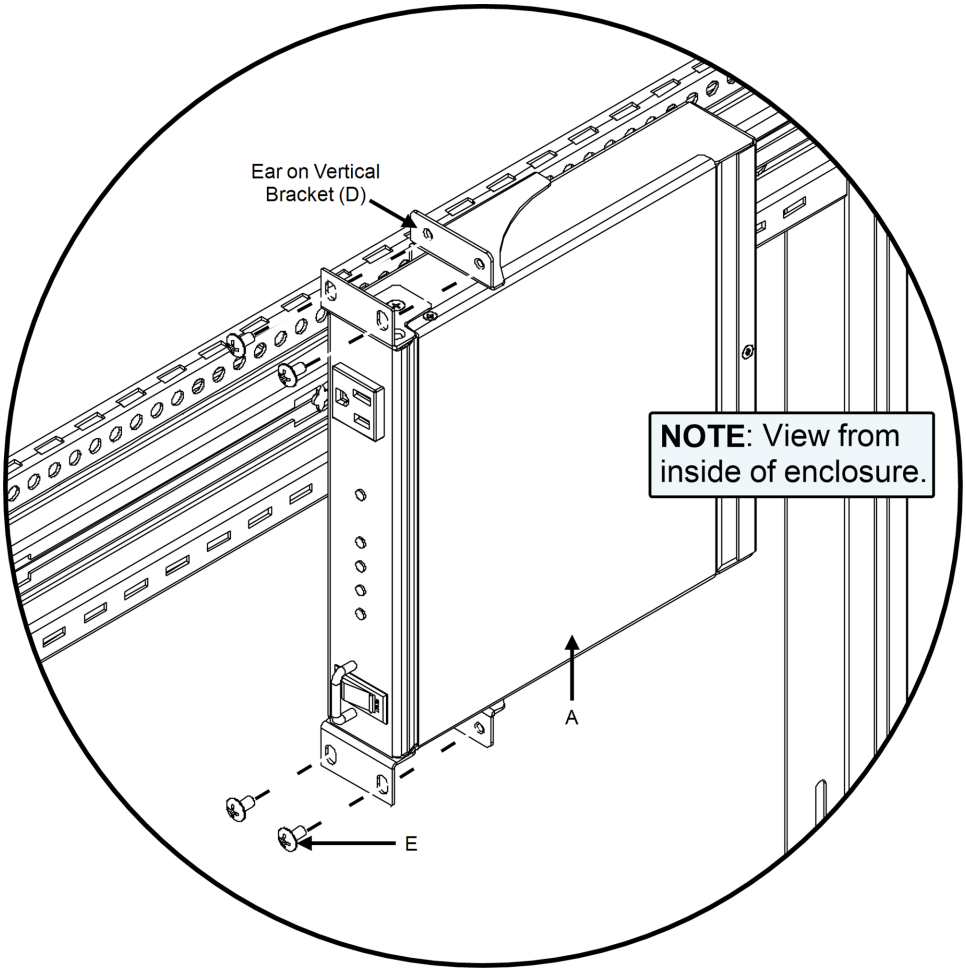

2. Use a #2 Phillips screwdriver and (4x) 10-32 x ⅜" screws (F) through the holes on the ears of your PDU and into the ears on the vertical bracket (D) as shown.
3. Press the Power button on the Front Panel. For more information, see Understanding RackLink Model Feature Sets, on page 44.
4. Continue setting up your RackLink device. For more information, see Setting Up Your RackLink Device for the First Time, on page 37.

©2026 | Legrand AV Inc, Inc. All rights reserved.

Installing Vertical Models in an Enclosure

NOTE

- This topic covers typical installations to most rackrail brackets inside of Middle Atlantic enclosures; however, the mounting bracket may also be installed on a Lever Lock™ plate or even a wall, if desired. (Wall mounting hardware not provided.)
- Exact mounting position may vary based on your specific power and cabling installation.

The following sections show how to install your mounting clips to either the fixed top holes or the middle slots of rackrail brackets inside of your enclosure. We recommend installing the mounting clips to your enclosure or other location first, and then installing your Vertical PDU (A) to the clips after.

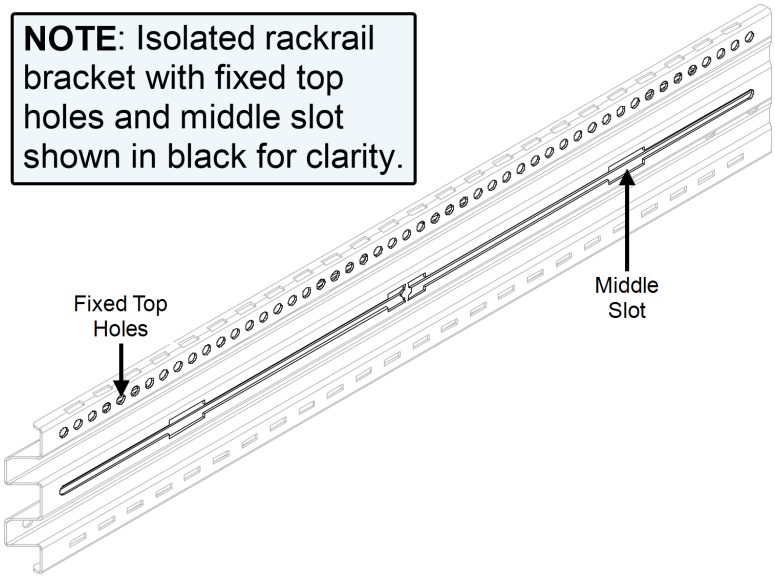

Installing the Mounting Clips to Fixed Top Holes on Rackrail Bracket for Vertical PDUs

1. Install the unit in a permanent location considering ease of access and adequate power requirements.

©2026 | Legrand AV Inc, Inc. All rights reserved.

2. Slide an oval nut (G) into the channel behind the fixed top holes on your rackrail bracket as shown.

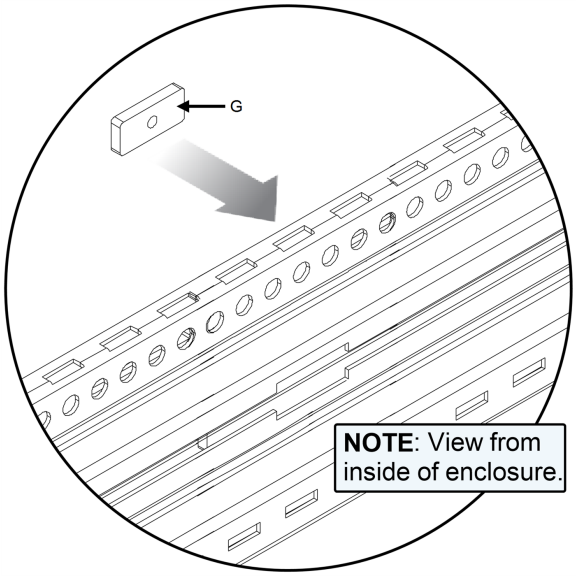

3. Use a #2 Phillips screwdriver and a 10-32 x ½" screw (E) through a hole on the mounting clip, through the fixed hole on the rackrail bracket, and into the oval nut (G) as shown.

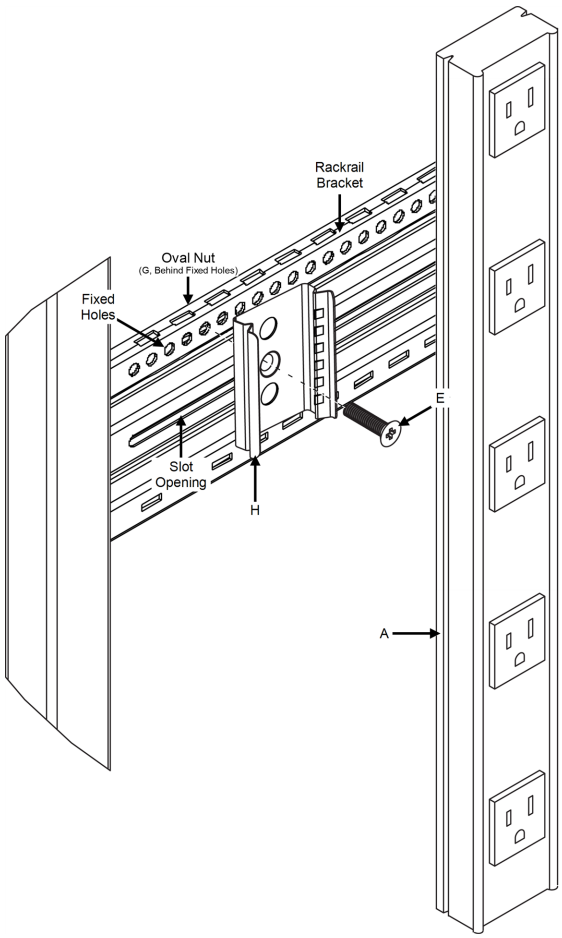

©2026 | Legrand AV Inc, Inc. All rights reserved.

NOTE Do not fully tighten screws at this point to allow for adjustments.

4. Repeat the previous steps to match the hardware amounts (oval nuts, screws, and clips) to the amount of rackrail brackets in your enclosure.
5. Tighten screws after making your final adjustments.
6. Use a shielded Cat5e cable (or better, not provided) to connect the device to your network.
7. Attach the ferrite provided (B, Part No. 600-01660) as close as possible to the connector going into your device on your shielded Cat 5 cable (not provided).

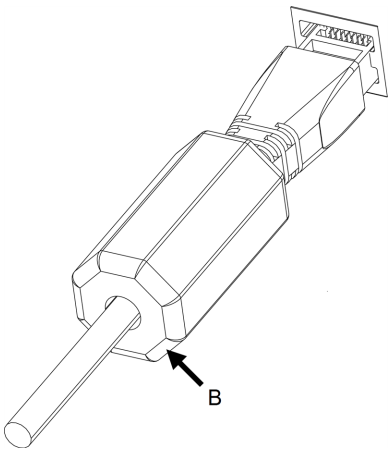

8. Plug power cord (C) into device and a properly grounded AC power source.
9. Continue setting up your RackLink device. For more information, see Installing Your Vertical PDU to the Mounting Clips, on page 31.

Installing Mounting Clips to Middle Slot on Rackrail Bracket for Vertical PDUs

1. Install the unit in a permanent location considering ease of access and adequate power requirements.

©2026 | Legrand AV Inc, Inc. All rights reserved.

2. Put a 10-32 x ½” screw (E) through a hole on the mounting clip (H) and thread the screw (approximately 2 - 3 full turns) into an oval nut (G) as shown.

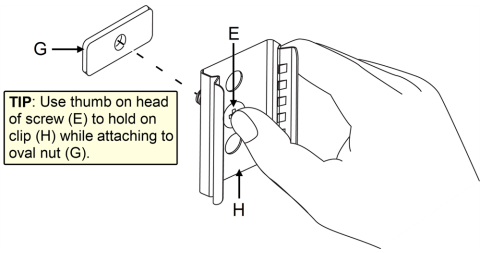

3. Insert oval nut (G, partially assembled to the mounting clip with a screw from the previous step) through your desired slot opening along the rackrail bracket in your enclosure’s interior as shown.

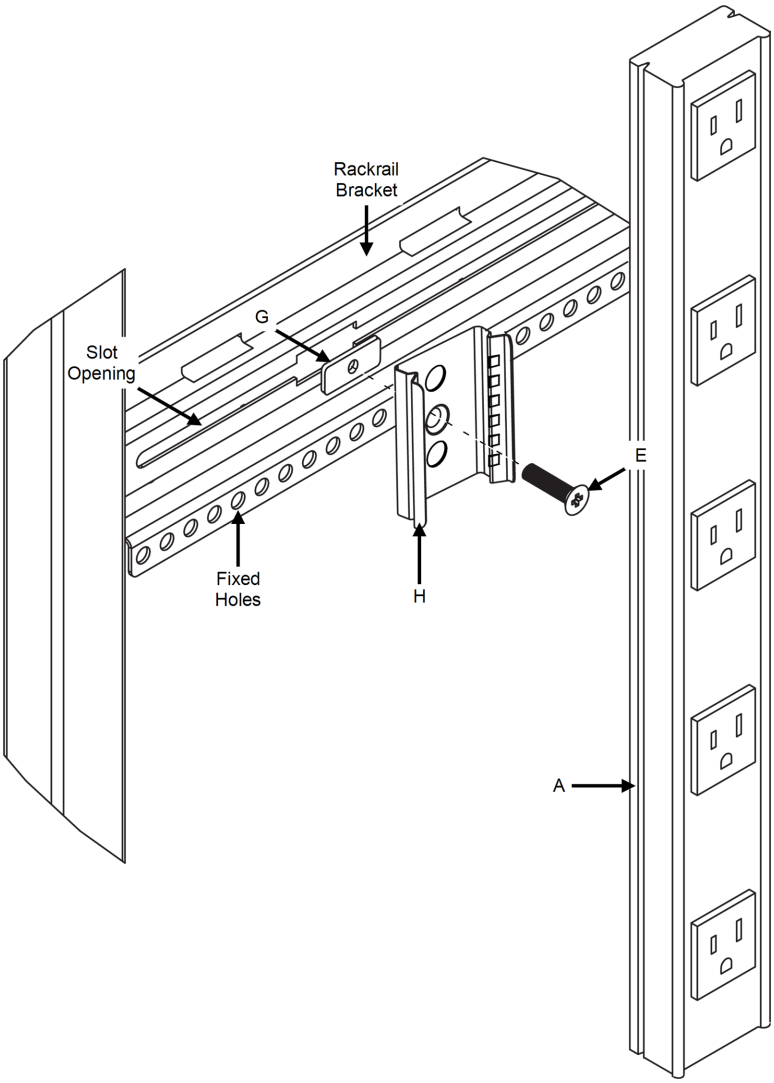

4. Repeat the previous steps to match the hardware amounts (oval nuts, screws, and clips) to the amount of rackrail brackets in your enclosure.

©2026 | Legrand AV Inc, Inc. All rights reserved.

5. Make any final positioning adjustments to the mounting clips and specific locations along the rackrail bracket, and then use a #2 Phillips screwdriver to fully tighten the screws.
6. Use a shielded Cat5e cable (or better, not provided) to connect the device to your network.
7. Attach the ferrite provided (B, Part No. 600-01660) as close as possible to the connector going into your device on your shielded Cat 5 cable (not provided).

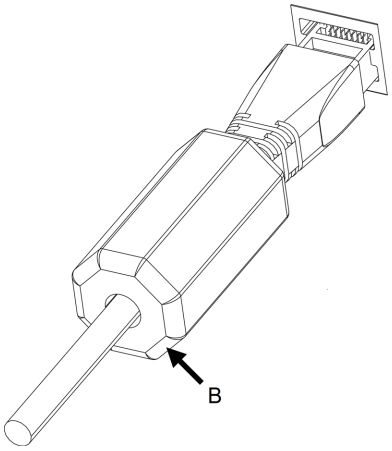

8. Plug power cord (C) into device and a properly grounded AC power source.
9. Continue setting up your RackLink device. For more information, see Installing Your Vertical PDU to the Mounting Clips, on page 31.

Installing Your Vertical PDU to the Mounting Clips

1. Align the back of your Vertical PDU (A) against the installed mounting clips (H).
2. Gently tap the Vertical PDU into each mounting clip using the palm of your hand.

©2026 | Legrand AV Inc, Inc. All rights reserved.

TIP Remove the PDU from the mounting clips by wedging a flat head screwdriver between the side of the PDU and clip, and gently prying the PDU from the clip as shown.

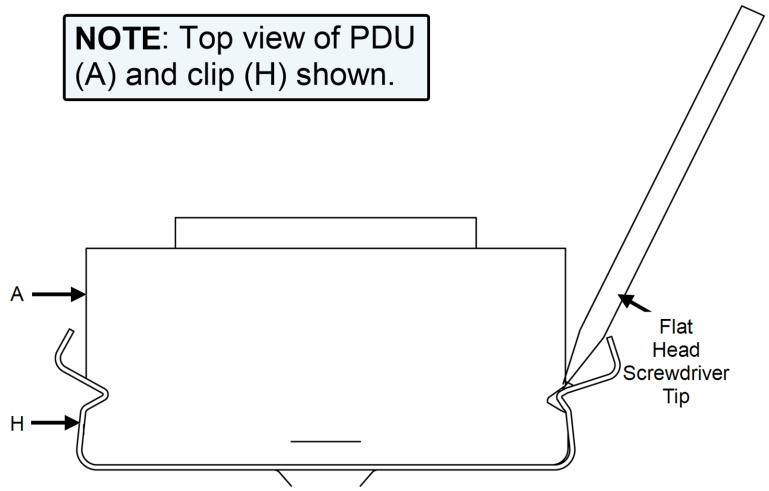

3. Continue setting up your RackLink device. For more information, see Setting Up Your RackLink Device for the First Time, on page 37.

Installing Compact Models in an Enclosure

NOTE

- This topic covers typical installations to most rackrail brackets inside of Middle Atlantic enclosures; however, the mounting clip may also be installed on a Lever Lock™ plate or even a wall, if desired.
- Exact mounting position may vary based on your specific power and cabling installation.

The following sections show how to install your mounting clips (J) to either the fixed top holes or the middle slots of rackrail bracket inside of your enclosure. We recommend installing the mounting clip to your enclosure or other location first, and then installing your Vertical PDU (A) to the clip after.

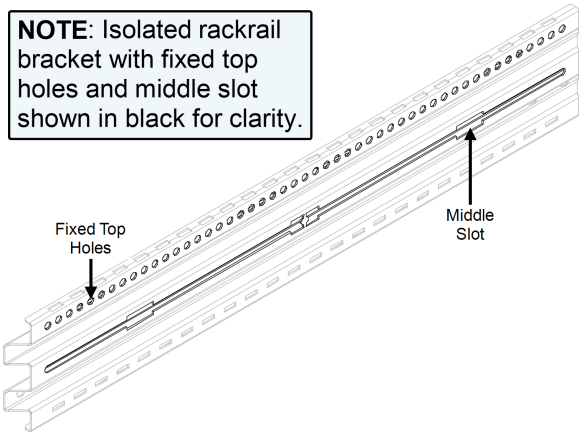

©2026 | Legrand AV Inc, Inc. All rights reserved.

Installing the Mounting Clip to Fixed Top Holes on Rackrail Bracket for Compact PDUs

1. Install the unit in a permanent location considering ease of access and adequate power requirements.
2. Slide an oval nut (G) into the channel behind the fixed top holes on your rackrail bracket as shown.

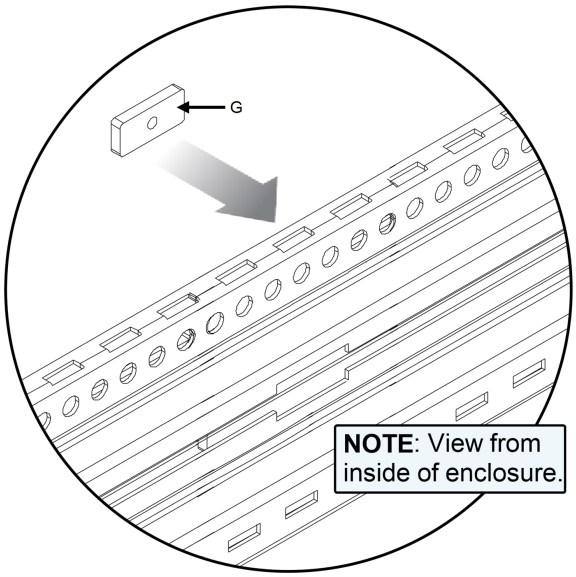

3. Use a #2 Phillips screwdriver and a 10-32 x ½" screw (E) through a hole on the mounting clip, through the fixed hole on the rackrail bracket, and into the oval nut (G) as shown.

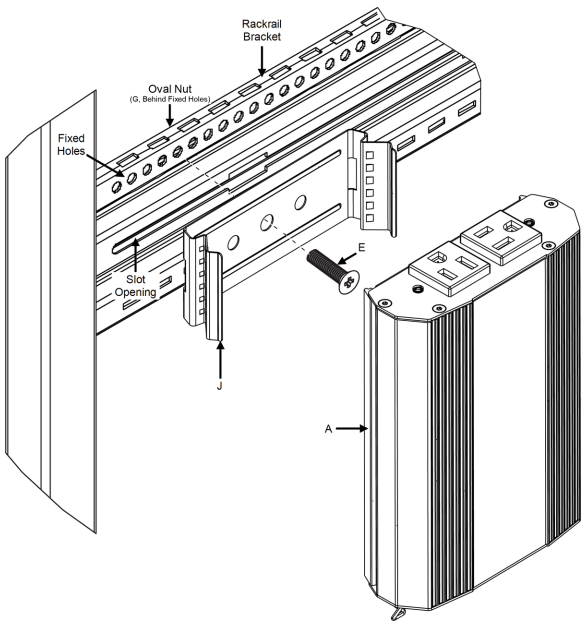

©2026 | Legrand AV Inc, Inc. All rights reserved.

NOTE Do not fully tighten screws at this point to allow for adjustments.

4. Repeat the previous steps to match the hardware amounts (oval nuts, screws, and clips) to the amount of rackrail brackets in your enclosure.
5. Tighten screws after making your final adjustments.
6. Plug power cord (C) into device and a properly grounded AC power source.
7. Use a shielded Cat5e cable (or better, not provided) to connect the device to your network.
8. Attach the ferrite provided (B, Part No. 600-01660) as close as possible to the connector going into your device on your shielded Cat 5 cable (not provided).

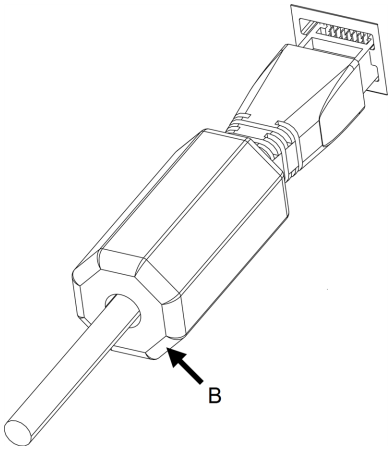

9. Continue setting up your RackLink device. For more information, see Installing Your Compact PDU to the Mounting Clip, on page 36.

Installing Mounting Clip to Middle Slot on Rackrail Bracket for Compact PDUs

1. Install the unit in a permanent location considering ease of access and adequate power requirements.

©2026 | Legrand AV Inc, Inc. All rights reserved.

2. Put a 10-32 x ½” screw (E) through a hole on the mounting clip (J) and thread the screw (approximately 2 - 3 full turns) into an oval nut (G) as shown.

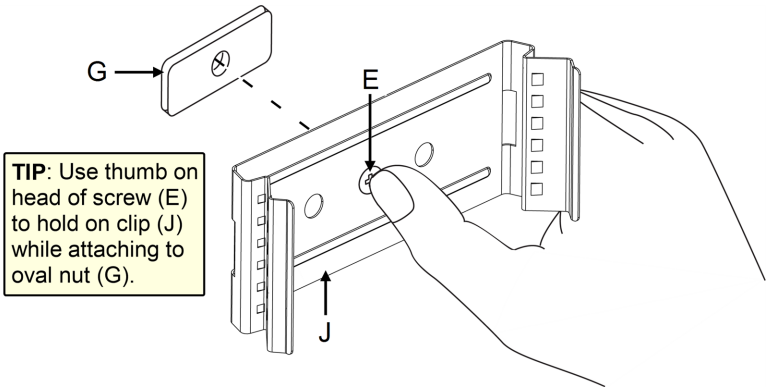

3. Insert oval nut (G, partially assembled to the mounting clip with a screw from the previous step) through your desired slot opening along the rackrail bracket in your enclosure’s interior as shown.

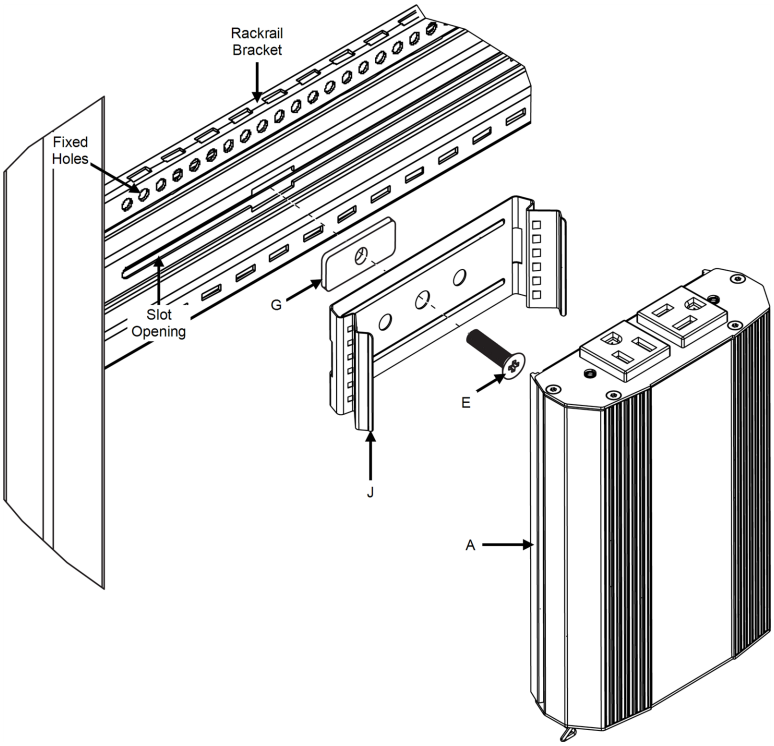

4. Repeat the previous steps to match the hardware amounts (oval nuts, screws, and clips) to the amount of rackrail brackets in your enclosure.
5. Make any final positioning adjustments to the mounting clips (E) and specific locations along the rackrail bracket, and then use a #2 Phillips screwdriver to fully tighten the screws.
6. Use a shielded Cat5e cable (or better, not provided) to connect the device to your network.

©2026 | Legrand AV Inc, Inc. All rights reserved.

7. Attach the ferrite provided (Part No. 600-01660) as close as possible to the connector going into your device on your shielded Cat 5 cable (not provided).

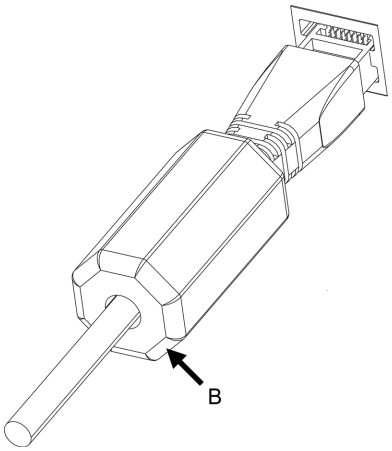

8. Plug power cord into device and a properly grounded AC power source.
9. Continue setting up your RackLink device. For more information, see Installing Your Compact PDU to the Mounting Clip, on page 36.

Installing Your Compact PDU to the Mounting Clip

1. Align the back of your Compact PDU (A) against the installed mounting clips (J).
2. Gently tap the Compact PDU into each mounting clip using the palm of your hand.

> **TIP** Remove the PDU from the mounting clips by wedging a flat head screwdriver between the side of the PDU and clip, and gently prying the PDU from the clip as shown.

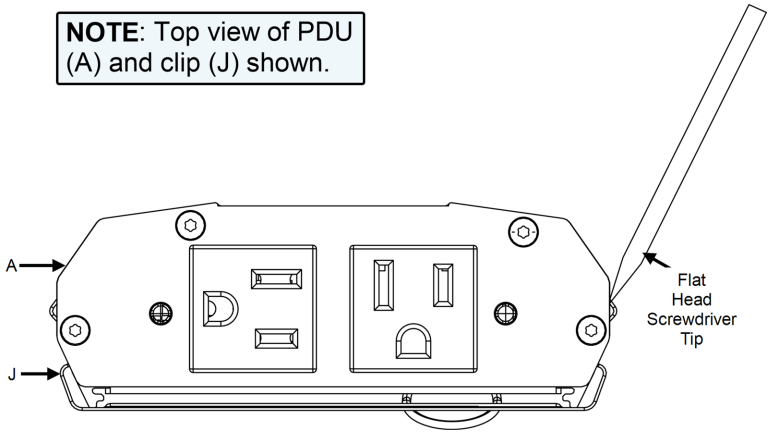

3. Continue setting up your RackLink device. For more information, see Setting Up Your RackLink Device for the First Time, on page 37.

©2026 | Legrand AV Inc, Inc. All rights reserved.

Setting Up Your RackLink Device for the First Time

NOTE

If you're not using RackLink Cloud Services, you may need to configure a port on your firewall to allow passthrough traffic to your RackLink device whether you use DDNS or a static TCP/IP address. Please refer to your router's instructions regarding port configuration. If you do not have a static TCP/IP address, you must first setup a method for handling the address changes, such as using a DDNS service. Once completed, please follow the same instructions as if you had a static address, and then open a port on your router to allow passthrough traffic to your RackLink device.

Your RackLink Ethernet network port has DHCP enabled by default. If the system is unable to acquire an IP address from the DHCP server, the system automatically assigns **`192.168.1.200`**.

If you are using DHCP, your device should automatically work, and you can skip to the Using the Web Interface, on page 54. If you are not using DHCP and would like to specify a static TCP/IP address, use your computer and a network cable (Cat5e or better, not provided) along with the following procedures and configure your RackLink device accordingly.

NOTE

The following procedure shows steps using Windows 7. The setup steps are similar in other operating systems.

©2026 | Legrand AV Inc, Inc. All rights reserved.

Configuring TCP/IP on Your Computer

Use this procedure first to configure TCP/IP on your computer, and then configure TCP/IP on your RackLink device using either the web interface or Discovery Tool. For more information, see Configuring TCP/IP Using the Web Interface, on page 43.

1. Disconnect the computer from any networks.
2. Click **Start**.
3. Click **Control Panel**.

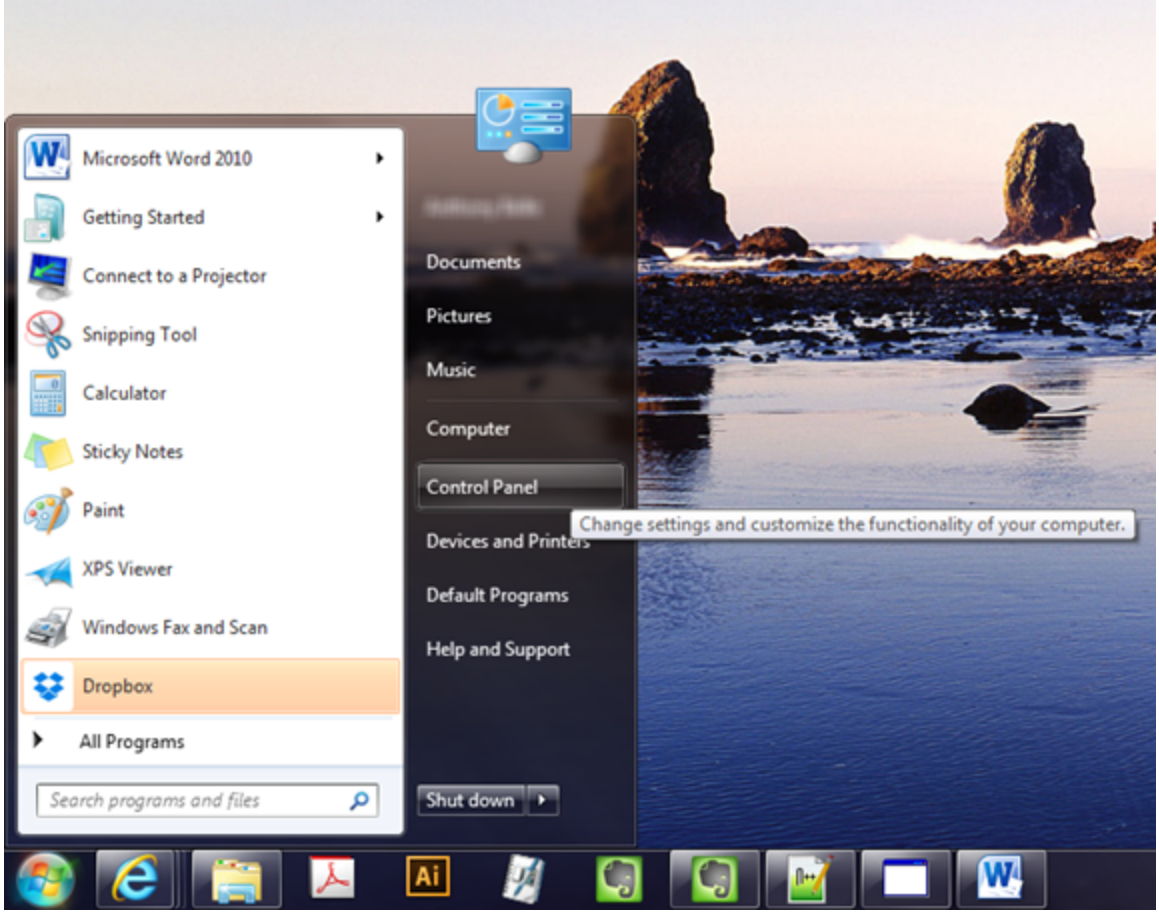

©2026 | Legrand AV Inc, Inc. All rights reserved.

The Control Panel appears.

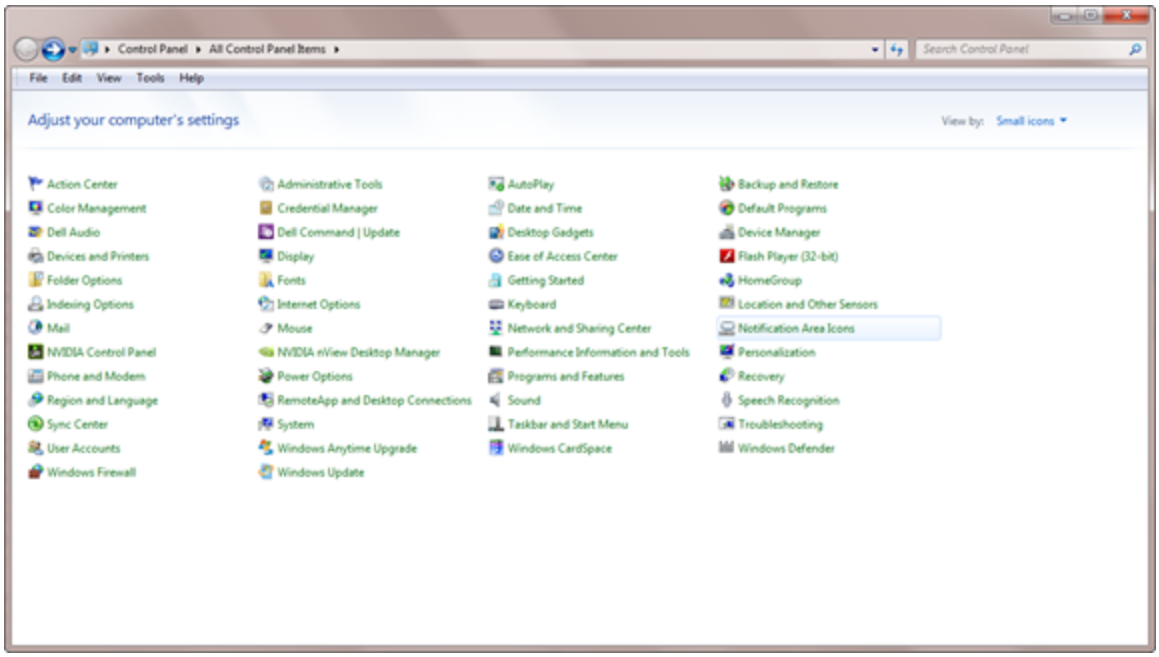

4. Double click **Network Sharing Center**.

   The Network Sharing Center screen appears.

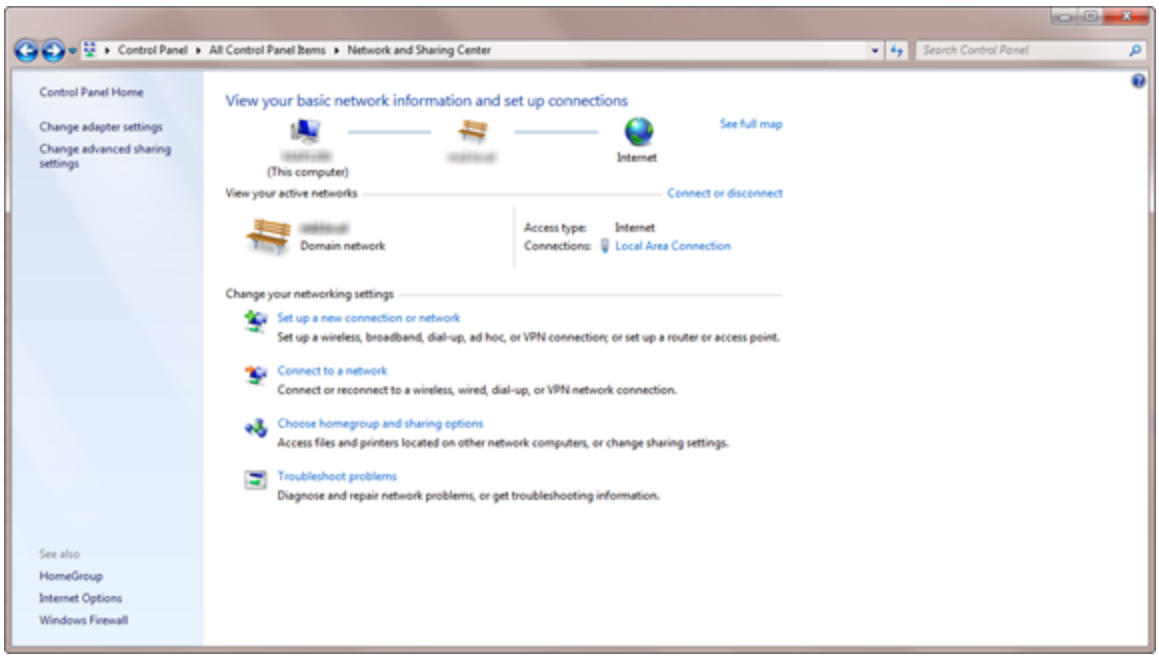

5. Click **Change adapter settings**.

©2026 | Legrand AV Inc, Inc. All rights reserved.

The Network Settings screen appears.

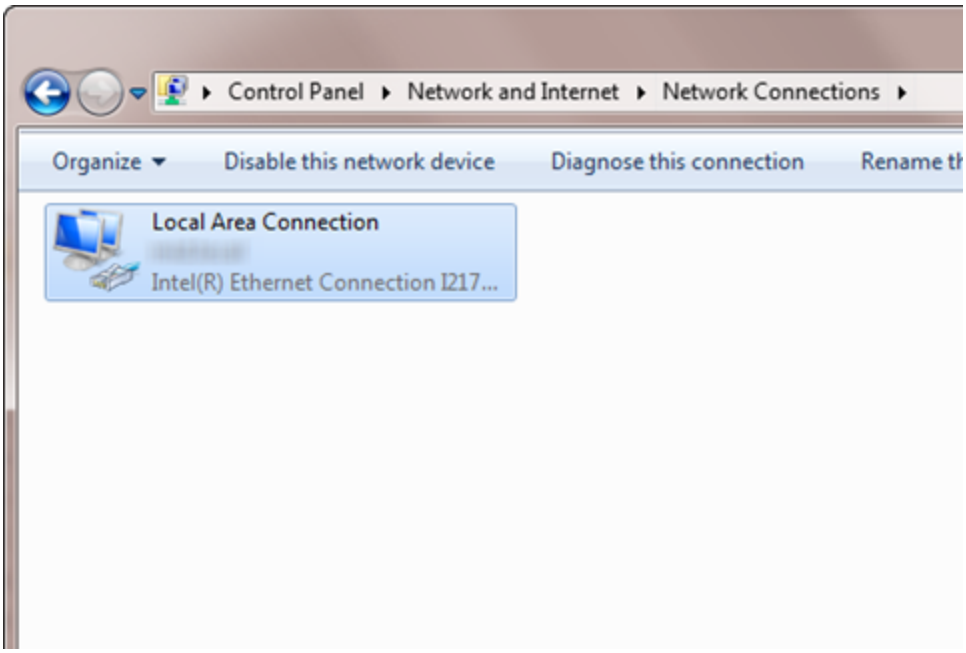

Locate the computer's wired network connection, which should be listed in the LAN or High-Speed Internet group and be named similar to "Local Area Connection."

6. Right-click the wired network connection and select **Properties**.

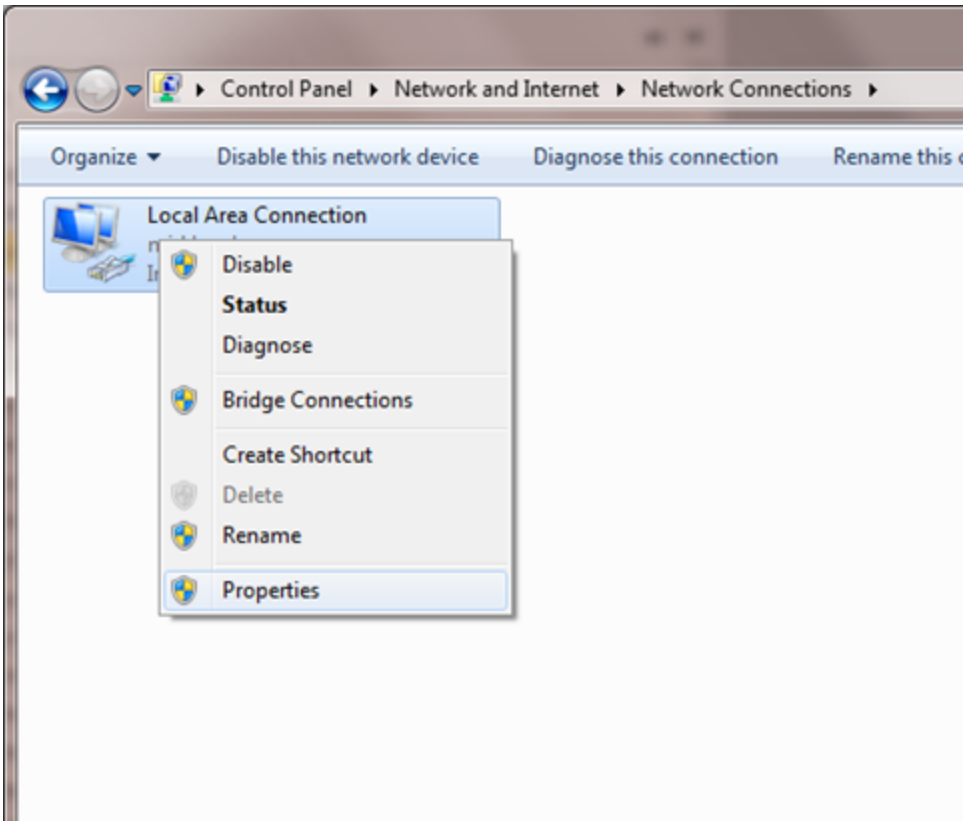

©2026 | Legrand AV Inc, Inc. All rights reserved.

The Local Area Connection Properties window appears.

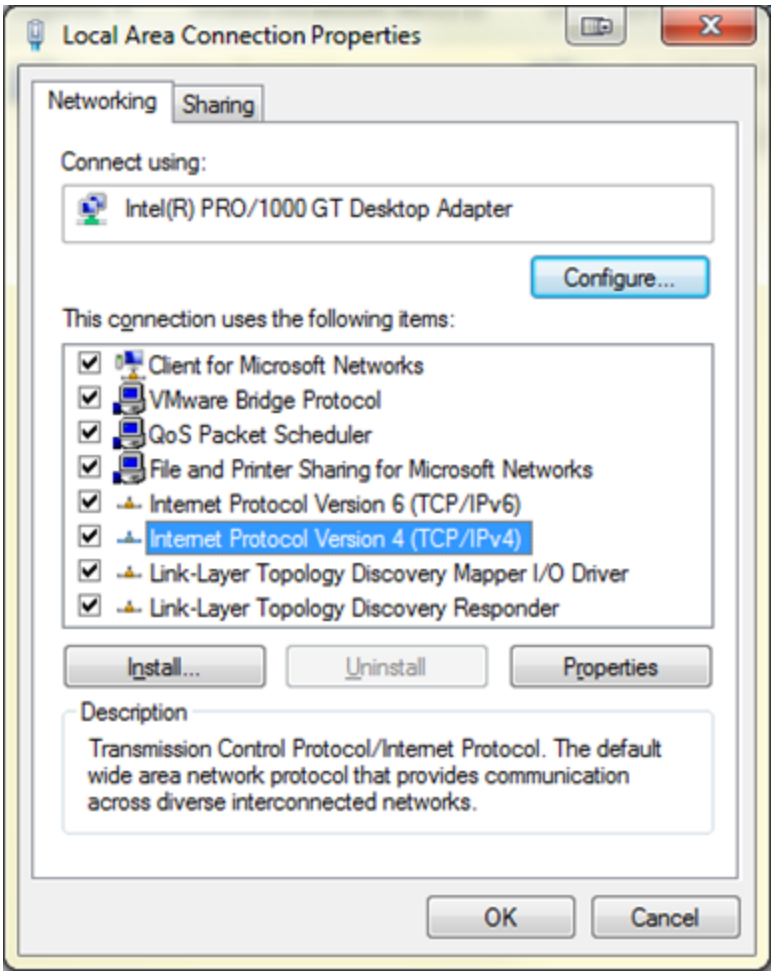

7. Click **Internet Protocol Version 4 (TCP/IPv4)** to highlight the row.
8. Click **Properties**.

©2026 | Legrand AV Inc, Inc. All rights reserved.

The Internet Protocol (IP) Properties window appears.

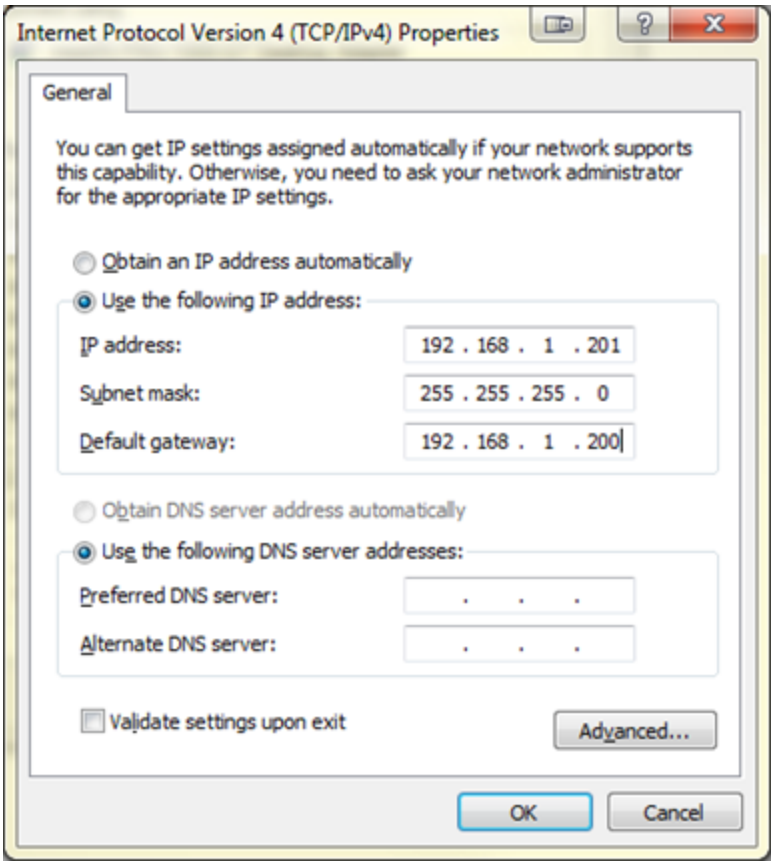

9. Write down the computer's current TCP/IP settings.

> **NOTE** Make a note of these settings to restore the computer back to the original configuration after your RackLink device is directly connected to your computer.

10. Select Use the following TCP/IP address and configure the following:
    - In the IP address field, enter **`192.168.1.201`**.
    - In the Subnet mask field, enter **`255.255.255.0`**.
    - In the Default gateway field, enter **`192.168.1.200`**.
11. Click **OK**.

> **NOTE** You may need to reboot your computer for the new settings to take effect.

©2026 | Legrand AV Inc, Inc. All rights reserved.

Configuring TCP/IP Using the Web Interface

First configure TCP/IP on your computer, and then configure TCP/IP on your RackLink device using either the web interface procedure in this topic or the Discovery Tool. For more information, see Configuring TCP/IP on Your Computer, on page 38

1. With your RackLink device still powered off, plug one end of the network cable (Cat5e or better, not provided) into the network jack on the back of your RackLink device.
2. Plug the other end of the network cable into the network jack on your computer.
3. Plug in and power on your RackLink device.

   NOTE

   - After a few seconds, the computer and the RackLink unit should establish a network connection.
   - The RackLink's alert light blinks red when it is attempting to acquire a network address. The alert light stops blinking once it has a valid TCP/IP address.

4. Open a web browser and navigate to **`http://192.168.1.200`**.

   For more information, see Setting Up Your RackLink Device for the First Time, on page 37.

5. Log in to the web interface with the administrator account.

   For more information, see Logging in to the Administrator Settings Menu, on page 72.

6. Click **Network**.
7. Change the network information to your preferred values for IP Address, Subnet Mask, Gateway, and DNS Server.
8. Click **Save**.

   NOTE

   After these settings have been changed, you no longer can access your RackLink device from your computer directly connected with the network cable.

9. Disconnect the network cable connecting your RackLink device and your computer.
10. Restore the computer to the original TCP/IP settings using the information you wrote down during Configuring TCP/IP on Your Computer, on page 38.
11. Put your RackLink device in its final location.

©2026 | Legrand AV Inc, Inc. All rights reserved.

Understanding RackLink Model Feature Sets

Topics in this section use lettered callouts to label the features on the Front, Back, and Bottom sides of RackLink models and correspond with explanations further below.

RLNK-215 Feature Set

Front of RLNK-215

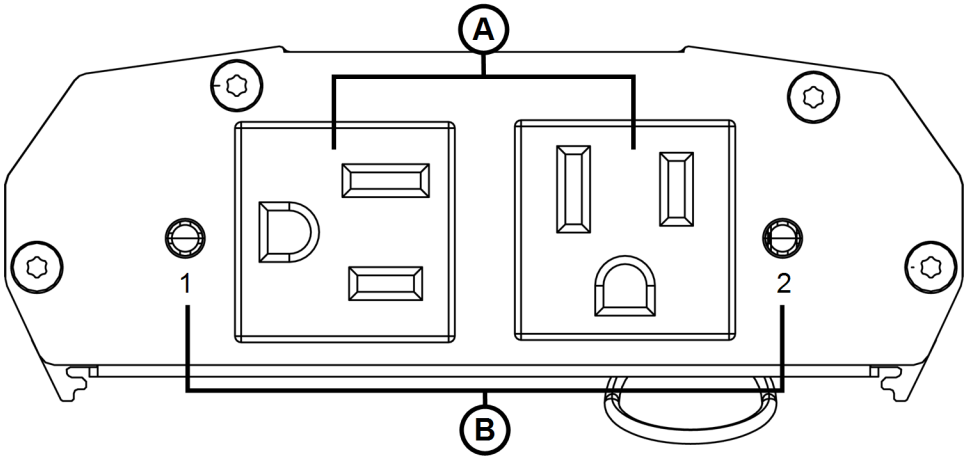

A. **Two Controlled Outlets**

B. **Integrated Controlled Outlet ON/OFF LED**: The LED illuminates green when the outlet is energized.

> **NOTE** Each controlled outlet has a numbered LED.

Back of RLNK-215

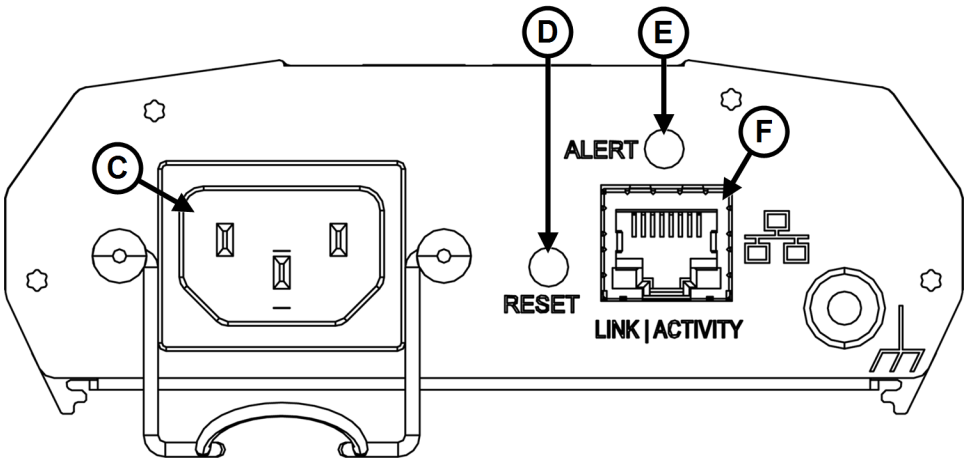

©2026 | Legrand AV Inc, Inc. All rights reserved.

C. **IEC C14 Power Input**: 120V nominal, 12A (total load, all outlets), 60Hz input with cord retainer.

D. **Factory Reset Button**: Resets to DHCP and default passwords. For more information, see Configuring Network Settings, on page 95 and Configuring Passwords, on page 99.

E. **Alert LED**: The LED illuminates red when an alarm condition occurs (any AutoPing failure). For more information, see Configuring Email Settings, on page 86

F. **Ethernet Port (10/100)**: Used to connect to a network, requires a Cat5e cable (or better, not provided).

RLNK-210-IEC-NS Feature Set

Front of RLNK-210-IEC-NS

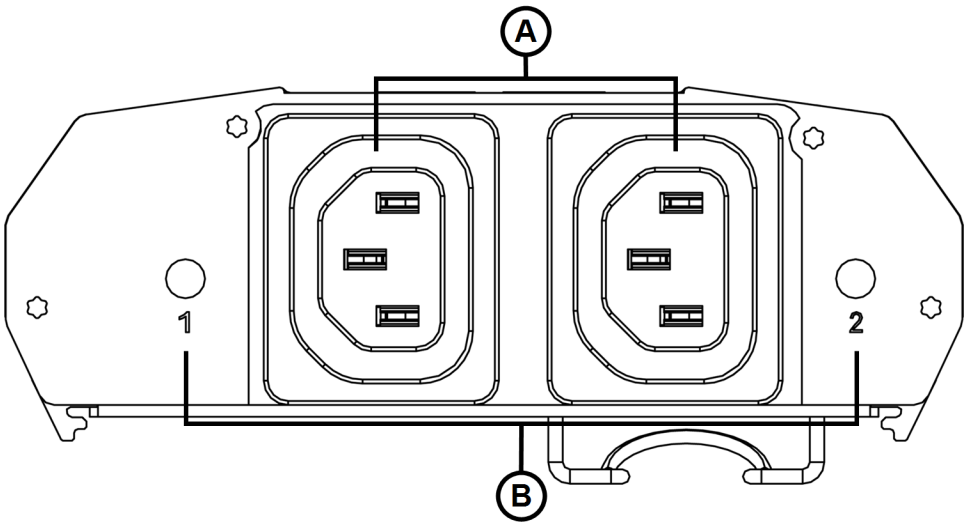

A. **Two Controlled Outlets**

B. **Integrated Controlled Outlet ON/OFF LED**: The LED illuminates green when the outlet is energized.

> **NOTE** Each controlled outlet has a numbered LED.

©2026 | Legrand AV Inc, Inc. All rights reserved.

Back of RLNK-210-IEC-NS

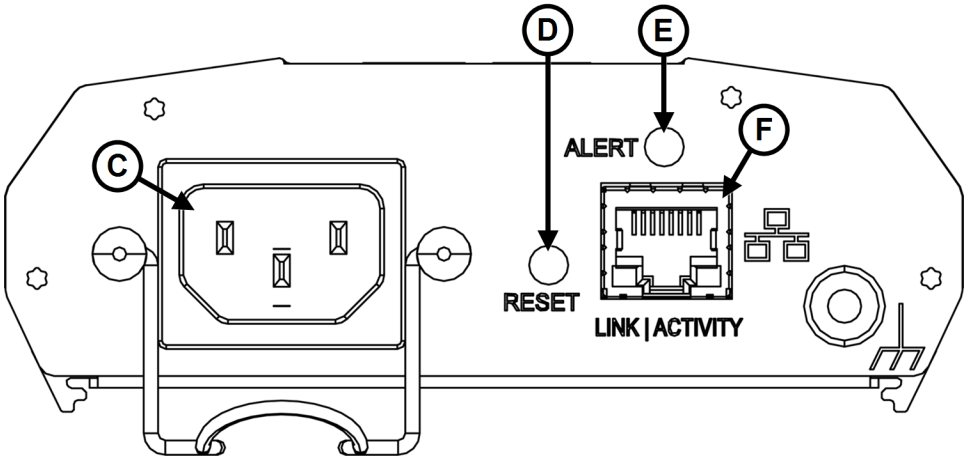

C. **IEC C14 Power Input**: 100-240V nominal, 10A (total load, all outlets), 50-60Hz input with cord retainer.

D. **Factory Reset Button**: Resets to DHCP and default passwords. For more information, see Configuring Network Settings, on page 95 and Configuring Passwords, on page 99.

E. **Alert LED**: The LED illuminates red when an alarm condition occurs (any AutoPing failure). For more information, see Configuring Email Settings, on page 86

F. **Ethernet Port (10/100)**: Used to connect to a network, requires a Cat5e cable (or better, not provided).

RLNK-415R and RLNK-420R Feature Sets

Front of RLNK-415R and RLNK-420R

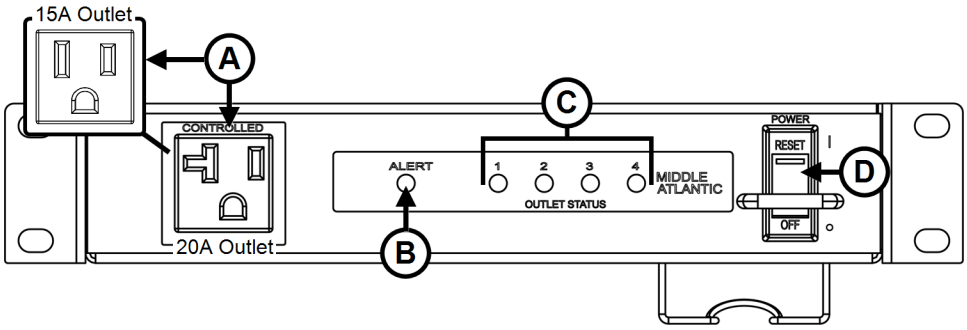

A. **Controlled Outlet**

B. **Alert LED**: The LED illuminates red when an alarm condition occurs (any AutoPing failure). For more information, see Configuring Email Settings, on page 86

©2026 | Legrand AV Inc, Inc. All rights reserved.

C. **Integrated Controlled Outlet ON/OFF LEDs**: The LED illuminates green when the outlet is energized.

> **NOTE** Each controlled outlet has a numbered LED.

D. **Integrated Power Switch/Circuit Breaker**

Back of RLNK-415R and RLNK-420R

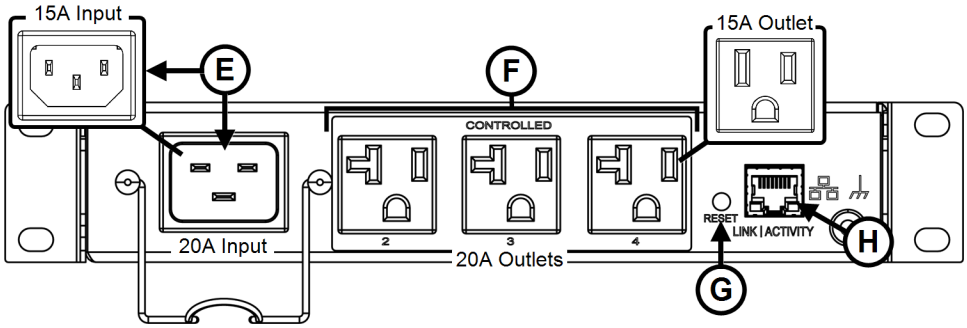

E. **Power Input and Total Load**

- **IEC C14 Power Input on RLNK-415R**: 120V nominal, 12A (total load, all outlets), 60Hz input with cord retainer.
- **IEC C20 Power Input on RLNK-420R**: 120V nominal, 16A (total load, all outlets), 60Hz input with cord retainer.

F. **Three Controlled Outlets**

G. **Factory Reset Button**: Resets to DHCP and default passwords. For more information, see Configuring Network Settings, on page 95 and Configuring Passwords, on page 99.

H. **Ethernet Port (10/100)**: Used to connect to a network, requires a Cat5e cable (or better, not provided).

RLNK-410R-IEC-NS Feature Set

Front of RLNK-410R-IEC-NS

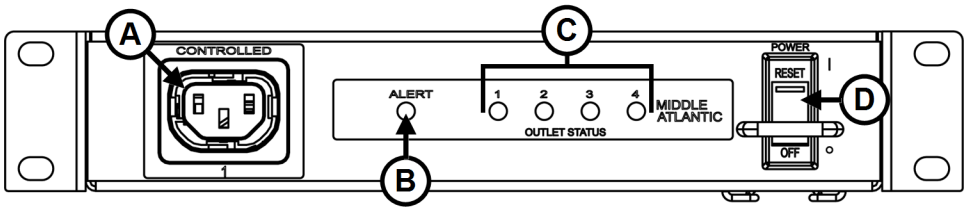

©2026 | Legrand AV Inc, Inc. All rights reserved.

A. **Controlled Outlet**

B. **Alert LED**: The LED illuminates red when an alarm condition occurs (any AutoPing failure). For more information, see Configuring Email Settings, on page 86

C. **Integrated Controlled Outlet ON/OFF LEDs**: The LED illuminates green when the outlet is energized.

> **NOTE** Each controlled outlet has a numbered LED.

D. **Integrated Power Switch/Circuit Breaker**

Back of RLNK-410R-IEC-NS

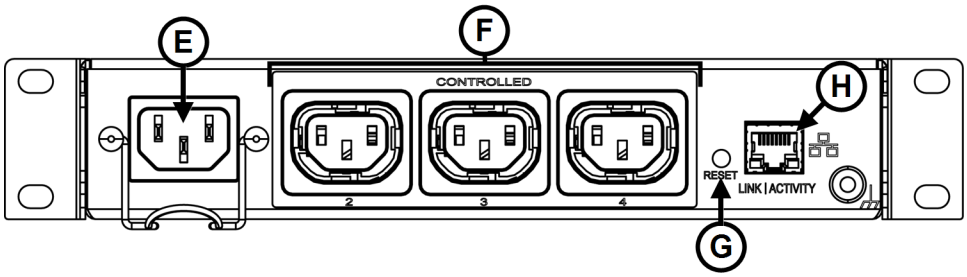

E. **IEC C14 Power Input**: 100-240V nominal, 10A (total load, all outlets), 50-60Hz input with cord retainer.

F. **Three Controlled Outlets**

G. **Factory Reset Button**: Resets to DHCP and default passwords. For more information, see Configuring Network Settings, on page 95 and Configuring Passwords, on page 99.

H. **Ethernet Port (10/100)**: Used to connect to a network, requires a Cat5e cable (or better, not provided).

RLNK-915R and RLNK-920R Feature Sets

Front of RLNK-915R and RLNK-920R

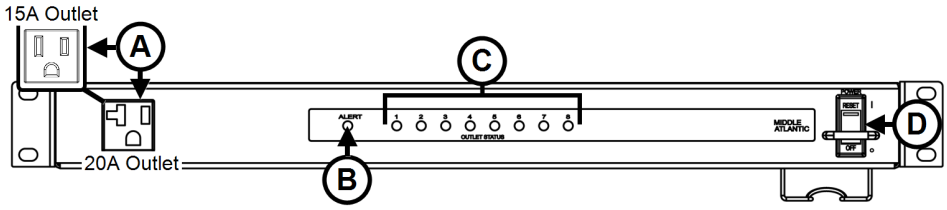

©2026 | Legrand AV Inc, Inc. All rights reserved.

A. **Switched Outlet**: Controlled by the main power switch.

B. **Alert LED**: The LED illuminates red when an alarm condition occurs (any AutoPing failure). For more information, see Configuring Email Settings, on page 86

C. **Integrated Controlled Outlet ON/OFF LEDs**: The LED illuminates green when the outlet is energized.

> **NOTE** Each controlled outlet has a numbered LED.

D. **Integrated Power Switch/Circuit Breaker**

Back of RLNK-915R and RLNK-920R

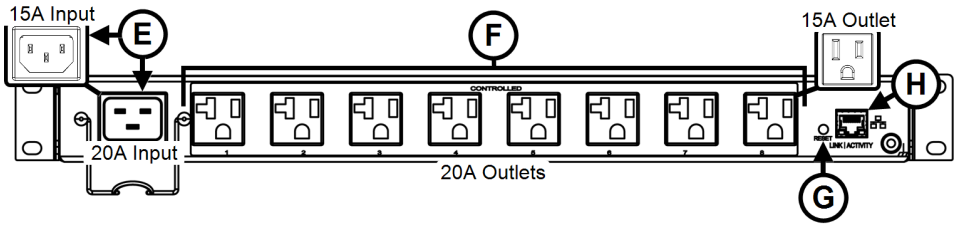

E. **Power Input and Total Load**

- **IEC C14 Power Input on RLNK-915R**: 120V nominal, 12A (total load, all outlets), 60Hz input with cord retainer.
- **IEC C20 Power Input on RLNK-920R**: 120V nominal, 16A (total load, all outlets), 60Hz input with cord retainer.

F. **Eight Controlled Outlets**

G. **Factory Reset Button**: Resets to DHCP and default passwords. For more information, see Configuring Network Settings, on page 95 and Configuring Passwords, on page 99.

H. **Ethernet Port (10/100)**: Used to connect to a network, requires a Cat5e cable (or better, not provided).

RLNK-910R-IEC-NS Feature Set

Front of RLNK-910R-IEC-NS

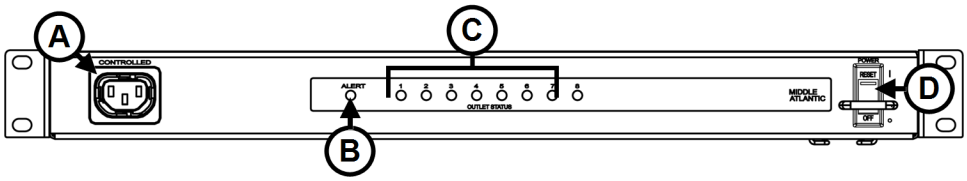

©2026 | Legrand AV Inc, Inc. All rights reserved.

A. **Switched Outlet**: Controlled by the main power switch.

B. **Alert LED**: The LED illuminates red when an alarm condition occurs (any AutoPing failure). For more information, see Configuring Email Settings, on page 86

C. **Integrated Controlled Outlet ON/OFF LEDs**: The LED illuminates green when the outlet is energized.

> **NOTE** Each controlled outlet has a numbered LED.

D. **Integrated Power Switch/Circuit Breaker**

Back of RLNK-910R-IEC-NS

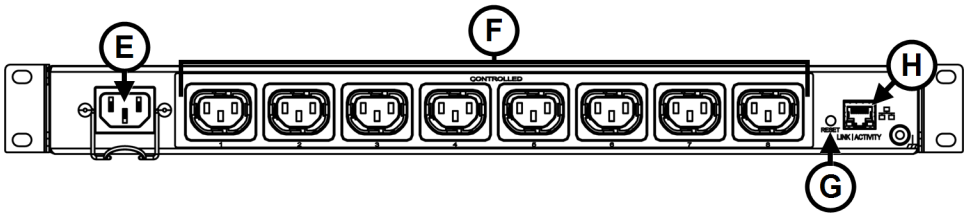

E. **IEC C14 Power Input**: 100-240V nominal, 10A (total load, all outlets), 50-60Hz input with cord retainer.

F. **Eight Controlled Outlets**

G. **Factory Reset Button**: Resets to DHCP and default passwords. For more information, see Configuring Network Settings, on page 95 and Configuring Passwords, on page 99.

H. **Ethernet Port (10/100)**: Used to connect to a network, requires a Cat5e cable (or better, not provided).

©2026 | Legrand AV Inc, Inc. All rights reserved.

RLNK-1015V Feature Set

Bottom of RLNK-1015V

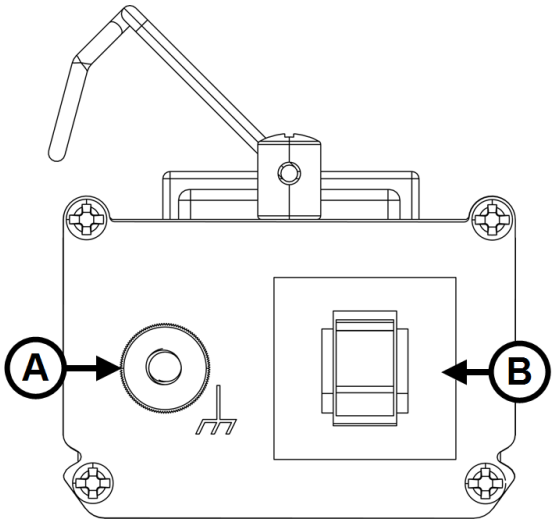

A. **Ground/Bond Stud**

B. **Circuit Breaker**

Front of RLNK-1015V

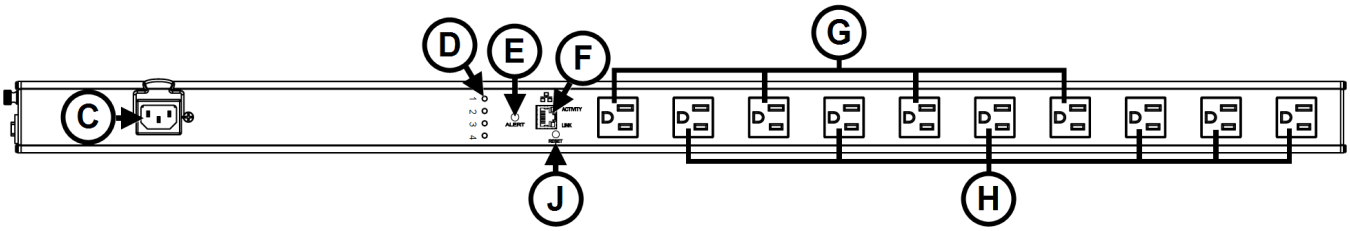

C. **IEC C14 Power Input**: 120V nominal, 12A (total load, all outlets), 60Hz input with cord retainer.

D. **Integrated Controlled Outlet ON/OFF LEDs**: The LED illuminates green when the outlet is energized.

> **NOTE** Each controlled outlet has a numbered LED.

E. **Alert LED**: The LED illuminates red when an alarm condition occurs (any AutoPing failure). For more information, see Configuring Email Settings, on page 86

©2026 | Legrand AV Inc, Inc. All rights reserved.

F. **Ethernet Port (10/100)**: Used to connect to a network, requires a Cat5e cable (or better, not provided).

G. **Controlled Outlets**

H. **Switched Outlets**: Energized by the main power switch.

I. **Factory Reset Button**: Resets to DHCP and default passwords. For more information, see Configuring Network Settings, on page 95 and Configuring Passwords, on page 99.

RLNK-1615V Feature Set

Bottom of RLNK-1615V

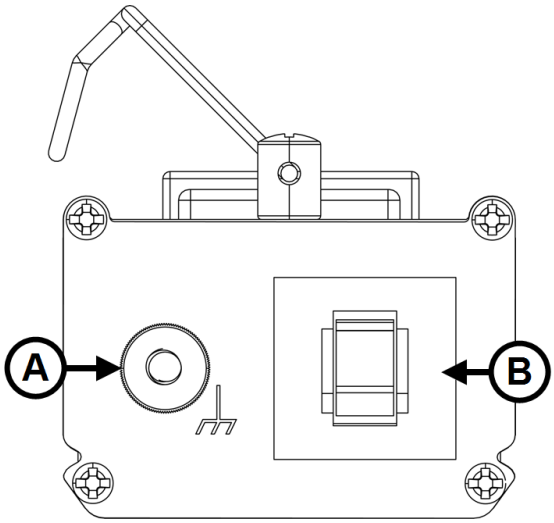

A. **Ground/Bond Stud**

B. **Circuit Breaker**

Front of RLNK-1615V

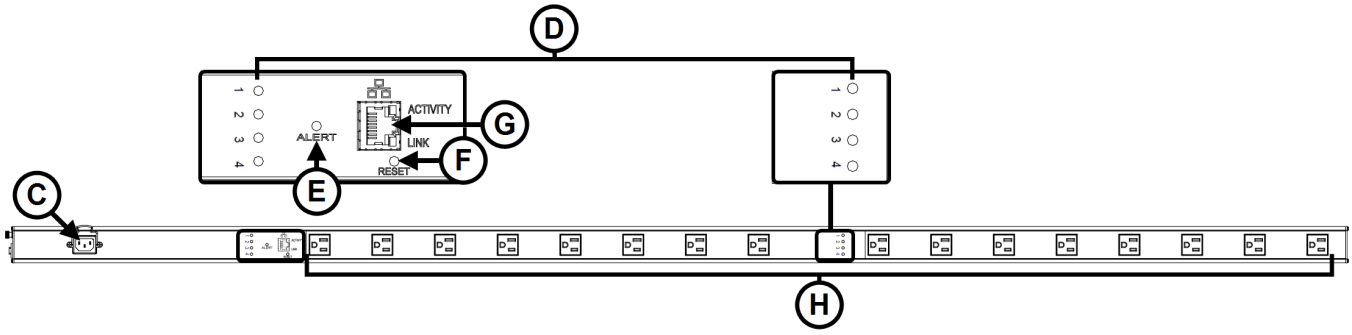

©2026 | Legrand AV Inc, Inc. All rights reserved.

C. **IEC C14 Power Input**: 120V nominal, 12A (total load, all outlets), 60Hz input with cord retainer.

D. **Integrated Controlled Outlet ON/OFF LEDs**: The LED illuminates green when the outlet is energized.

> **NOTE** Each controlled outlet has a numbered LED.

E. **Alert LED**: The LED illuminates red when an alarm condition occurs (any AutoPing failure). For more information, see Configuring Email Settings, on page 86

F. **Factory Reset Button**: Resets to DHCP and default passwords. For more information, see Configuring Network Settings, on page 95 and Configuring Passwords, on page 99.

G. **Ethernet Port (10/100)**: Used to connect to a network, requires a Cat5e cable (or better, not provided).

H. **Sixteen Outlets**: Alternating upward from controlled to switched, respectively.

©2026 | Legrand AV Inc, Inc. All rights reserved.

Using the Web Interface

The web interface allows you to control your RackLink device from a computer. You can access it from the Discovery Tool or by entering your RackLink device's IP address in a browser. For more information, see Setting Up Your RackLink Device for the First Time, on page 37.

NOTE Remaining images in this manual typically show the use of a RLNK-1015V and a RLNK-415R, among other models. Unless otherwise noted, model variations do not affect the procedures explained.

Accessing the Web Interface

1. Use a network cable (Cat 5 or better, not provided) to connect the network port on your device to the network at your location. Make sure your computer is connected to the same LAN as your device.
2. Open the RackLink Discovery Tool and click the **Discover** button to locate RackLink devices on your network.

   Download the Discovery Tool self-extracting executable onto your computer from the Power Downloads page at: https://www.legrandav.com/resources/power-downloads.

   NOTE
   - You may need to contact your administrator to run a self-extracting executable on your computer.
   - You may need to disable your Windows firewall to discover your device.
   - If you have previously changed the host name or IP address of your network card, access the interface using your new settings.
   - Chrome is used as the web browser for the example shown in this topic. The procedures and images are similar if you use a different browser.

   The Discovery Tool opens a web browser and accesses your device IP address (`192.168.1.201`, unless changed).

   For more information, see Using the RackLink Discovery Tool on a PC, on page 1.

©2026 | Legrand AV Inc, Inc. All rights reserved.

3. Click **Advanced** and then **Proceed** to bypass the security certificate warning (since locally issued certificates may be used at this point).

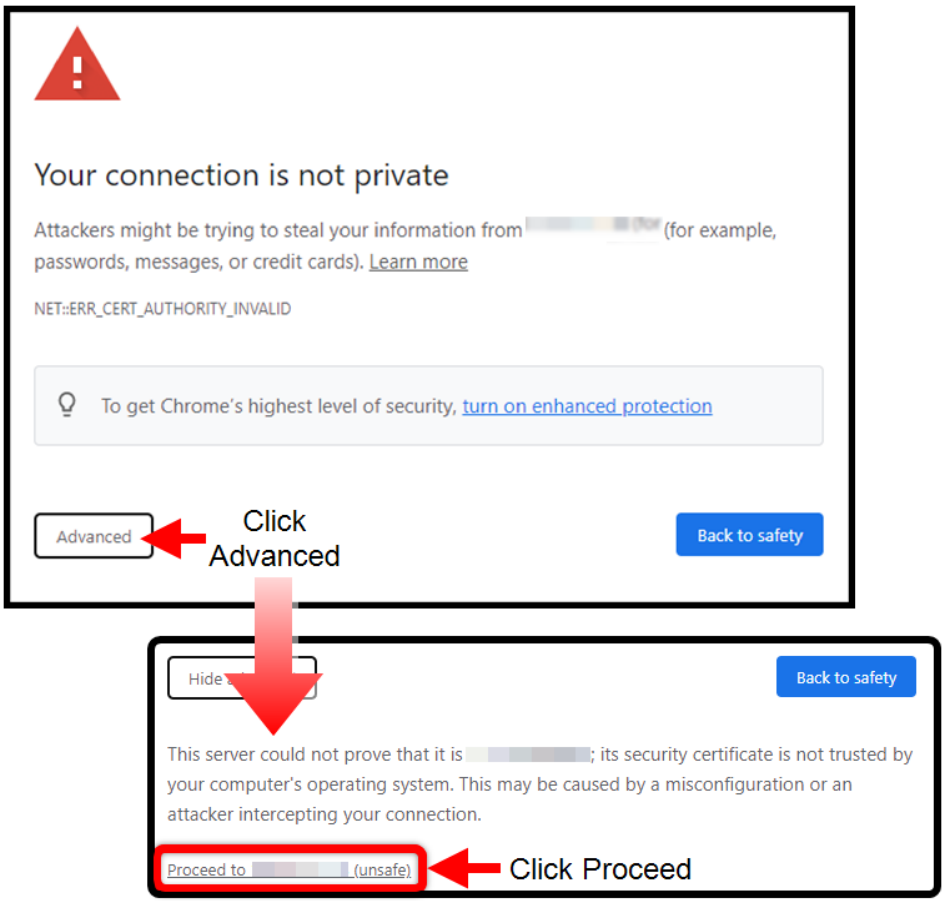

The web interface login appears and prompts you for credentials.

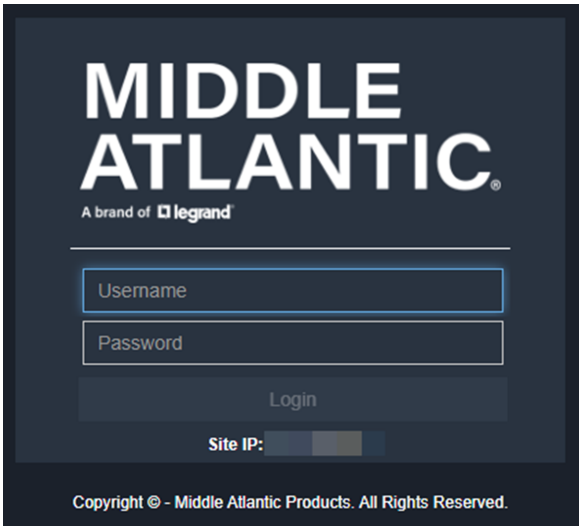

©2026 | Legrand AV Inc, Inc. All rights reserved.

4. Log into the web interface with username: **`admin`** and password: **`admin`** default credentials.

   The default names and passwords for the Administrator, User, and Control Systems accounts in your web interface, respectively, are as follows:

Administrator	Read Only User	Control System Account
Username: **`admin`**	Username: **`user`**	Username: **`user`**
Password: **`admin`**	Password: **`user`**	Password: **`password`**

NOTE

- If you are logging in for the first time using the administrator account, the Web Interface Utility makes you change the default passwords for all three accounts (for security purposes, you cannot use the defaults for this forced change) and makes you configure the system time settings. For more information, see Configuring Passwords, on page 99.
- If you have previously changed the username and password for any of the accounts, log in with the new settings.
- External devices access your RackLink's serial API through the Control System account. This account is not used to access the web interface.
- If you are still unable to connect to the web interface, see Troubleshooting, on page 111.

5. Enter the credentials for the account you wish to use.
6. Click **Login**.

   The Dashboard appears.

   Every screen of the web interface includes your connected RackLink device's name and model number, and firmware version with the facility code.

©2026 | Legrand AV Inc, Inc. All rights reserved.

NOTE The Administrator Settings menu only appears when logged in using the Admin account. For more information, see Configuring Administrator Settings, on page 71.

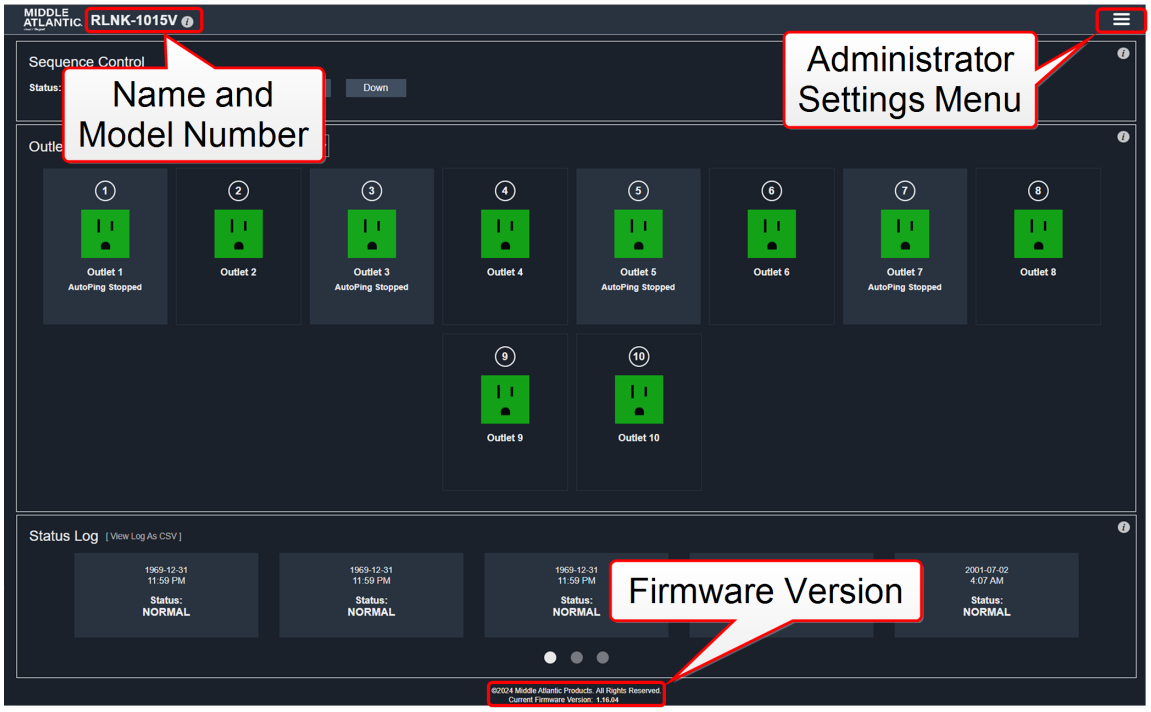

- Some screenshots have been slightly modified to improve legibility.
- The number of outlets appearing on the Dashboard is model specific. For more information, see Understanding RackLink Model Feature Sets, on page 44.
- The device name can be modified in the Administrator Settings. For more information, see Configuring Administrator Settings, on page 71.

Understanding System Confirmations

While interacting with your device using the web interface, you'll notice the following types of system feedback.

©2026 | Legrand AV Inc, Inc. All rights reserved.

- Warnings appear as a prompt in the upper, middle part of the screen.

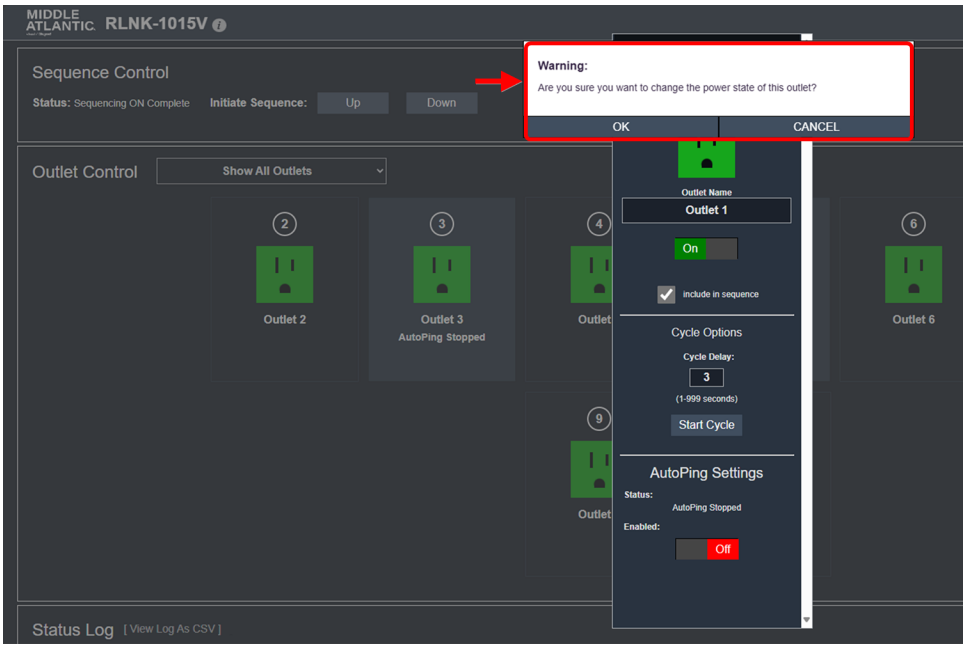

- Error notifications appear in a bar that comes down from the top of the screen.

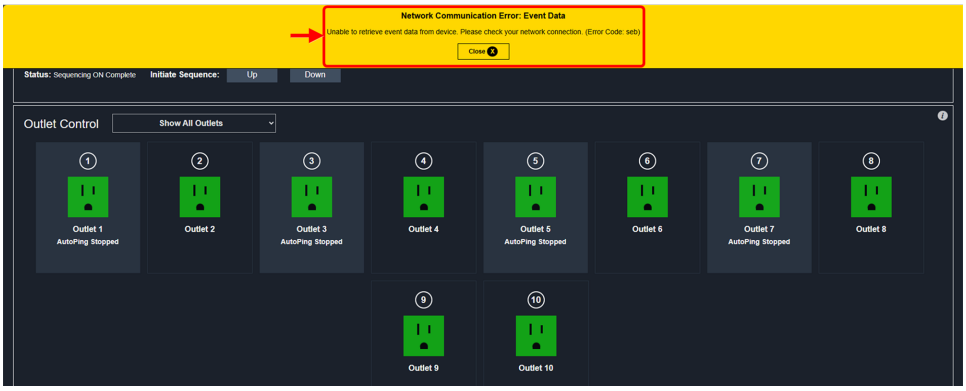

- Messages in a box on the upper-right corner of the screen indicate that an action you performed was successful.

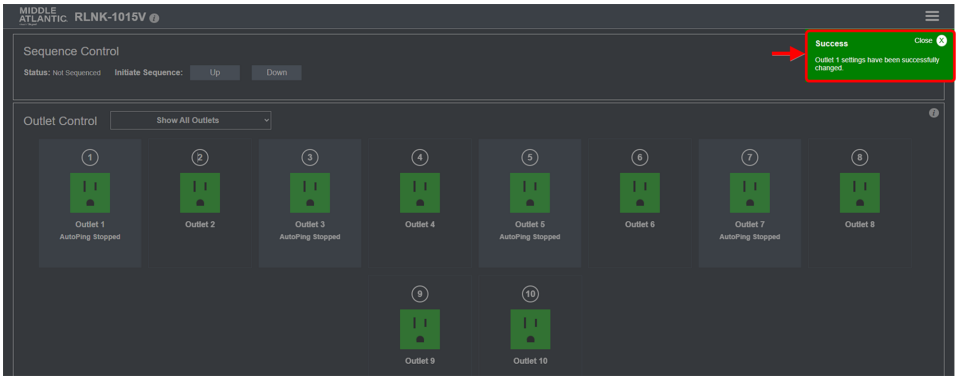

©2026 | Legrand AV Inc, Inc. All rights reserved.

- Input validation is performed on all text input fields. The system highlights the field in red and provides a warning indicating the requirements for submitting a proper text input field value.

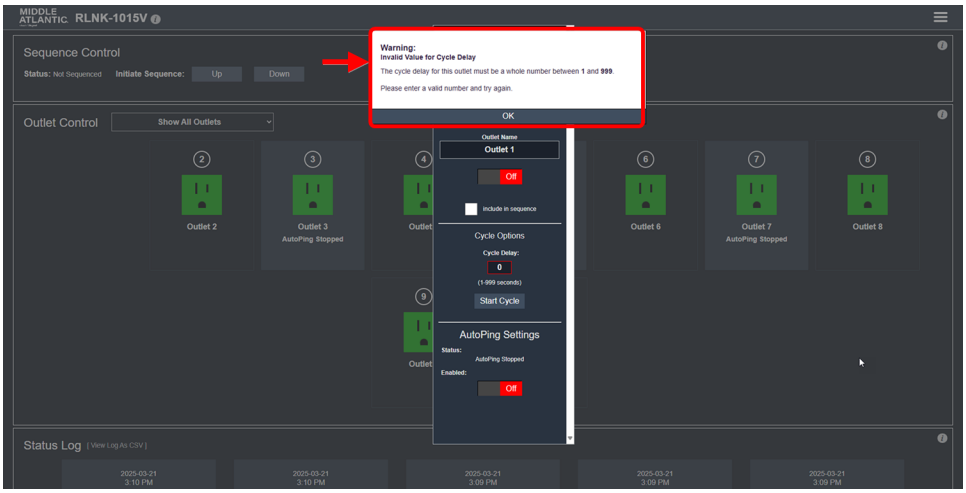

Viewing Help Information

1. Use the RackLink Discovery Tool and connect to a RackLink device.

   For more information, see Using the RackLink Discovery Tool on a PC, on page 1.

2. Enter the credentials for the account you wish to use.

   For more information, see Accessing the Web Interface, on page 54.

3. Click an Information icon.

   The corresponding help information appears.

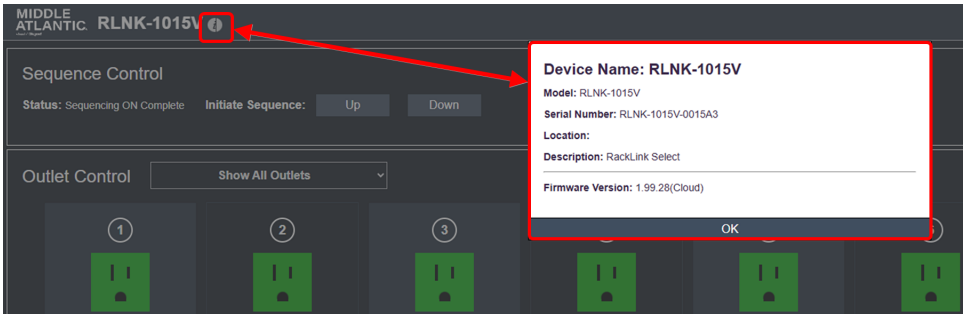

4. Click **OK**.

Viewing and Configuring Information on the Dashboard

The Dashboard is the main interface and includes Sequence Control, Outlet Control, and Status Log sections.

©2026 | Legrand AV Inc, Inc. All rights reserved.

Initiating a Sequence

1. Use the RackLink Discovery Tool and connect to a RackLink device.

   For more information, see Using the RackLink Discovery Tool on a PC, on page 1.

2. Enter the credentials for the account you wish to use.

   For more information, see Accessing the Web Interface, on page 54.

3. View the sequence status information as follows:

   - View the Status field to see the current sequence state. With sequencing disabled, the field shows "Not Sequenced" .

     If sequencing has not been initiated or if any sequenced outlet has changed state, the field shows "Not Sequenced" . Otherwise, one of the following statuses appear in this field:

     - Sequencing ON in Progress
     - Sequencing ON Complete
     - Sequencing OFF in Progress
     - Sequencing OFF Complete

4. Use the Initiate Sequence buttons to start a sequence as follows:

   - Click **Up** or **Down** to initiate a sequence to activate or deactivate the outlets (depending on the initial state of the outlets on your RackLink unit).

   Select Up or Down, and then adjust the delay.

©2026 | Legrand AV Inc, Inc. All rights reserved.

- In the Delay field, enter a delay value (in seconds) for the amount of time you wish to elapse between each controlled outlet in the sequence. The set delay time applies to all sequenced outlets and can be set from 0 - 255 seconds.

- Click **Initiate** after setting the delay.

Configuring Outlet Controls

1. Use the RackLink Discovery Tool and connect to a RackLink device.

   For more information, see Using the RackLink Discovery Tool on a PC, on page 1.

2. Enter the credentials for the account you wish to use.

   For more information, see Accessing the Web Interface, on page 54.

   The Dashboard appears.

3. At the top of the Outlet Control section of the screen, the outlet drop-down provides the following viewing choices:

   - Show All Outlets
   - Show In Sequence Outlets Only
   - Show AutoPing Enabled Outlets Only
   - Show Controlled Outlets Only

©2026 | Legrand AV Inc, Inc. All rights reserved.

4. Click a controlled outlet under the outlet drop-down to access the following additional outlet settings

NOTE Outlet, Cycle Option, and AutoPing settings all appear on a single outlet dialog. For clarity, respective steps in this topic explain how each setting is used.

- The Number indicates the outlet number on your RackLink device.
- In the Device name field, modify the device name, as desired.

NOTE Number and Device name are shown for Always On outlets. Controlled outlets have additional options as explained in the remainder of this topic.

- Use the On/Off switch to activate or deactivate the controlled outlet, as desired.

NOTE Vertical RackLink models (RLNK-1015V and RLNK-1615V) start with a controlled outlet and then alternate with always on outlets down the unit. The dashboard shows the alternating controlled outlets.

©2026 | Legrand AV Inc, Inc. All rights reserved.

On the RLNK-1015V model, shown below, the last three outlets are always on.

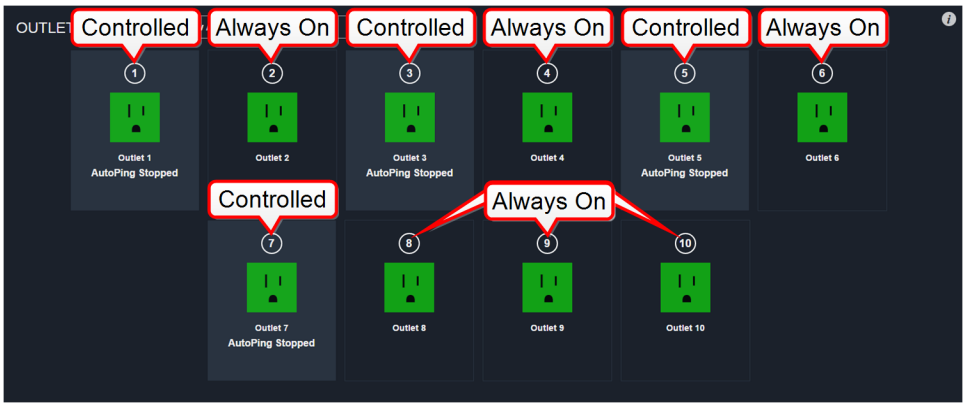

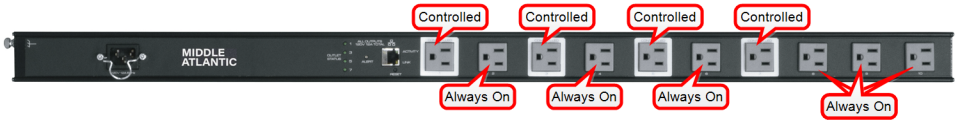

- Select the Include in Sequence check box to include or exclude the specific controlled outlet as part of the overall sequence. This option is selected by default.

5. The following cycle option settings appear in the Cycle Options section:

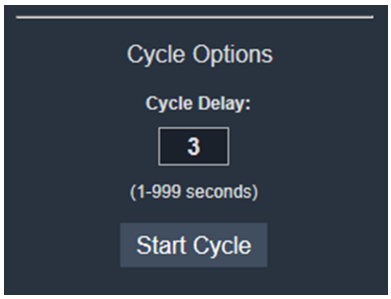

NOTE Outlet, Cycle Option, and AutoPing settings all appear on a single outlet dialog. For clarity, respective steps in this topic explain how each setting is used.

- In the Cycle Delay field, enter a cycle delay value (1 - 999 seconds with a 3 second default), as desired.
- Click **Start Cycle** to cycle the outlet power one time only when the outlet is on.

NOTE New commands received on a given outlet will override the cycle command.

©2026 | Legrand AV Inc, Inc. All rights reserved.

6. The following AutoPing settings appear in the AutoPing section.

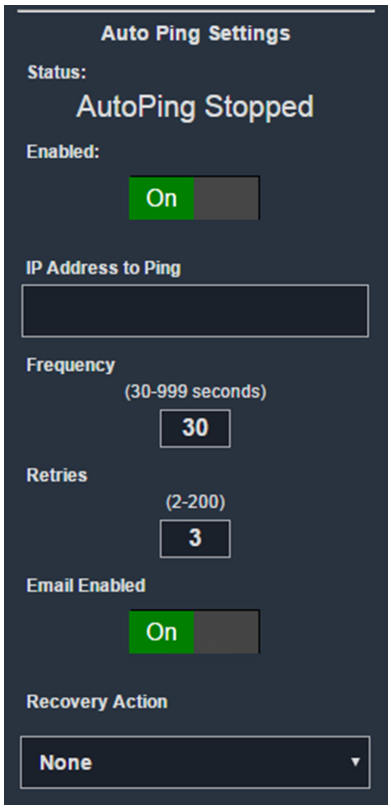

NOTE Outlet, Cycle Option, and AutoPing settings all appear on a single outlet dialog. For clarity, respective steps in this topic explain how each setting is used.

- AutoPing settings may be used to configure your RackLink device to automatically Ping another IP address and create actions in the event of a failure.
- In the Status display field, view the current status of communication between your Ping device and your RackLink device outlet. You can see the status from the dashboard and in the outlet details. The statuses and corresponding text color indicate the following:
  - AutoPing Replied (Green)
  - AutoPing Failed (Red)
  - AutoPing not started (White)
  - Attempting communication... (White)
  - Starting AutoPing... (White)
  - Stopping AutoPing... (White)

©2026 | Legrand AV Inc, Inc. All rights reserved.

- AutoPing Stopped (White)
- No status (White)

> **NOTE** The Alert LED is red if any outlet has a failed AutoPing, or green if all outlets indicate AutoPing replied.

- In the IP Address field, enter the IP address of the Ping device.
- In the Enabled field, select to turn AutoPing On or Off for the specific outlet.
- In the Frequency field, enter how often (in seconds) your RackLink device initiates an AutoPing. You can configure 30 - 999 seconds and the default is 30.
- In the Retries field, enter the number of times your RackLink device will Ping the preset address if no response is received. You can configure 2 - 200 retries and the default is 3. For example, using the default settings with a Frequency of 30 seconds and three Failures, the device being Pinged would need to be offline for 90 seconds before the recovery action is executed.
- In the Email Enabled field, select to turn email notifications On or Off for the specific AutoPing from your outlet.

  For more information, see Configuring Email Settings, on page 86.
- In the Recovery Action drop-down field, select a desired outlet action while the configured Ping device does not reply. The actions cease whenever the Ping device does reply. The actions include the following:
  - Power-cycle Until Recovery
  - Power-cycle Once
  - Power Off Pending Recovery
  - Power Off
  - Power On Pending Recovery
  - Power On

> **NOTE** Only one action per outlet can be performed at a time.

- In the Cycle Time field, enter a cycle time delay value (in seconds) for the specific AutoPing recovery action. You can configure the delay to be between 1 - 999 (inclusive) seconds and the default is 3.

©2026 | Legrand AV Inc, Inc. All rights reserved.

NOTE The Cycle Time option only appears when the Power-cycle Until Recovery action is selected.

7. Click **Save**.

TIP To restore the default settings, see Restoring Factory Defaults, on page 90.

Viewing Status Log Information

1. Use the RackLink Discovery Tool and connect to a RackLink device.

   For more information, see Using the RackLink Discovery Tool on a PC, on page **1**.

2. Enter the credentials for the account you wish to use.

   For more information, see Accessing the Web Interface, on page 54.

   The Dashboard appears.

   The Status Log section of the screen includes log entries for events taking place in your RackLink device.

   NOTE Click the circles to scroll horizontally and access any additional logs.

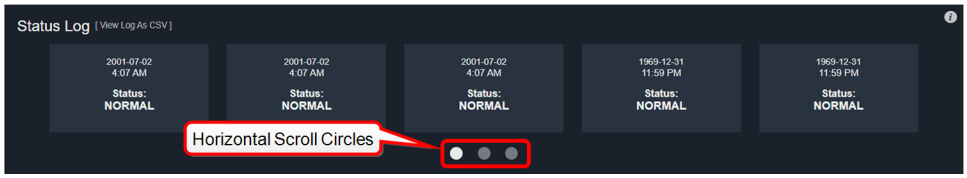

3. Logs shown on the dashboard provide the following data:
   - Date, Time, and Status (of the log event).

     Log entry statuses indicate the following reasons:
     - Normal Event
     - AutoPing Fault
     - AutoPing Recovery

4. Click a log entry to view log entry details.

©2026 | Legrand AV Inc, Inc. All rights reserved.

- The date, time and status appear on the details screen.
- The outlet that changed is listed and visually highlighted on the details screen.
- The Room Occupancy field shows the current occupancy status as set by the control system.
- Select the Include in Sequence check box to include or exclude the specific controlled outlet as part of the overall sequence. This option is selected by default.

5. Click the **View Log As CSV** link to download a file containing all the log details for your device.

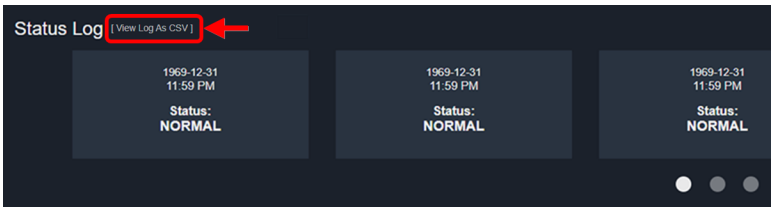

6. Adjust your log details view from the following options:
   - Select the Outlet Status option to show the state of each outlet at the time of the event. The highlighted outlet is the one changed by the specific event.

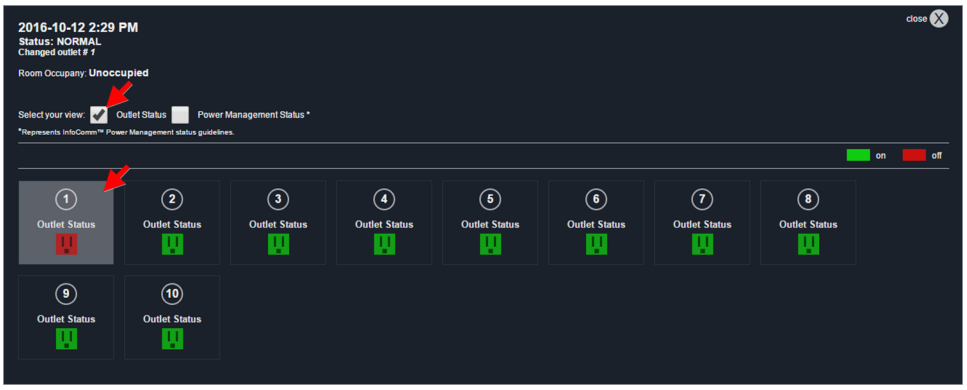

The Outlet statuses are as follows:

- On
- Off

©2026 | Legrand AV Inc, Inc. All rights reserved.

- Select the Power Management Status option to view the InfoComm™ Power Management Statuses at the time of the event.

The InfoComm Power Management Statuses are as follows:

- On
- Off
- Cycle/Standby
- Disconnected
- Unknown

> **NOTE** For more information about the InfoComm Audiovisual Systems Energy Management Standard, refer to https://www.avixa.org/standards/energy-management-for-audiovisual-systems.

- Select the Include in Sequence check box to include or exclude the specific controlled outlet as part of the overall sequence. This option is selected by default.

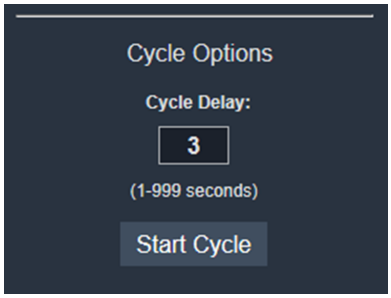

©2026 | Legrand AV Inc, Inc. All rights reserved.

NOTE Outlet, Cycle Option, and AutoPing settings all appear on a single outlet dialog. For clarity, respective steps in this topic explain how each setting is used.

- In the Cycle Delay field, enter a cycle delay value (1 - 999 seconds with a 3 second default), as desired.
- Click **Start Cycle** to cycle the outlet power one time only when the outlet is on.

NOTE New commands received on a given outlet will override the cycle command.

7. The following AutoPing settings appear in the AutoPing section.

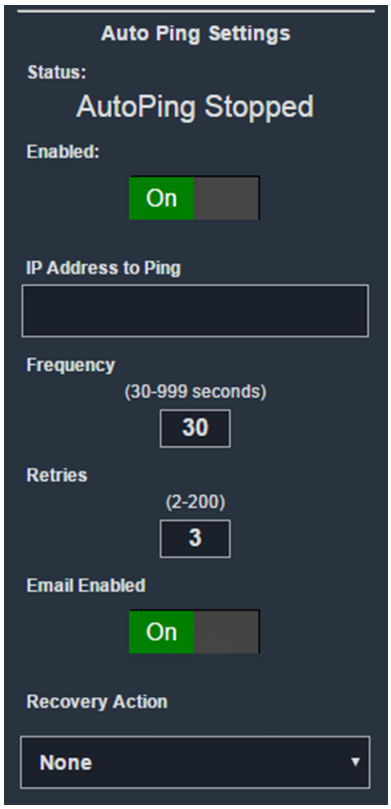

NOTE Outlet, Cycle Option, and AutoPing settings all appear on a single outlet dialog. For clarity, respective steps in this topic explain how each setting is used.

- AutoPing settings may be used to configure your RackLink device to automatically Ping another IP address and create actions in the event of a failure.

©2026 | Legrand AV Inc, Inc. All rights reserved.

- In the Status display field, view the current status of communication between your Ping device and your RackLink device outlet. You can see the status from the dashboard and in the outlet details. The statuses and corresponding text color indicate the following:
  - AutoPing Replied (Green)
  - AutoPing Failed (Red)
  - AutoPing not started (White)
  - Attempting communication... (White)
  - Starting AutoPing... (White)
  - Stopping AutoPing... (White)
  - AutoPing Stopped (White)
  - No status (White)

> **NOTE** The Alert LED is red if any outlet has a failed AutoPing, or green if all outlets indicate AutoPing replied.

- In the IP Address field, enter the IP address of the Ping device.
- In the Enabled field, select to turn AutoPing On or Off for the specific outlet.
- In the Frequency field, enter how often (in seconds) your RackLink device initiates an AutoPing. You can configure 30 - 999 seconds and the default is 30.
- In the Retries field, enter the number of times your RackLink device will Ping the preset address if no response is received. You can configure 2 - 200 retries and the default is 3. For example, using the default settings with a Frequency of 30 seconds and three Failures, the device being Pinged would need to be offline for 90 seconds before the recovery action is executed.
- In the Email Enabled field, select to turn email notifications On or Off for the specific AutoPing from your outlet.

  For more information, see Configuring Email Settings, on page 86.
- In the Recovery Action drop-down field, select a desired outlet action while the configured Ping device does not reply. The actions cease whenever the Ping device does reply. The actions include the following:
  - Power-cycle Until Recovery
  - Power-cycle Once

©2026 | Legrand AV Inc, Inc. All rights reserved.

- Power Off Pending Recovery
- Power Off
- Power On Pending Recovery
- Power On

> **NOTE** Only one action per outlet can be performed at a time.

- In the Cycle Time field, enter a cycle time delay value (in seconds) for the specific AutoPing recovery action. You can configure the delay to be between 1 - 999 (inclusive) seconds and the default is 3.

> **NOTE** The Cycle Time option only appears when the Power-cycle Until Recovery action is selected.

8. Click **Save**.

> **TIP** To restore the default settings, see Restoring Factory Defaults, on page 90.

Configuring Administrator Settings

Features on the Administrator Settings menu include RackLink Cloud Settings, Date/Time, Device Settings, Email, Factory Defaults, Firmware Update, Network, and Passwords.

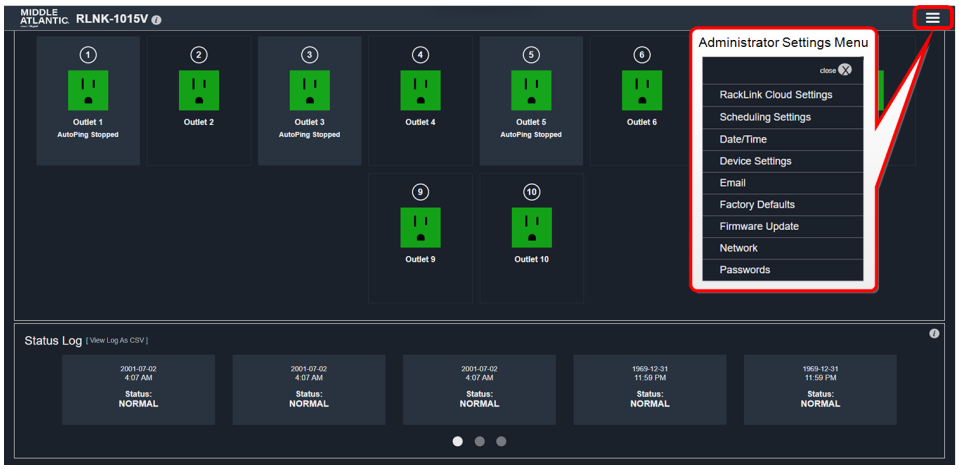

©2026 | Legrand AV Inc, Inc. All rights reserved.

Logging in to the Administrator Settings Menu

NOTE The Administrator Settings menu is only accessible when logged in using the Admin account. If you are logged into the User account, the Administrator Settings menu still appears in the upper-right corner of the screen, however, you are prompted to log in using the Admin account after clicking any of the options.

1. Use the RackLink Discovery Tool and connect to a RackLink device.

   For more information, see Using the RackLink Discovery Tool on a PC, on page 1.

2. Log in using the Admin account to access the Administrator Settings menu.

   For more information, see Accessing the Web Interface, on page 54.

   The Dashboard appears.

3. You can now access the Administrator Settings menu on the upper-right side of the screen.

NOTE When you select Administrator Setting menu items, corresponding screens fly-in from the left side of the Dashboard.

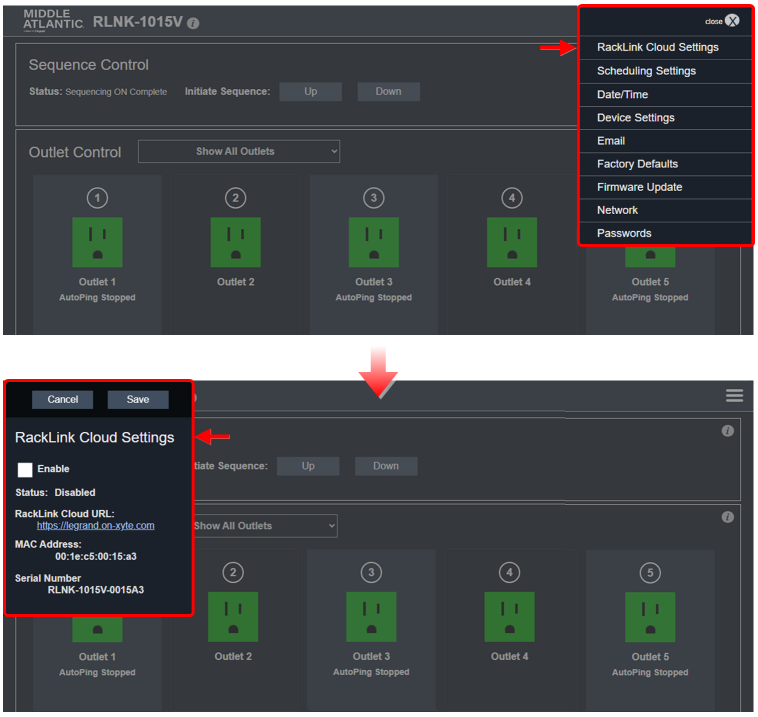

©2026 | Legrand AV Inc, Inc. All rights reserved.

Understanding the RackLink Cloud Service

RackLink Cloud, built on Xyte™, and hosted on Amazon Web Services (AWS), is the premier remote power management system offering device-level control. It enables significant cost savings by eliminating on-site visits for routine tasks. With no extra equipment needed, you can monitor and manage your Select PDU, Premium+™ PDU, and NEXSYS™ UPS devices from anywhere in the world. RackLink Cloud ensures robust data security and privacy, complying with international standards, including GDPR, and follows Privacy by Design principles.

For more details, refer to the following resources:

- The RackLink Cloud product page at https://www.legrandav.com/products/power/intelligent_power/racklink-cloud.
- Xyte's Privacy Policy at https://www.xyte.io/privacy-policy.
- The AWS Cloud Security page at https://aws.amazon.com/security.

RackLink Cloud Network Requirements

- Your RackLink device must have an outgoing connection via the Ethernet port. For more information, see Understanding RackLink Model Feature Sets, on page 44.
- Outgoing connections accessing RackLink Cloud services require SSL port 443 enabled for all *.xyte.io domains.
- Devices without direct internet access must use a proxy server when connecting to *.xyte.io domains.
- Any network restrictions on these domains may result in RackLink Cloud communication issues.

For more information, contact support at success@xyte.io, support at av.middleatlantic.techsupport@legrand.com or (866) 977-3901.

©2026 | Legrand AV Inc, Inc. All rights reserved.

Enabling, Registering, and Claiming Your Device in the Cloud

Use the following steps to enable Cloud Services on your PDU. Then, use the PDU device information displayed on the screen when accessing the RackLink Cloud website (link also displayed on the screen), creating a customer account, and claiming your device in the cloud system.

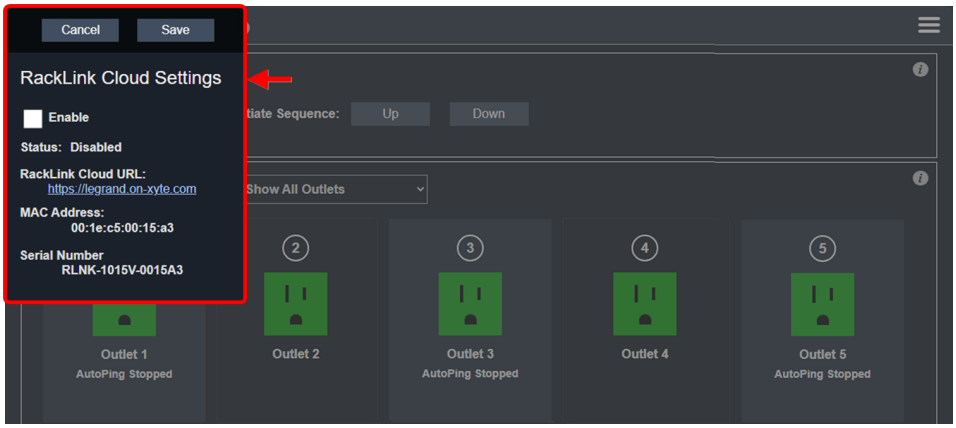

1. Use the RackLink Discovery Tool and connect to a RackLink device.

   For more information, see Using the RackLink Discovery Tool on a PC, on page 1.

2. Log in using the Admin account to access the Administrator Settings menu.

   For more information, see Accessing the Web Interface, on page 54.

3. Click **RackLink Cloud Settings** on the Administrator Settings menu.

   The RackLink Cloud Settings screen appears.

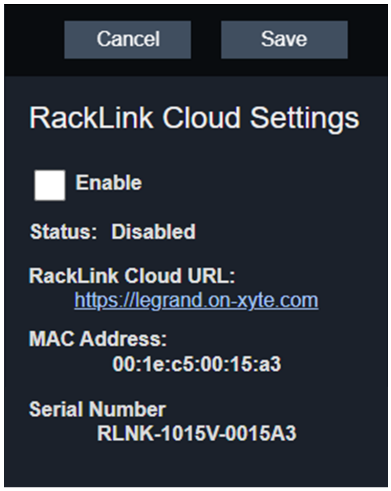

4. Select the **Enable** check box to enable the cloud service on your PDU.

©2026 | Legrand AV Inc, Inc. All rights reserved.

5. The Status section of the screen initially appears with a Disabled status. Once the Enable check box is selected, this field displays different statuses for your cloud services connection as follows:
   - **Disabled**: The Cloud service is disabled on your PDU.
   - **Disconnected**: The Cloud service is enabled on your PDU. Access the RackLink Cloud using the URL provided in the interface at: https://legrand.on-xyte.com and claim your device in the cloud system.
   - **Connected**: The Cloud service is enabled on your PDU, and your device is claimed from and connected to the cloud system.
6. Notice the displayed MAC Address and Serial Number of your PDU for easy reference when claiming your device in the RackLink Cloud system.

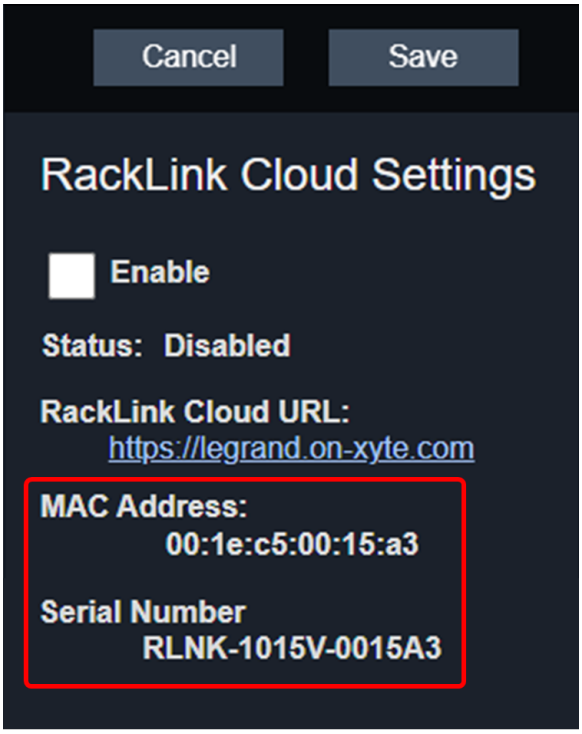

7. Click **Save**.
8. Click the RackLink Cloud URL at https://legrand.on-xyte.com to access the system, register, and claim your device.

©2026 | Legrand AV Inc, Inc. All rights reserved.

The RackLink Cloud sign in screen appears.

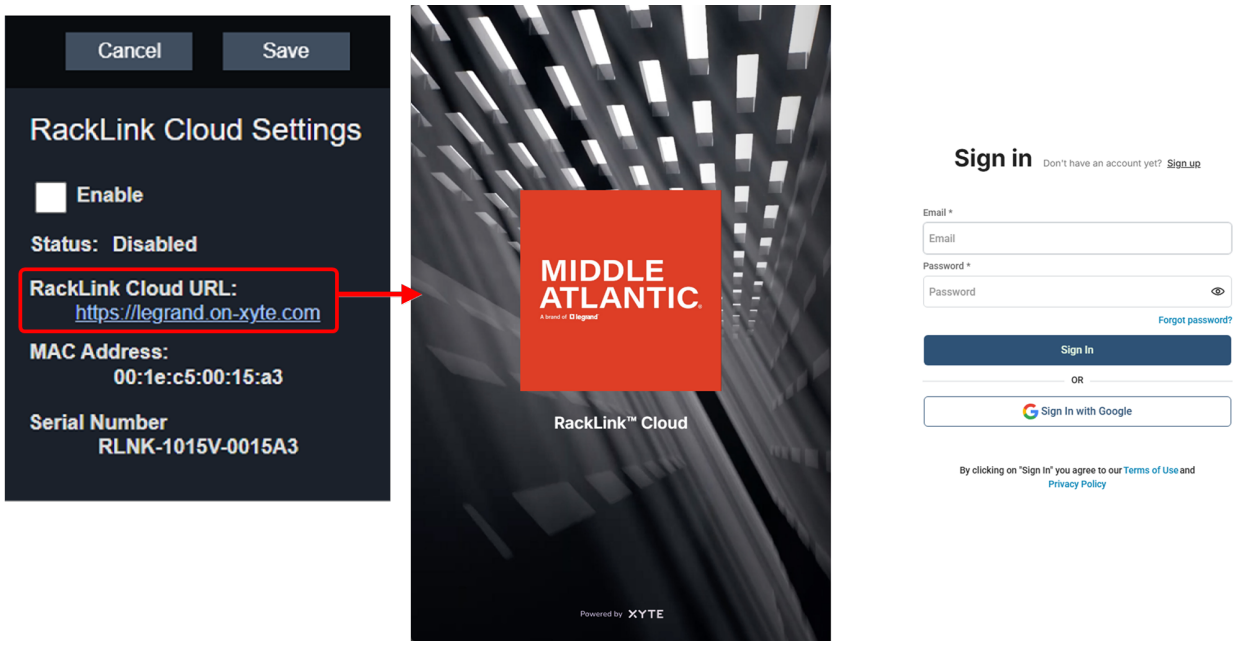

9. Click the Sign up link on the upper-right section of the screen.

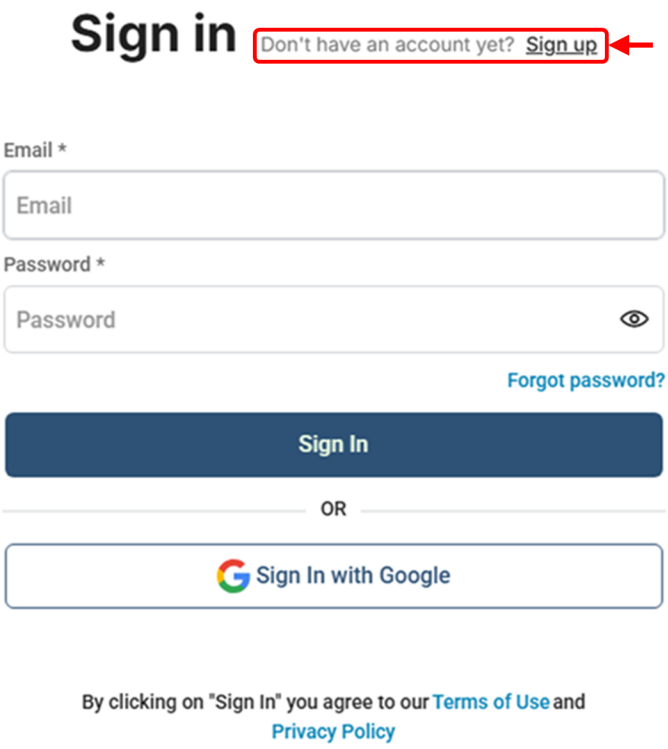

The RackLink Cloud sign up screen appears.

©2026 | Legrand AV Inc, Inc. All rights reserved.

10. Provide an email address or use a Google account, as desired, and click **Continue with email** or **Continue with Google**, accordingly.

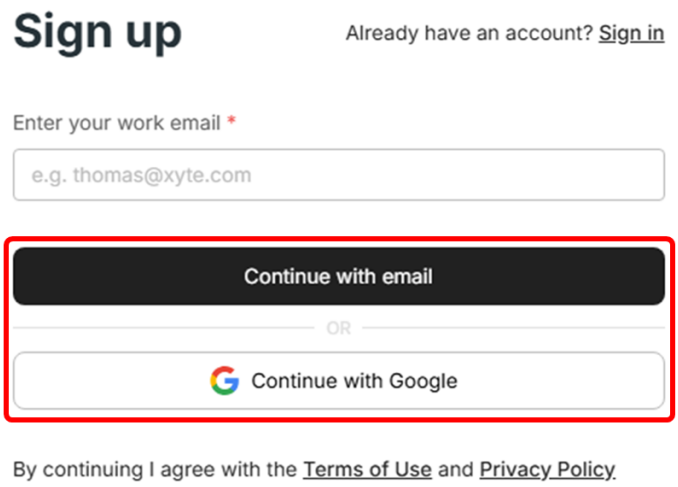

11. The system asks you to name your organization. In the Organization name field, provide an organization name, as desired, and click **Continue**.

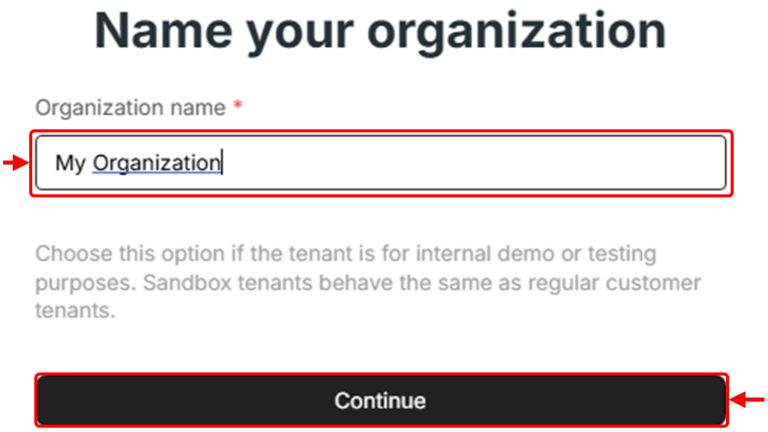

12. The system then asks you to invite teammates to your RackLink Cloud organization.

©2026 | Legrand AV Inc, Inc. All rights reserved.

If you wish to invite teammates, provide values in the Teammate email address and Select role fields, as desired, and click **Send Invitation**.

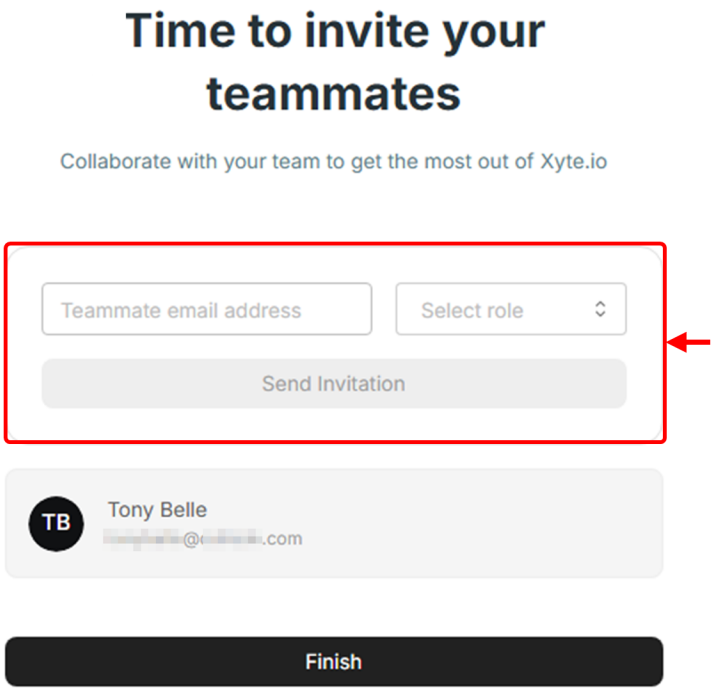

13. Provide teammate email addresses and assign roles, if desired.
14. Click **Finish**.

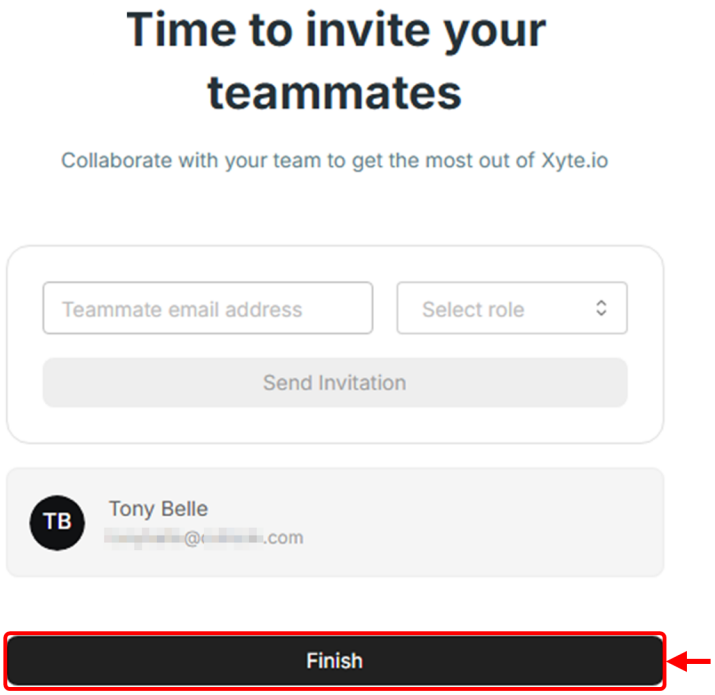

©2026 | Legrand AV Inc, Inc. All rights reserved.

The RackLink Cloud Overview screen for your organization appears.

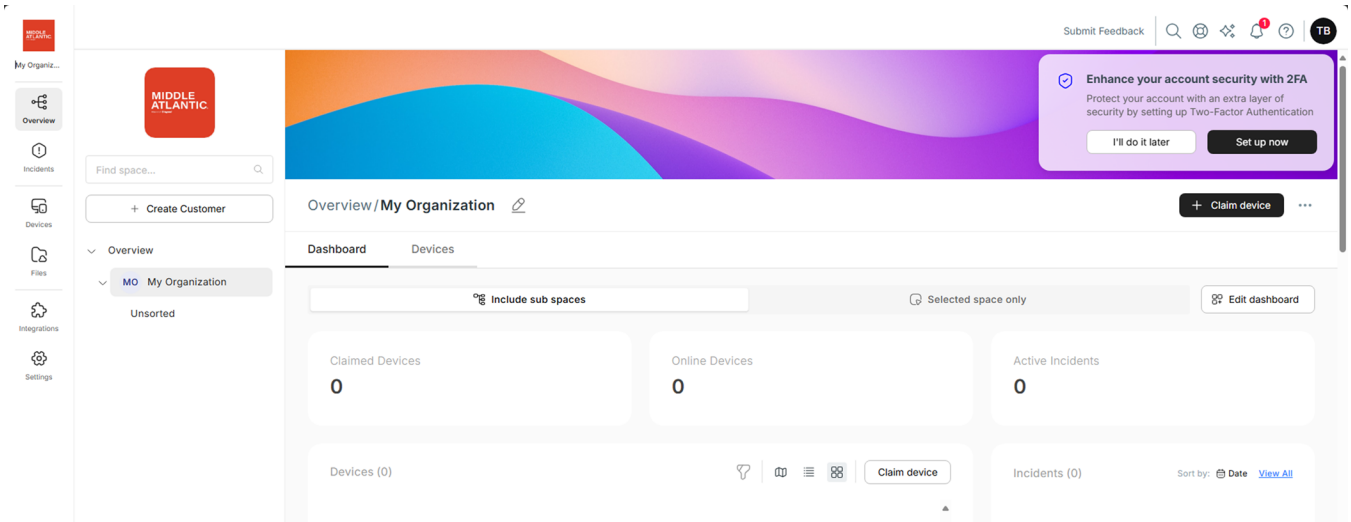

15. Click **Claim device** in the upper-right corner of the screen.

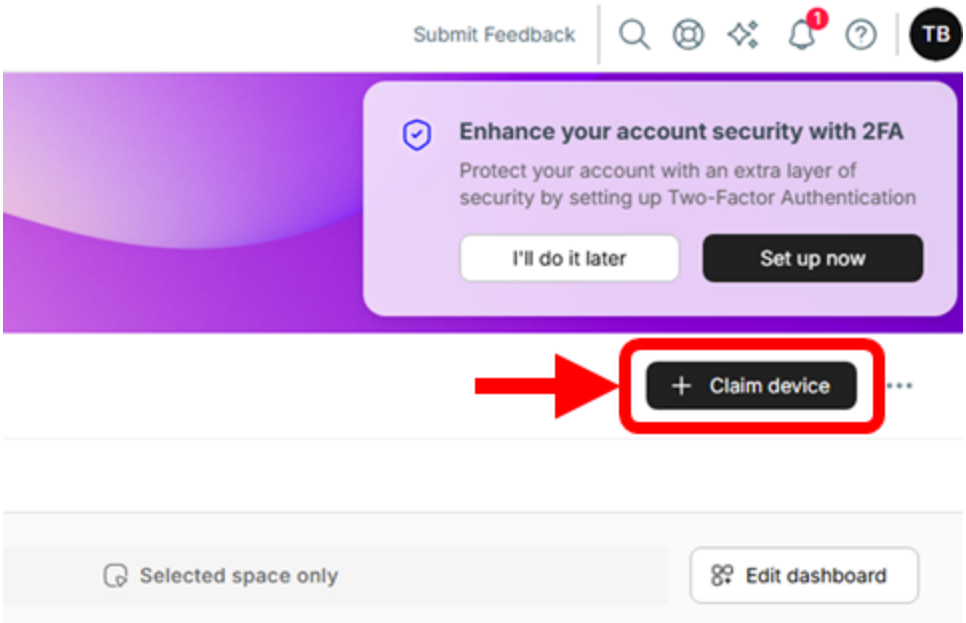

The Add device to space screen appears.

©2026 | Legrand AV Inc, Inc. All rights reserved.

16. Click the **Change space** link to change the organization, if desired.

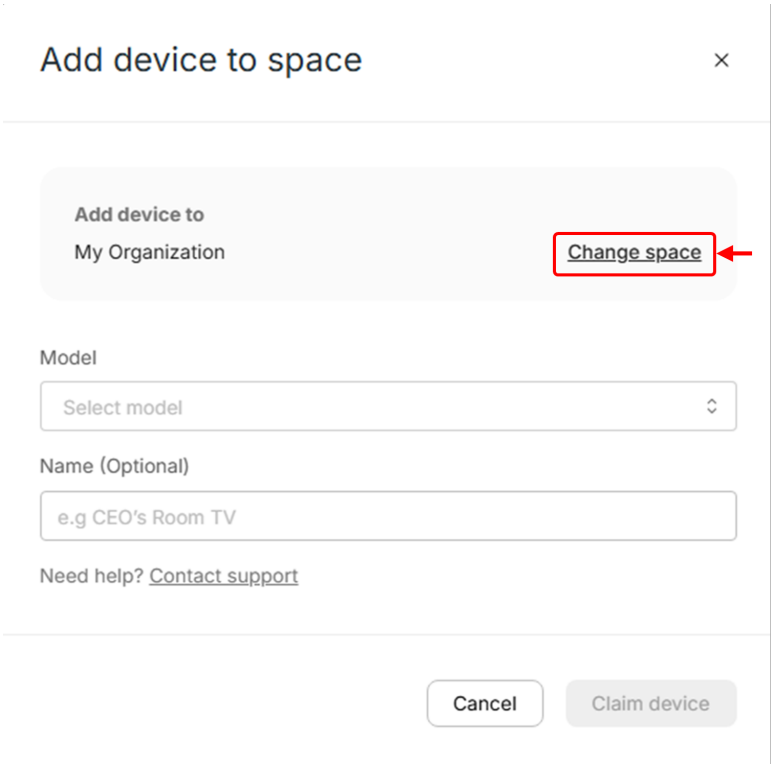

17. Click the **Model** drop-down and select your specific device from the list.

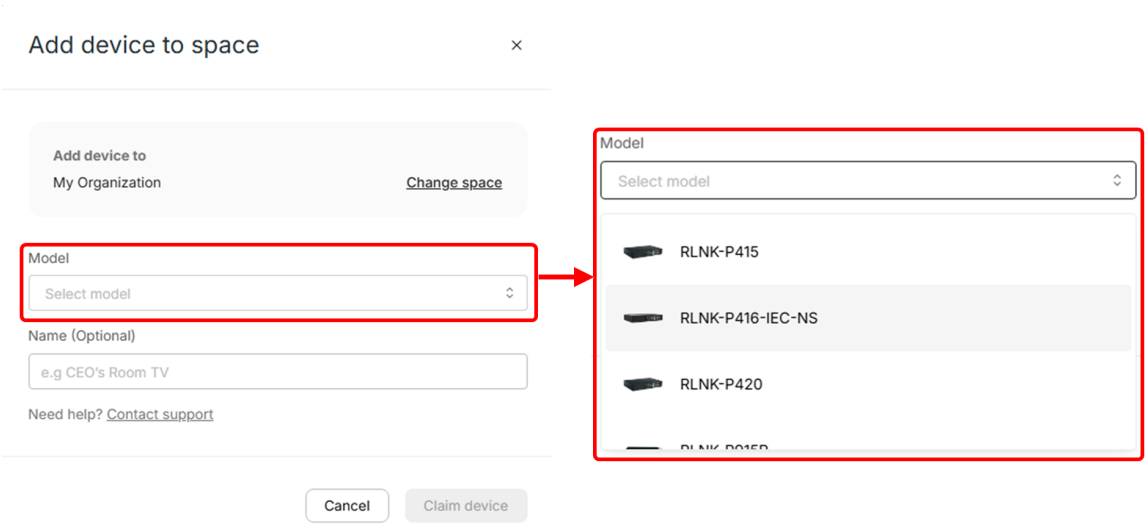

©2026 | Legrand AV Inc, Inc. All rights reserved.

18. After selecting your model, provide entries in the **MAC Address** and **Serial Number** fields using the values you noted from your device firmware earlier in this topic.

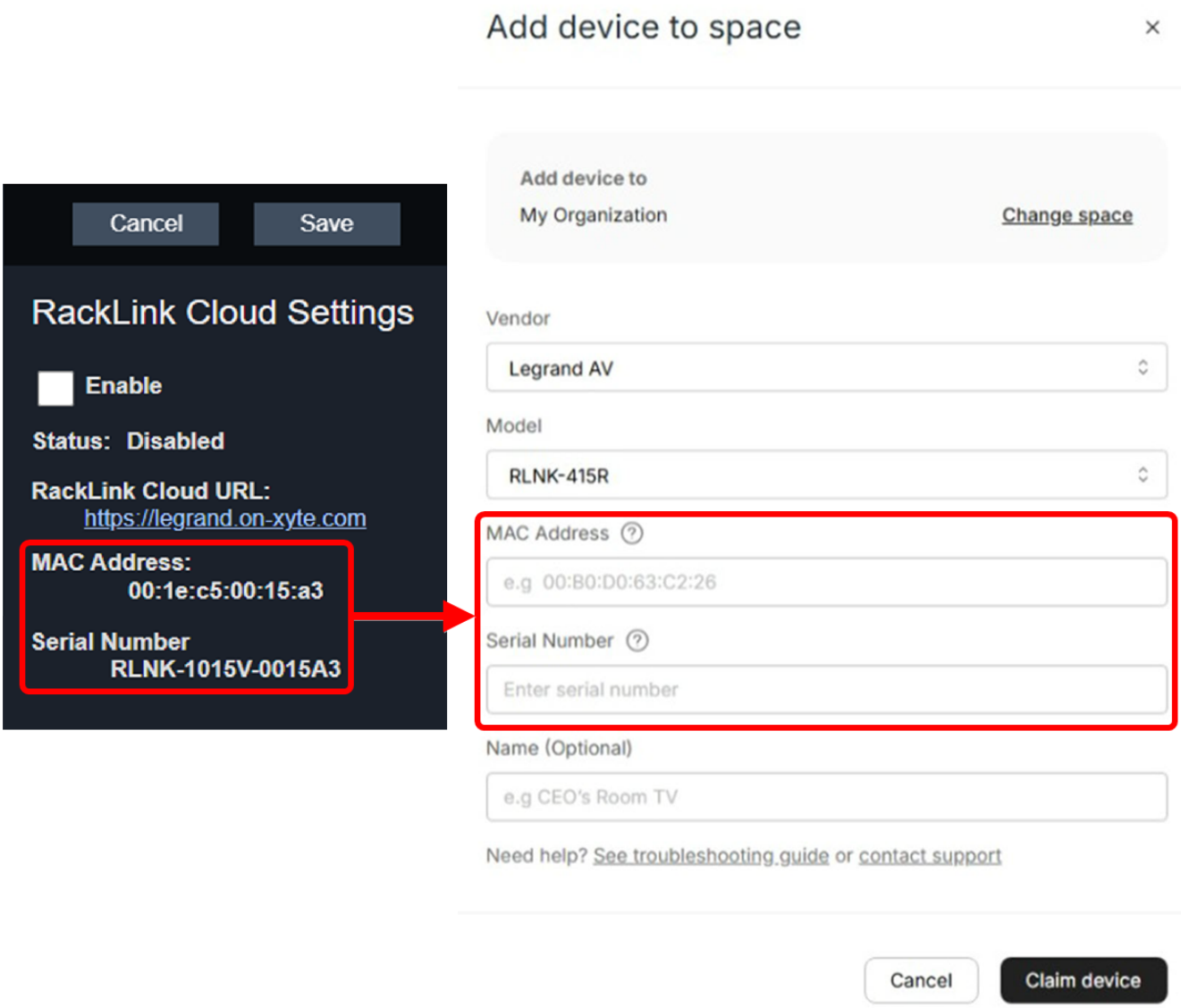

©2026 | Legrand AV Inc, Inc. All rights reserved.

19. Enter a logical name in the **Name** field, as desired and click **Claim device**.

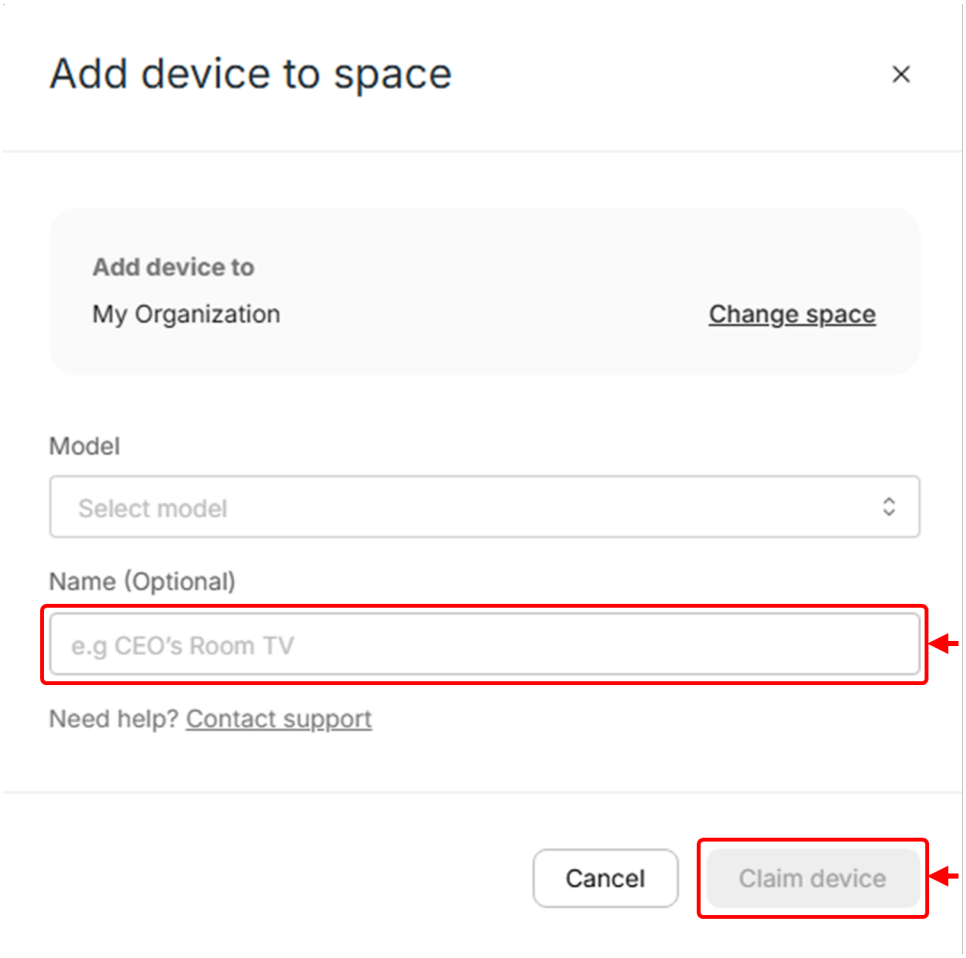

Your device appears on your Overview page.

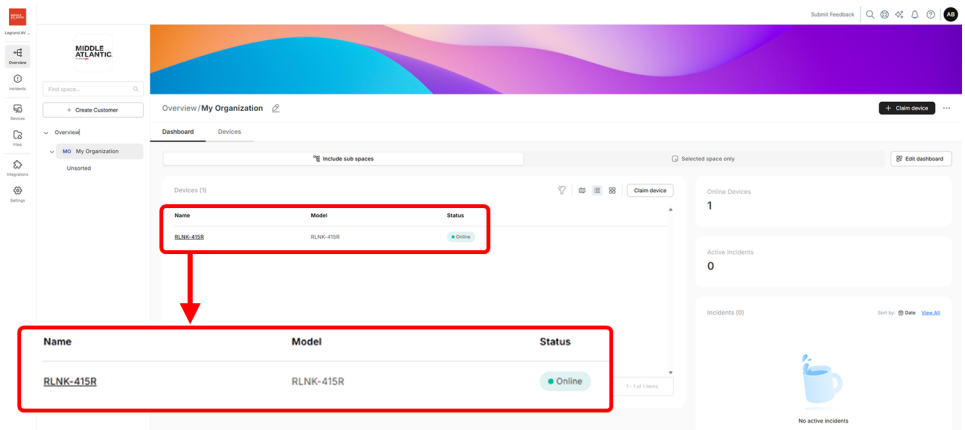

©2026 | Legrand AV Inc, Inc. All rights reserved.

For information about RackLink Cloud services, refer to the Select PDU with RackLink product page at www.legrandav.com, contact support at av.middleatlantic.techsupport@legrand.com or (866) 977-3901, and refer to additional RackLink Cloud documentation at https://docs.xyte.io, including the following topics:

- **Sign up**: https://docs.xyte.io/docs/sign-up
- **Claim you first device**: https://docs.xyte.io/docs/first-device
- **Asset management**: https://docs.xyte.io/docs/devices

Configuring Date/Time Settings

1. Use the RackLink Discovery Tool and connect to a RackLink device.

   For more information, see Using the RackLink Discovery Tool on a PC, on page 1.

2. Log in using the Admin account to access the Administrator Settings menu.

   For more information, see Accessing the Web Interface, on page 54.

3. Click **Date/Time** on the Administrator Settings menu.

   The Date/Time Settings screen appears.

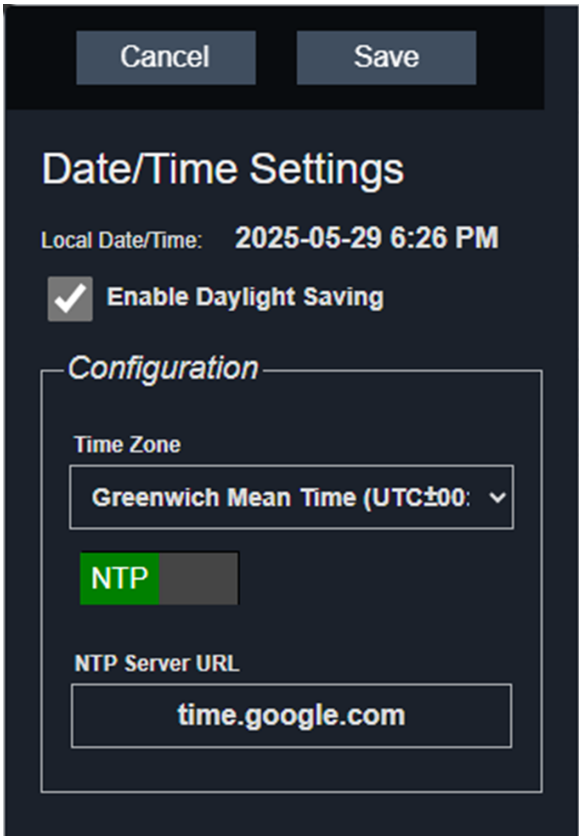

4. The Local Date/Time section of the screen displays the current date and time.

©2026 | Legrand AV Inc, Inc. All rights reserved.

5. Select the **Enable Daylight Saving** check box to enable daylight saving time, if desired.
6. The Configuration area of the screen includes the following:
   a. In the Time Zone drop-down, select your desired time zone.
   b. Selecting NTP or Manual produces different fields as follows:
      - Select **NTP** and the NTP Server URL field remains. Specify an NTP server address of your choice. The default is pool.ntp.org.
      - Select **Manual** and the Date and Time fields appear while the NTP Server URL field is removed. Specify a date and time as desired.

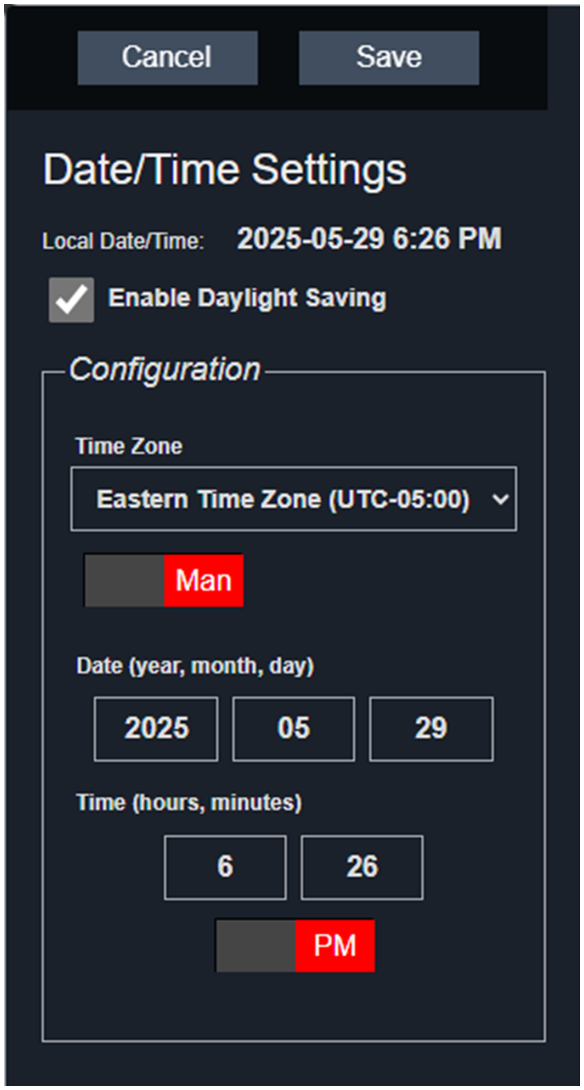

7. Click **Save**.

TIP To restore the default settings, see Restoring Factory Defaults, on page 90.

©2026 | Legrand AV Inc, Inc. All rights reserved.

Configuring Device Settings

1. Use the RackLink Discovery Tool and connect to a RackLink device.

   For more information, see Using the RackLink Discovery Tool on a PC, on page 1.

2. Log in using the Admin account to access the Administrator Settings menu.

   For more information, see Accessing the Web Interface, on page 54.

3. Click **Device Settings** on the Administrator Settings menu.

   The Device Settings screen appears.

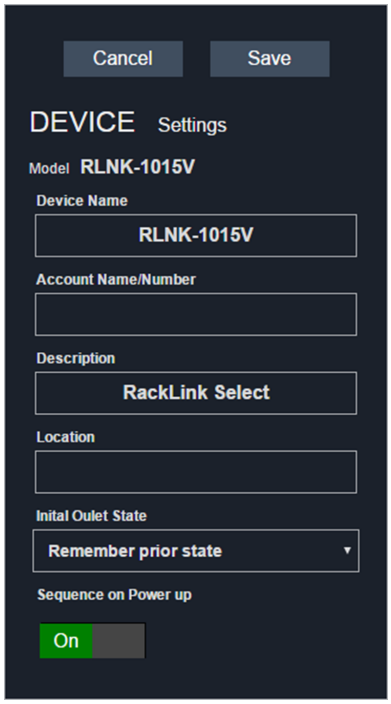

4. Configure the Device Settings screen as follows:
   - In the Device Name field, enter your desired name for your RackLink device. This value appears in the top of the web interface and is shown in the RackLink Discovery Tool.
   - In the Account Name/Number field you may enter a user-defined value for your own reference.
   - In the Device Description field, you may provide a description for your RackLink device.
   - In the Location field, specify a particular location where your RackLink device is kept.
   - In the Initial Outlet State drop down, select from the following values:

©2026 | Legrand AV Inc, Inc. All rights reserved.

- Select **Remember prior state** to have the outlets remain in their prior state
- Select **OFF** to have the outlets Off during power up as their default setting.
- Select **ON** to have the outlets On during power up as their default setting.

> **NOTE** This setting is only applicable to outlets that are not included in sequencing or when Sequence on Power Up is Off. On is the factory default setting for an outlet.

For more information about which outlets are included or excluded from sequencing, see Configuring Outlet Controls, on page 61.

- Turn Sequence on Power Up On or Off to determine whether or not your RackLink device will perform a sequence while powering up. The default setting is On.

  For more information about which outlets are included or excluded from sequencing, see Configuring Outlet Controls, on page 61.

- Click the **Reboot** button.

  The outlets sequence off while your RackLink device reboots. When the system comes back up, the outlets are brought back to their initial state and sequence setting.

5. Click **Save**.

> **TIP** To restore the default settings, see Restoring Factory Defaults, on page 90.

Configuring Email Settings

> **NOTE** If you use Gmail and have two-factor authentication configured, you'll need to create an app password to give your RackLink device permission to access the account. The app password is used in place of your main Gmail password configured later in this topic.
>
> For more information, refer to Google Support at https://support.google.com/accounts/answer/185833?hl=en.

1. Use the RackLink Discovery Tool and connect to a RackLink device.

   For more information, see Using the RackLink Discovery Tool on a PC, on page 1.

©2026 | Legrand AV Inc, Inc. All rights reserved.

2. Log in using the Admin account to access the Administrator Settings menu.

   For more information, see Accessing the Web Interface, on page 54.

3. Click **Email** on the Administrator Settings menu.

   The Email screen appears.

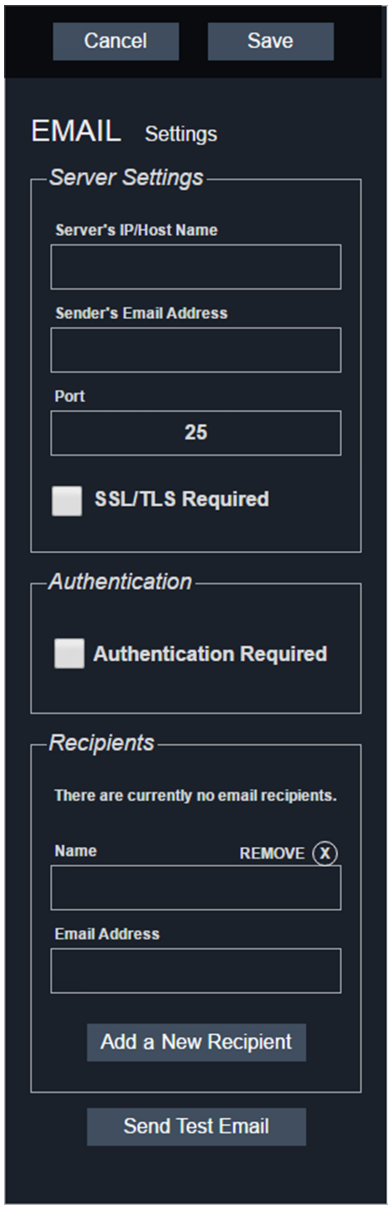

4. Configure the Server Settings section of the screen as follows:
   - In the Server's IP/Host Name field, enter the IP or host name of your mail server.
   - In the Sender's E-mail Address field, enter the email address to appear as the "from" address in emails sent by your RackLink device.

©2026 | Legrand AV Inc, Inc. All rights reserved.

- In the Port field, enter the port you wish to use on your mail server. The default port is 25.

> **NOTE**
> - Ensure that the server name you provide is a fully qualified domain name.
> - Verify you are using the correct port number and verify that your network is not blocking outbound traffic on the port.

- Select the **SSL/TLS** check box if you wish to use SSL/TLS encryption on your server.

5. Select the **Authentication** check box if you wish to require Authentication on your mail server.

   This enables the following fields:

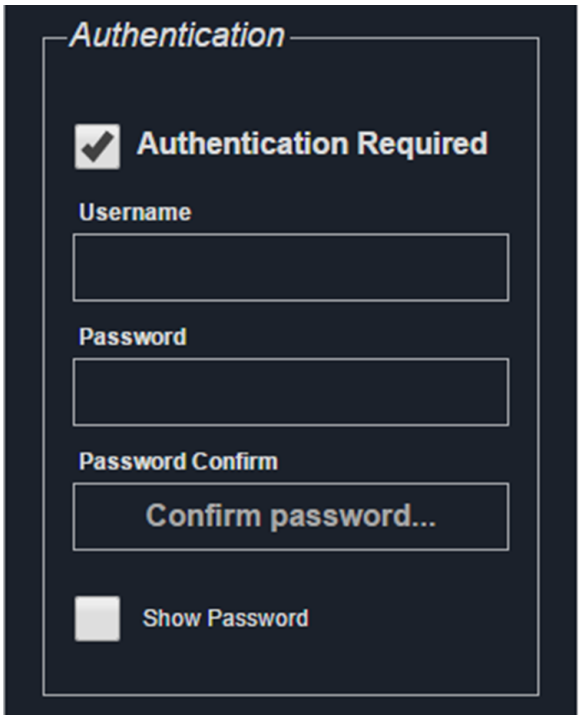

   - In the Username field, enter the user name on your mail server.
   - In the Password field, enter the password on your mail server.
   - In the Confirm Password field, confirm the password on your mail server.
   - Select the **Show Password** check box to remove masking dots and show the password characters as you type them.

6. Click **Add A New Recipient** beneath the Recipients section of the screen to show the following fields:

©2026 | Legrand AV Inc, Inc. All rights reserved.

- Provide Name and Email Address information for up to 5 email recipients.
- Click **Remove** to delete any of the email recipients you entered.
- Edit Name and Email text and click **Save** as desired.
- Status information appears under corresponding email recipients for the following events:
  - PASS

    `Success. Email Sent.`
  - FAIL

    `Failure code ###. SMTP Server could not be resolved.`

    `Failure code ###. The SMTP server connection failed or was prematurely terminated.`

    `Failure. The SMTP return code was ###.`

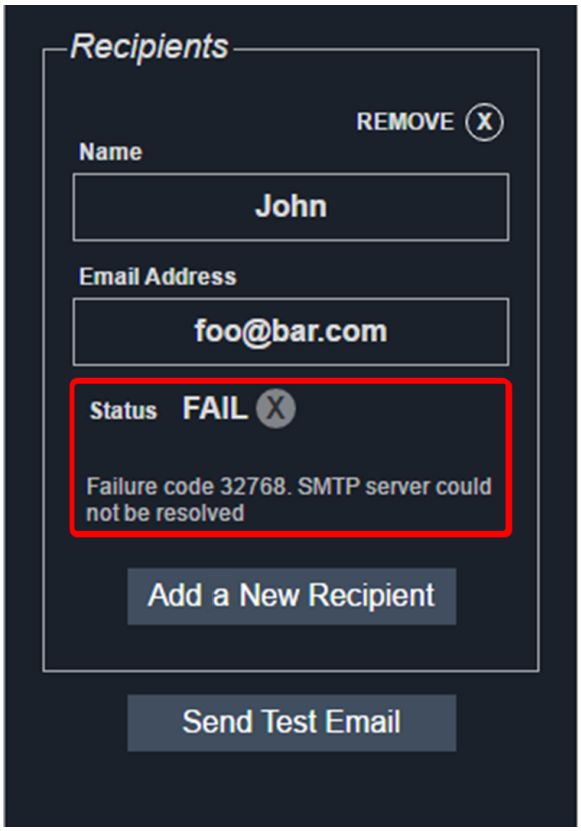

- Click **Send Test Email** to send a test email to each recipient you've saved in the system. This is done to ensure your email alert system is working properly.

7. Click **Save**.

©2026 | Legrand AV Inc, Inc. All rights reserved.

TIP To restore the default settings, see Restoring Factory Defaults, on page 90.

Restoring Factory Defaults

NOTE The Factory Reset button on your RackLink unit resets to DHCP and default passwords. For more information, see Understanding RackLink Model Feature Sets, on page 44. For more information about default password reset on first login, see Accessing the Web Interface, on page 54.

You can select which factory default settings are restored on your RackLink device as follows:

- All
- Restore Event Log
- Restore Outlet Defaults
- Restore AutoPing Defaults
- Restore Date/Time Defaults
- Restore Device Setting Defaults
- Restore Email Defaults
- Restore Password Defaults
- Restore Sequencing Defaults
- Restore Network Defaults
- Restore RackLink Cloud Defaults

1. Use the RackLink Discovery Tool and connect to a RackLink device.

   For more information, see Using the RackLink Discovery Tool on a PC, on page **1**.
2. Log in using the Admin account to access the Administrator Settings menu.

   For more information, see Accessing the Web Interface, on page 54.
3. Click **Factory Defaults** on the Administrator Settings menu.

©2026 | Legrand AV Inc, Inc. All rights reserved.

The Factory Defaults screen appears.

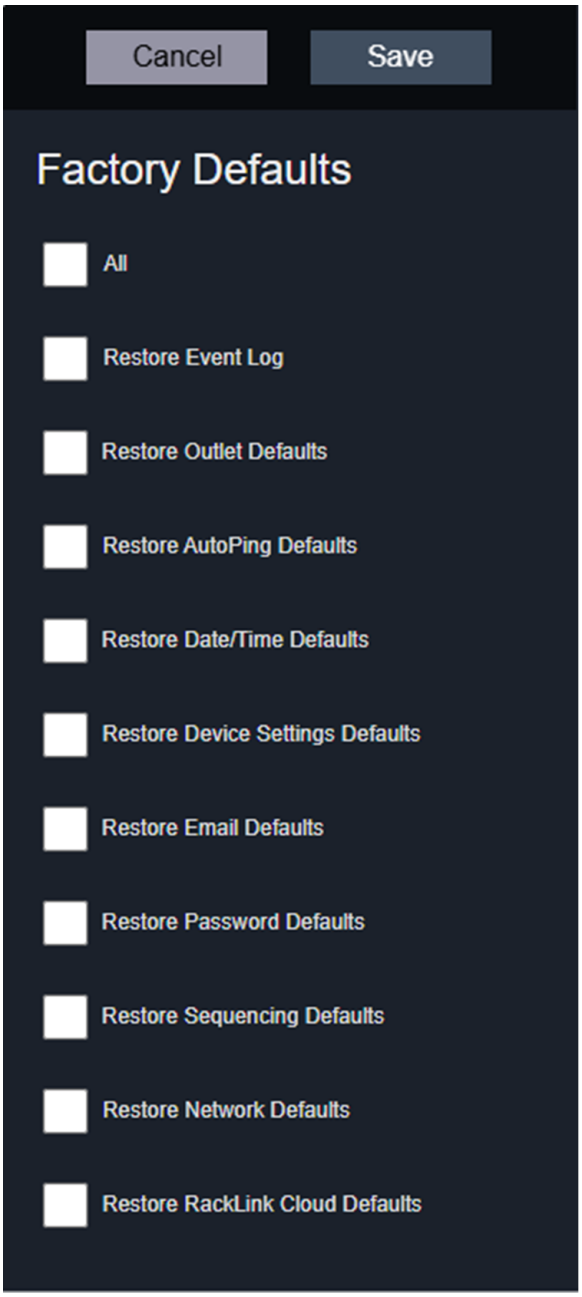

4. Select check boxes for the items you wish to restore on your RackLink device. Select the **All** check box to mark them all with a single click.
5. Click **Save**.

©2026 | Legrand AV Inc, Inc. All rights reserved.

Updating Device Firmware

NOTE

If you are running a firmware 1.x version on your device, you must first upgrade to the 1.16.04 release before installing version 2.0 and beyond.

For more information, refer to the Middle Atlantic Power Downloads page at: https://www.legrandav.com/resources/power-downloads.

1. Use the RackLink Discovery Tool and connect to a RackLink device.

   For more information, see Using the RackLink Discovery Tool on a PC, on page 1.

2. Log in using the Admin account to access the Administrator Settings menu.

   For more information, see Accessing the Web Interface, on page 54.

3. Click **Firmware** on the Administrator Settings menu.

   The Firmware screen appears.

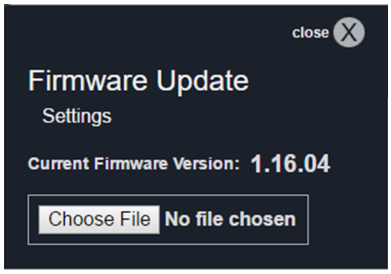

4. View the Current Firmware Version for the number of the latest firmware installation.
5. Click **Choose File** to locate a newer firmware version file you wish to upload to your RackLink device.

©2026 | Legrand AV Inc, Inc. All rights reserved.

6. After choosing a file, the file Name, Size, and a Transfer Status bar appear, and the Upload button is enabled.

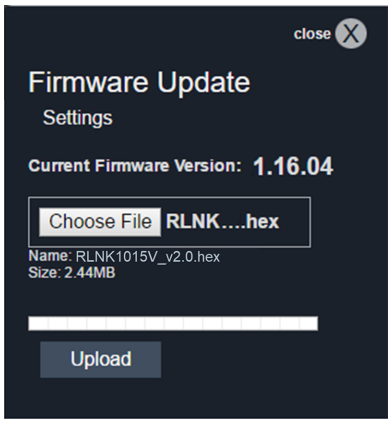

7. Click **Upload**.
8. The Transfer Status bar progresses and indicates a percentage. The status then changes to **`Finalizing`** until indicating **`Transfer Successful`**.
9. After the transfer completes, the Restart button appears and the system indicates an upload reminder that the "Unit will sequence down, install the new firmware, and return to the main page."

10. Click **Restart**.

©2026 | Legrand AV Inc, Inc. All rights reserved.

A message then appears indicating "Sequencing down the device and updating its firmware. This page will reload in: XX seconds."

NOTE

- The unit will sequence down, install the new firmware version, and then power back up.
- The Alert LED blinks green while the system restarts. Do not power down your unit during the system restart.

11. When the dashboard appears, confirm that the firmware version is correct.

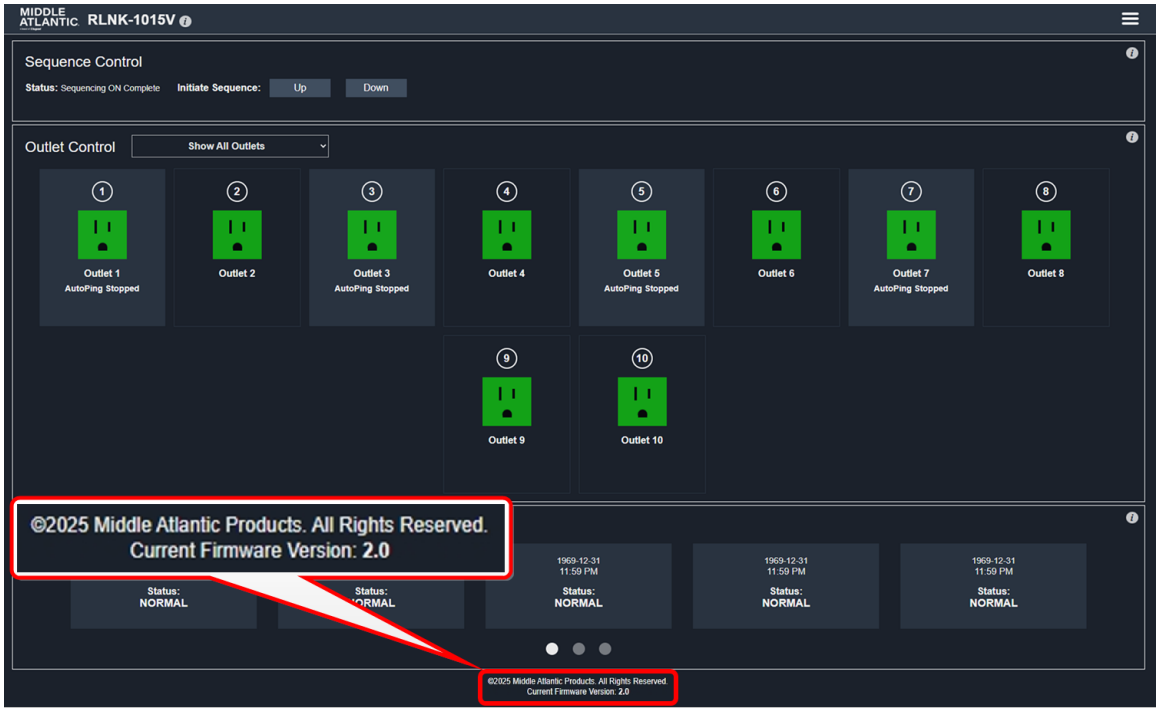

©2026 | Legrand AV Inc, Inc. All rights reserved.

Configuring Network Settings

1. Use the RackLink Discovery Tool and connect to a RackLink device.

   For more information, see Using the RackLink Discovery Tool on a PC, on page 1.

2. Log in using the Admin account to access the Administrator Settings menu.

   For more information, see Accessing the Web Interface, on page 54.

3. Click **Network** on the Administrator Settings menu.

   The Network screen appears.

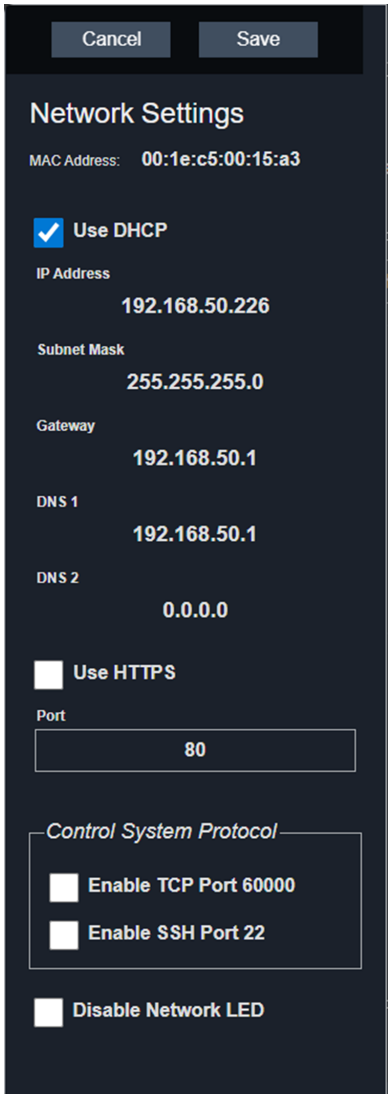

4. The MAC Address displays the unique MAC Address of your specific RackLink device.
5. Use DHCP or configure your IP settings manually as follows:

©2026 | Legrand AV Inc, Inc. All rights reserved.

- Select the DHCP check box to use a DHCP server for configuring all IP address settings.
- Clear the DHCP check box to configure the following IP settings manually:
  - Device IP Address
  - Subnet Mask
  - Gateway
  - DNS1 (Primary DNS)
  - DNS2 (Secondary DNS, Optional)

6. Configure HTTP or HTTPS settings as follows:

   Dual Warning

WARNING

Consider the actively running equipment connected to your PDU when saving your HTTPS or HTTP settings. When changing the HTTP/HTTPS setting and saving this screen, the system prompts you with a notification that, after clicking OK, your device will power cycle down and then sequence up for the change to take effect.

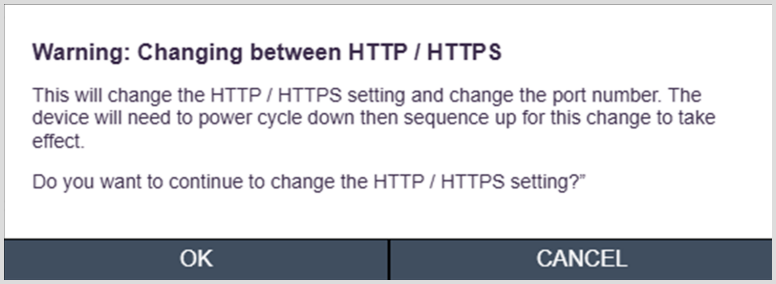

AVERTISSEMENT

Tenez compte de l'équipement en fonctionnement connecté à votre PDU lorsque vous enregistrez vos paramètres HTTPS ou HTTP. Lorsque vous modifiez le paramètre HTTP/HTTPS et que vous enregistrez cet écran, le système vous avertit qu'après avoir cliqué sur OK, votre appareil doit s'éteindre puis se rallumer pour que la modification prenne effet.

©2026 | Legrand AV Inc, Inc. All rights reserved.

- Clear the **Use HTTPS** checkbox to use HTTP.

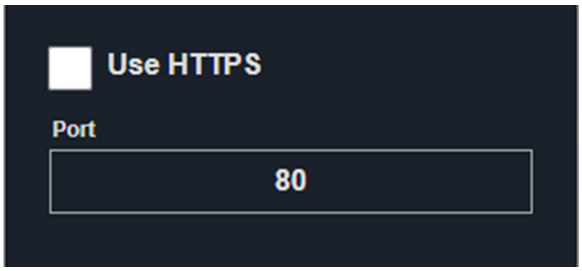

  - The default Port is automatically set to 80 and may be changed to a specific number, if desired.

> **NOTE** When using HTTP, you may specify your selected port as part of the URL when accessing the page, if desired.

  - Port 443 is specifically reserved for HTTPS and may not be used for HTTP.

> **NOTE** The following port numbers are already used by the system and may not be specified as the port for HTTP:
>
> - 7 (ICMP/Ping)
> - 54632 (Discovery)
> - 60000 (Control Protocol)

- Select the **Use HTTPS** check box to enable secure HTTP.

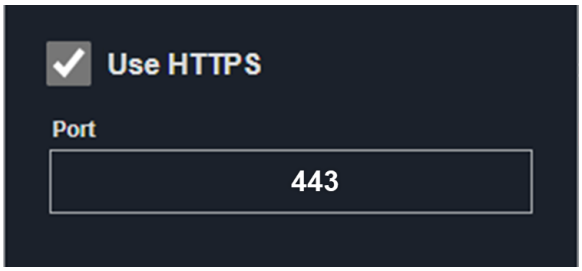

  - Enabling HTTPS disables HTTP. Only one method may be enabled at a time.
  - The default Port is automatically set and locked to 443.
  - If you enter 443 in the Port field and move to a different field before selecting the Use HTTPS check box, the system automatically enables HTTPS.

©2026 | Legrand AV Inc, Inc. All rights reserved.

NOTE With HTTPS enabled, do not specify port 443 as part of the URL when accessing the page.

7. Configure Control System Protocol settings as follows:
   - Select the **Enable TCP Port 60000** check box to enable the TCP port.

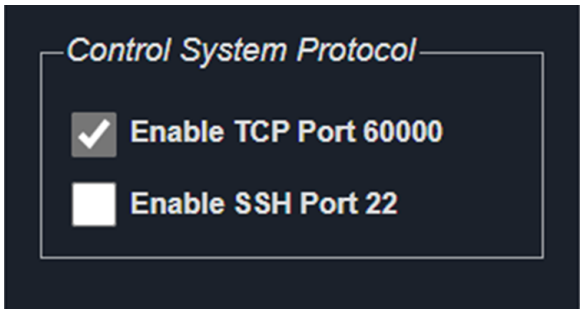

   - Select the **Enable SSH Port 22** check box to enable the SSH port.

NOTE
- SSH is typically enabled by default.
- Your administrative username and password from the RackLink system is used when establishing the SSH connection. While hex-based login commands are used for the port 60000, they are not used for this port 22.

8. Select the **Disable Network LED** check box to keep the Alert LED from signaling the network alerts. Keep in mind, the Alert LED blinks green during system restarts, when acquiring an IP address, and applying settings. Users running non-networked installations may prefer this option.

TIP If you are running a non-networked installation, you may prefer disabling the network LED with this setting.

©2026 | Legrand AV Inc, Inc. All rights reserved.

Locate the Alert LED on your unit to determine if you would prefer it disabled. For more information, see Understanding RackLink Model Feature Sets, on page 44.

9. Click **Save**.

WARNING

Consider the actively running equipment connected to your PDU when saving your HTTPS or HTTP settings. When you click save after changing any of these specific fields, the system warns you that all outlets are power cycled while applying the settings.

AVERTISSEMENT

Tenez compte de l'équipement en fonctionnement connecté à votre PDU lorsque vous enregistrez vos paramètres HTTPS ou HTTP. Lorsque vous cliquez sur save après avoir modifié l'un de ces champs spécifiques, le système vous avertit que toutes les prises sont mises hors tension pendant l'application des paramètres.

NOTE

- The Alert LED blinks green while the system restarts, acquires an IP address, and applies your settings. Do not power down your unit during the system restart.
- If using DHCP and the device does not receive a request after 30 seconds, it will default to 192.168.1.200 and the Alert LED alternates between red and green.

TIP

To restore the default settings, see Restoring Factory Defaults, on page 90

Configuring Passwords

When logged in to the web interface using the Admin account, you can change the passwords for the User, Admin, and Control Systems accounts.

NOTE

- For default account names, passwords, and logging in for the first time, see Accessing the Web Interface, on page 54.
- While passwords may be changed by the administrator, account names are fixed and cannot be changed.

1. Use the RackLink Discovery Tool and connect to a RackLink device.

   For more information, see Using the RackLink Discovery Tool on a PC, on page 1.

©2026 | Legrand AV Inc, Inc. All rights reserved.

2. Log in using the Admin account to access the Administrator Settings menu.

   For more information, see Accessing the Web Interface, on page 54.

3. Click **Passwords** on the Administrator Settings menu.

©2026 | Legrand AV Inc, Inc. All rights reserved.

The Passwords screen appears.

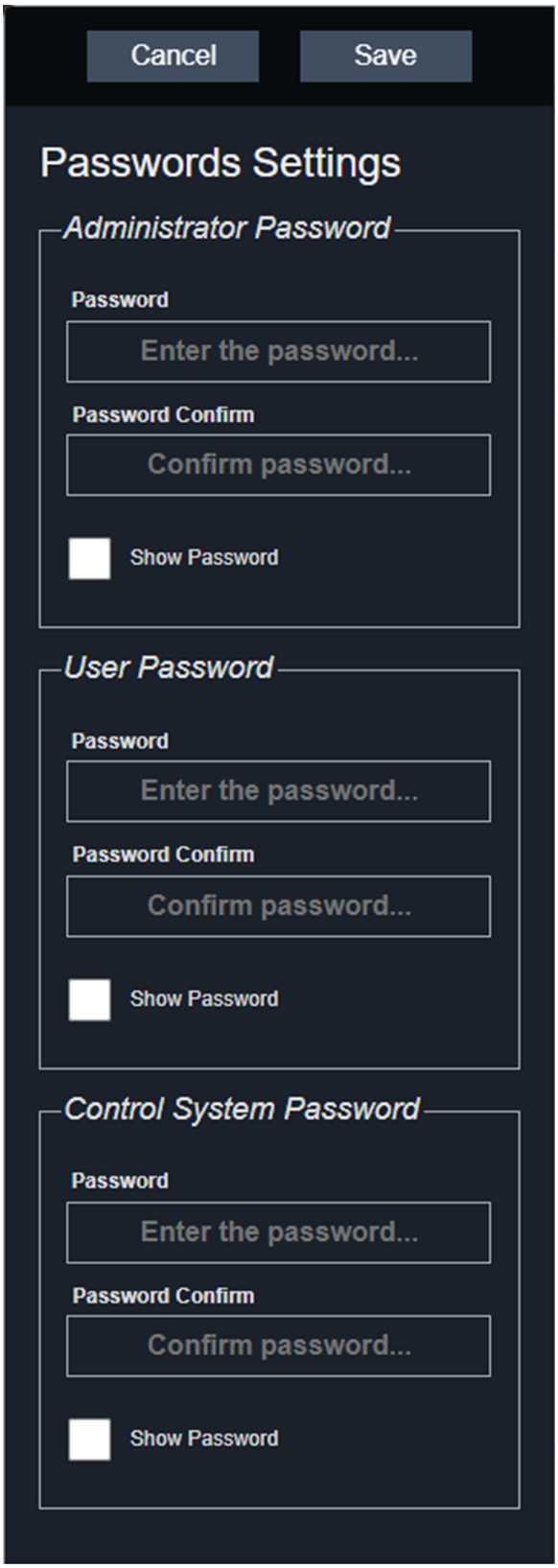

©2026 | Legrand AV Inc, Inc. All rights reserved.

4. Enter and confirm the passwords to change the Administrator, User, and Control System accounts, as desired.
5. Select the **Show Password** check box to display the actual characters in corresponding text boxes.
6. Click **Save**.

TIP To restore the default settings, see Restoring Factory Defaults, on page 90

Downloading and Using the RackLink Device Discovery Tool

The following steps and topics show you how to download and use the RackLink Device Discovery Tool on your Windows®, Mac®, or Linux® computer.

1. If you haven't done so already, download the Device Discovery Tool software installer onto your computer from the Power Downloads page at: https://www.legrandav.com/resources/power-downloads.
2. Use the following topics to install the software based on your specific operating system.
   - For Windows, see Installing the RackLink Device Discovery Tool Software on a Windows PC, on page 104.
   - For Mac, see Installing the RackLink Device Discovery Tool Software on a Mac, on page 106.
   - For Linux, see Installing the RackLink Device Discovery Tool Software on Linux, on page 108.

   NOTE You may need to contact your administrator to install software on your computer.
3. Whenever you launch the RackLink Device Discovery Tool, the program automatically discovers all RackLink devices on the subnet to which you are connected.

©2026 | Legrand AV Inc, Inc. All rights reserved.

NOTE

- The examples shown in this topic are from a Windows PC. The procedures and images are similar on Mac or Linux as well.
- You may need to configure your firewall to discover your device. If you are on a managed corporate network, please ask your network administrator for guidance. For personal devices, refer to your operating system's security documentation to verify any necessary ports are open.
- By default, RackLink devices are set for DHCP. You can identify each device by the MAC address or IP address.

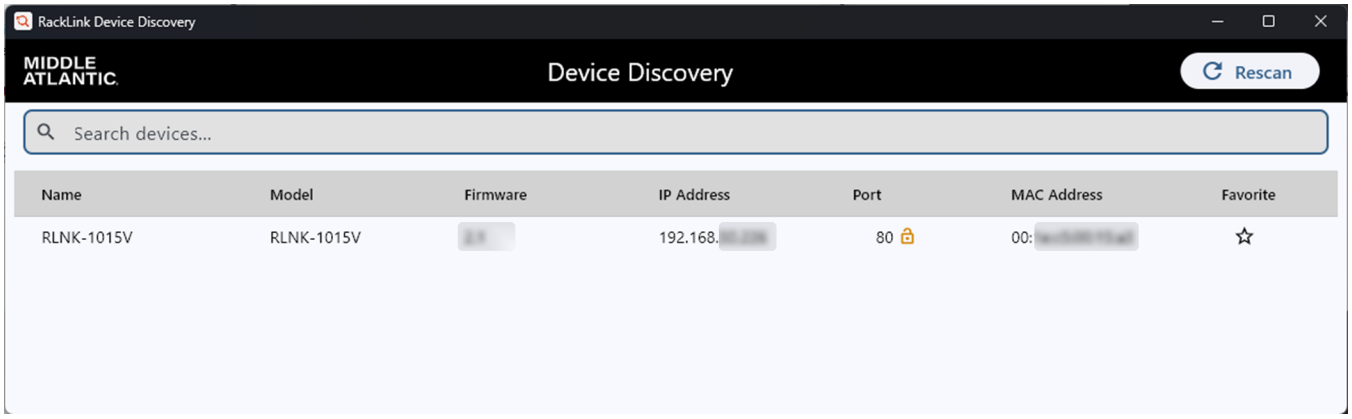

4. Click **Rescan** to refresh any new or changed RackLink devices on your subnet.
5. Right click on a listed device's row and choose from the following options:

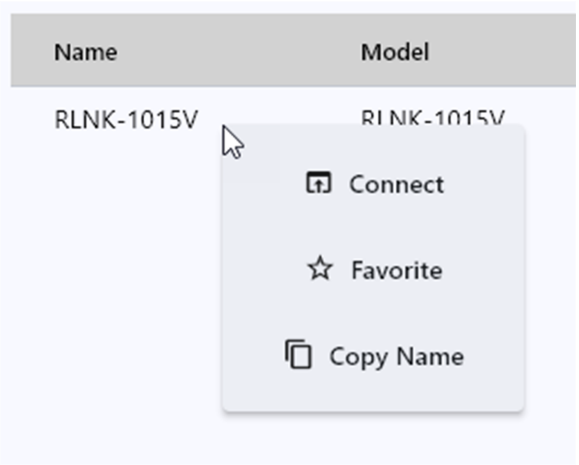

©2026 | Legrand AV Inc, Inc. All rights reserved.

- Select **Connect** to access the corresponding web interface.

> **TIP** Double-click the row (except in the Favorites column) to quickly access the corresponding web interface.

- Select **Favorite** to "pin" the device row to the top when multiple products are listed.

> **TIP** Click the **Favorite** star (without right-clicking) to add the device to your favorites.

- Select **Copy X** (where "X" represents the Name, Model, Firmware, IP Address, Port, and MAC Address) to put the value for the given column on your clipboard.

6. When accessing the web interface, the system prompts you for a username and password.

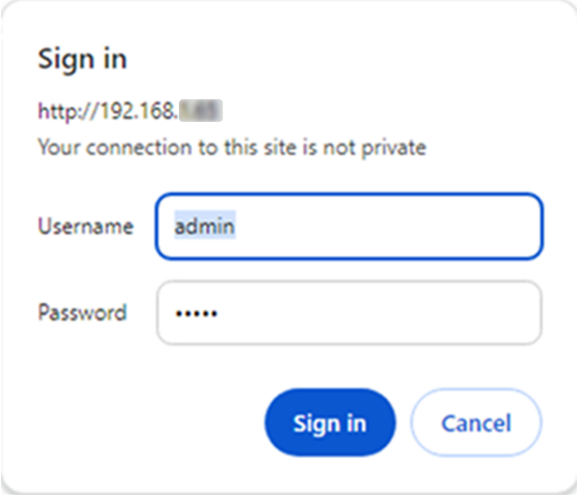

Installing the RackLink Device Discovery Tool Software on a Windows PC

Use the following steps to download and install the Device Discovery Tool software on a PC.

1. If you haven't done so already, download the Device Discovery Tool software installer onto your computer from the Power Downloads page at: https://www.legrandav.com/resources/power-downloads.
2. Run the Windows MSIX file.

©2026 | Legrand AV Inc, Inc. All rights reserved.

The Device Discovery installer appears.

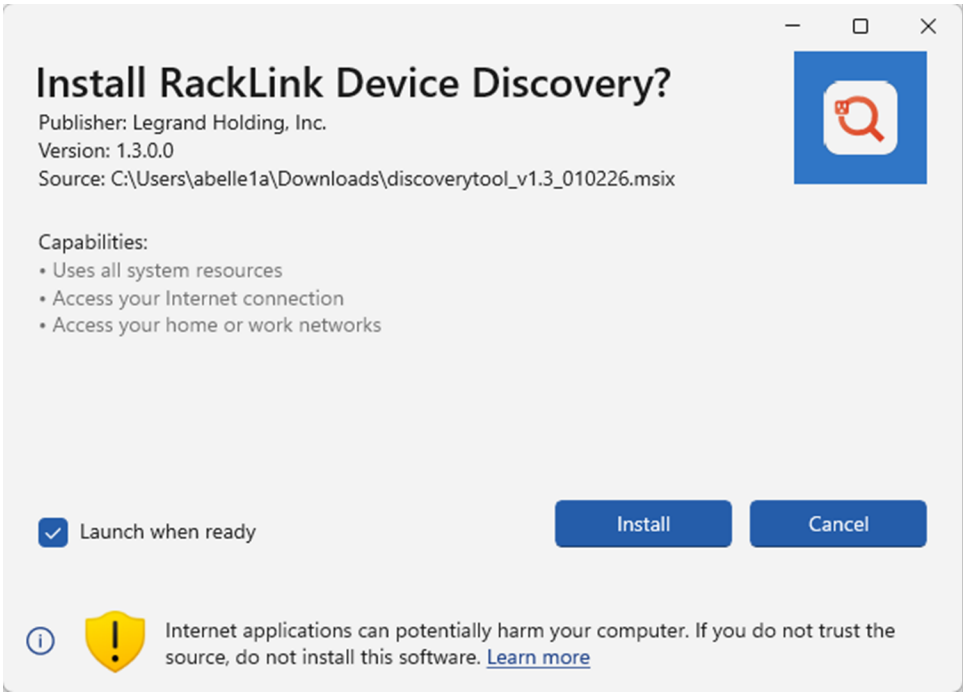

3. Select the Launch when ready check box.
4. Click **Install**.

   After the application is installed on your system, the Device Discovery Tool launches and automatically discovers all RackLink devices on the subnet to which you are connected.

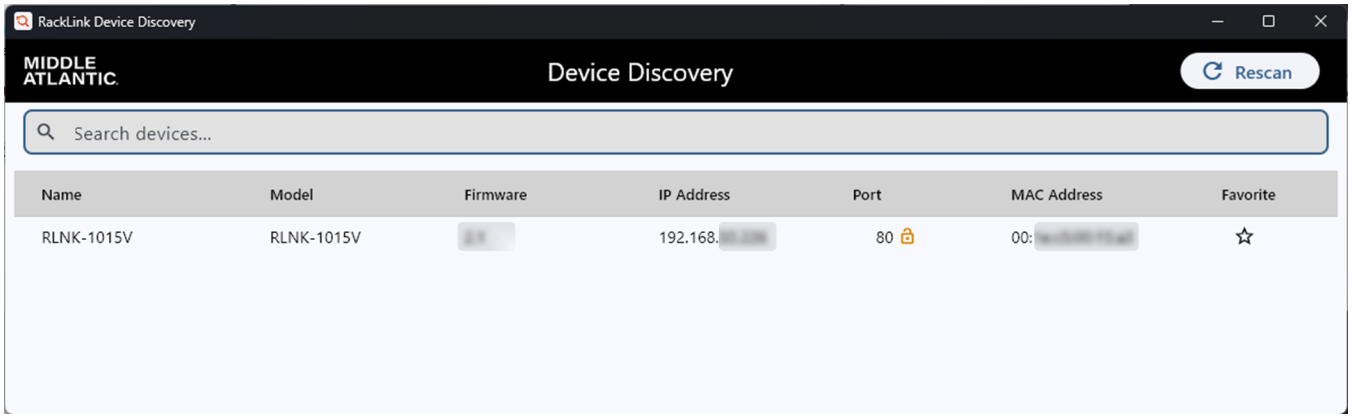

For more information, see Downloading and Using the RackLink Device Discovery Tool, on page 102.

©2026 | Legrand AV Inc, Inc. All rights reserved.

Installing the RackLink Device Discovery Tool Software on a Mac

Use the following steps to download and install the Device Discovery Tool software on a Mac.

1. If you haven't done so already, download the Device Discovery Tool software installer onto your computer from the Power Downloads page at: https://www.legrandav.com/resources/power-downloads.
2. Run the Mac setup (.dmg) file.

   TIP You may have to use Finder to locate the file on your system.

   The Discovery Tool Installer appears.

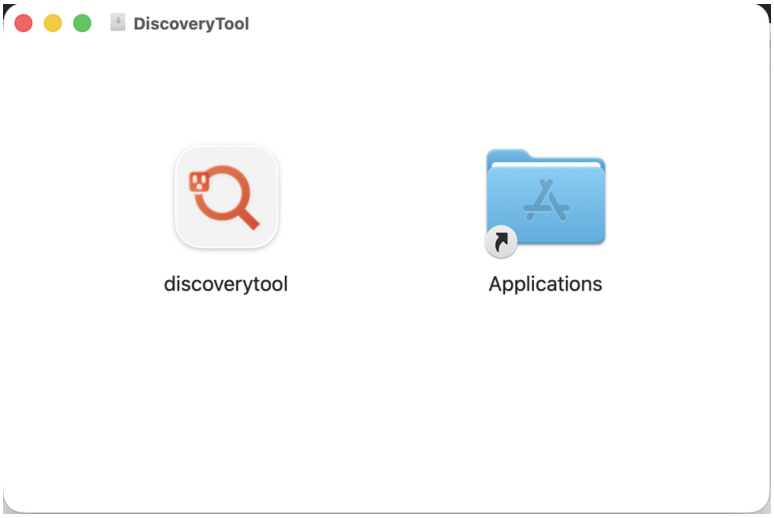

3. Drag and drop the Discovery Tool icon onto the **Applications** folder.
4. Double-click the **Applications** folder to open it.

©2026 | Legrand AV Inc, Inc. All rights reserved.

The Applications folder content appears.

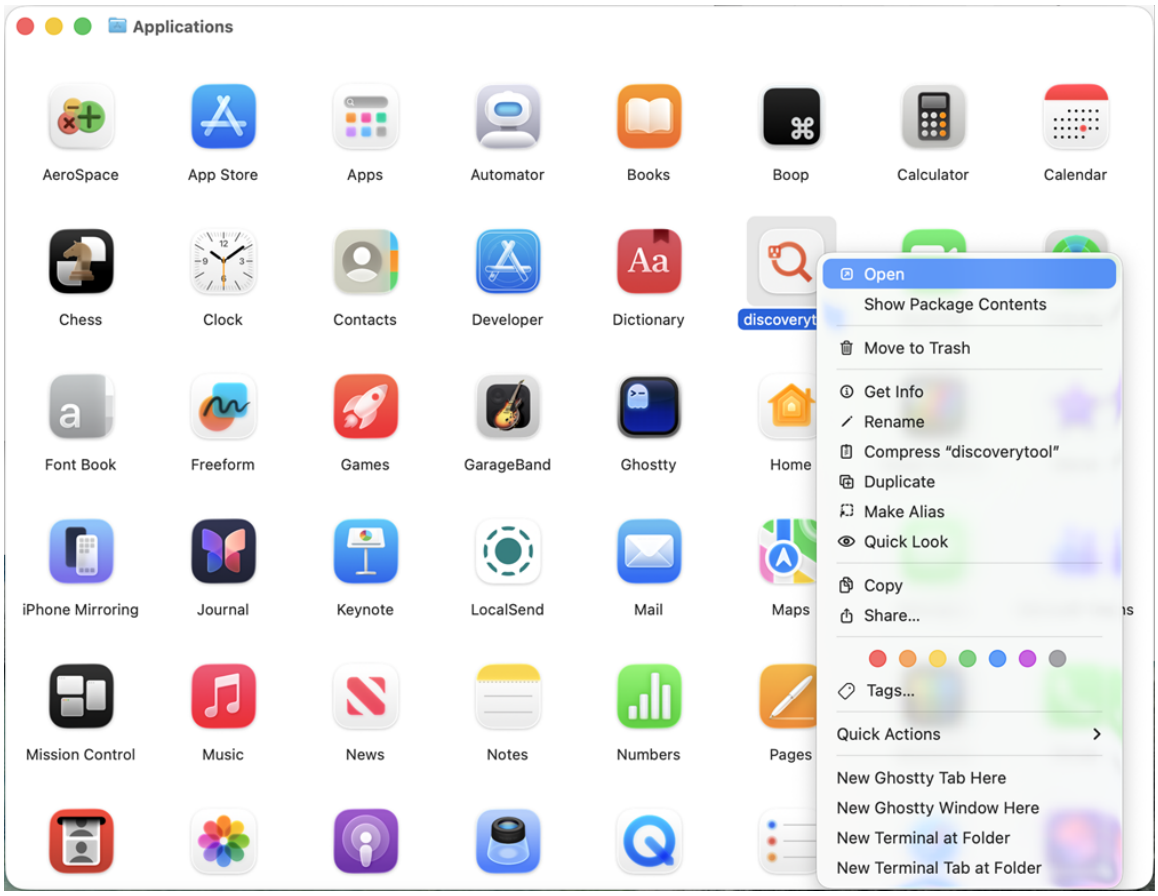

5. Right-click the Discovery Tool icon and select **Open**.

   The main screen of the Device Discovery Tool appears.

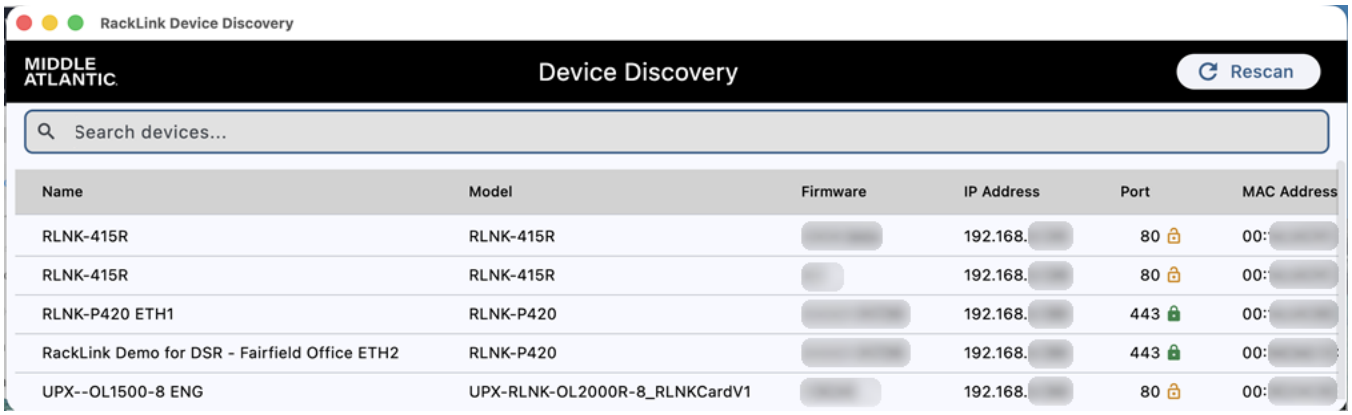

For more information, see Downloading and Using the RackLink Device Discovery Tool, on page 102.

©2026 | Legrand AV Inc, Inc. All rights reserved.

Installing the RackLink Device Discovery Tool Software on Linux

Use the following steps to download and install the Device Discovery Tool software on Linux®.

1. If you haven't done so already, download the Device Discovery Tool software installer onto your computer from the Power Downloads page at: https://www.legrandav.com/resources/power-downloads.
2. Open a command prompt and type **`cd Downloads/`** (or wherever you downloaded the installer on your system) and press **enter**.

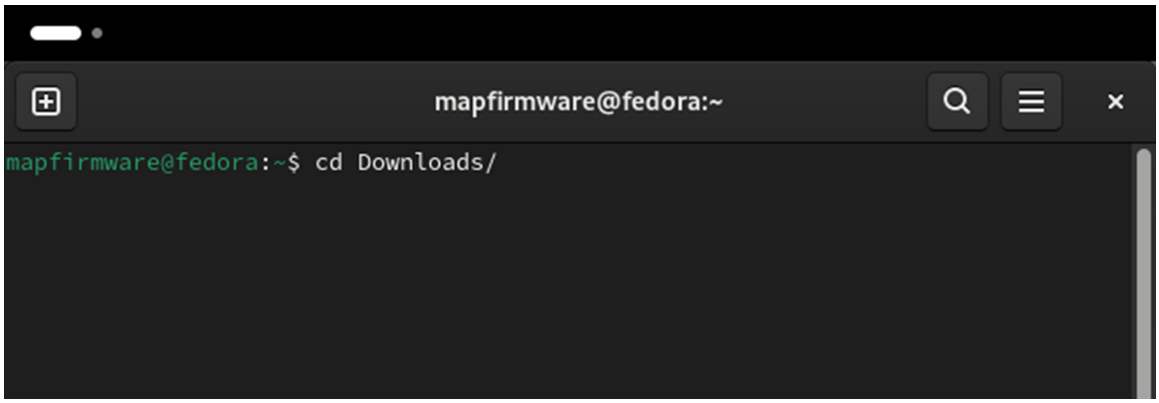

3. Type **`./discoverytool.AppImage`** and press **enter** to launch the installer.

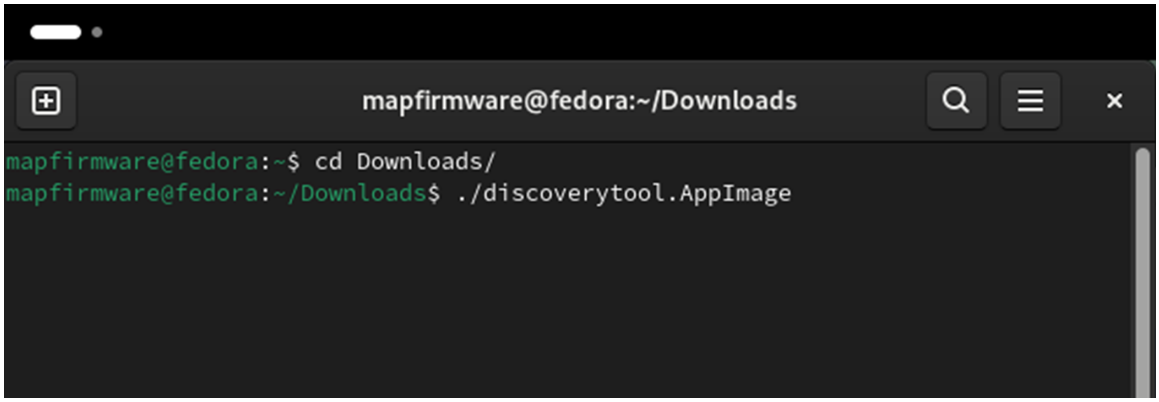

©2026 | Legrand AV Inc, Inc. All rights reserved.

4. The main screen of the Discovery Tool appears.

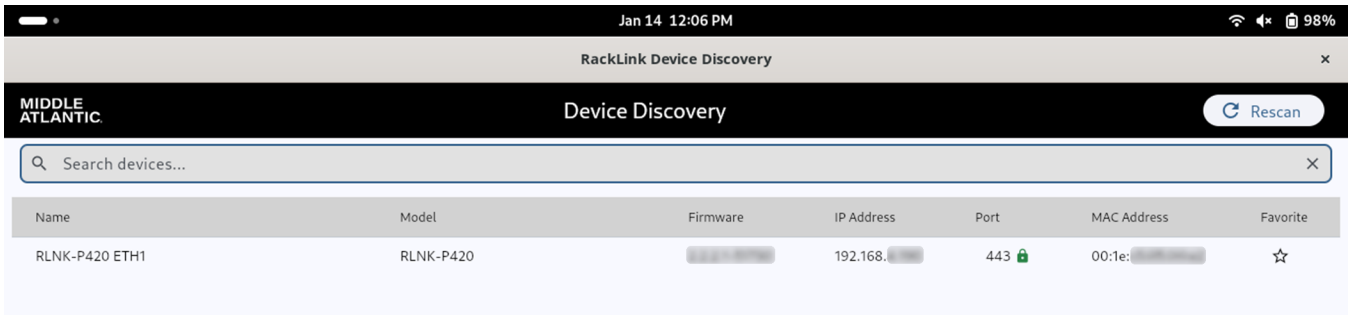

For more information, see Downloading and Using the RackLink Device Discovery Tool, on page 102.

Downloading and Using the Mobile App

The mobile application allows real-time control of any controllable outlet from your mobile phone.

1. Download the RackLink app from the Google Play™ store or the App Store® and install it on your smartphone.

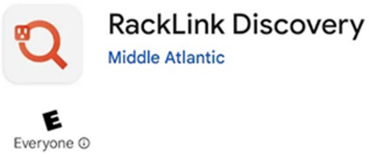

2. Make sure your smartphone is on the same network as your RackLink device, and then open the application.
3. After opening the application, it automatically searches for any available RackLink devices on your network and then lists them on the screen.

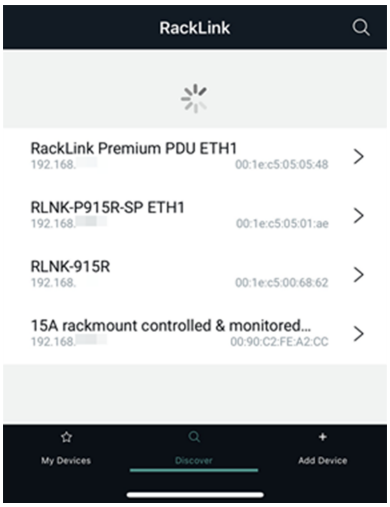

©2026 | Legrand AV Inc, Inc. All rights reserved.

4. Touch the RackLink device you wish to access. The selected device then prompts you for your username and password.

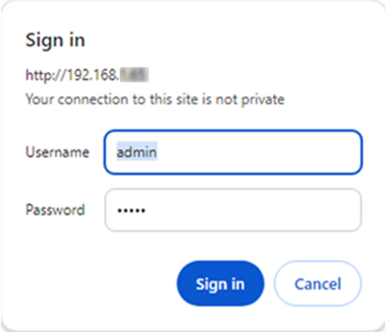

5. Log into the Administrator, User, or Control Systems account on your RackLink device.

   For more information, see Accessing the Web Interface, on page 54.

6. The application then shows the dashboard for the corresponding RackLink device.

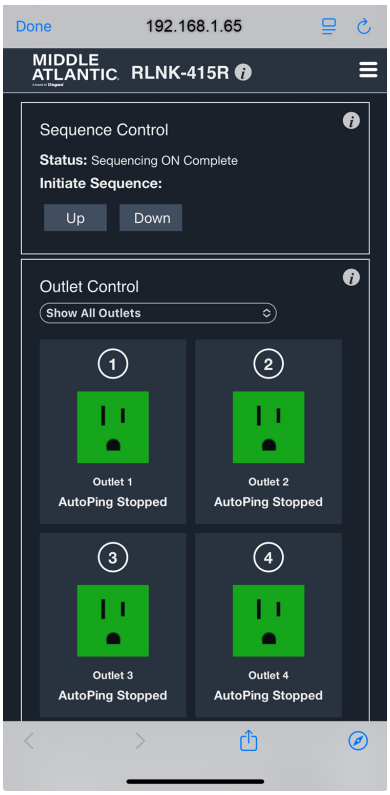

NOTE On-screen user interface elements in the application are similar to the ones found in the web interface. For more information, see Accessing the Web Interface, on page 54.

©2026 | Legrand AV Inc, Inc. All rights reserved.

Troubleshooting

This topic includes groups of common questions along with corresponding solutions when using your PDU.

General Troubleshooting Items

What if I forget my password?

Press the Factory Reset button on the device. This defaults the permissions to username: admin and password: admin. For more information, see Understanding RackLink Model Feature Sets, on page 44.

> **NOTE** If you have configured your RackLink to use TCP/IP, resetting the system restores it to using DHCP. For more information, see Setting Up Your RackLink Device for the First Time, on page 37.

What if my browser warns me when accessing the web interface?

> **NOTE** Chrome is used as the web browser for the example shown. The procedures and images are similar if you use a different browser.

Your browser is likely to display a security certificate warning when you first access the web interface.

©2026 | Legrand AV Inc, Inc. All rights reserved.

Click **Advanced** and then **Proceed** to bypass the security certificate warning (since locally issued certificates are used at this point, unless you changed them).

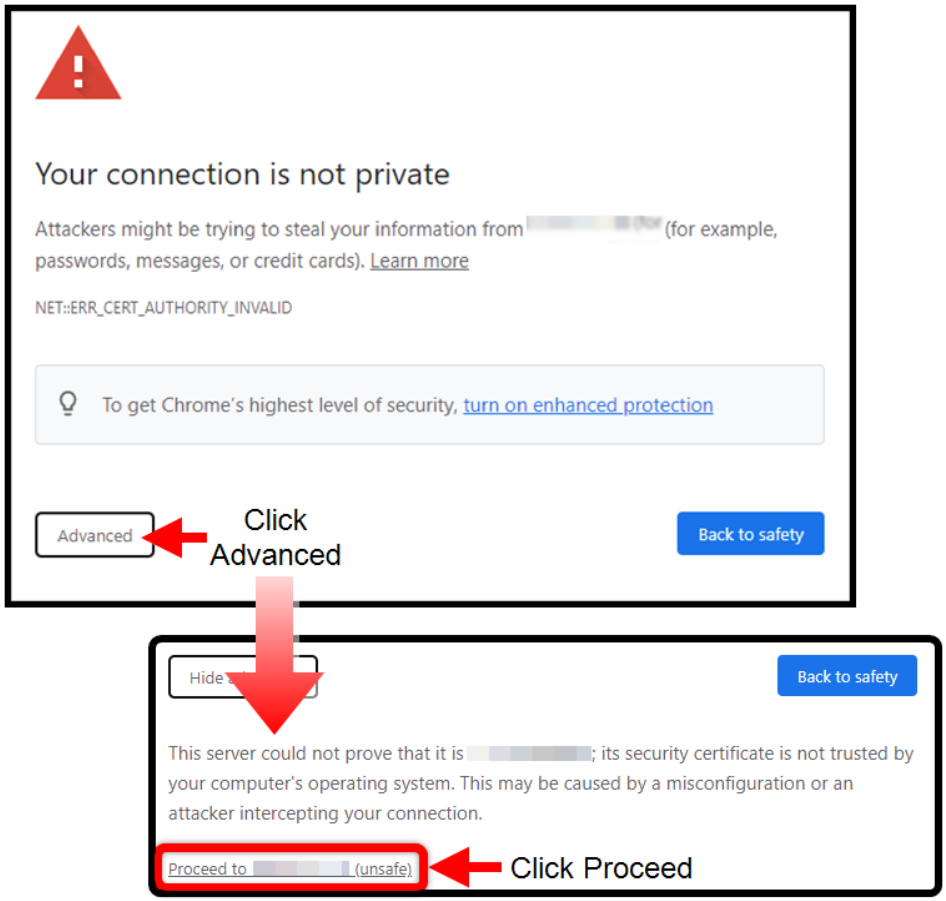

For more information, see Using the Web Interface, on page 54.

What if my RackLink device is inoperable after I perform a firmware upgrade?

Contact Middle Atlantic Products Technical Support at av.middleatlantic.techsupport@legrand.com or (866) 977-3901.

What if my RackLink device is not receiving power?

Ensure that the line cord connector is fully inserted into the back outlet and the line cord retainer clip is securely fastened. Confirm that the circuit breaker is in the ON position. Plug another device into the exact same outlet your RackLink device was using and see if the other device functions.

©2026 | Legrand AV Inc, Inc. All rights reserved.

Troubleshooting Connectivity Issues

I connected RackLink to my network, but I can't find it in the Discovery Tool. What's wrong?

The RackLink Discovery Tool can only find RackLink devices that are on the same subnet as the computers accessing them.

- If you are using a DHCP connection, and your RackLink device is unable to obtain an IP address from the DHCP server, set your computer's IP address to 192.168.1.xxx. Where xxx is any number between 1 and 199 or 201 to 254. Your RackLink will default its IP address to 192.168.1.200 and connect with your computer.
- If you are using a TCP/IP connection, consider the following scenario:

  If your computer has an IP address of 192.168.1.50 and a subnet mask of 255.255.255.0, and your RackLink has an IP address of 192.168.2.50 and a subnet mask of 255.255.255.0, the RackLink will not be listed in the Discovery Tool. This is because the third octets of the IP addresses (1 and 2, respectively) differ. With a subnet mask of 255.255.255.0, the first three octets of the IP addresses on the computer and RackLink would have to match.

  For more information regarding IP addresses, refer to Microsoft's TechNet articles at http://technet.microsoft.com/en-us/library/cc958829.aspx.

What could be wrong if I can't access the web interface?

Check to see if you can access a standard web page, such as www.google.com. Verify that the Ethernet port's LEDs on the back of your RackLink device are solid yellow and blinking green. Review the procedures in Setting Up Your RackLink Device for the First Time, on page 37.

Troubleshooting Control System Issues

I press the Factory Reset button and reset my RackLink to factory defaults, but I'm getting a login denied response from RackLink when I sign in using the default Control Systems account and password. Why is this happening?

Earlier versions of RackLink firmware did not reset the Control Systems account password after pressing the Reset button. In such cases, perform a manual reset by accessing the Passwords screen in the web interface and setting the Control Systems account password to match your Control System.

©2026 | Legrand AV Inc, Inc. All rights reserved.

You should also update your firmware. For more information, see Updating Device Firmware, on page 92

Every time I send a command from my control system to my RackLink it responds with a “Bad Length” error. Why is this happening?

The length byte is in hexadecimal format. When you add up the total command length, make sure you convert the length from decimal format to hexadecimal format.

Every time I send a command from my control system to my RackLink it responds with a “Bad Checksum” error. Why is this happening?

Review the Checksum section of the Select Series PDU With RackLink Control System Communication Protocol Manual (I-00472) at www.legrandav.com. Make sure to AND the sum with 127 (0x7F) or modulus the sum with 128 (0x80).

Troubleshooting Alert LED States

What are the different statuses for the Alert LEDs?

Alert LED State	What it Means
Blinking Green	Acquiring IP address (during startup).
Green	Normal operation, IP acquired, and no alarms.
Blinking Green/Red	No alarms, running on default IP (DHCP not acquired).
Blinking Red	Lost IP connection.
Red	Network is active, alarms present.

©2026 | Legrand AV Inc, Inc. All rights reserved.

Warranty

For warranty information, refer to www.legrandav.com/policies/warranty_information.

Contacting Corporate Headquarters

P: (866) 977-3901 | F: (877) 894-6918 | www.legrandav.com | av.middleatlantic.techsupport@legrand.com

Contacting Middle Atlantic Canada

P: (888) 766-9770 | F: (888) 599-5009 | www.legrandav.com | av.canada.customerservice@legrand.com

Contacting Middle Atlantic EMEA Technical Support

P: +31 495-726-003 | av.emea.middleatlantic.support@legrand.com

United States (US)
Legrand | AV Headquarters
10900 Red Circle Drive
Minnetonka, MN, 55343, USA

European Union (EU)
Legrand AV Netherlands
B.V. Franklinstraat 14 6003
DK, Weert, Netherlands

United Kingdom (UK)
Starline Holding Technology Ltd.
(Authorized Representative)
Unit C, Island Rd.
Reading RG2, 0RP- UK

At Legrand AV Inc Inc. we are always listening. Your comments are welcome.
Legrand AV Inc is an ISO 9001 and ISO 14001 Registered Company.

©2026 | Legrand AV Inc, Inc. All rights reserved.