Alarm.com Universal Communicator (AUC) LX30B - Installation Guide - Model: LX30B-QxxT

The Alarm.com Universal Communicator (AUC) is a takeover device for upgrading compatible older POTS security systems. The LX30B-AUC provides the best of Alarm.com security, including arming and disarming remote control through the Alarm.com Customer app and notifications like Unexpected Activity Alerts and location-based arming reminders.

The LX30B-AUC can retrofit various compatible older POTS-type security systems, such as DSC, Honeywell, PIMA, GE, Paradox, Intelbras, Visonic, and Texacom. Legacy panels can communicate with the LX30B-AUC using the POTS line and can be remotely armed/disarmed through the use of a keyswitch zone. Keyswitch zone refers to the type of definition of a zone, which would allow a security system to be armed/disarmed, through momentary contact. This is generally supported by most traditional security systems.

For more information about specifications, see LX30B Alarm.com Universal Communicator (AUC) - Data Sheet.

For more information about features supported, see What features are available when using an Alarm.com Universal Communicator (AUC)?.

Compatibility requirements

- LX30B-AUC firmware version must be 2.19.4+.
- Verify compatibility of the panel and desired protocol (CID or SIA). For more information about the panels that have been certified, see Which control panels are compatible with Alarm.com Universal Communicators?.
- Verify that the panel is not using zone numbers greater than 126 and is capable of sending signals using a POTS phone line (PSTN).
- For keyswitch integration to remotely view or change panel arming status, verify each of the following:
  - For remotely viewing panel arming status, verify a PGM slot is available.
  - For remotely changing panel arming status, verify a hardwired zone is available.
  - A *Universal Communicator* service package is required.
  - The Customer app version must be 5.6+ on iOS and Android.

Before you start - Important safety instructions

This document provides information about mounting, wiring, and troubleshooting of the Alarm.com Universal Communicator (AUC). It is written under the assumption that the installer is qualified and possesses the necessary skills to install this device.

Read all the safety and operating instructions listed below before installation and use.

- The device should be assembled, installed, and serviced by qualified personnel in accordance with the instructions.
- The device should be checked by qualified personnel once a year (on average).
- The device should work in a safe environment with parameters in accordance with the device's specifications.
- Operating temperature: nominal: +68ºF (+20ºC), acceptable: +14ºF… +131ºF (-10ºC… +55ºC). Humidity 0% ... 93% (without condensation).
- Do not install the device near any heat sources; such as radiators, heat registers, stoves, or other appliances that produce heat.
- The device is intended only for indoor and dry installation. __
- Do not install in dirty, dusty places, places with high humidity (with condensation), or near water, chemical vapors or in the same room with medical equipment, the function of which may be disrupted.
- If damaged, the device should be disconnected then replaced only by trained, qualified personnel. Before disconnecting the device, it is necessary to disconnect the power supply.
- Do not repair the device yourself, repairs are made only by the manufacturer's service.
- The device should always be cleaned with a dry cloth. Do not use water, detergents or chemicals — they may damage the device.
- Avoid mounting the Universal Communicator near sources of significant electromagnetic interference, or in rooms where metal is the predominant structural material due to the potential for cellular signal attenuation.

Caution: To reduce the risk of fire or electric shock, do not expose the device to rain or moisture.

Prepare the system

Verify installer code and panel programming

Important: The panel installer code and access to local panel programming are required to perform a Universal Communicator install. Consult security panel manufacturer documentation and support for assistance with local use, navigation, and programming of the panel.

The following settings must be configured in local panel programming to enable communication between the Alarm.com Universal Communicator (AUC) and control panel:

Expand all

Set monitoring station account number

Program the account number on the panel per manufacturer instructions and use it when creating the customer account on Alarm.com.

The monitoring station account number allows the panel to tell the central monitoring station which account a signal is meant for.

Set monitoring station phone number

Program the phone number on the panel per manufacturer instructions to value *555555*, which is what the Alarm.com Universal Communicator expects the panel to use by default during account creation.

Important: It is possible to change the phone number the Alarm.com Universal Communicator (AUC) expects the panel to use by updating the *Communicator Phone Number* using the *Command Catalog* on the Partner Portal or MobileTech app.

The monitoring station phone number is the phone number the panel dials when transmitting signals over a phone line. The phone number the panel dials must match the phone number the Alarm.com Universal Communicator (AUC) expects the panel to use.

Set monitoring station signaling protocol

Verify which protocols the panel can use with the Alarm.com Universal Communicator. For more information about supported protocols for each panel, see Which control panels are certified for integration with Alarm.com Universal Communicators?. If the panel can use both CID and SIA, CID is recommended because that is what the Alarm.com Universal Communicator expects by default.

Important: If SIA must be used, it is possible to change the signaling protocol the Universal Communicator expects the panel to use by updating the *Reporting Protocol* using the *Command Catalog* on the Partner Portal or MobileTech app.

The signaling protocol dictates the format of signals sent to the central monitoring station (i.e. CID or SIA).

Set PGM programming (if using)

Program an output (PGM) on the panel per manufacturer instructions with the following settings:

- Definition: System arming status
- Activation Type: Latched mode

A PGM can be programmed to report the panel arming status to Alarm.com, allowing customers to view it remotely using the Customer app and Customer website.

Set keyswitch zone programming (if using)

Alarm.com recommends that if remote arming is required and momentary keyswitch arming is available, the customer account should be configured to use momentary keyswitch arming.

If a control panel does not support momentary keyswitch arming, the panel may support state (latched) keyswitch arming. To verify compatibility, see Which control panels are certified for integration with Alarm.com Universal Communicators?.

Important: When remotely arming the panel, our configuration is meant to arm the panel away.

To set up momentary keyswitch arming (recommended):

Program a keyswitch zone on the panel per manufacturer instructions with the following settings:

- Definition: Keyswitch
- Activation Type: Timed mode (also called instant, impulse, or momentary mode)
- Activation Length: 3 seconds

1. Log in to the Partner Portal.
2. Find the customer account.
3. Click **Command Catalog**.
4. In *Arming Settings*, click **Configure Keyswitch Arming**.
5. Using the *Output mode* dropdown, select **Impulse (Momentary)**.
6. Using the *Output reaction time* dropdown, select **3 seconds**.
7. Click **Apply Settings**. Allow a few minutes for the settings to save on the panel.

To set up state (latched) keyswitch arming:

Program a keyswitch zone on the panel per manufacturer instructions with the following settings:

- Definition: Keyswitch
- Activation Type: Latched mode (also called state mode)

1. Log in to the Partner Portal.
2. Find the customer account.
3. Click **Command Catalog**.
4. In *Arming Settings*, click **Configure Keyswitch Arming**.
5. Using the *Output mode* dropdown, select **State (Latched)**.
6. Click **Apply Settings**. Allow a few minutes for the settings to save on the panel.

A keyswitch zone can be used to change the panel arming status remotely using Alarm.com.

Set additional programming options

Depending on the brand of the control panel, there may be additional settings to configure to ensure the panel send signals to the Universal Communicator. Some examples include the following:

- Enable telephone line
- Enable DTMF communication
- Enable alarm reporting
- Enable panic reporting
- Enable arming/disarming reporting

Some panels have panel-specific setup guides available. For panel-specific setup guides, see Alarm.com Universal Communicator (AUC) - Panel Setup Guides.

Disarm and power down the panel

Prior to disconnecting power from the panel, verify the following:

- The control panel is disarmed and does not have any alarms in memory.
- There are no local trouble conditions at the panel.

Next, remove panel AC power and disconnect the backup battery.

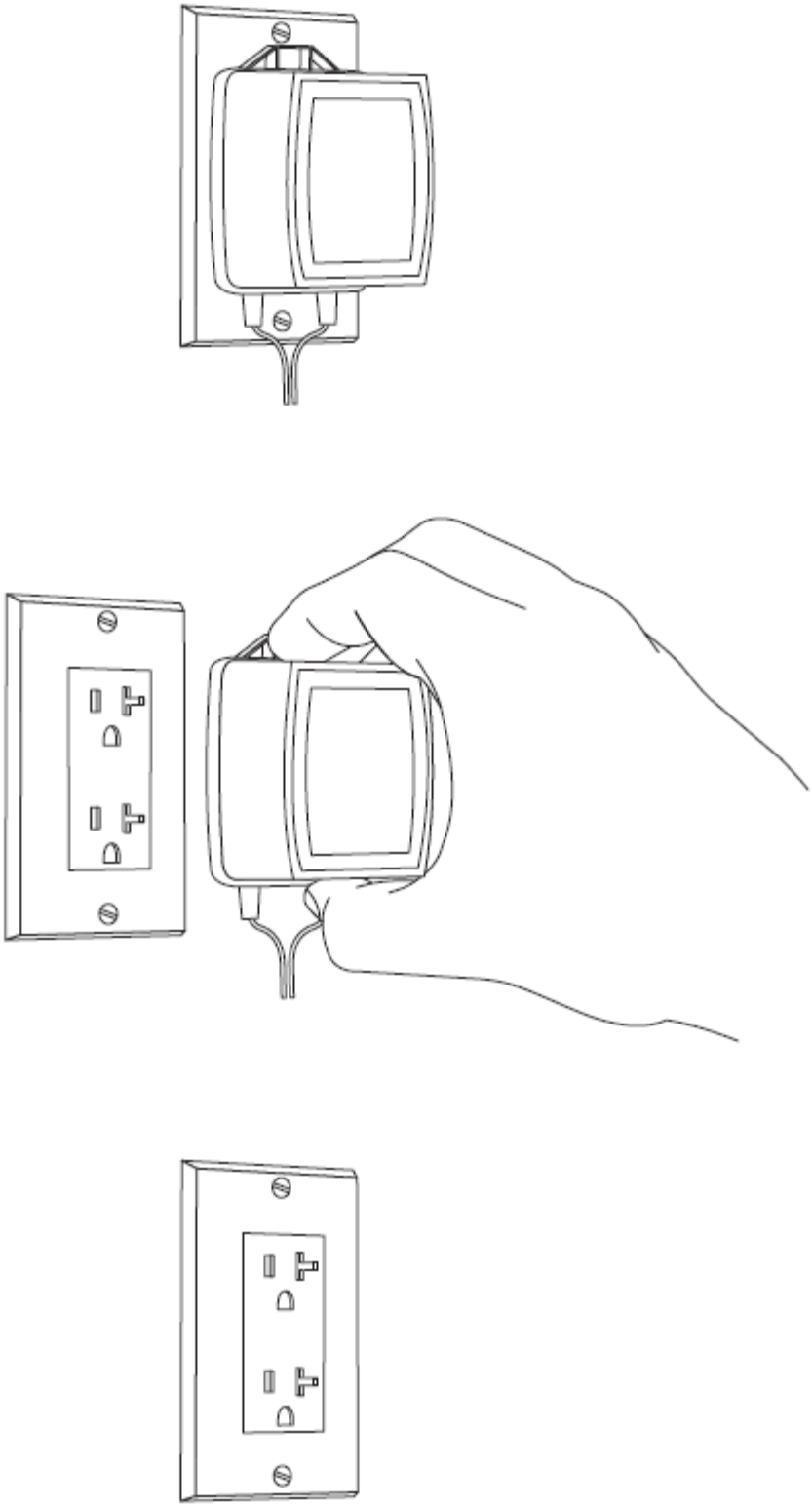

Create an Alarm.com account

1. Create a new Alarm.com customer account using the Partner Portal or MobileTech app.
2. During the account creation process, you are prompted to enter the following information:
    - 15-Digit Module Serial Number - the IMEI number located on the Alarm.com Universal Communicator (AUC) device
    - Panel Manufacturer
    - Panel Model Number
    - Panel Firmware Version (optional)
    - Communicator Phone Number - this should be 555555 if the panel monitoring station phone number was programmed as recommended in the preceding steps (555555)
    - AC Power Failure cold start option
        - For more information, see [AC Power Failure cold start restoral on Alarm.com Universal Communicators (AUC)](#).

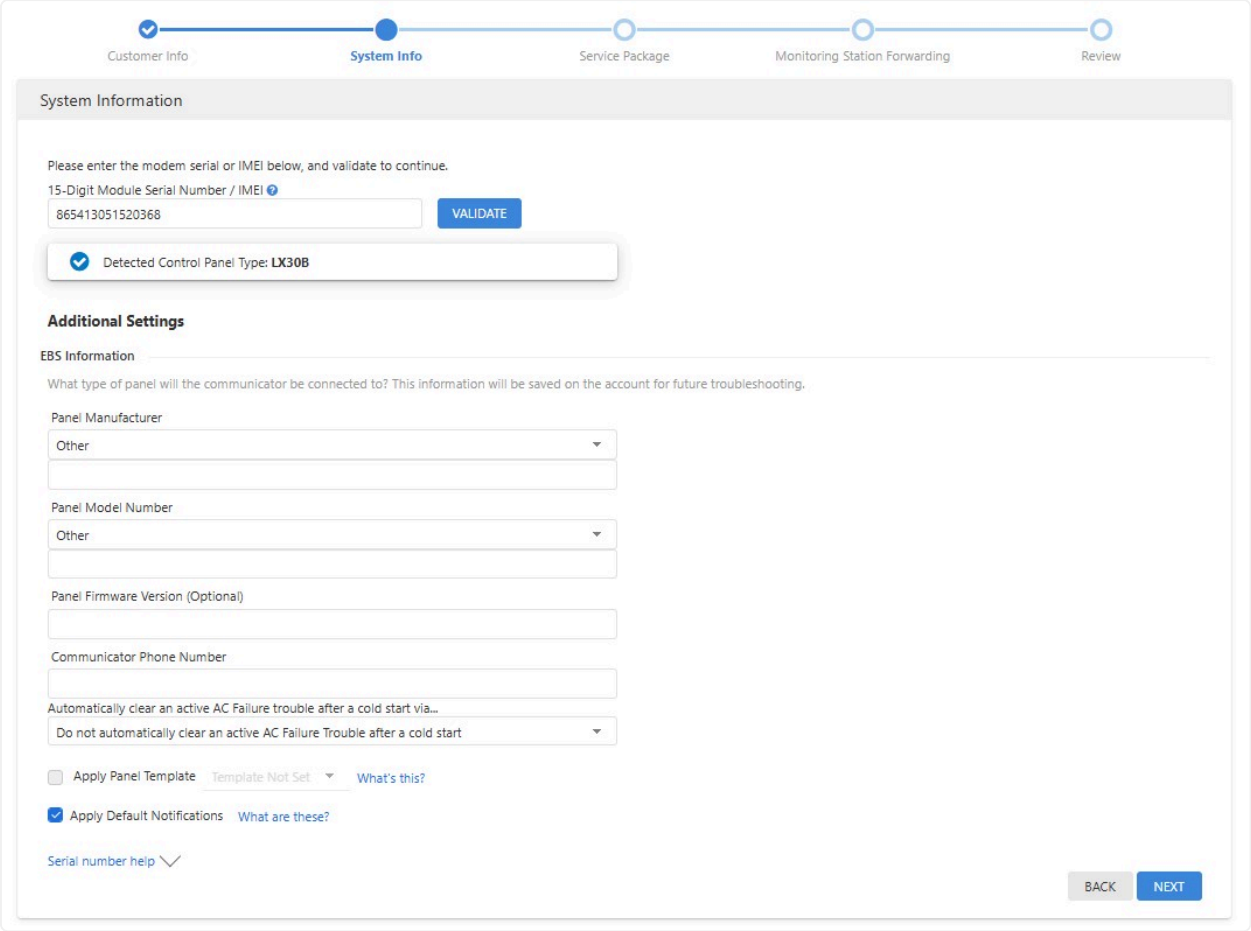

3. One of the following service packages must be selected for use with the Alarm.com Universal Communicator (AUC):

- *Wireless Signal Forwarding* (not available in Canada)
- *Universal Communicator Residential*
- *Universal Communicator Commercial*

4. At the end of the *Create New Customer* process, you are able to print or email a Welcome Letter for the customer, which includes login information for the Alarm.com Customer website.

For more information about creating a customer account, see [How to create an Alarm.com customer account](#).

Connect the Universal Communicator

Wiring

The following diagram is a reference for a generic control panel. The specific terminal names may vary based on panel type. Any wired zone or PGM can be used if supporting remote arming and status, but the instructions use Z1 (zone 1) and PGM1.

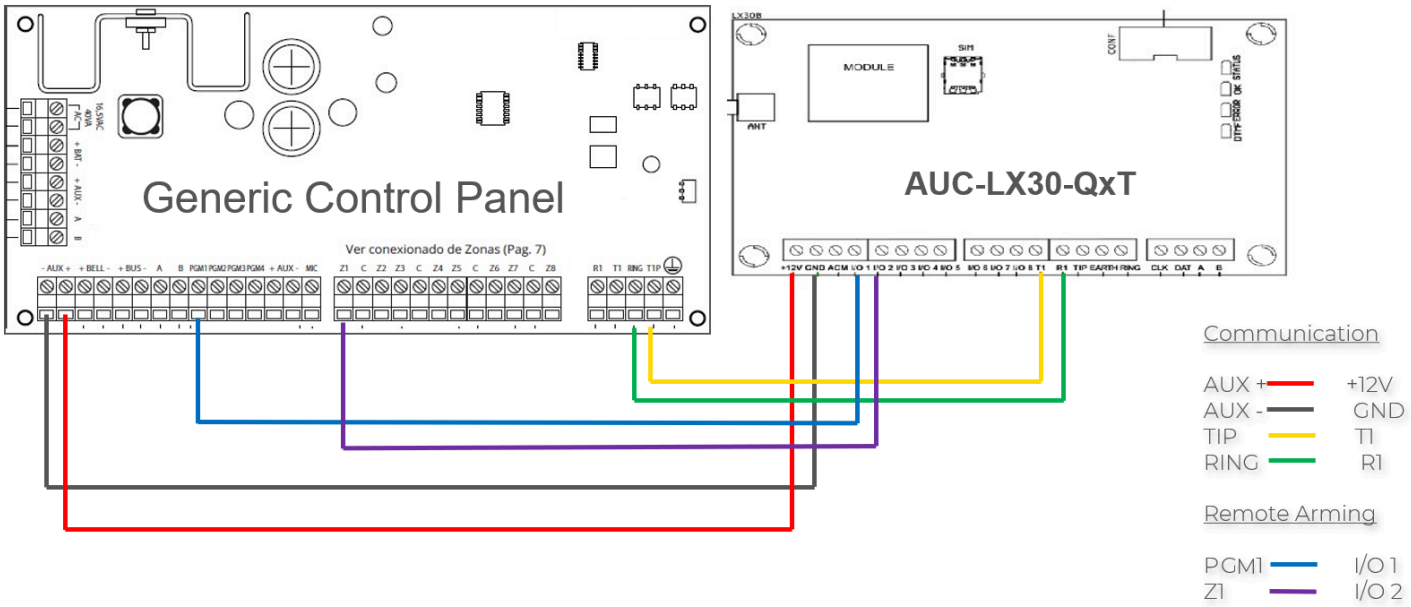

Important: Depending on the panel model, an end-of-line resistor may be required for the keyswitch zone. Refer to the panel manufacturer documentation and support.

The following panels have articles available for their specific setup:

- [DSC Impassa](#)
- [DSC MaxSYS PC4020A V3.52](#)
- [DSC PC585](#)
- [DSC Power832 (PC5010)](#)
- [DSC PowerSeries Neo](#)
- [DSC PowerSeries PC1616/PC1832/PC1864](#)

- GE Concord 4
- GE Hills NX-4V2
- GE Hills NX-6V2 (EU)
- GE Hills NX-8V2
- HKC SW-10270
- Honeywell Galaxy 2-12
- Honeywell Galaxy Dimension 96
- Honeywell Galaxy Dimension 96 (Double Balanced version)
- Honeywell Vista 15P/20P/21IP
- Honeywell Vista128BPT
- Honeywell Vista48LA
- Honeywell Vista50P
- Intelbras AMT 2018 E SMART
- Intelbras AMT 4010 SMART
- NAPCO Gemini P9600
- PIMA HUNTER 8 (Captain 8)
- PIMA-HUNTER-Pro-832
- Paradox EVO192
- Paradox EVO48
- Paradox SP4000/6000
- Texecom Premier 412/832

To wire the panel

1. To power the LX30B-AUC, connect the LX30B-AUC terminals **+12V** and **GND** to panel terminals **AUX+** and **AUX-** (or equivalent panel terminals).
2. To allow communication, connect the LX30B-AUC terminals **T1** and **R1** to panel terminals **Ring** and **Tip** (or equivalent panel terminals).
3. To remotely track the panel arming status, connect the LX30B-AUC terminal **IO1** to panel terminal **PGM1** (or equivalent panel terminal).
4. To remotely change the panel arming status, connect LX30B-AUC terminal **IO2** to panel terminal **Z1** (or equivalent panel terminal).
5. Connect the antenna to the LX30B-AUC, screw it into the antenna coax terminal.
6. Route the cables and the 4G/LTE antenna outside of the enclosure and put the enclose cover back on.

Note: The antenna's coax connection with the module is different from the snap MMCX connection of other Alarm.com modules.

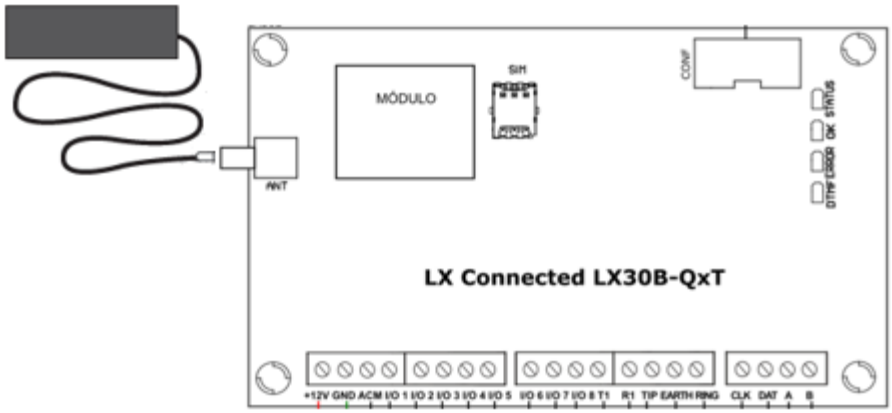

Recommendations

- The maximum distance from the LX30B-AUC to the control panel is 10 feet (or about 3 meters).
- Use wire gauge 14-22 AWG. No version of CAT5/CAT6 cable is sufficient.
- The electric current performance of the OUT1 and OUT2 outputs is 100mA. They should not be short-circuited to supply voltage, as this will cause permanent damage.
- Do not connect power to the Universal Communicator until the antenna is connected, as this could damage the radio module.

Communication with Alarm.com

Power on the panel

Connect the backup battery and restore AC power to the control panel. Wait 10 minutes before using the keypad or sending commands to allow the LX30B-AUC to initialize.

Verify LEDs

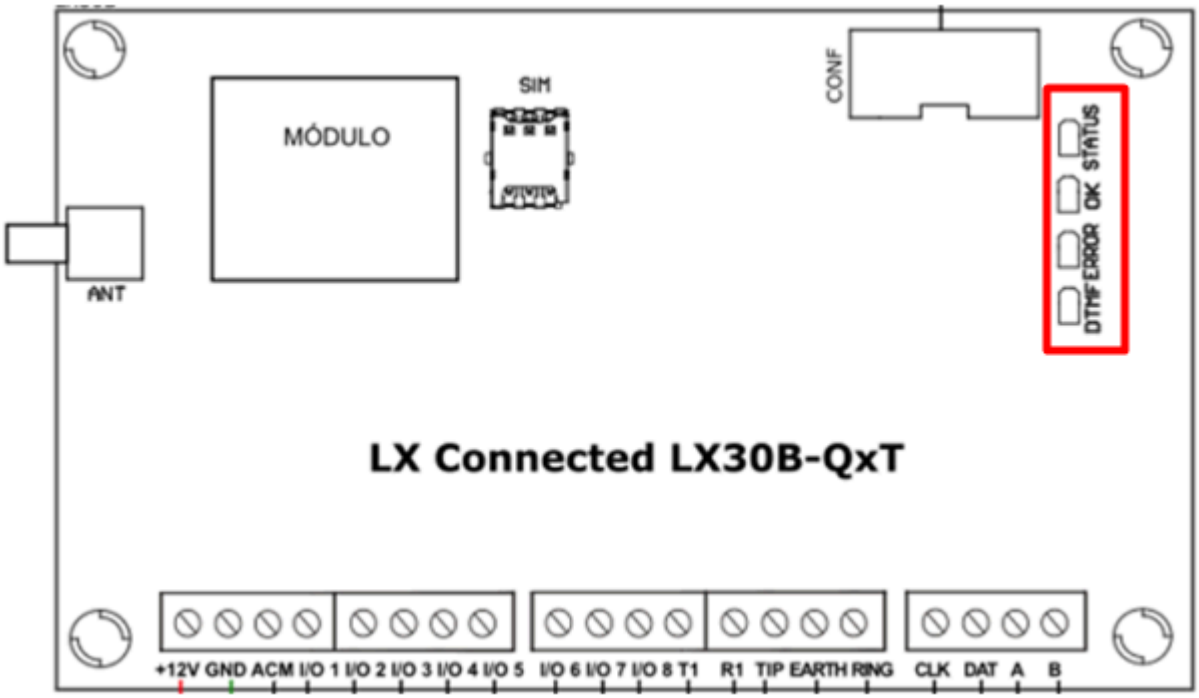

- Verify the *OK* LED (green) flashes at least two times to indicate two bars of signal strength.
- Verify the *DTMF* LED (yellow) flashes when sending data to the Universal Communicator . The Status LED (blue) will flash as confirmation of the handshake.

For more information about the LEDs, see Alarm.com Universal Communicator (AUC) - Module LED Guide.

Confirm communication

Before completing the installation, verify that the LX30B-AUC is communicating with the panel and Alarm.com by verifying:

1. All alarms are reporting correctly to Alarm.com and the monitoring station.
2. If using a keyswitch or PGM to remotely interact with the panel, verify the status or commands are correct or successful.

If the LX30B-AUC is not communicating, see Alarm.com Universal Communicator (AUC) - Troubleshooting Guide.

Regulatory information for LX30B-QxxT

FCC

This device complies with part 15 of the FCC Rules. Operation is subject to the following two conditions:

1. This device may not cause harmful interference.

2. This device must accept any interference received, including interference that may cause undesired operation.

Note: This equipment has been tested and found to comply with the limits for a Class B digital device, pursuant to part 15 of the FCC Rules. These limits are designed to provide reasonable protection against harmful interference in a residential installation. This equipment generates, uses and can radiate radio frequency energy and, if not installed and used in accordance with the instructions, may cause harmful interference in radio communications. However, there is no guarantee that interference will not occur in a particular installation. If this equipment does cause harmful interference to the radio or television reception, which can be determined by turning the equipment off and on, the user is encouraged to try to correct the interference by one or more of the following measures:

- Reorient or relocate the receiving antenna.
- Increase the separation between the equipment and receiver.
- Connect the equipment into an outlet on a circuit different from that to which the receiver is connected.
- Consult the dealer or an experienced radio/TV technician for help.
- Changes or modifications not expressly approved by the party responsible for compliance could void the user ‘s authority to operate the equipment.

Contains FCC ID: XMR2023EG915QNA

IC / ISED Notice

This Class B digital apparatus complies with Canadian ICES-003.

Cet appareil numérique de classe B est conforme à la norme canadienne ICES-003.

This device contains license-exempt transmitter(s)/receiver(s) that comply with Innovation, Science and Economic Development Canada's licence-exempt RSS(s). Operation is subject to the following two conditions:

1. This device may not cause interference.
2. This device must accept any interference, including interference that may cause undesired operation of the device.

Cet appareil contient des émetteurs/récepteurs sans licence qui sont conformes aux RSS sans licence d'Innovation, Sciences et Développement économique Canada. L’exploitation est soumise aux deux conditions suivantes :

1. Cet appareil ne doit pas provoquer d'interférences.
2. Cet appareil doit accepter toute interférence, y compris les interférences susceptibles de provoquer un fonctionnement indésirable de l'appareil.

Contains IC: 10224A-023EG915QNA

RF Exposure

This equipment complies with FCC and ISED radiation exposure limits set forth for an uncontrolled environment. This equipment should be installed and operated at a minimum distance of 20cm between the equipment and your body. This device and its antenna(s) must not be co-located or operating in conjunction with any other antenna or transmitter. Please contact intsupport@alarm.com for more information on Canadian RF exposure compliance.

Cet appareil est conforme aux limites d'exposition aux radiofréquences établies par la FCC et l'ISED pour un environnement non contrôlé. Cet appareil doit être installé et utilisé à une distance minimale de 20 centimètres entre l'appareil et votre corps. Cet appareil et son ou ses antennes ne doivent pas être situés ou fonctionner en conjonction avec une autre antenne ou un autre émetteur. Veuillez communiquer avec intsupport@alarm.com pour obtenir plus d'information sur la conformité aux exigences canadiennes en matière d'exposition aux radiofréquences