LGNXTO4CVLWF / LGNXTO4CVLWFB

4.1 MP CHROMAVIEW LITE Fixed Turret Network Camera / Black

NDAA Compliant

4 MP | Built-in Mic | IP67

- ***High-definition imaging with an 4.1 MP resolution***
- ***Classification of human and vehicle targets through intelligent analysis***
- ***CHROMAVIEW LITE: 24/7 full-color imaging***
- ***IR illumination up to 30 m***
- ***IP67 protection rating against water and dust***
- ***Built-in microphone***

Dimensions

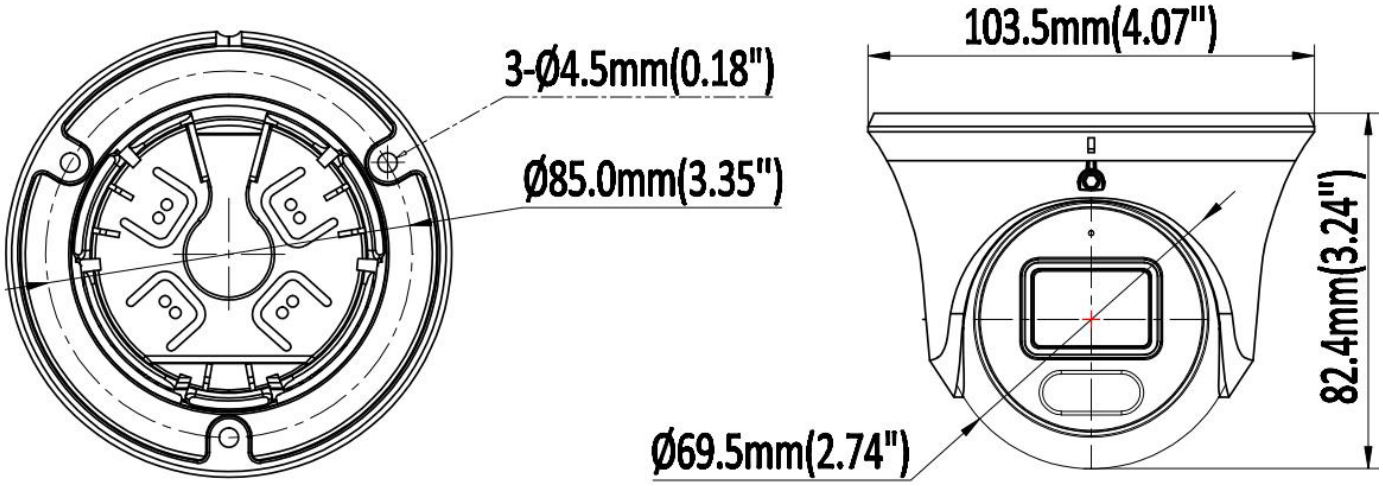

*Design and specifications are subject to change without notice - Version 2026-01-23

LGNXTO4CVLWF - 4.1 MP CHROMAVIEW LITE Fixed Turret Network Camera
LGNXTO4CVLWFB - 4.1 MP CHROMAVIEW LITE Black Fixed Turret Network Camera

Camera

Image Sensor
1/2.7” Progressive Scan CMOS

Minimum Illumination
0.004 lux at F1.0

Illumination Distance
IR: up to 30 m

Smart IR
Supported

Strobe Light
N/A

Pan / Tilt / Rotation
0° to 360° / 0° to 75° / 0° to 360°

Lens

Focal Length
2.8 mm

Aperture
F1.0

Field of View
HORIZONTAL : 101°
VERTICAL : 54°
DIAGONAL : 120°

Mount
M12

Compression

Video Compression
H.264 / H.264+ / H.265 / H.265+ / MJPEG

H.265 Codec Profile
Main

H.264 Codec Profile
Base / Main / High

Video Bit Rate
11 Kbps to 6 Mbps

Multiple Streams
Triple streams

Audio Compression
G.711A, G.711U

Audio Bit Rate
64 Kbps

Image

Maximum Resolution
4MP (2688 × 1520)

Main Stream	
50Hz	**60Hz**
25 fps 4MP (2688 × 1520)	30 fps 4MP (2688 × 1520)
25 fps 3MP (2304 × 1296)	30 fps 3MP (2304 × 1296)
25 fps 1080P (1920 × 1080)	30 fps 1080P (1920 × 1080)
25 fps 1.3MP (1280 × 960)	30 fps 1.3MP (1280 × 960)
25 fps 720P (1280 × 720)	30 fps 720P (1280 × 720)

Sub Stream	
50Hz	**60Hz**
25 fps D1 (704 × 576)	30 fps D1 (704 × 480)
25 fps VGA (640 × 480)	30 fps VGA (640 × 480)
25 fps CIF (352 × 288)	30 fps CIF (352 × 240)

Third Stream	
50Hz	**60Hz**
25 fps CIF (352 × 288)	30 fps CIF (352 × 240)

Image Settings

Parameters
Brightness / Contrast / Saturation / Hue / Sharpness

Shutter
Auto / Manual, 1/3 to 1/100000 s

Day / Night
24-7 Color

WDR
120 dB

Noise Reduction
2D / 3D DNR

Back Light Compensation (BLC)
Supported

High Light Compensation (HLC)
Supported

Region of Interest (ROI)
Supported

Rotation
Supported

*Design and specifications are subject to change without notice - Version 2026-01-23

LGNXTO4CVLWF - 4.1 MP CHROMAVIEW LITE Fixed Turret Network Camera
LGNXTO4CVLWFB - 4.1 MP CHROMAVIEW LITE Black Fixed Turret Network Camera

Smart Features

Basic Events
Motion detection, video tampering

Smart Events
Smart motion detection, line crossing, area intrusion, region entrance/exiting with human/vehicle filtering

Face Detection
N/A

Network

Storage
NAS (NFS, SMB/CIFS)

Protocols
TCP/IP, ICMP, HTTP, HTTPS, FTP, DHCP, DNS, DDNS, RTP, RTSP, RTCP, NTP, IGMP, UPnP, SMTP, UPnP-TM, P2P

Compatibility
ONVIF (Profile S, G, T), SDK

Security
IP address filtering, HTTP/HTTPS basic and digest authentication, TLS 1.1/1.2, WSSE

Users
10

Browsers
IE10, IE11; Chrome 57+; Firefox 52+

Mobile
iOS, Android

Active Deterrence

Red/Blue Light
N/A

Sound Warning
N/A

Interface

Network
1 × RJ45 10/100 Mbps

On-board Storage
Up to 256 GB

Microphone
Supported

Speaker
N/A

Audio Input / Output
N/A

Alarm Input / Output
N/A

Reset Button
N/A

General

Operating Conditions
-40 °C to 60 °C

Humidity
≤ 95% non-condensing

Power Supply
DC12V ± 25%

PoE
802.3af

Power Consumption
Maximum 5.4W

Protection
IP67, 2kV

Material
Metal

Dimensions
Φ103.5 × 82.4 mm

Weight
450 g

*Design and specifications are subject to change without notice - Version 2026-01-23

Accessories

XLGNXLB10 / XLGNXLB10B
Junction Box

XLGNXPM03
Pole Mount

XLGNXLB14C / XLGNXLB14CB
Wall Mount

XLGNXCM700
Pendant Mount

Accessories Mount

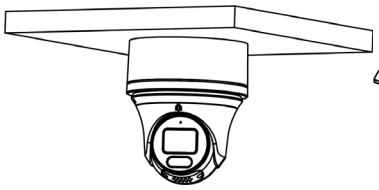

XLGNXLB10

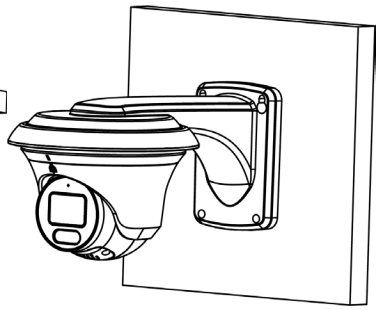

XLGNXLB14C

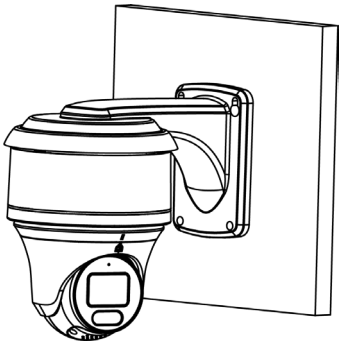

XLGNXLB10 + XLGNXLB14C

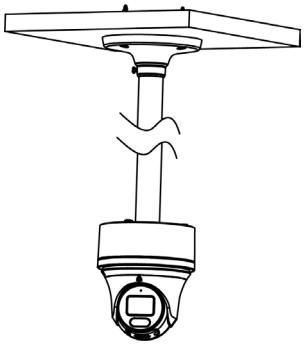

XLGNXLB10 + XLGNXCM700

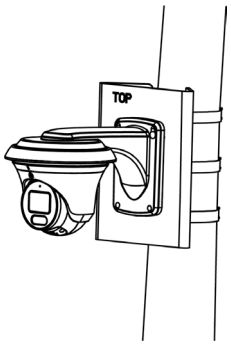

XLGNXLB14C + XLGNXPM03

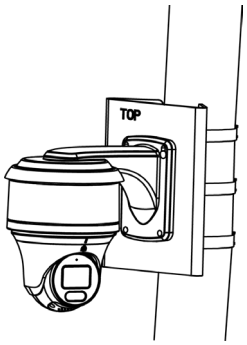

XLGNXLB10 + XLGNXLB14C + XLGNXPM03

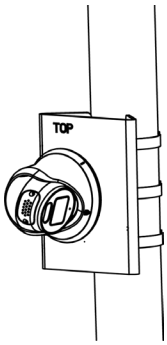

XLGNXPM03

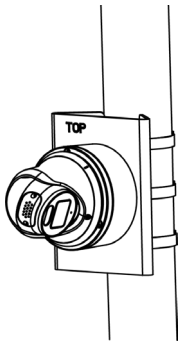

XLGNXLB10 + XLGNXPM03

*Design and specifications are subject to change without notice - Version 2026-01-23