Lumaris Tape Light Solutions

The Lutron tape light solution takes scene control to the next level, offering a simple and seamless way to add accent lighting to Lutron connected home projects.

Built on the ultra-reliable Lutron Clear Connect–Type X wireless technology, Lutron tape light wireless controllers are native components within the Lutron platform including controls, apps, programming software, and Lutron Connect cloud services.

A complete Lutron tape light solution consists of field-cuttable LED tape, a wireless controller with integrated LED drivers, high-reliability punch connectors, dedicated wiring, and a power supply or interface. For an added level of quality, install the tape light inside the Lutron LED tape extrusions.

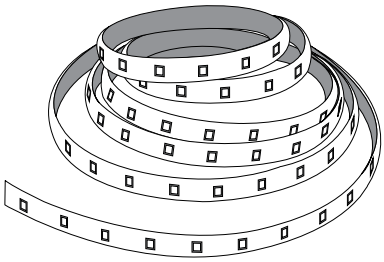

LED Tape

Features

Lighting System

- Seamless integration with HomeWorks QSX and RadioRA 3
- User-programmable intensity and color temperature presets
- Warm dim to mimic the dimming curve of an incandescent lamp
- Automatically changes color temperature based on time of day
- Manual adjustments via the Lutron app or third-party integration

Lumaris Tunable White Wireless Controller

- 2-Channel, continuous, flicker-free dimming from 100% down to 0.1% of measured light output[1]
- 32 W rated load (16.4 ft [5 m] of 2-channel LED tape)
- 50,000 hours rated lifetime[2]
- Uses Clear Connect–Type X wireless communication
- Low-profile, easy to hide

Multi-Channel Wireless Controller

- 5-Channel, continuous, flicker-free dimming from 100% down to 0.1% of measured light output[1]
- 96 W rated LED load (up to 32.8 ft [10 m] of 5-channel LED tape)
- 50,000 hours rated lifetime
- Uses Clear Connect–Type X wireless communication
- Compact, easy to hide

[1] Tunable white performance is maintained from 100% to 1%.
[2] Plug-in power supply lifetime is rated for 50,000 hours in up to a 77 °F (25 °C) ambient temperature. Increasing ambient temperature may degrade lifetime.

Tape Light Solution

Components

- Tape light
- Wireless controller
- Power interface
- Wire-to-tape connectors

Optional Components

- Extrusions

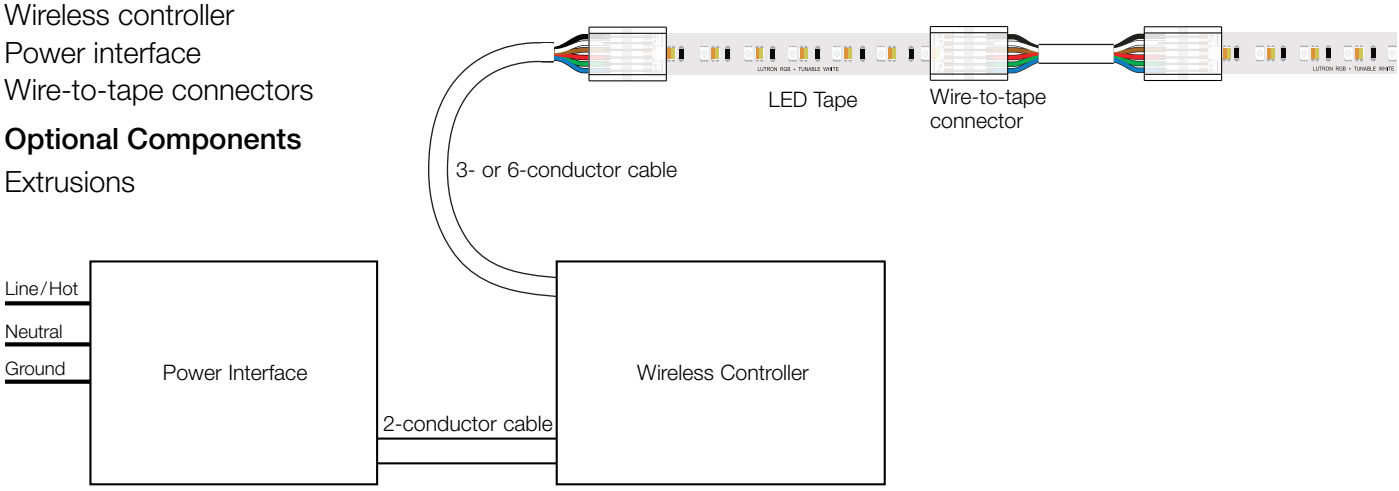

Lumaris Tape Light Solutions

Model Numbers

LED Tapes

Model Number	Description	Reel Length	Maximum Total Tape Length per Controller	
			Tunable White xxL-TWCL-WH[1]	Multi-channel xxL-MWCL-WH[1]
LU-T05-SW	Soft white LED tape (1800 K - 3000 K)[2]	16.4 ft (5 m)	16.4 ft (5 m)	Not Compatible
LU-T30-SW		98.4 ft (30 m)		
LU-T05-DL	Daylight LED tape (2500 K - 5000 K)[2]	16.4 ft (5 m)	16.4 ft (5 m)	Not Compatible
LU-T30-DL		98.4 ft (30 m)		
LU-T05-TW-IN	Tunable white LED tape (1800 K - 4000 K)[2]	16.4 ft (5 m)	16.4 ft (5 m)	49.2 ft (15 m)[4]
LU-T30-TW-IN		98.4 ft (30 m)		
LU-T05-RT-IN	RGB + tunable white LED tape (RGB, 1800 K – 4000 K)[3]	16.4 ft (5 m)	Not Compatible	32.8 ft (10 m)[4]
LU-T30-RT-IN		98.4 ft (30 m)		

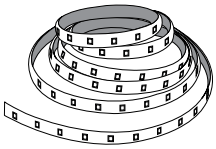

LED Tape

[1] "xx" in the model number represents either "HW" for HomeWorks or "RR" for RadioRA 3.
[2] Please refer to Lutron P/N 3691304 at www.lutron.com for further details.
[3] Please refer to Lutron P/N 3691305 at www.lutron.com for further details.
[4] Must be split into parallel runs, each no more than 16.4 ft (5 m). See the **Wiring** section for details.

Wireless Controllers

Model Number		Description
HomeWorks QSX	RadioRA 3	
HWL-MWCL-WH	RRL-MWCL-WH	Multi-channel wireless controller
HWL-TWCL-WH	RRL-TWCL-WH	Lumaris tunable white wireless controller
HWL-TWC-WH	RRL-TWC-WH	Lumaris tunable white wireless controller with plug-in power supply (T120-24DC-15)

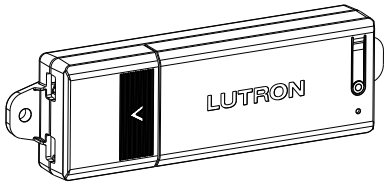

Multi-channel Wireless Controller

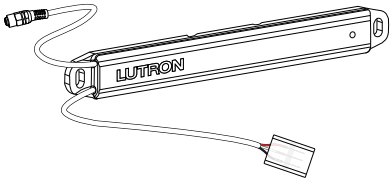

Lumaris Tunable White Wireless Controller

Lumaris Tape Light Solutions

Model Numbers *(continued)*

Power Interfaces

Model Number	Description	Compatible Wireless Controllers	
		Tunable White Controller xxL-TWCL-WH[1]	Multi-channel Controller xxL-MWCL-WH[1]
T120-24DC-15	36 W plug-in power supply	X	
LU-PH3-A	Power interface with three barrel-to-terminal adapters[2]	X	X
LU-PH3-B	Power interface with flying leads	X	X
LU-BP1	Barrel-to-terminal adapter (qty 3)[2]	X	

[1] "xx" in the model number represents either "HW" for HomeWorks or "RR" for RadioRA 3.
[2] Barrel-to-terminal adapters are for use with tunable white controller only.

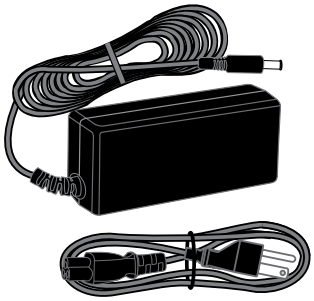

Plug-in Power Supply

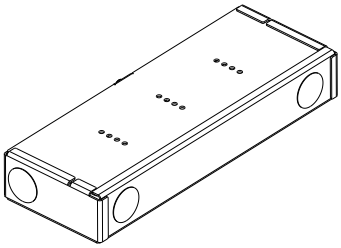

Lutron 96 W Tape Light Power Interface

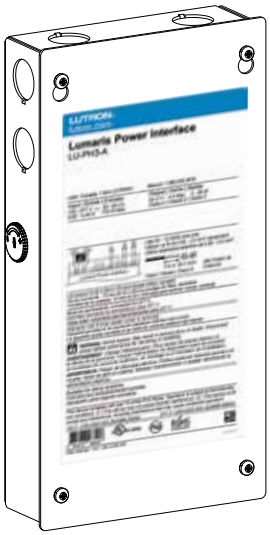

Lumaris Power Interface

Kits

Model Number		Description
HomeWorks QSX	RadioRA 3	
HWL-MTK-RT-IN	RRL-MTK-RT-IN	RGB + Tunable White Kit • Wireless controller (with power interface LU-PH3-B) • RGB + Tunable White LED Tape – 2 pc. 16.4 ft (5 m) reel; 32.8 ft (10 m) total • Wire-to-tape connectors (qty. 4) • 2-conductor cable – 4 ft (1.2 m) • 6-conductor cable – 2 pc. 10 ft (3 m); 20 ft (6 m) total
HWL-TLK-TW-IN	RRL-TLK-TW-IN	Tunable White Kit • Wireless controller (with plug-in power supply) • Tunable white LED tape (1800 K - 4000 K) - 16.4 ft (5 m) reel • Wire-to-tape connectors (qty. 5) • 3-conductor cable - 10 ft (3 m)
HWL-TLK-SW	RRL-TLK-SW	Soft White Kit • Wireless controller (with plug-in power supply) • Soft white LED tape (1800 K - 3000 K) - 16.4 ft (5 m) reel • Wire-to-tape connectors (qty. 5) • 3-conductor cable - 10 ft (3 m)
HWL-TLK-DL	RRL-TLK-DL	Daylight Kit • Wireless controller (with plug-in power supply) • Daylight LED tape (2500 K - 5000 K) - 16.4 ft (5 m) reel • Wire-to-tape connectors (qty. 5) • 3-conductor cable - 10 ft (3 m)

Lumaris Tape Light Solutions

Model Numbers *(continued)*

Accessories

Wiring and Mounting Hardware

Model Number	Description	Compatible LED Tapes	
		Tunable White LU-Txx-SW/DL; LU-Txx-TW-IN	RGB + Tunable White LU-Txx-RT-IN
LU-CK1-TW[1]	3-pin wire-to-tape connectors (qty. 10)	X	
LU-CK1-6W[1]	6-pin wire-to-tape connectors (qty. 10)		X
LU-MK1[2]	0.394 in (10 mm) surface mounting clips (qty. 20)	X	
LU-WK1-TW	3 x 22 AWG (0.50 mm^2) cable – 50 ft (15.2 m)	X	
LU-WK1-6W	6 x 22 AWG (0.50 mm^2) cable – 50 ft (15.2 m)		X

[1] LU-CK1-6W/LU-CK1-TW **MUST** be used to connect the wire to the cut tape segments. Use LU-WK1-6W/LU-WK1-TW to guarantee proper electrical connection with LU-CK1-6W/LU-CK1-TW.
[2] The surface mounting clips are only compatible with the LU-Txx-SW, LU-Txx-DL, or the LU-Txx-TW-IN.

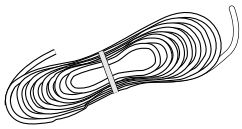

Cable

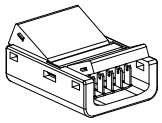

Connectors

LED Tape Extrusions[1]

Model Number	Description	Compatible Tapes	
		Tunable White LU-Txx-SW/DL; LU-Txx-TW-IN	RGB + Tunable White LU-Txx-RT-IN
LU-SR1-K	SR1 extrusion bundle	X	X
LU-SR2-K	SR2 extrusion bundle	X	X
LU-SR3-K	SR3 extrusion bundle	X	See Note
LU-45S-K	45S extrusion bundle	X	X
LU-45T-K	45T extrusion bundle	X	X
LU-RR1-K	RR1 extrusion bundle	X	See Note
LU-MI1-K	MI1 extrusion bundle	X	X

[1] Please refer to Lutron P/N 3691292 at www.lutron.com for further details and accessory packs.

NOTE: SR3 and RR1 extrusions do not fit the 6-pin wire-to-tape connectors. Connections inside the SR3 and RR1 extrusions must be through the reel's pre-soldered wire.

Lumaris Tape Light Solutions

Specifications

Wireless Controllers

Regulatory Approvals

- cULus Listed for USA and Canada
- FCC Part 15 Class B compliant
- ICES-005 compliant

Electrical

- Lumaris tunable white wireless controller
  – Input: 24 V⎓ 1.5 A
  – Output: 24 V⎓ 32 W max
- Multi-channel wireless controller
  – Input: 24 V⎓ 4.0 A
  – Output: 24 V⎓ 96 W max
- Output short-circuit and overload-protection

Environmental

- Ambient operating temperature: 32 °F to 104 °F (0 °C to 40 °C)
- Relative humidity: 0% to 90% non-condensing
- Indoor use only

Plug-in Power Supply

Regulatory Approvals

- cULus Listed for USA and Canada
- FCC Part 15 Class B compliant
- ICES-003 compliant
- US DoE Level VI compliant

Electrical

- Input: 100–240 V∼ 50/60 Hz 1 A max
- Output: 24 V⎓ 1.5 A
- Limited power supply

Environmental

- Ambient operating temperature: 32 °F to 104 °F (0 °C to 40 °C)
- Relative humidity: 0% to 90% non-condensing
- Indoor use only

Warranty

- Limited Warranty: www.lutron.com/warranty or call 1.844.LUTRON1 for a printed copy
- The warranty will not cover issues caused by use of incompatible devices (including non-Lutron LED tape and/or power supplies)

Power Interfaces

Regulatory Approvals

- cULus Listed for USA and Canada
- FCC Part 15
  – Class A (277 V∼)
  – Class B (120 V∼)
- Meets UL® 8750/CSA C22.2 No. 250.13-14, "Light Emitting Diode (LED) Equipment For Use in Lighting Products"
- Class 2 output; meets UL® 1310/CSA C22.2 No. 223-M91

Electrical

- Operating voltage: 120 V∼/277 V∼ 50/60 Hz
- Built-in thermal protection
- Open-circuit protected output
- Short-circuit and overload-protected output
- Output: 24 V⎓ constant voltage at high-end
- Output load range: 2 W to 96 W at high-end

Features

- Powers up to three Lutron tape light controllers
- Class 2 separation
  – LU-PH3-A: Barrier provided for in the wiring compartment
  – LU-PH3-B: Barrier pre-installed
- LU-PH3-A wiring
  – Redundant connections on line terminals for easy daisy-chain wiring
  – Redundant connections on output terminals allow for easy wiring of two LED tape home runs
  – Three barrel-to-terminal adapters provided for use with xxL-TWCL-WH

Environmental

- Ambient operating temperature: 32 °F to 104 °F (0 °C to 40 °C)
- Relative humidity:
  – LU-PH3-A: 0% to 90% non-condensing
  – LU-PH3-B: 5% to 95% non-condensing
- Indoor use only

Lumaris Tape Light Solutions

Wiring

Plug-in Power Supply (T120-24DC-15)

- Compatible with xxL-TWCL-WH wireless controller only. Not for use with xxL-MWCL-WH.
- The wireless controller (xxL-TWCL-WH) and power supply (T120-24DC-15) have 5.5 mm x 2.1 mm barrel connectors.
- Maximum amount of 3 x 22 AWG (0.50 mm^2) stranded cable allowed on the output of wireless controller is 10 ft (3.0 m). The cable can be added to the beginning or can be used to break up segments of LED tape.
  - 3 x 22 AWG (0.50 mm^2) stranded cable is provided with the tape light kit or it can be ordered as Lutron P/N LU-WK1-TW.
  - Up to 6 wire-to-tape connectors can be used with 10 ft (3.0 m) of cable. For every additional wire-to-tape connector used, the maximum length of cable allowed is reduced by 6 in (152.4 mm).
- Maximum length of LED tape light when using the plug-in power supply, (T120-24DC-15) is 16.4 ft (5 m) total, regardless of whether LED tape is in a single segment or broken up by cables.

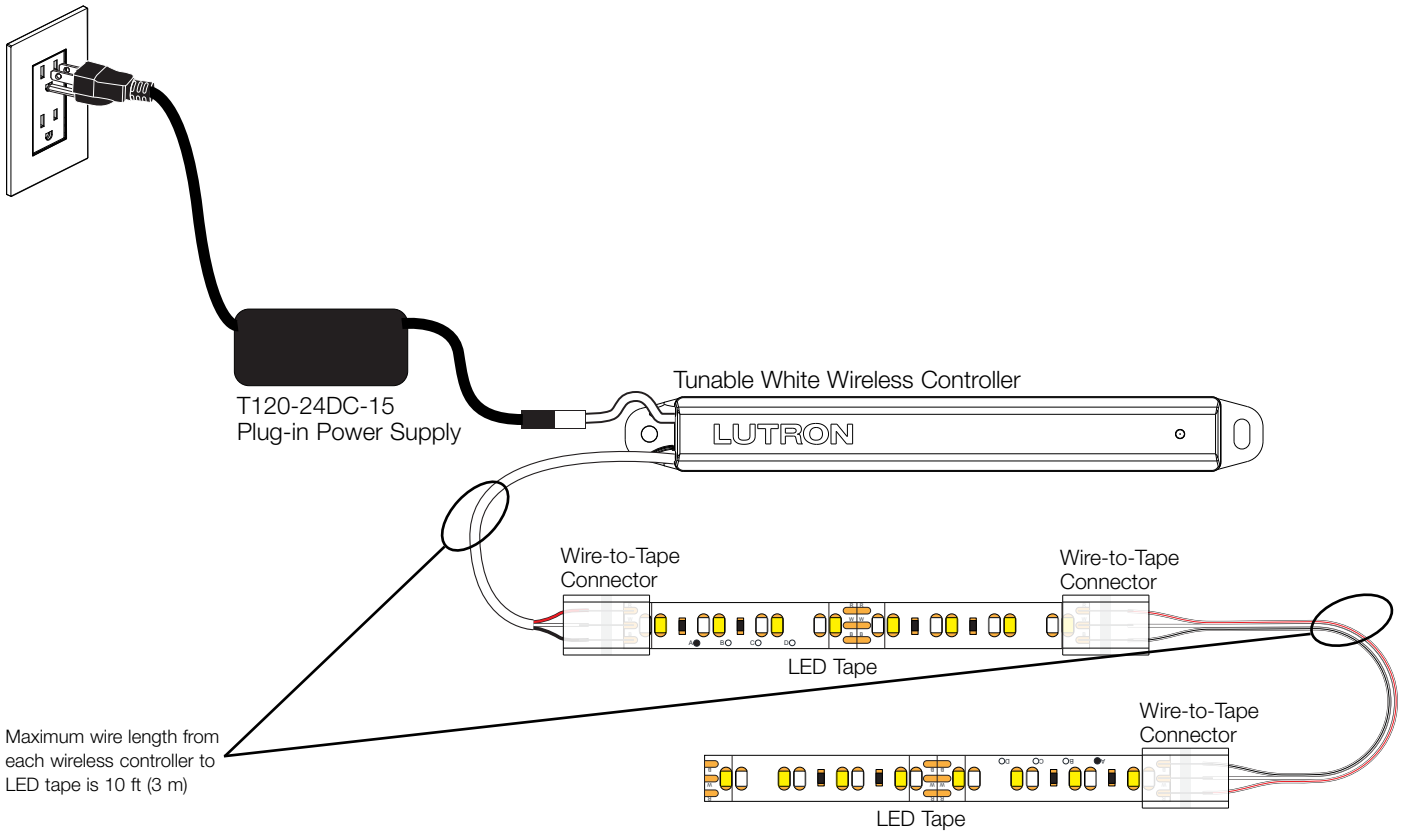

Lumaris Tape Light Solutions

Wiring *(continued)*

Power Interfaces (LU-PH3-A; LU-PH3-B)

- LU-PH3-A: Compatible with xxL-TWCL-WH or xxL-MWCL-WH wireless controllers.[1]
- LU-PH3-B: Compatible with xxL-MWCL-WH wireless controller only. Not for use with xxL-TWCL-WH.[1]
- Powers up to three wireless controllers and 96 W of LED tape meeting the following conditions:

LED Tape Wiring Requirements		
	Tunable White Controller xxL-TWCL-WH[1]	**Multi-channel Controller xxL-MWCL-WH[1]**
Maximum tape wattage per controller	32 W	96 W
Maximum tape wattage per LU-PH3-A[2]	96 W total	
Maximum tape wattage per LU-PH3-B[2]	-	96 W total
Maximum total length of a tape run[3,4], regardless of whether tape is in a single segment or broken up by cables	16.4 ft (5 m)	16.4 ft (5 m)

[1] "xx" in the model number represents either "HW" for HomeWorks or "RR" for RadioRA 3.
[2] Total of all tape powered by interface, regardless of number of controllers used.
[3] See Application Note #830 (P/N 048830) at www.lutron.com for examples.
[4] Applies for all tapes, regardless of W/ft.

- LU-PH3-A is grounded by a terminal connection. LU-PH3-B is grounded by a grounding screw.
- If wireless controllers are programmed in separate zones, certain wiring configurations are better at minimizing any interactions between zones:
  - **GOOD:** LED +/- wires are in a T-tap configuration to one power interface **(Wiring Diagram B)**
  - **BETTER:** LED +/- wires are in a homerun configuration to one power interface **(Wiring Diagram A)**
  - **BEST:** Each controller is powered by its own dedicated power interface
- If wireless controllers are programmed in a single zone, LED+ and LED- wires can be wired either in a homerun or T-tap configuration **(Wiring Diagram A or Wiring Diagram B)** without concern of interaction between controllers.

Lumaris Tape Light Solutions

Wiring *(continued)*

Note: Wiring information below is based on (1) LU-PH3-A power interface powering (3) Lutron wireless controllers, each with 32 W of LED tape. For more details regarding other wiring configurations, see Application Note #830 (P/N 048830) at www.lutron.com.

- Maximum wire length between the power interface and wireless controller for different wire sizes is listed below.

	Maximum Wire Length from Power Interface to the Wireless Controller: ft (m)				
Controller Type	**12 AWG (4.0 mm^2)**	**14 AWG (2.5 mm^2)**	**16 AWG (1.5 mm^2)**	**18 AWG (1.0 mm^2)**	**20 AWG (0.75 mm^2)**
Tunable White Controller	75 (22.9)	50 (15.2)	30 (9.1)	20 (6.1)	10 (3.0)
Multi-channel Controller	60 (18.3)	38 (11.6)	25 (7.6)	15 (4.5)	9 (2.7)

- LU-PH3-A: Terminals on the power interface accept 12 AWG to 20 AWG (4.0 mm^2 to 0.75 mm^2).
  - Each screw terminal may only accept one wire.
  - Barrel-to-terminal adapter terminals accept 16 AWG to 20 AWG (1.5 mm^2 to 0.75 mm^2). Torque to 5 in-lbs (0.5 N•m).
  - If using 14 AWG (2.5 mm^2) or 12 AWG (4.0 mm^2) wire for LED+ and LED- wires from the power interface to the barrel-to-terminal adapter, splice a small piece of 16 AWG (1.5 mm^2) wire onto a 12 AWG (4.0 mm^2) or 14 AWG (2.5 mm^2) wire to insert into the barrel-to-terminal adapter.
- LU-PH3-B: Use provided wire connectors to connect flying leads to wire per instructions printed on the connector bag.
- Maximum amount of control wire allowed on the output of the wireless controller is 10 ft (3.0 m). The control wire can be added to the beginning or can be used to break up segments of LED tape. If more control wire is needed, see Application Note #830 (P/N 048830) at www.lutron.com for guidance.
  - Up to 6 wire-to-tape connectors can be used with 10 ft (3.0 m) of cable. For every additional wire-to-tape connector used, the maximum cable length allowed is reduced by 6 in (152.4 mm).
  - 3 x 22 AWG (0.50 mm^2) stranded cable is provided with the tape light kit xxL-TWC-WH. Additional control wire can be ordered as Lutron P/N LU-WK1-TW.
  - 6 x 22 AWG (0.50 mm^2) stranded cable is provided with the tape light kit xxL-MTK-RT-IN. Additional control wire can be ordered as Lutron P/N LU-WK1-6W.

Lumaris Tape Light Solutions

Wiring *(continued)*

Wiring Diagram A: Homerun Wiring Configuration

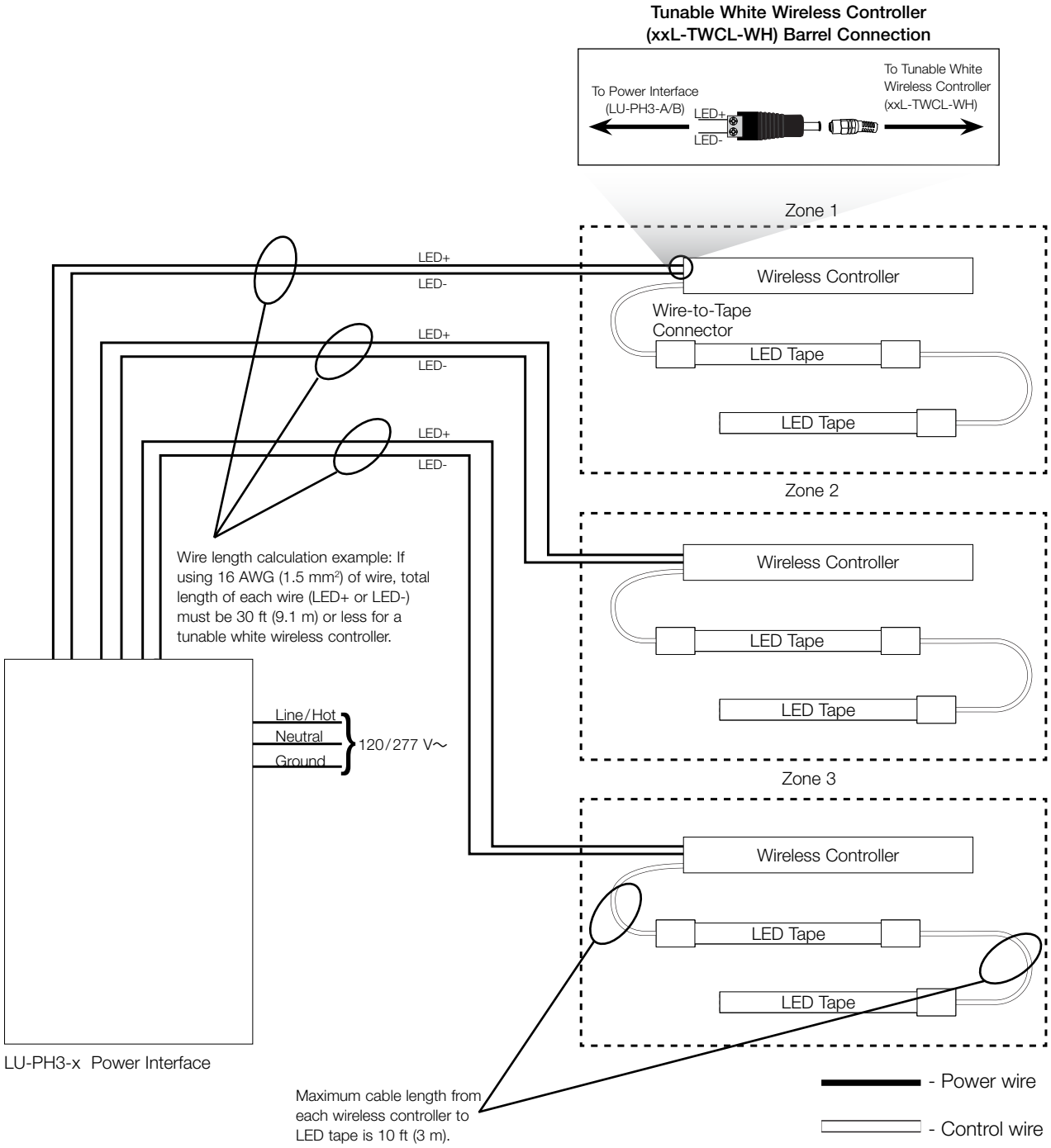

Note: (LU-PH3-A only) When wiring 3 zones (wireless controllers) to the power interface, two of the three wireless controller LED+ and LED- wires need to be spliced together in the power interface wiring compartment into a single wire run to the terminal block. LED+ and LED- terminals on the wireless controller accept one wire per terminal only.

Lumaris Tape Light Solutions

Wiring *(continued)*

Wiring Diagram B: T-tap Wiring Configuration*

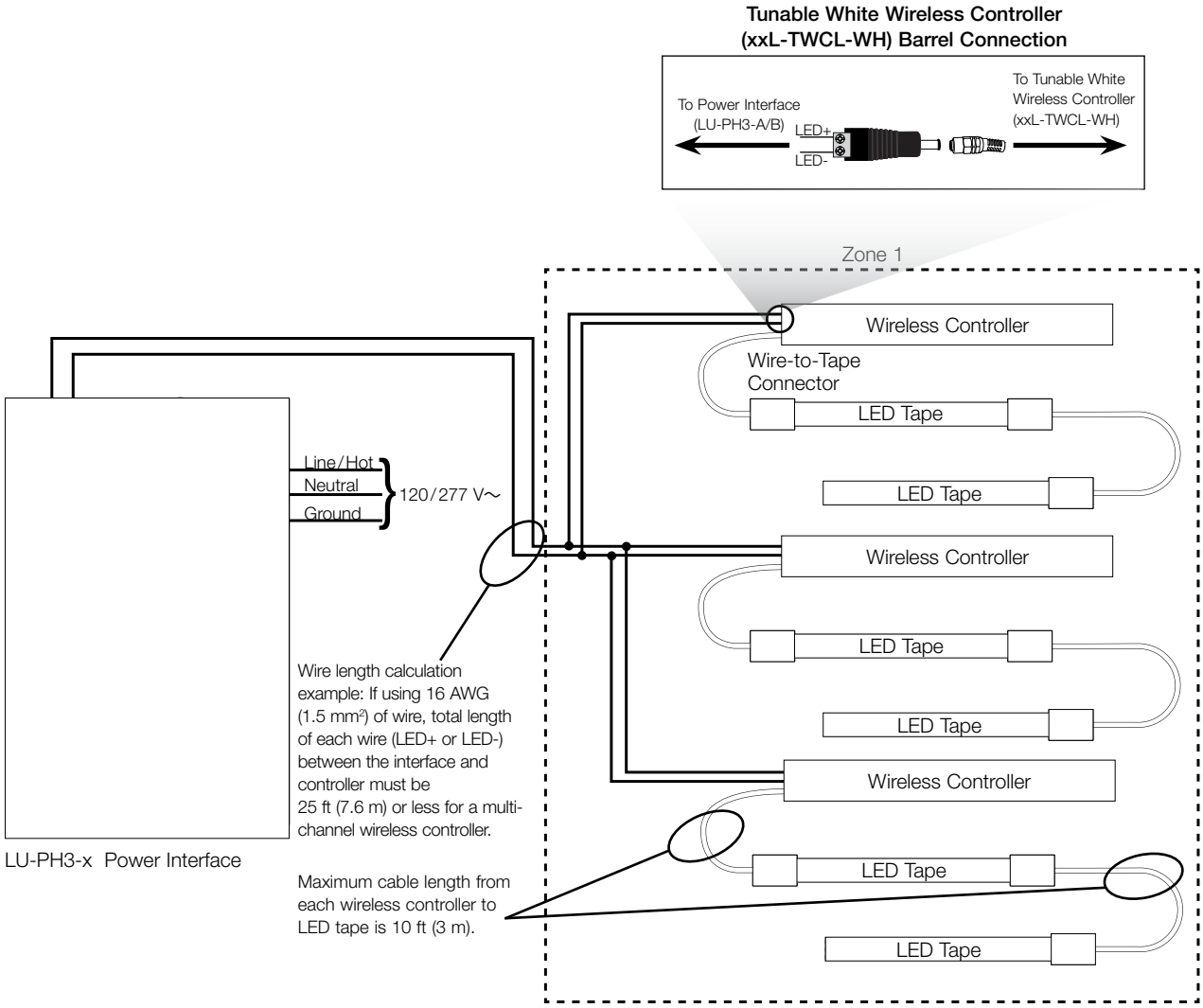

* May result in subtle interaction between controllers programmed in separate zones.

Lumaris Tape Light Solutions

Wiring *(continued)*

Example 1: Maximizing Tape on One xxL-MWCL-WH

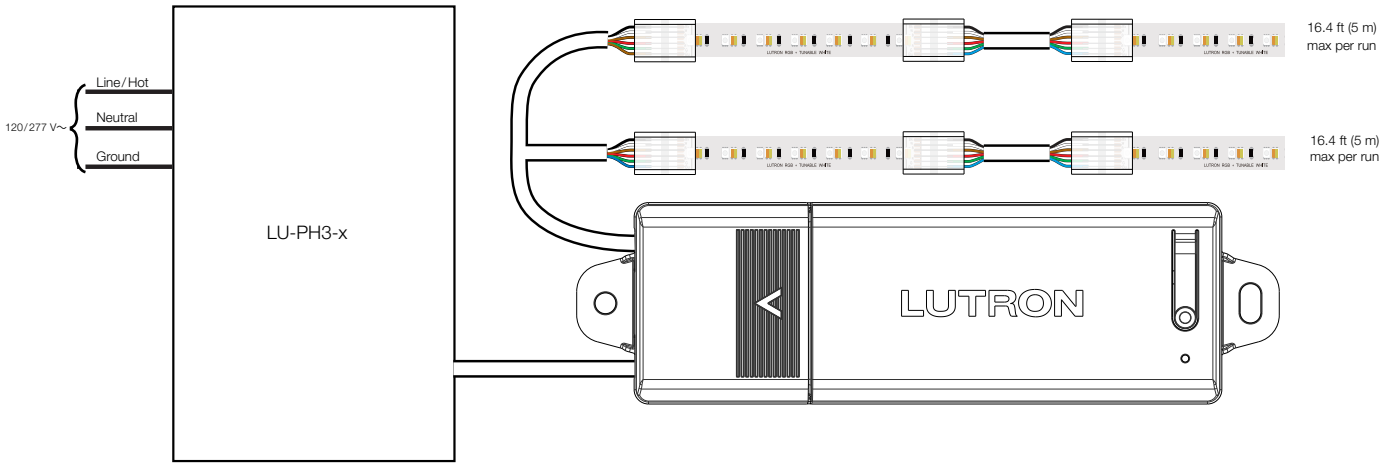

In this example, 32.8 ft (10 m) total of tape is wired to the multichannel controller. This is achieved here with two parallel runs, each 16.4 ft (5 m) long. Lengths greater than 16.4 ft (5 m) are not allowed. Since the RGB + Tunable White tape consumes about 2.9 W/ft and we have utilized 32.8 ft (10 m) of tape, the LU-PH3 is at its maximum rating of 96 W and another controller cannot be added to this interface. **Note:** All tape connected to the controller will be controllable as one fixture.

Example 2: Maximizing Tape Across Multiple xxL-MWCL-WH

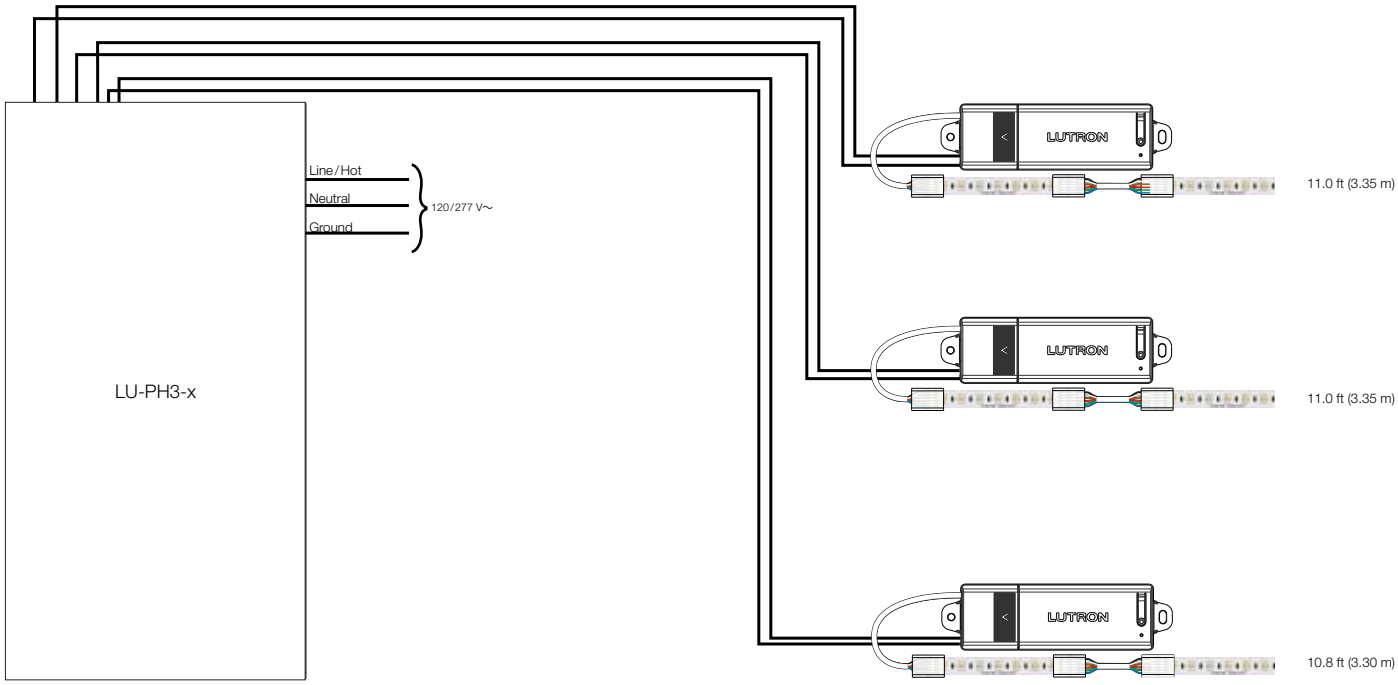

In this example, 32.8 ft (10 m) of tape is distributed across three multichannel controllers. This is achieved here with three segments of tape, each approximately 11 ft (3.35 m) long. Any combination totaling 32.8 ft (10 m) or less is acceptable, as long as no tape run exceeds 16.4 ft (5 m) similar to Example 1. Since the RGB + Tunable White tape consumes about 2.9 W/ft and we have utilized 32.8 ft (10 m) of tape, the LU-PH3 is at its maximum rating of 96 W. We have maximized the interface's capability, and cannot add more tape to any of the controllers. **Note:** All tape connected to a controller will be controllable as one fixture, and each controller can be programmed independently.

Please see Application Note #830 (Lutron P/N 048830) at www.lutron.com for more examples.

Lumaris Tape Light Solutions

Dimensions

All dimensions shown as: in (mm)

Lumaris Tunable White Wireless Controller (HWL-TWCL-WH or RRL-TWCL-WH)

Top View

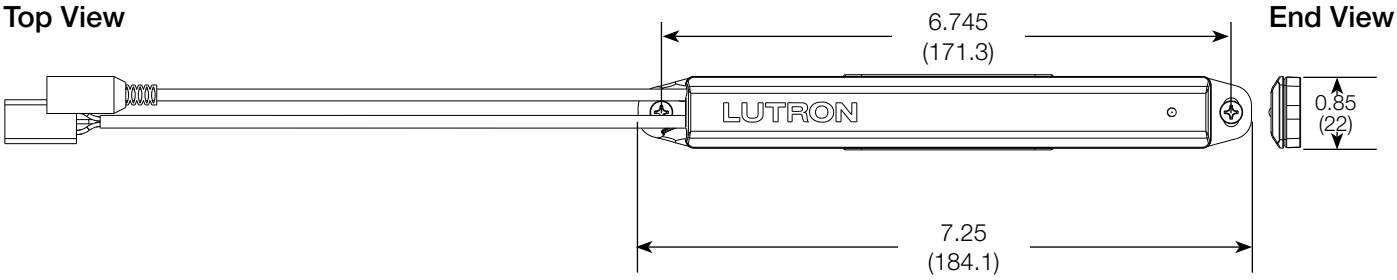

End View

Side View

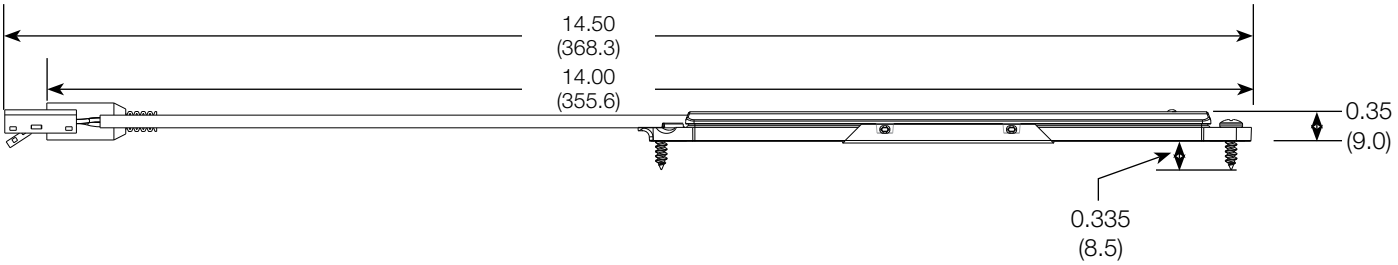

Multi-channel Wireless Controller (HWL-MWCL-WH, RRL-MWCL-WH)

Top View

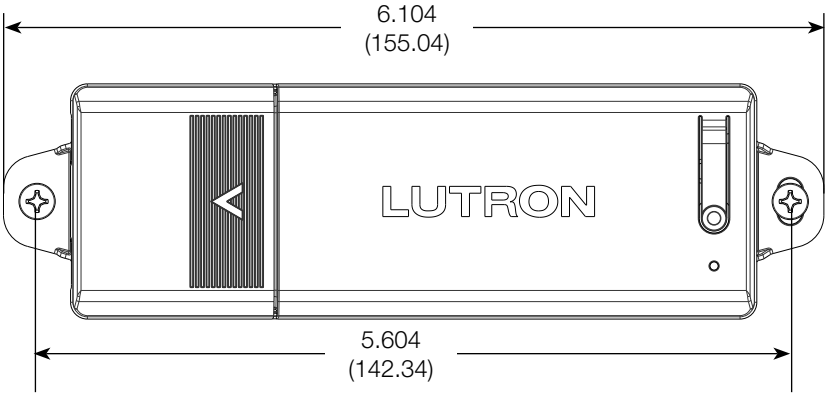

End View

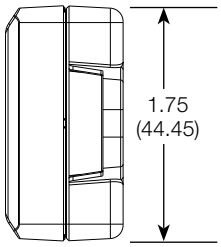

Side View

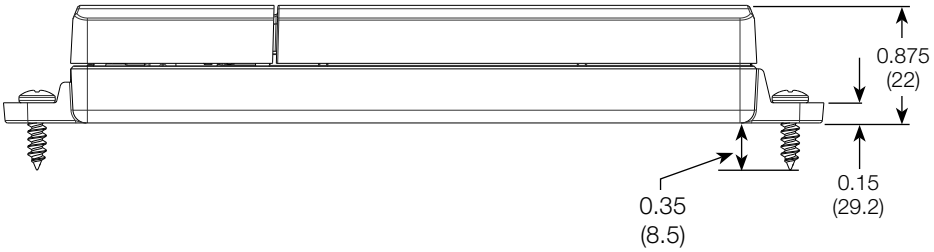

Note: The location of the wireless controller must be considered when laying out the Clear Connect - Type X network. For myLutron users, please see Application Note #745 (P/N 048745) at www.lutron.com for additional information on Clear Connect - Type X Best Practices.

Note: Do not mount wireless controllers in or on metal enclosures or cabinets.

Lumaris Tape Light Solutions

Dimensions *(continued)*

All dimensions shown as: in (mm)

3-pin Wire-to-Tape Connector (LU-CK1-TW)

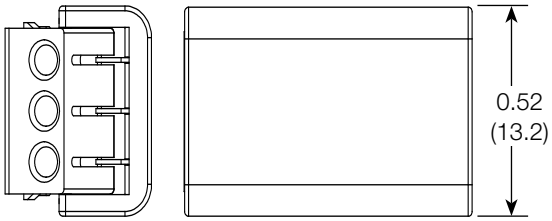

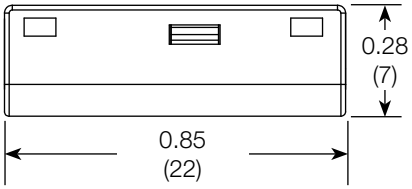

6-pin Wire-to-Tape Connector (LU-CK1-6W)

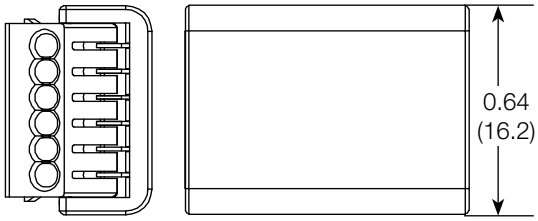

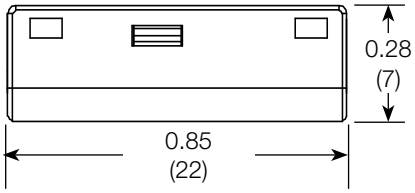

Surface Mounting Clip (LU-MK1)

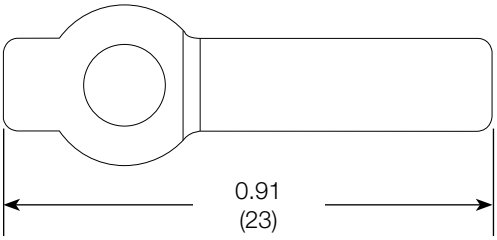

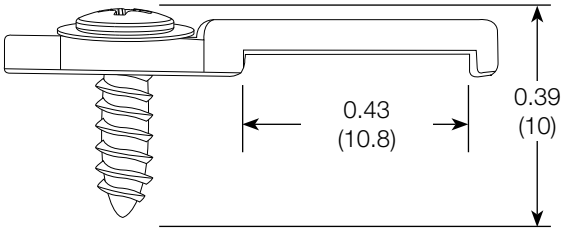

Lumaris Tape Light Solutions

Dimensions *(continued)*

All dimensions shown as: in (mm)

Plug-in Power Supply (T120-24DC-15)

Top View

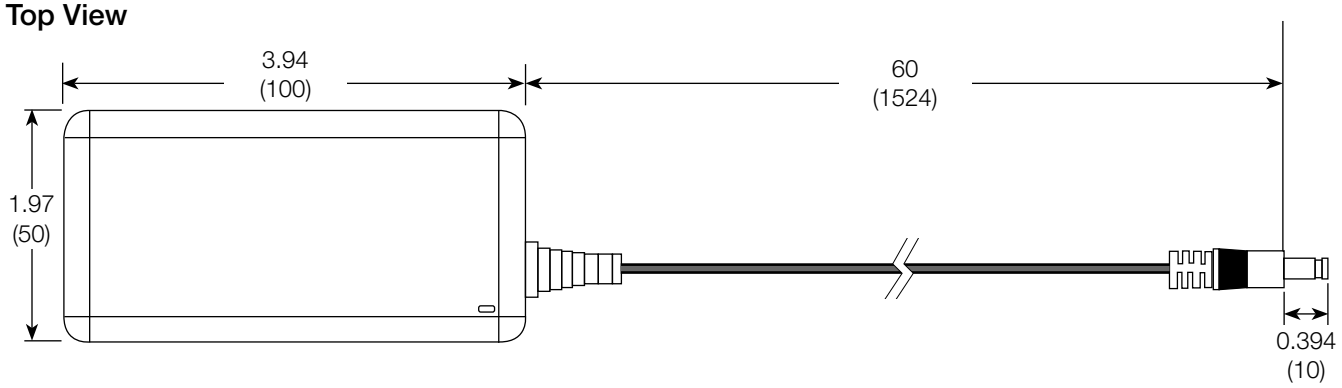

Side View

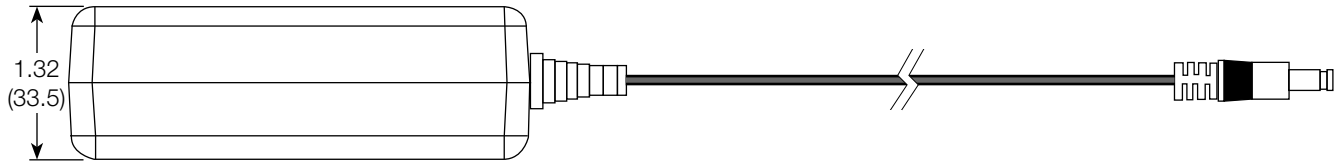

Power Cord

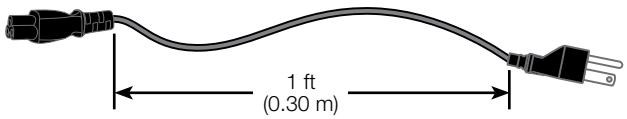

Lumaris Tape Light Solutions

Dimensions *(continued)*

All dimensions shown as: in (mm)

Power Interface Enclosure (LU-PH3-A)

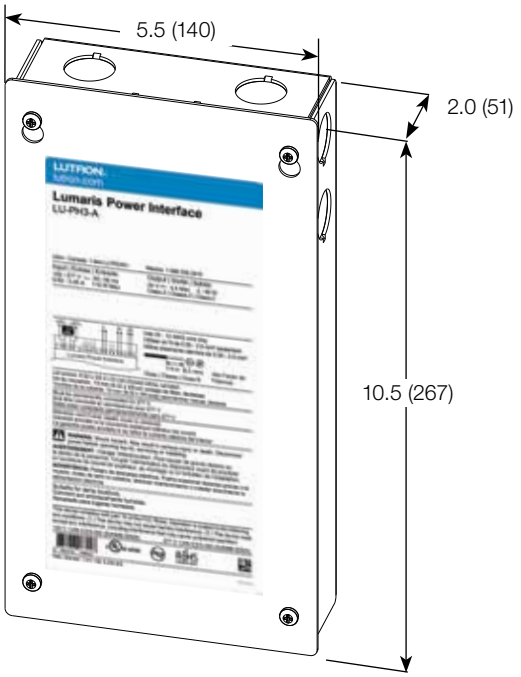

Knockouts

- Sides
  – 4 locations: 1/2 in or 21 mm trade size
- Top
  – 2 locations: 1/2 in or 21 mm trade size

Power Interface Enclosure (LU-PH3-B)

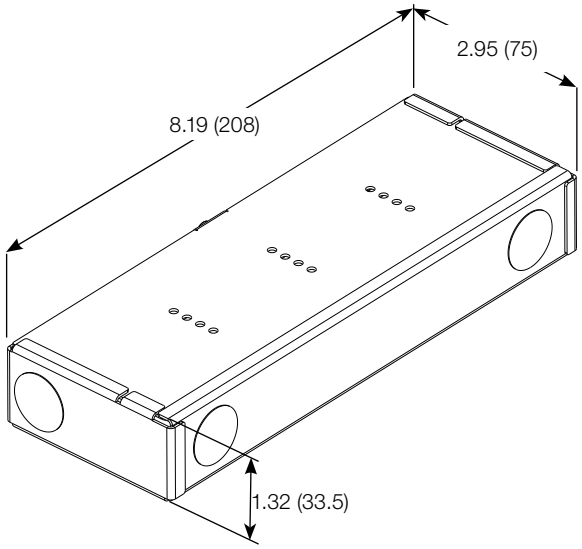

Knockouts

- Sides
  – 6 locations: 1/2 in or 21 mm trade size
- Bottom
  – 2 locations: 1/2 in or 21 mm trade size

Lumaris Tape Light Solutions

Mounting Options - Power Interface Enclosure (LU-PH3-A)[1,2]

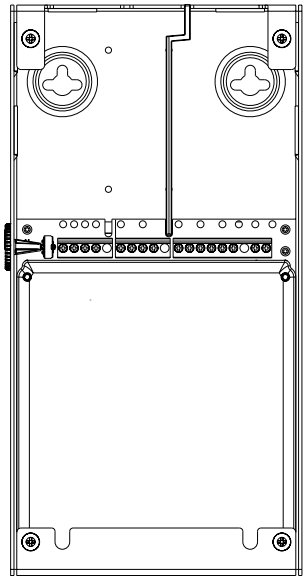

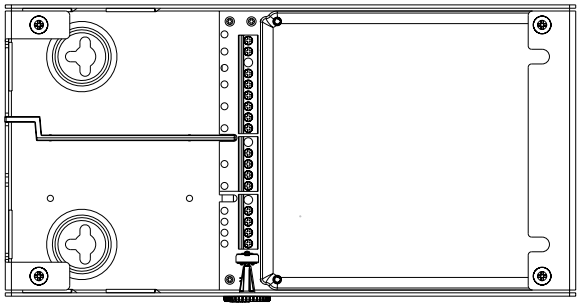

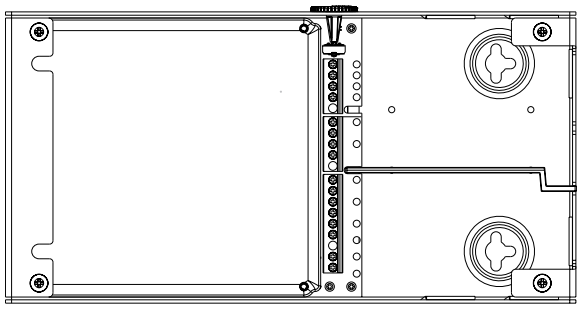

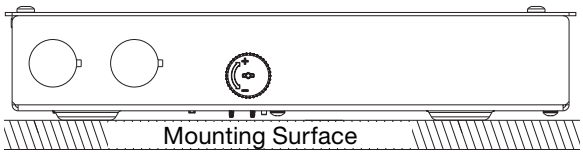

Note: The gray knob on the side of the enclosure is not used and does not need to be accessed after installation. This knob has no affect on the operation of the power interface.

1 Any other mounting configuration will require additional mechanical support. Improper installation may result in hazards to personnel or property.

2 Mount the power interface in a position where it can be easily located and accessed if service or troubleshooting is necessary.

Lutron, Clear Connect, HomeWorks, Lutron Connect, Lumaris, RadioRA 3, and any related trade dress and logos are trademarks or registered trademarks of Lutron Electronics Co., Inc. in the US and/or other countries.

All product names, logos, and brands are property of their respective owners.