MIGHTY MO 20 CABLE MANAGEMENT SYSTEM ASSEMBLY INSTRUCTIONS

NOTES:

1. BEFORE ASSEMBLING THE MM RACK, PLEASE INVENTORY MATERIAL CONTENTS PER SHEET 2 AND SCHEMATIC ON INSIDE HARDWARE KIT COVER.

2. INSTRUCTIONS ARE FOR 19" EQUIPMENT MOUNTING. RACK FOR 19" IS SHOWN.

3. THE MM UPRIGHTS HAVE EIA RACK UNIT NUMERALS EVERY RACK UNIT AND CAN BE ASSEMBLED WITH THE RACK UNIT #1 AT THE TOP OR AT THE BOTTOM. INSURE BOTH UPRIGHTS START THE SAME.

4. SEE SHEET 5 FOR LAYOUT OF FLOOR MOUNTING AND MULTIPLE RACK CONFIGURATIONS. SEE SHEET 6 FOR PROTECTIVE EARTH TERMINAL LOCATIONS.

5. RACK(S) MUST BE SECURED TO THE FLOOR, USE 3/4" DIAMETER HOLES PROVIDED IN THE BASE ANGLES. THE INSTALLER SHOULD PROVIDE MOUNTING HARDWARE TO SECURE RACKS TO FLOOR FOLLOWING LOCAL AND STATE CODES.

6. LOAD HEAVY EQUIPMENT AT THE BOTTOM OF THE RACK FIRST. TO MAINTAIN RACK STABILITY, LOAD 1/2 OF THE TOTAL EQUIPMENT WEIGHT IN THE BOTTOM 1/3 OF THE RACK. DO NOT EXCEED MAXIMUM LOAD CAPACITY.

TOOLS NEEDED FOR RACK ASSEMBLY:
- 5/16" AND 9/16" SOCKET TORQUE DRIVERS OR WRENCHES
- FLAT HEAD SCREWDRIVER
- CORNER SQUARE (RECOMMENDED)

ALSO INCLUDED WITH THE RACKS:
- (50) #12-24 X 5/8" EQUIPMENT MOUNTING SCREWS
- (24) 18" CABLE MANAGEMENT STRAPS
- (2) UNIVERSAL CABLE TROUGHS

PATENT NO's: 8,130,494
8,526,181

TESTED TO UL2416 WITH A WEIGHT LOAD OF 2000LBS.

RACK FOR 19" EQUIPMENT (AS SHOWN) TYPICAL ASSEMBLED VIEW

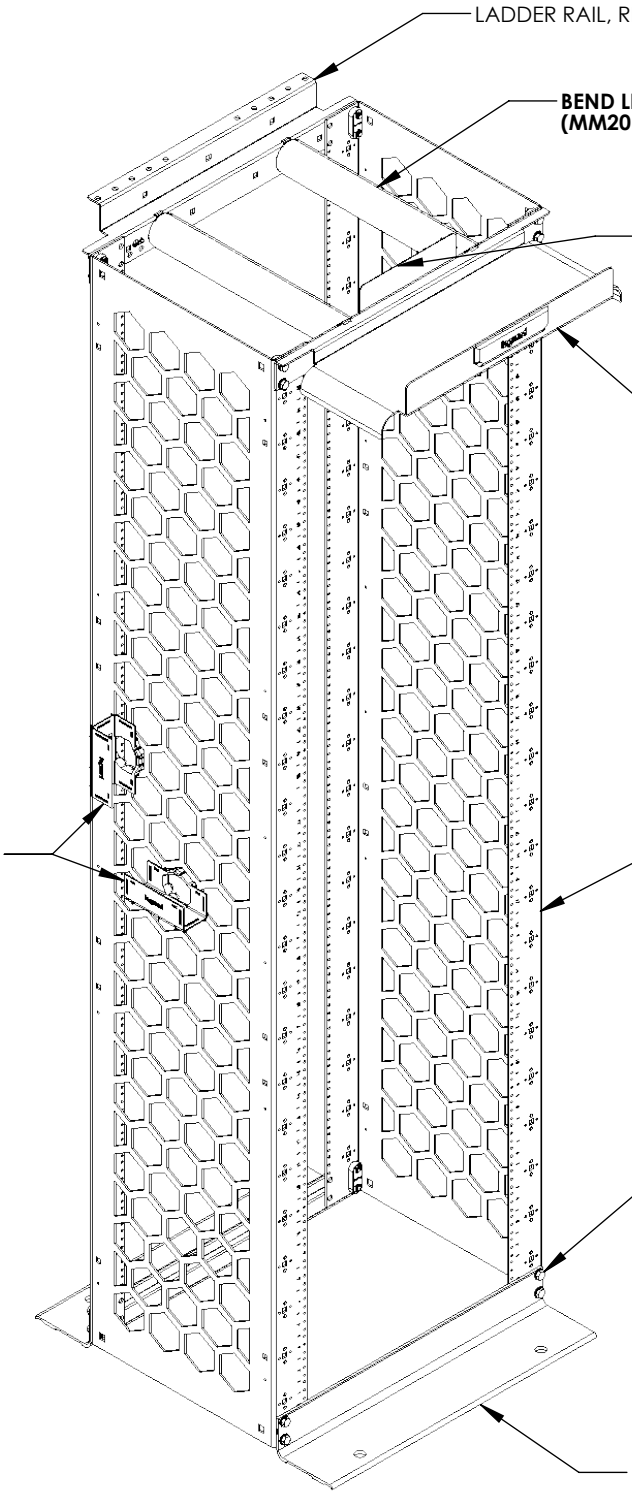

ASSEMBLY STEP 1

1. LAY THE UPRIGHTS ON THEIR SIDES PARALLEL TO EACH OTHER.
2. REMOVE ANY REMAINING PAINT DOTS.
3. ATTACH BASE ANGLE TO UPRIGHTS WITH HARDWARE SHOWN. FINGER TIGHTEN ONLY.
4. ATTACH LADDER RAIL TO UPRIGHTS WITH HARDWARE SHOWN. FINGER TIGHTEN ONLY.

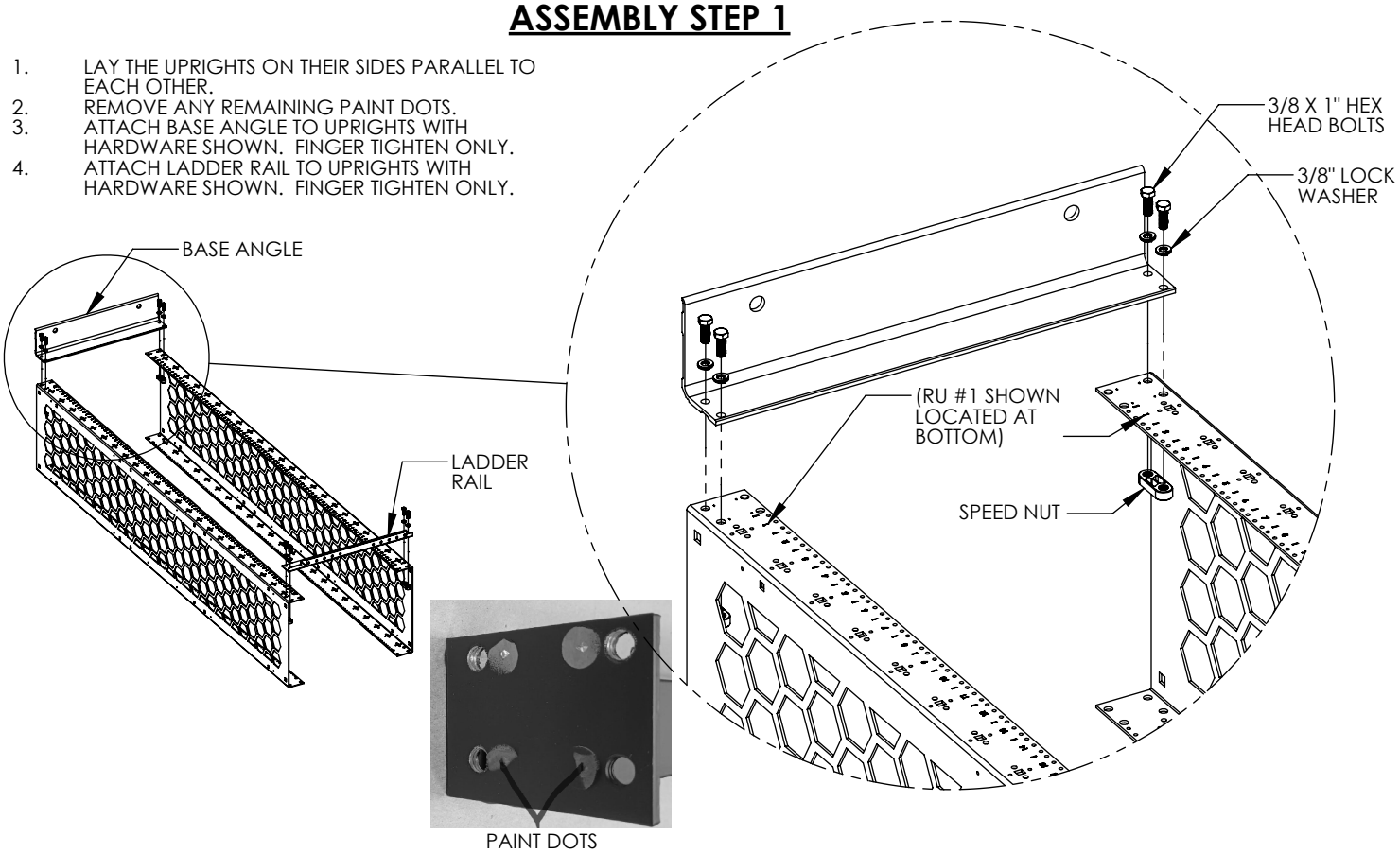

ASSEMBLY STEP 1A

1. TO SQUARE THE RACK AND TIGHTEN THE BOLTS, HOLD THE CORNER SQUARE (RECOMMENDED) TIGHTLY AS SHOWN.
2. TORQUE THE BOLTS TO 12.5 FT-LBS.
3. REPEAT STEPS 1 & 2 IN THE THREE REMAINING CORNERS.

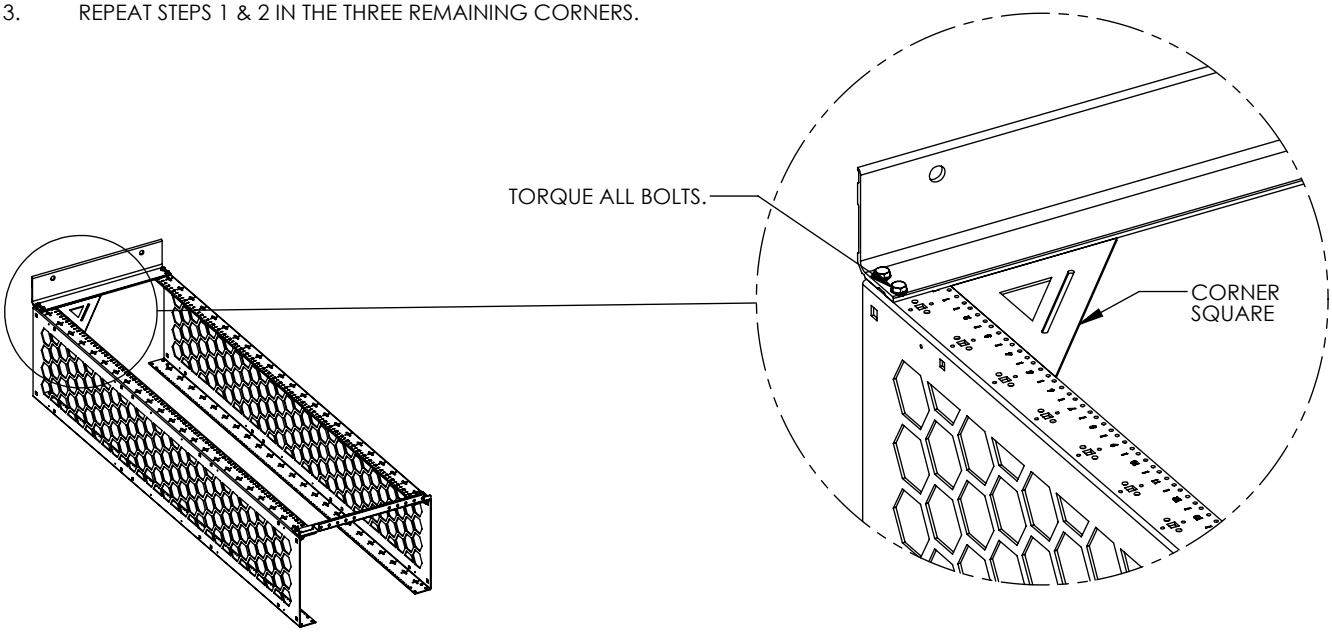

ASSEMBLY STEP 2

1. FLIP THE RACK OVER.
2. REPEAT STEPS 1 & 1A ON THE FRONT BASE ANGLE AND TOP WATERFALL.

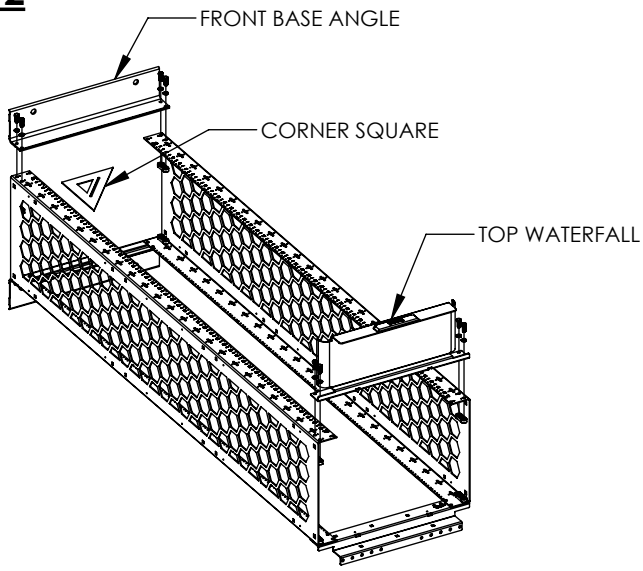

ASSEMBLY STEP 3

1. STAND RACK UP ON BASE ANGLES.
2. ATTACH SEPARATOR PLATE WITH #10-16 SCREWS.
3. SLIDE BEND LIMITERS AND BRACKETS INTO SLOTS IN WATERFALL AND LADDER RAIL. ATTACH WITH #10-16 SCREWS THRU THE OUTSIDE OF THE LADDER RAIL.

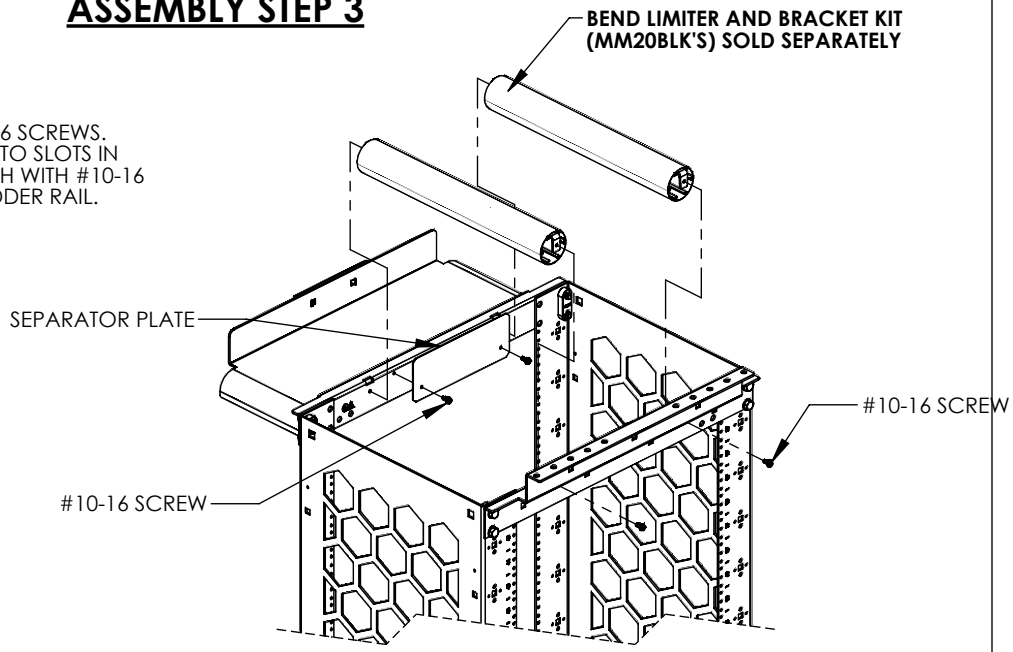

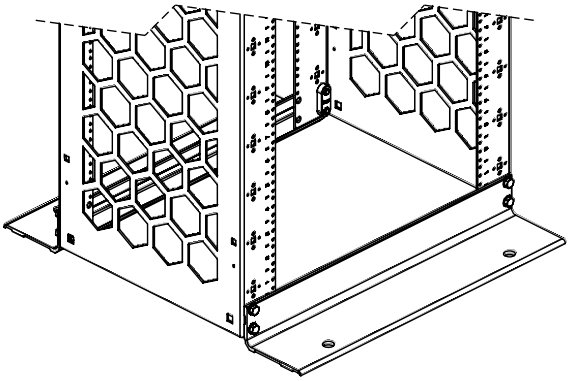

FLOOR MOUNTING OPTIONS

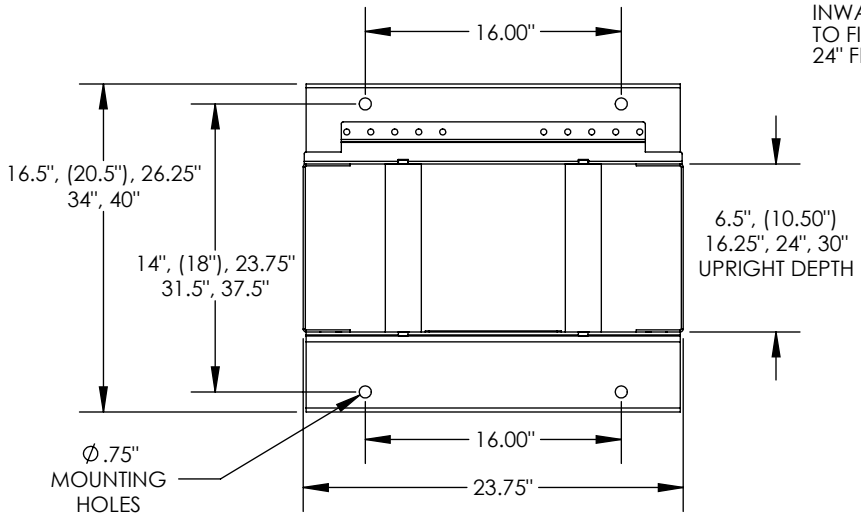

SINGLE RACK LAYOUT

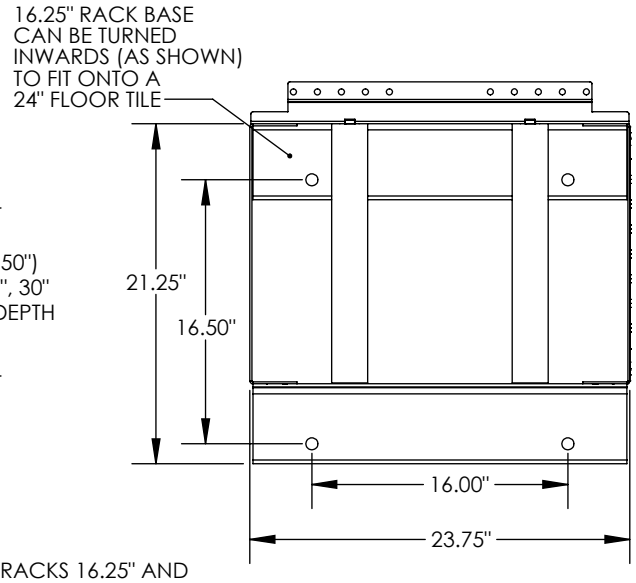

NOTE: RACKS 16.25" AND DEEPER CAN HAVE ONE OR BOTH BASE ANGLES TURNED INWARDS IF A SMALLER FOOTPRINT IS NEEDED.

BASE ANGLES TURNED INWARD

MULTIPLE RACK CONFIGURATIONS

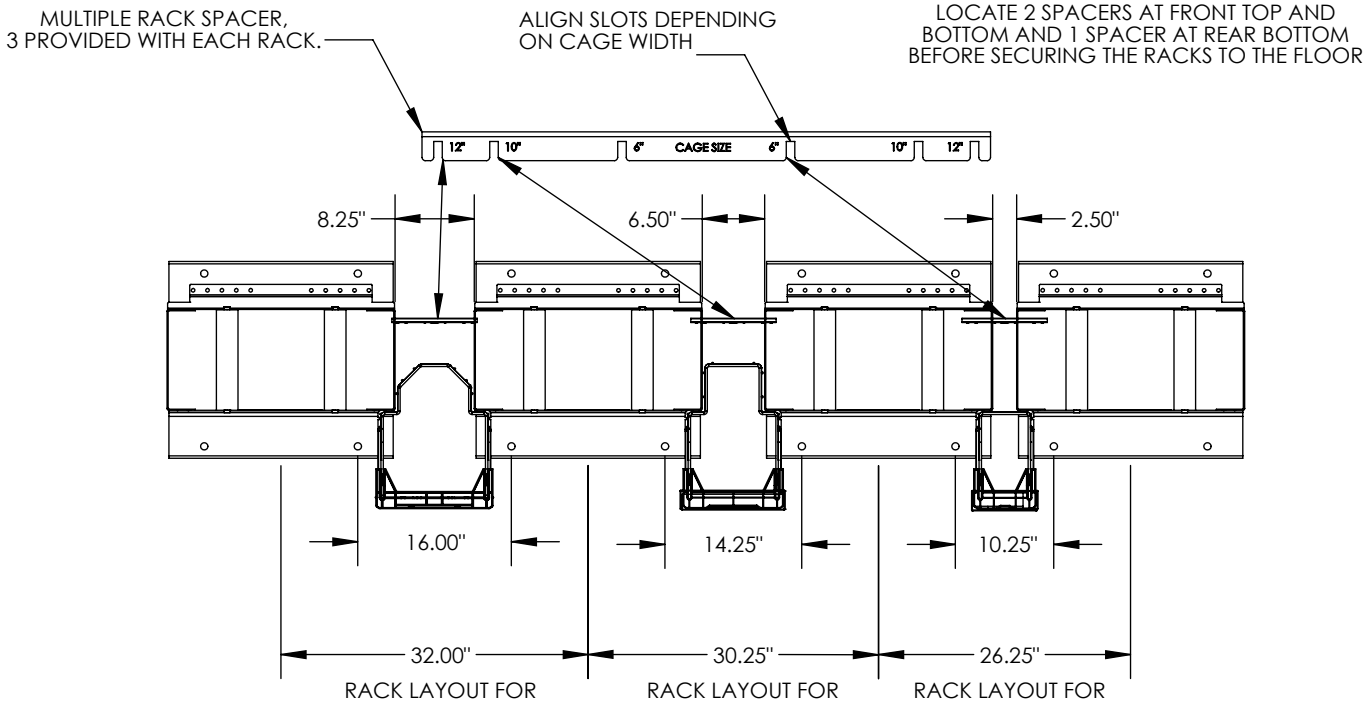

RACK LAYOUT FOR 12" CAGE

RACK LAYOUT FOR 10" CAGE

RACK LAYOUT FOR 6" CAGE

PROTECTIVE EARTH TERMINALS

PROPER INSTALLATION OF AN EQUIPMENT GROUNDING TERMINAL MUST BE MADE AND THE RACK MUST BE GROUNDED IN ACCORDANCE WITH NFPA 70, "NATIONAL ELECTRICAL CODE," AND THE APPLICABLE SECTIONS OF ANSI C2, "NATIONAL ELECTRICAL SAFETY CODE," OR EQUIVALENT.

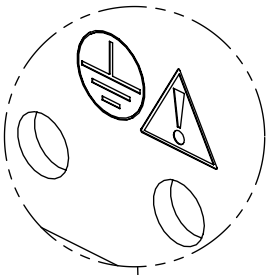

GROUND AND HELP SYMBOLS LOCATED ABOVE EVERY PROTECTIVE EARTH TERMINAL LOCATION.

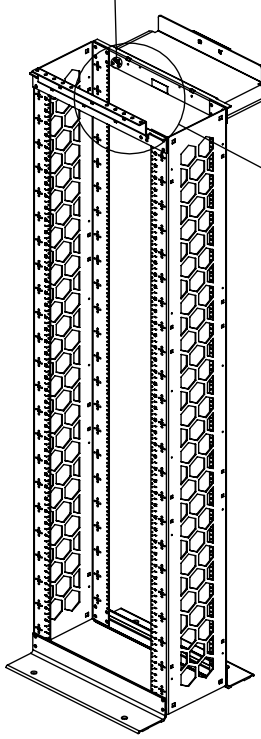

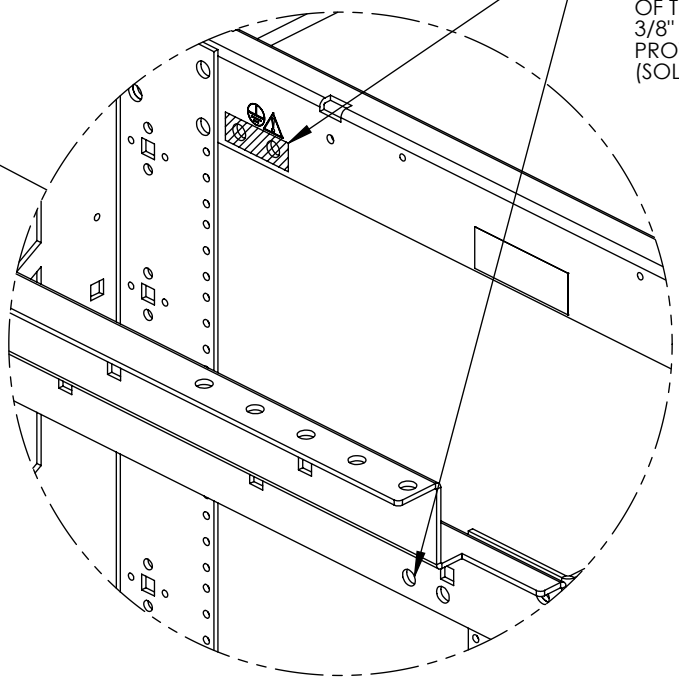

PROTECTIVE EARTH TERMINAL LOCATIONS ARE PROVIDED ON THE INSIDE OF THE RACK BY MASKED OFF AREAS ON THE BACK SIDE OF THE WATERFALL AND TOP REAR BRACKET. 3/8" DIAMETER HOLES, 1" APART ARE PROVIDED TO ATTACH GROUNDING LUGS (SOLD SEPARATELY).

LUG STYLES

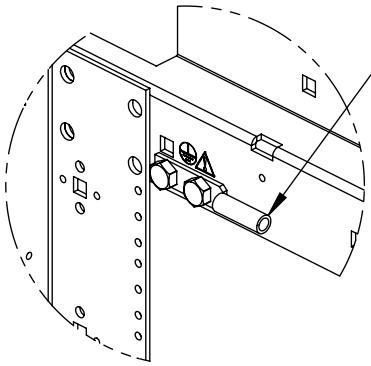

COMPRESSION STYLE LUGS THAT ACCEPT 3/8" MOUNTING HOLES AT 1" SPACING. ORTRONICS SERIES OF PART #'s: OR-CL2LB (MIN. BOLT TORQUE: 10 FT-LBS)

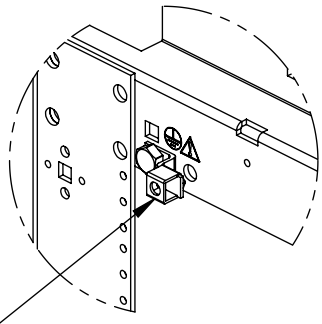

OFFSET STYLE LUGS THAT ACCEPT 1/4" MOUNTING HOLES. ORTRONICS SERIES OF PART #'s: OR-COTL28 (MIN. BOLT TORQUE: 10 FT-LBS)

BEST PRACTICES FOR WHEN INSTALLING A ROW OF RACKS AND VERTICAL MANAGERS

ASSEMBLY INSTRUCTIONS:

1. FOLLOW ALL PREVIOUS PAGES ON HOW TO ASSEMBLE THE RACKS WITH SQUARE CORNERS FRONT TO REAR.
2. VERTICAL MANAGERS **DON'T NEED TO BE INSTALLED** UNTIL AFTER THE ROW OF RACKS ARE ALL BOLTED IN PLACE.
3. RACKS SHOULD ALWAYS BE SPACED PROPERLY. SEE INSTRUCTIONS ON PAGE 8 ABOUT THE USE OF "RACK SPACER BARS".
4. TO HELP MAKE SURE THE RACK RAIL FACES ARE ALL ALIGNED, MEASURE FROM THE FRONT END OF THE BASE ANGLES TO A WALL OR ANOTHER ROW OF FIXED RACKS TO KEEP THEM EVEN.
5. **RACKS SHOULD THEN ALL BE INSTALLED ON LEVEL GROUND**, BOTH SIDE TO SIDE AND FRONT TO BACK. SEE INSTRUCTIONS ON PAGE 8 ABOUT THE USE OF "SHIMS AND WASHERS".
6. ALWAYS SHIM THE LOWER RESTING RACKS UP TO THE HIGHEST.
7. NOW THAT ALL OF THE RACKS ARE IN ALIGNMENT, PLUMB TO THE FLOOR, AND LEVEL, THEY CAN BE SECURELY BOLTED DOWN.
8. VERTICAL MANAGERS CAN NOW BE INSTALLED. FIRST, SNAP IN THE "HANGER CLIPS" AT THE TOP OF EACH RAIL TO AID IN MANAGER ASSEMBLY. NEXT, SECURE MANAGERS WITH PROVIDED SCREWS OR PLASTIC 1/4-TURN CLIPS.

BEST PRACTICES FOR WHEN INSTALLING A ROW OF RACKS AND VERTICAL MANAGERS

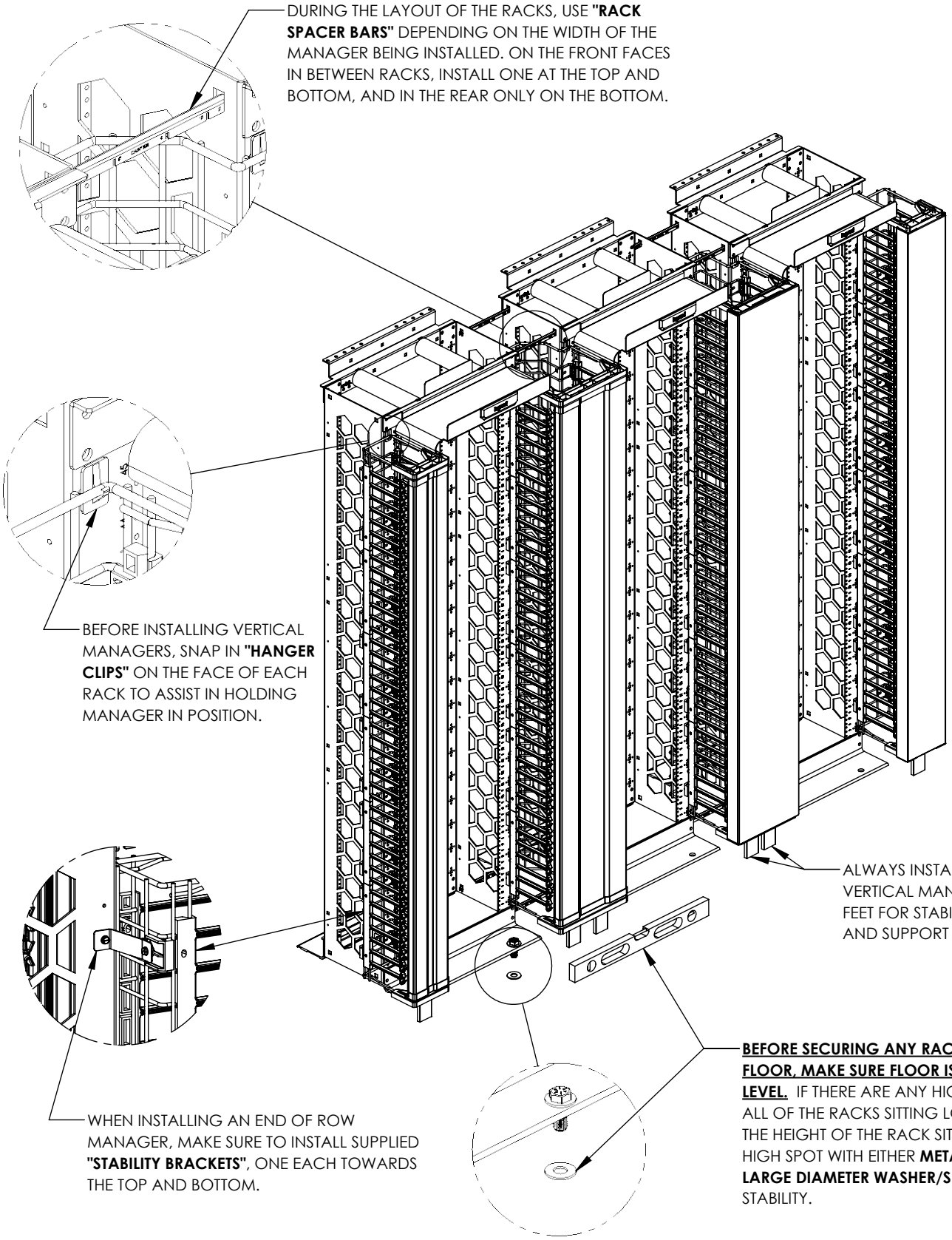

DURING THE LAYOUT OF THE RACKS, USE **"RACK SPACER BARS"** DEPENDING ON THE WIDTH OF THE MANAGER BEING INSTALLED. ON THE FRONT FACES IN BETWEEN RACKS, INSTALL ONE AT THE TOP AND BOTTOM, AND IN THE REAR ONLY ON THE BOTTOM.

BEFORE INSTALLING VERTICAL MANAGERS, SNAP IN **"HANGER CLIPS"** ON THE FACE OF EACH RACK TO ASSIST IN HOLDING MANAGER IN POSITION.

ALWAYS INSTALL VERTICAL MANAGER FEET FOR STABILITY AND SUPPORT

WHEN INSTALLING AN END OF ROW MANAGER, MAKE SURE TO INSTALL SUPPLIED **"STABILITY BRACKETS"**, ONE EACH TOWARDS THE TOP AND BOTTOM.

BEFORE SECURING ANY RACKS TO THE FLOOR, MAKE SURE FLOOR IS PERFECTLY LEVEL. IF THERE ARE ANY HIGH SPOTS, SHIM ALL OF THE RACKS SITTING LOWER UP TO THE HEIGHT OF THE RACK SITTING ON THE HIGH SPOT WITH EITHER **METAL SHIMS OR LARGE DIAMETER WASHER/S** FOR THE MOST STABILITY.