SURE WAVE™ BY CAMDEN

ROHS COMPLIANT

ADA Compliant

CM-333 Series
Hybrid Battery Powered Switches with 1 Relay

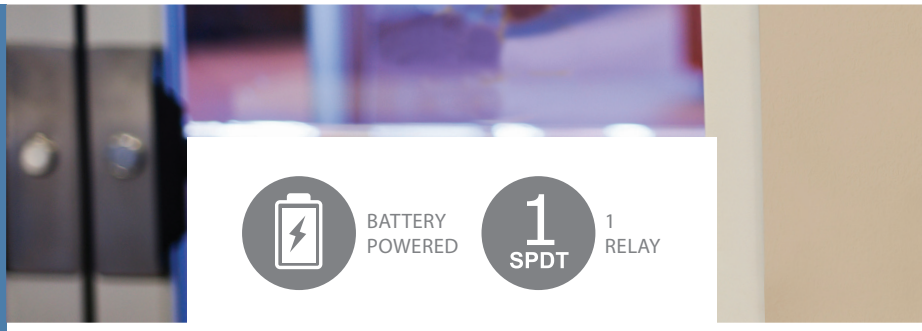

The SureWave™ family of touchless switches by Camden lead the industry in performance, quality and value - with a range of features unmatched by any other on the market.

The CM-333 hybrid battery powered touchless switch with relay provides 'state of the art' door activation while eliminating the spread of germs.

Battery powered touchless switches offer an adjustable operating range, selectable motion sensing and momentary or maintained relay operation.

CM-333 APPLICATION

Hybrid Battery Powered

Designed to retrofit non-powered push plate switches with sensor switches without any additional wiring.

These switches offer the longest alkaline battery life of any switch in the market, with the option for lithium batteries.

SPECIFICATIONS

NO. OF IR SENSORS:	1
BATTERIES:	(2) 'AA' ALKALINE (SUPPLIED) (2) 'AA' LITHIUM BATTERIES (OPTIONAL)
ESTIMATED BATTERY LIFE:	2 YEARS (BASED ON 100 OPERATIONS/DAY)
STANDARD OPERATING RANGE:	1"- 12" (25.4MM - 304MM)
MOTION SENSING MODES:	MOMENTARY, MOMENTARY WITH ALARM MAINTAINED (LATCHING)
RELAY OUTPUT:	(1) FORM 'C' (SPDT)
RELAY CONTACT RATING:	3 AMPS @ 30 VDC
OUTPUT TYPE:	FAIL SAFE / NON-FAIL SAFE OPERATION
INPUT:	REQUEST TO EXIT OR EXTERNAL (DOOR CONTACT)

MODELS

CM-333	Hybrid Battery Powered Touchless Switch with 1 Relay

OPTIONAL FACEPLATE MATERIAL (Supplied Black Polycarbonate Standard)

S	Stainless Steel Faceplate

OPTIONAL BATTERIES (2) 'AA' ALKALINE SUPPLIED

-L1	Add suffix '-L1' for (2) 'AA' Lithium Batteries in place of (2) Alkaline
CM-LP1	(2) 'AA' Lithium Battery Pack

FACEPLATE SIZES (Supplied Single Gang Standard)

Single Gang
Compatible surface mount box CM-34BL

/N - Narrow
Battery operated CM-333 is designed for mounting on door jamb

/W - Double Gang
Compatible surface mounting box CM-43CBLA

/R - 6" Round
Stainless steel only.
Indoor use only.
Compatible surface box CM-69SER

SWITCH DIMENSIONS

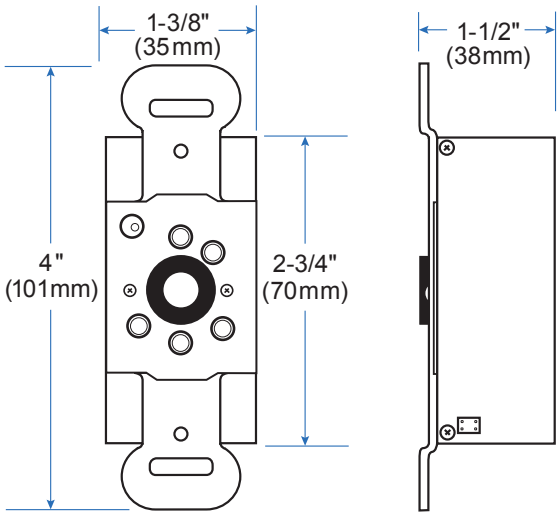

FRONT VIEW SIDE VIEW

OPTIONAL FACEPLATE GRAPHICS
(Supplied Blank Standard)

/40 */41* */42* */43* */44*

Add 'F' to graphic option for French language

For a complete list of all SureWave™ Touchless Switch Kits, please visit www.camdencontrols.com

CAMDEN DOOR CONTROLS
Opening New Doors to
Innovation, Quality and Support!

5502 Timberlea Blvd. Mississauga, ON Canada L4W 2T7 • Toll Free: 1 877 226-3369 (CAMDEN9)
Tel: (905) 366-3377 • Fax: (905) 366-3378 • E-mail: info@camdencontrols.com • www.camdencontrols.com

Certified ISO 9001: 2015
FS 541752
Part #: MKTG-LIT-SP-CM-333R4