TX3 Series

TX3-T10 Series

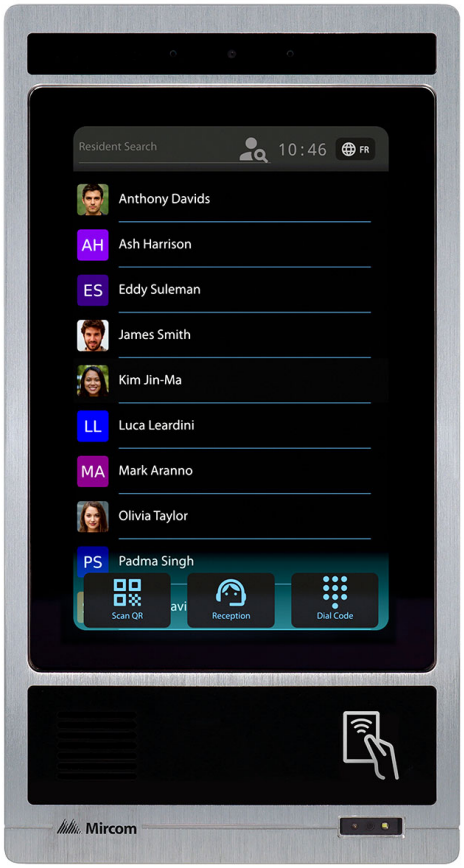

Installation Manual

Copyright December 2025 Mircom Inc.
All rights reserved.

TX3-T10 Series Installation Manual Version 1

Microsoft, MS-DOS, Windows, and Windows 2000/NT/XP/Vista/7/8/10 are either registered trademarks or trademarks of Microsoft Corporation in the United States and/or other countries.

Mircom
25 Interchange Way
Vaughan, Ontario
L4K 5W3
905.660.4655
Fax:905.660.4113

U.S.A
4575 Witmer Industrial Estates
Niagara Falls, NY 14305
Tel: (905) 660-4655
(888) 660-4655
Fax: (905) 660-4113

Contents

1 Introduction 5

1.1 TX3-T10 Series Features 5
1.2 Maximum and Minimum Mounting Heights to Comply with the ADA (Americans with Disabilities Act) 6
1.3 TX3-T10 Series Products 6
1.4 Additional Documentation 7

2 Mounting 8

2.1 Contents of the Kit 8
2.2 TX3-T10 Dimensions 8
2.3 TX3-T10 Components 9
2.4 TX3-T10BB Flush and Surface Backbox 10
2.5 Surface Installation 11
2.6 Flush Installation 13
2.7 Placement of Ferrites for FCC Standard 16
2.8 Grounding 18

3 Wiring 19

3.1 TX3-T10 Terminals 19
3.2 Inputs 20
3.3 Input Supervision 20
3.4 Outputs 22
3.5 Telephone Line 23
3.6 Power 23
3.7 External Card Reader 26
3.8 Connecting a Postal Lock 27

4 Specifications 28

5 Warranty and Warning Information 30

6 Special Notices 35

Figures

Figure 1. TX3-T10 dimensions 8
Figure 2. TX3-T10 components 9
Figure 3. TX3-T10BB dimensions 10
Figure 4. Attach a 4x4” inch electrical box to TX3-T10BB 12
Figure 5. Surface unit installation 12
Figure 6. Attach a 4x4” inch electrical box to TX3-T10BB 14
Figure 7. Flush unit installation 14
Figure 8. Flush wall cutout (side view) 15
Figure 9. Example of flush mounting TX3-T10BB to a wall stud and horizontal support 15
Figure 10. Ferrite installed on network cable 16
Figure 11. Ferrite installed on power cable 16
Figure 12. Ferrites installed on the power cable and Ethernet cable in a 4x4” electrical box with a depth of at least 2.7” 17
Figure 13. Grounding 18
Figure 14. Back of the TX3-T10 19
Figure 15. Input terminal sample connections 20
Figure 16. Input - supervised for open 21
Figure 17. Input - supervised for short 21
Figure 18. Input - supervised for open and short 22
Figure 19. Sample maglock connection 22
Figure 20. Sample door strike connection 23
Figure 21. TX3-PS24-5AF connection with shield 24
Figure 22. TX3-PS24-5AF connection without shield 25
Figure 23. Card reader connections for the TX3-P300-HA and TX3-P500-HA readers 26

1 Introduction

Mircom's TX3-T10 Series is an audio and video entry panel providing multiple options to communicate with the resident or concierge in a multi-unit dwelling establishment.

This manual provides information about the installation of the TX3-T10 Series, and must be read in its entirety before beginning any installation work.

Installation must follow best practices, must be performed by a qualified technician, and must adhere to the standards and special notices set by the local regulatory bodies.

Note: **Mircom periodically updates panel firmware and Configurator Software to add features and correct any minor inconsistencies. For information about the latest firmware or software visit the Mircom website at www.mircom.com.**

For warranty and special notices information see the Warranty and Special Notices chapters starting on page 30.

This chapter explains

- TX3-T10 Series Features

1.1 TX3-T10 Series Features

The TX3-T10 Series has two options: Flush mount and Surface mount.

Features of the TX3-T10 Series include:

- Provision for both flush and surface mounting
- Speaker and microphone for clear, hands-free two-way audio communication to the resident's phone
- Touch display for scrolling directory to select residents
- Ability to make calls over traditional PSTN (Public Switched Telephone Network) line
- Ability to make one-way video calls over VoIP to the MiEntry application on the resident's cell phone
- Built-in proximity card reader and connection for external card reader for control of two doors

- 10.1" automotive grade screen with 4mm thick front glass
- 1000 nits of high brightness for easy outdoor viewing
- 17 11/16” (196 mm) x 14 1/2” (368 mm) x 2 3/16” (56 mm)
- Brushed aluminum front face
- Weather-resistant enclosure
- QR code scanner for quick dial and temporary access to visitors and package/food deliveries

1.2 Maximum and Minimum Mounting Heights to Comply with the ADA (Americans with Disabilities Act)

From the 2010 ADA Standards for Accessible Design:

> **308.2.1 Unobstructed.** Where a forward reach is unobstructed, the high forward reach shall be 48 inches (1220 mm) maximum and the low forward reach shall be 15 inches (380 mm) minimum above the finish floor or ground.

To comply with section 308.2.1 of the 2010 ADA Standards for Accessible Design, the maximum and minimum mounting heights for the TX3-T10 Series are shown in the table below.

Table 1: Maximum and Minimum Mounting Heights

Model	Maximum distance from the finished floor to the lowest part of the unit	Minimum distance from the finished floor to the lowest part of the unit
TX3-T10 Series	37 3/16" (945.3 mm)	15" (380 mm)

1.3 TX3-T10 Series Products

- TX3-T10-G - Gray
- TX3-T10-S - Silver
- TX3-T10BB - Flush and surface mount backbox (included with the TX3-T10)
- TX3-PS24-5AF - TX3 power supply (sold separately)
- TX3-T10TR - Flush trim ring (sold separately)
- TX3-T10RH - Rain hood/sun cover (sold separately)
- TX3-T10PS - Pedestal (sold separately)
- TX3-PL-ENCL - Postal lock (sold separately)

1.4 Additional Documentation

For additional documentation, see the following Mircom literature:

- LT-6767 TX3-T10 Series User Manual
- LT-995 TX3 Configurator Manual
- LT-6783 TX3-T10TR Installation Instructions
- LT-6791 TX3-T10RH Installation Instructions
- LT-6792 TX3-T10PS installation Instructions

2 Mounting

2.1 Contents of the Kit

- TX3-T10-S or TX3-T10-G
- 4 x security screws
- 4 x washers for surface installation of TX3-T10BB
- Screwdriver
- TX3-T10BB mounting box
- Nut for securing TX3-T10 ground wire to the inside of TX3-T10BB
- 2 x ferrites and key
- Optional Ethernet patch cable
- USB flash drive with manuals

2.2 TX3-T10 Dimensions

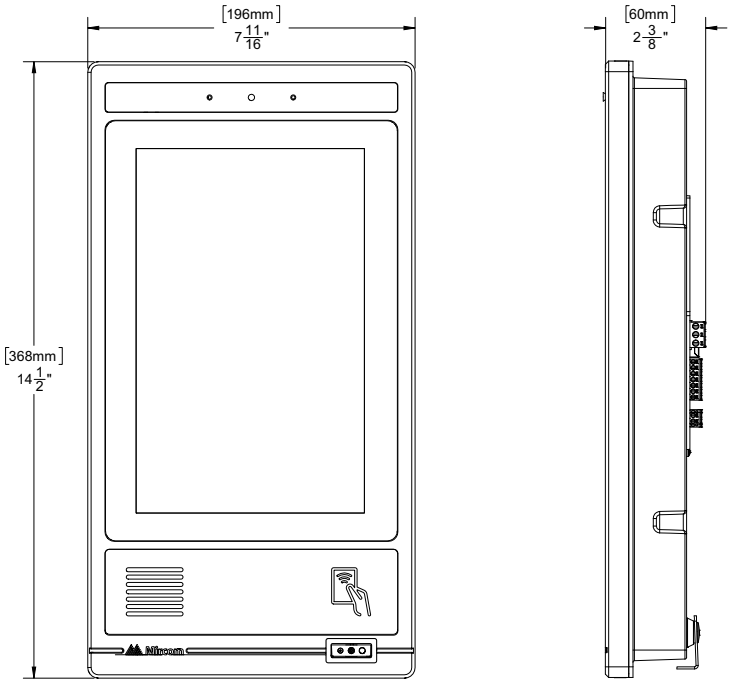

Figure 1. TX3-T10 dimensions

2.3 TX3-T10 Components

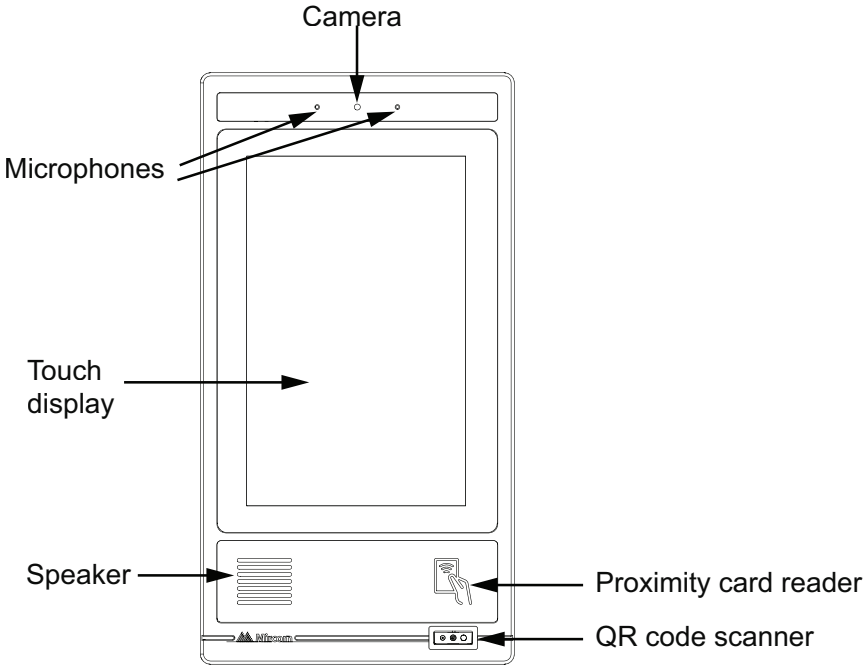

Figure 2. TX3-T10 components

2.4 TX3-T10BB Flush and Surface Backbox

Warning: The TX3-T10BB backbox is required for all installations. Failure to install TX3-T10BB will void the warranty.

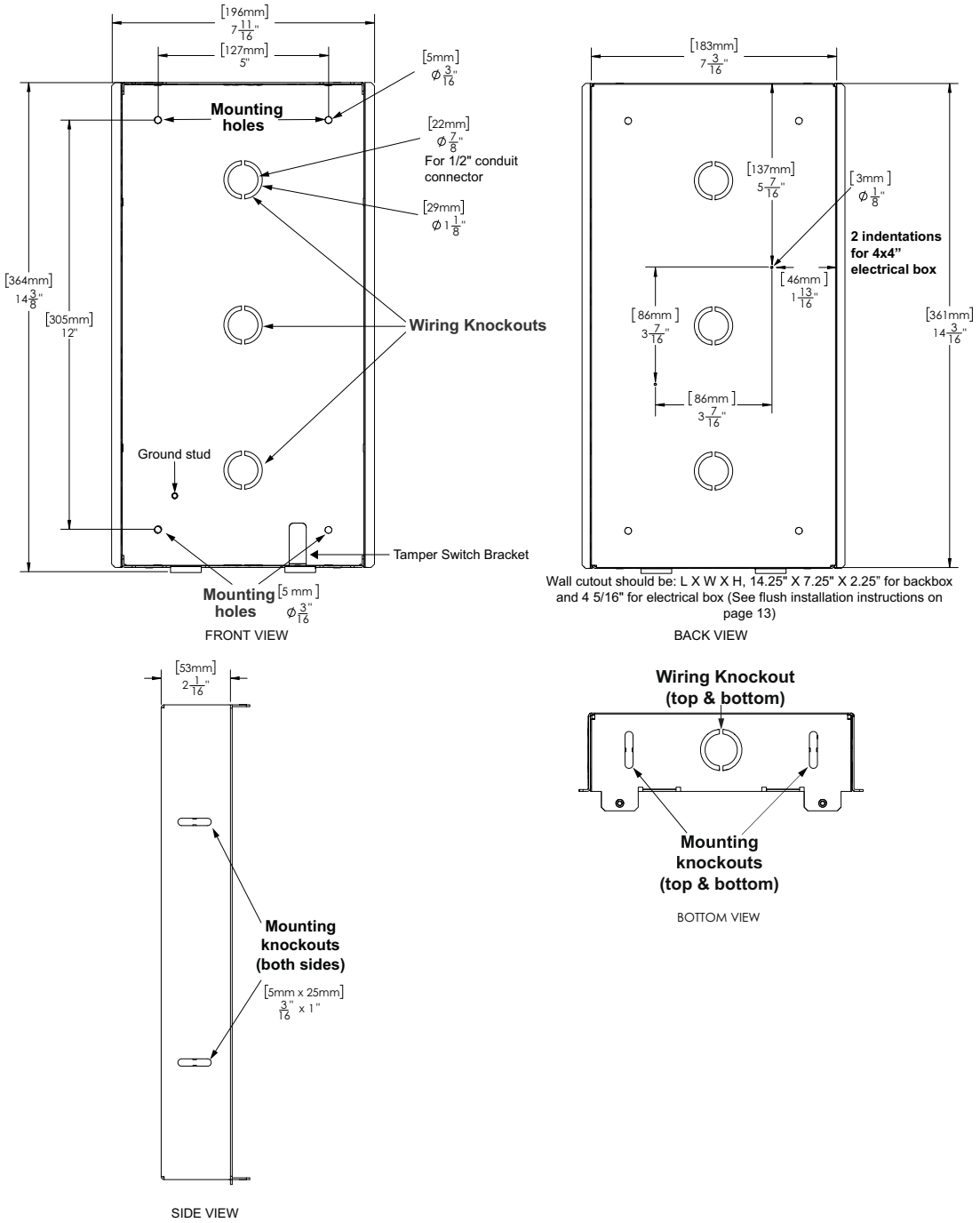

Figure 3. TX3-T10BB dimensions

2.5 Surface Installation

Note: If you are using an accessory such as TX3-T10TR, TX3-T10RH or TX3-T10PS, follow the instructions that came with the accessory.

Install TX3-T10BB with the tamper switch bracket at the bottom.

1. Cut an opening in the wall for a 4x4" electrical box. The electrical box must have a depth of at least 2.27”.
2. Route the wiring through the knockout and into the electrical box.
3. Install the ferrites on the network cable and the power cable as shown in section 2.7. Place the ferrites in the electrical box.
4. Attach the electrical box to the TX3-T10BB backbox. Mount it over one of the three knockouts on the back, or over the knockout on the bottom (figure 4).

   If you use the centre knockout on the back, use the two indentations shown in figure 3 as guides for the electrical box.
5. Connect the ground wires as described in section 2.8.
6. Attach the TX3-T10BB backbox to the wall using the four provided washers and four fasteners appropriate to the wall. The mounting holes are 3/16” (5 mm) in diameter. The holes are shown in figure 3.

Note: **For indoor installation, the washers are optional. For outdoor installation, the washers are recommended.**

7. Mount the TX3-T10 unit inside the backbox. The backbox has 4 tabs that go into 4 slots on the back of the TX3-T10 unit (figure 5).

Note: If the metal tabs on TX3-T10BB do not fit into the TX3-T10, use pliers to adjust them.

8. Secure 4 security screws, 2 from top and 2 from bottom, with the provided screwdriver (figure 5).

   The screwdriver is reversible. Make sure that the hex side is out, as shown.

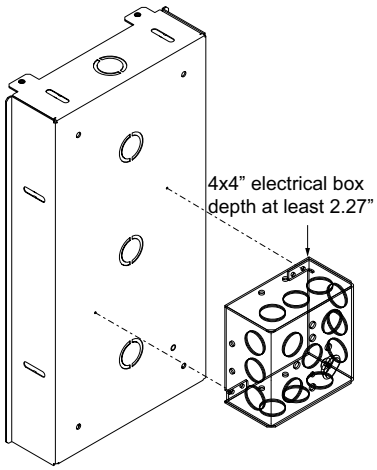

Figure 4. Attach a 4x4” inch electrical box to TX3-T10BB

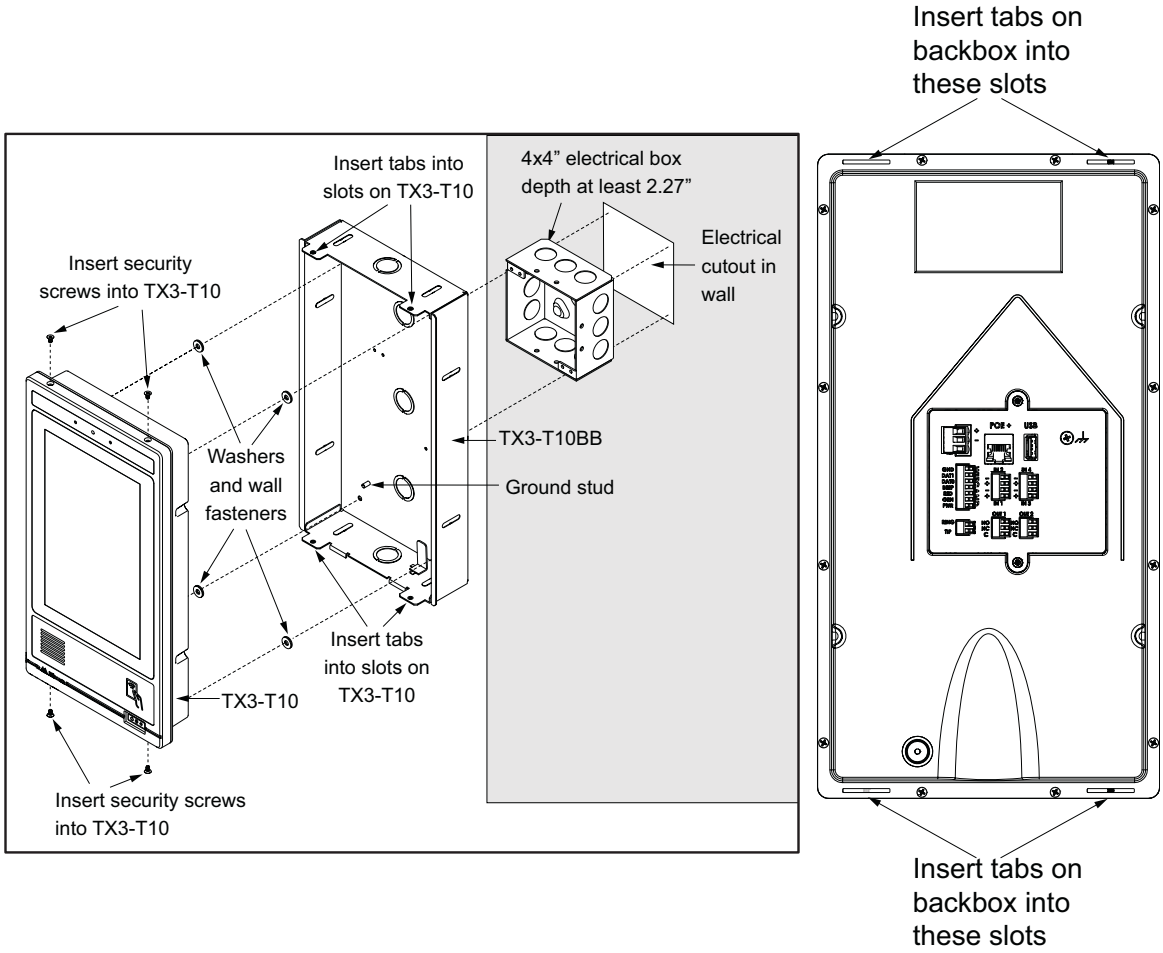

Figure 5. Surface unit installation

2.6 Flush Installation

Note: If you are using an accessory such as TX3-T10TR, TX3-T10RH or TX3-T10PS, follow the instructions that came with the accessory.

Install TX3-T10BB with the tamper switch bracket at the bottom.

1. Cut an opening in the wall for TX3-T10BB and a 4x4” electrical box. The electrical box must have a depth of at least 2.27”.

   The dimensions of the cutout should be 362 mm (14 1/4”) high by 184 mm (7 1/4”) wide by 55 mm (2 1/4”) minimum deep.

   There must be an additional cutout for the electrical box with a total depth of 109 mm (4 5/16”). See Figure 8.

   Ensure that there are supports on at least two sides for mounting TX3-T10BB.
2. Route the wiring through the knockout and into the electrical box.
3. Install the ferrites on the network cable and the power cable as shown in section 2.7. Place the ferrites in the electrical box.
4. Attach the electrical box to the TX3-T10BB backbox. Mount it over one of the three knockouts on the back, or over the knockout on the bottom (figure 6).

   If you use the centre knockout on the back, use the two indentations shown in figure 3 as guides for the electrical box.
5. Connect the ground wires as described in section 2.8.
6. Insert the TX3-T10BB backbox into the wall cutout as shown in figure 7.
7. Attach the backbox to supports on at least two sides with four fasteners appropriate to the wall.

   The mounting knockouts are 3/16” x 1” (5 mm x 25 mm) and are shown in figure 3.

   Figure 9 shows an example of mounting TX3-T10BB to a wall stud and a horizontal support.
8. Mount the TX3-T10 unit inside the backbox. The backbox has 4 tabs that go into 4 slots on the back of the TX3-T10 unit (figure 7).

Note: If the metal tabs on TX3-T10BB do not fit into the TX3-T10, use pliers to adjust them.

9. Secure 4 security screws, 2 from top and 2 from bottom, with the provided screwdriver (figure 7).

   The screwdriver is reversible. Make sure that the hex side is out, as shown.

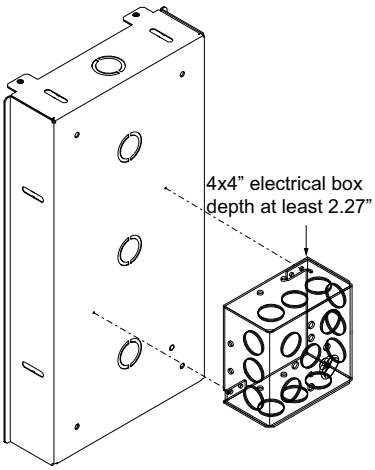

Figure 6. Attach a 4x4” inch electrical box to TX3-T10BB

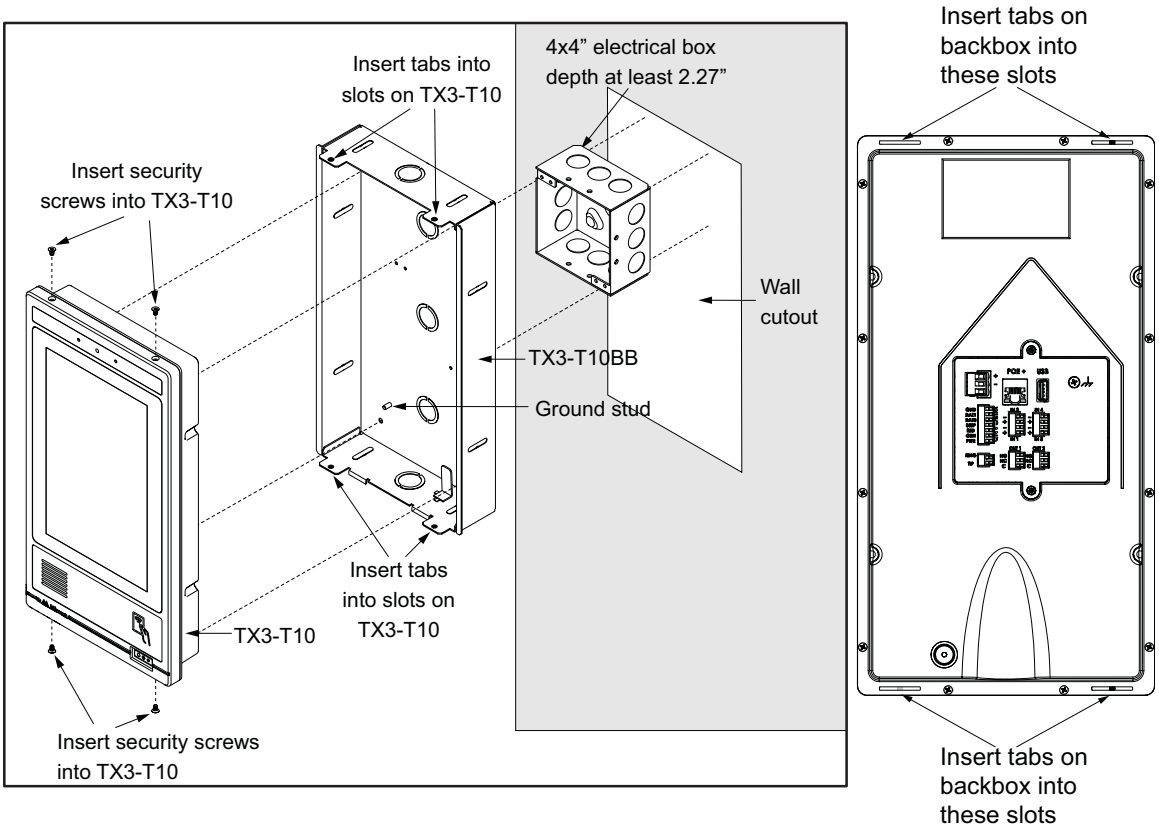

Figure 7. Flush unit installation

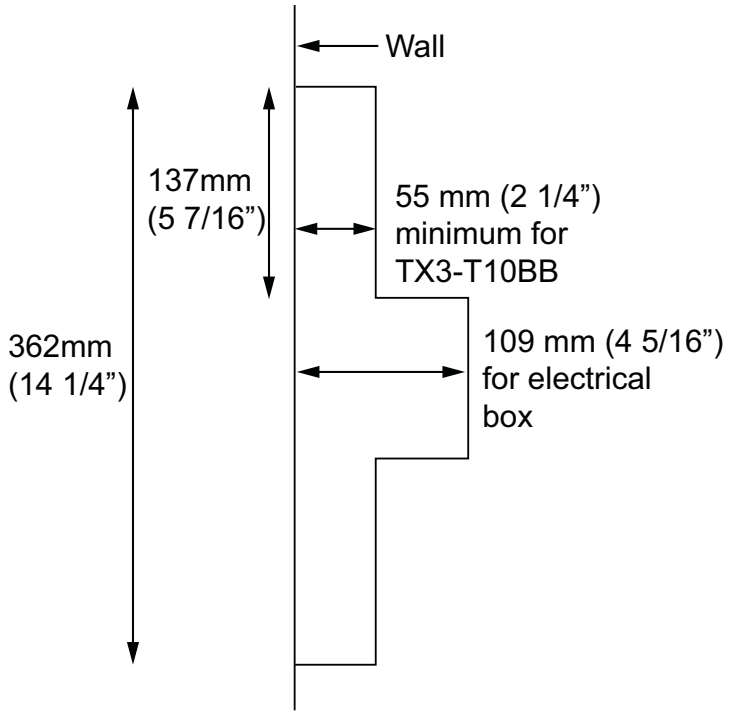

Figure 8. Flush wall cutout (side view)

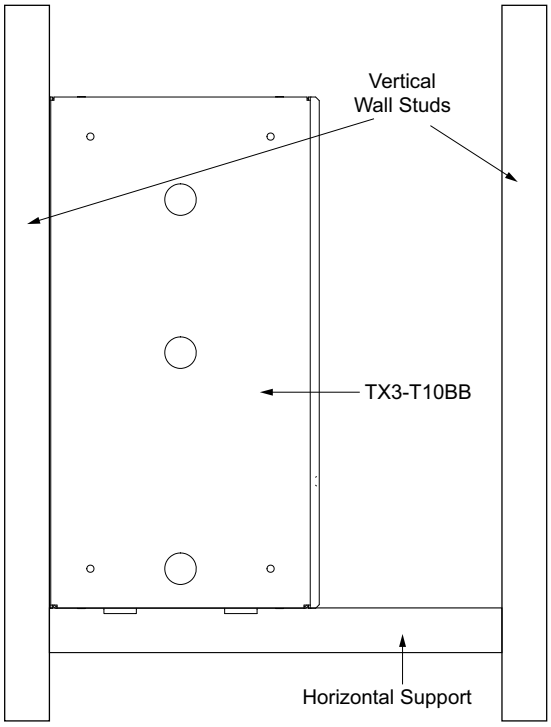

Figure 9. Example of flush mounting TX3-T10BB to a wall stud and horizontal support

2.7 Placement of Ferrites for FCC Standard

Install the two included ferrites (Mircom part number FER-001) on the network cable and the power cable. (If you are using PoE+ for power, then the power cable is not required.)

Note: Ferrites must be connected as stated for adherence of FCC rules.

Wrap the cable once around the ferrite as show in figures 10 and 11.

Place the ferrites in the electrical box. See figure 12.

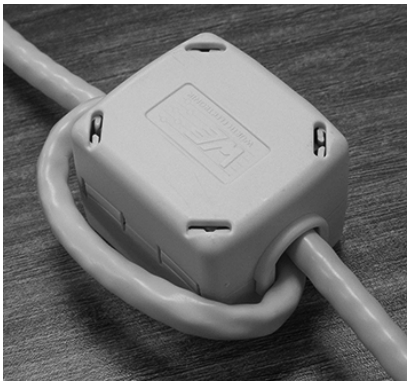

Figure 10. Ferrite installed on network cable

Figure 11. Ferrite installed on power cable

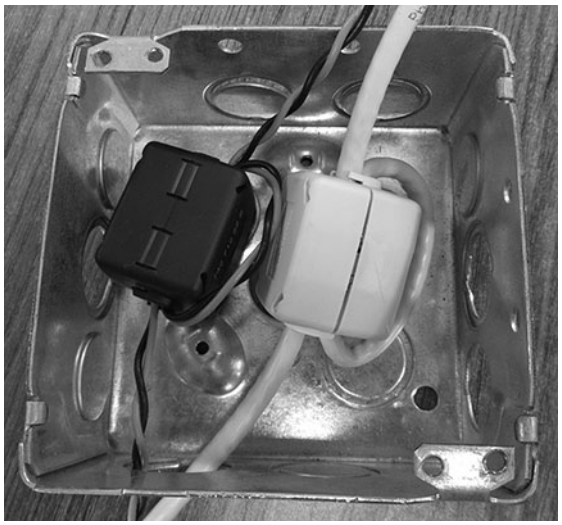

Figure 12. Ferrites installed on the power cable and Ethernet cable in a 4x4” electrical box with a depth of at least 2.7”

2.8 Grounding

Connect the ground wire from the ground screw on the back of the TX3-T10 to the ground post inside the TX3-T10BB with the included nut (figure 13).

Connect the second ground wire from the ground post inside TX3-T10BB to a solid earth ground (building system ground or a cold water pipe) as shown in figure 13.

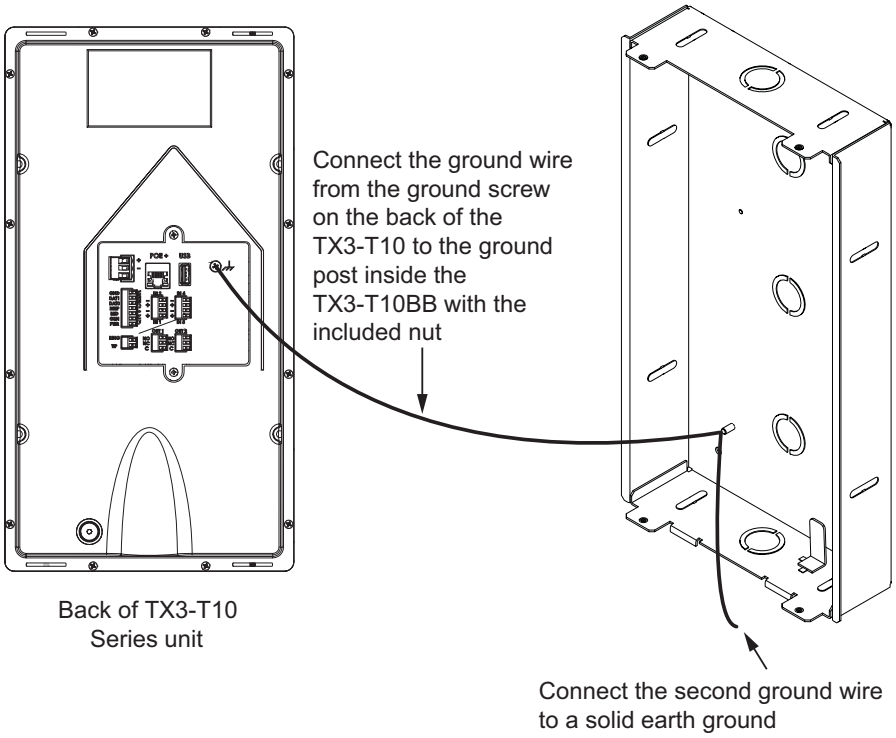

Figure 13. Grounding

3 Wiring

3.1 TX3-T10 Terminals

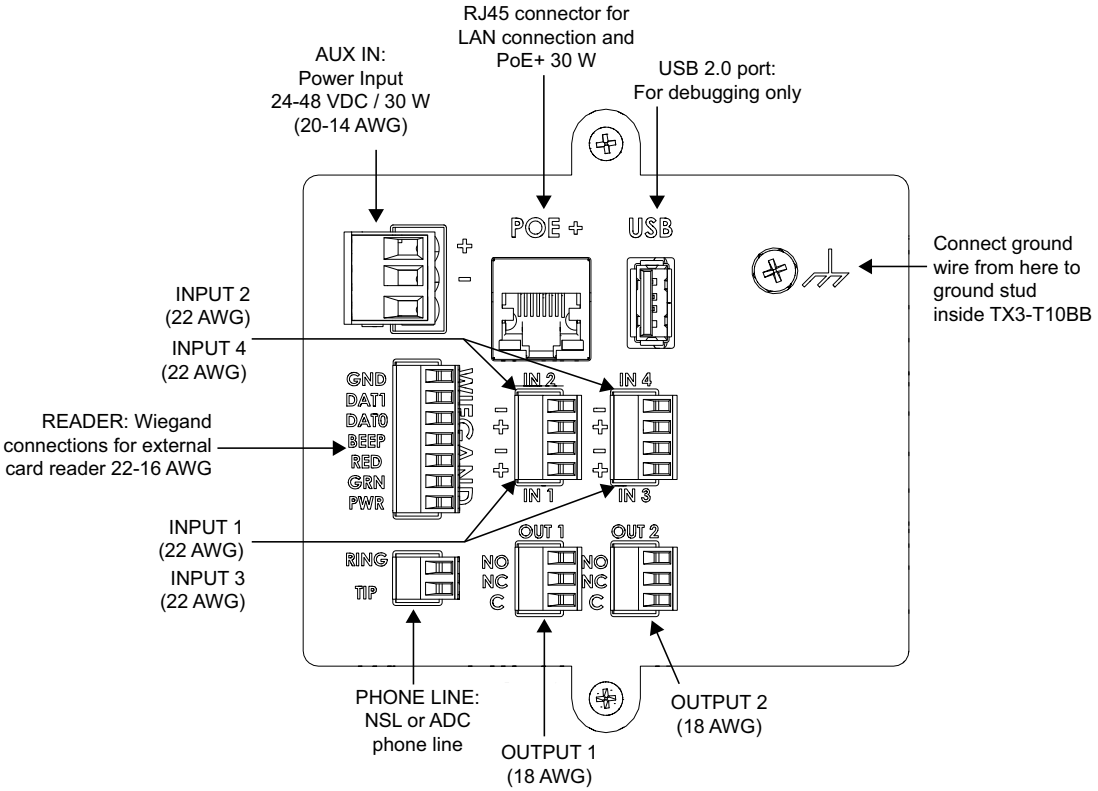

Figure 14. Back of the TX3-T10

3.1.1 Wiring Tips

- Perform visual inspection of the parts for obvious issues.
- Group the incoming wires through the hole in the mounting plate. Use a wire tie to group wires for easy identification and neatness.
- Use the optional Ethernet patch cable for the LAN connection unless your LAN cable is crimped to fit in TX3-T10BB

3.1.2 Maximum Wiring Lengths

- Inputs: 305 m (1000 ft) at 22 AWG
- PoE+: 100 m (328 ft) CAT5e or CAT6
- USB: 2.4 m (8 ft)
- Outputs: consult the documentation for the door strike or maglock
- Wiegand: 152.4 m (500 ft)

3.2 Inputs

By default, input 1 is configured as door sense for reader A. Connect input 1 to a door sense switch. When the door assigned to reader A lock or reader B lock is opened the input is active, and when the door is closed the input is inactive.

By default, input 2 is configured as door sense for reader B. Input 3 is postal lock input, and input 4 is fire panel override.

For details on programming the inputs, see LT-995 TX3 Configurator Manual.

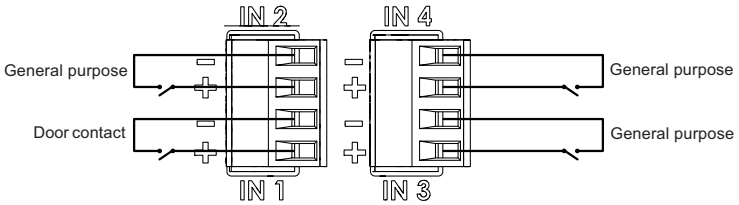

Figure 15. Input terminal sample connections

3.3 Input Supervision

The input's active state can be configured as either **Open** or **Close**. The default is **Close**.

There are some restrictions in configuring the active state depending on what kind of supervision is required.

Each input can be configured for a specific type of supervision as follows:

- No supervision
- Supervise for open
- Supervise for short
- Supervise for open and short

3.3.1 No supervision

When the input is configured for no supervision, the active state is either **Open** or **Close**. No end of line resistor is required in this case.

3.3.2 Supervised for open

When the input is supervised for open, the active state in the Configurator is **Close**. This scheme requires a single 47 kΩ end of line resistor.

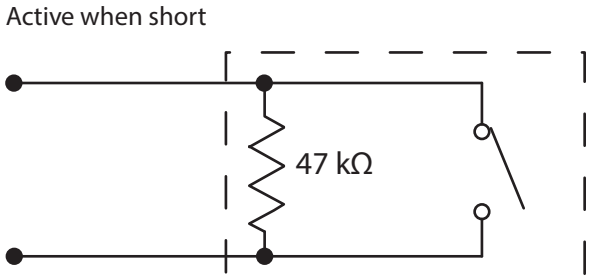

Figure 16. Input - supervised for open

Note: The switch's active state cannot be an open state.

3.3.3 Supervised for short

When supervised for short, the active state in the Configurator is **Open**. A single 47 kΩ resistor is required for short supervision as shown below.

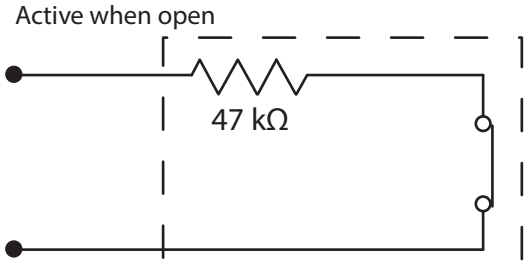

Figure 17. Input - supervised for short

Note: The switch's active state cannot be a short state.

3.3.4 Supervised for open and short

When supervised for both open and short, the active state cannot be open, therefore the active state in the Configurator is **Close**.

Two 22 kΩ resistors are required for supervision.

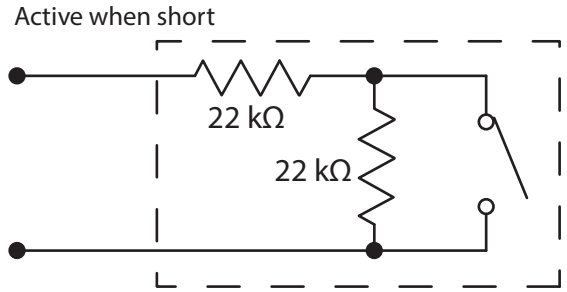

Figure 18. Input - supervised for open and short

Note: The switch's active state cannot be an open state.

3.4 Outputs

2 Form C dry contact relays with these contact ratings:

- 30 VDC/2 A or
  or
- 125 VAC/0.5 A

By default, Output 1 is configured as main door and reader A lock, and Output 2 is configured as aux door and reader B lock. Connect Output 1 to a door strike or maglock. When access is granted, the output unlocks the door.

For details on programming the outputs, see LT-995 TX3 Configurator Manual

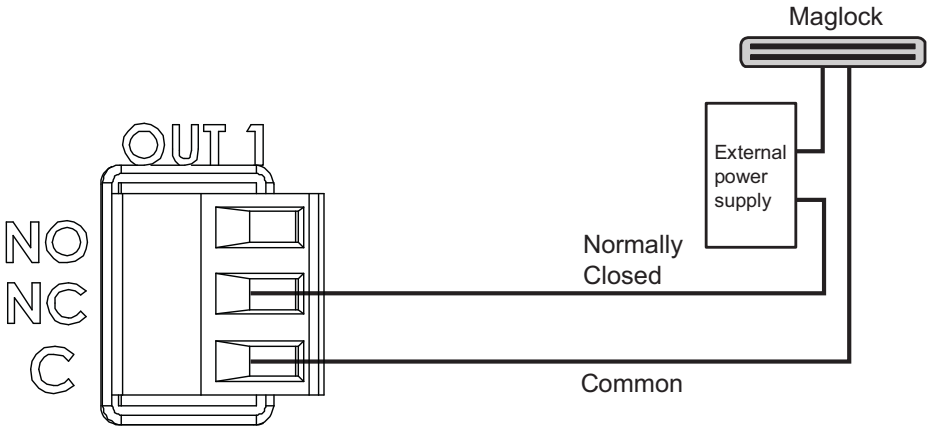

Figure 19. Sample maglock connection

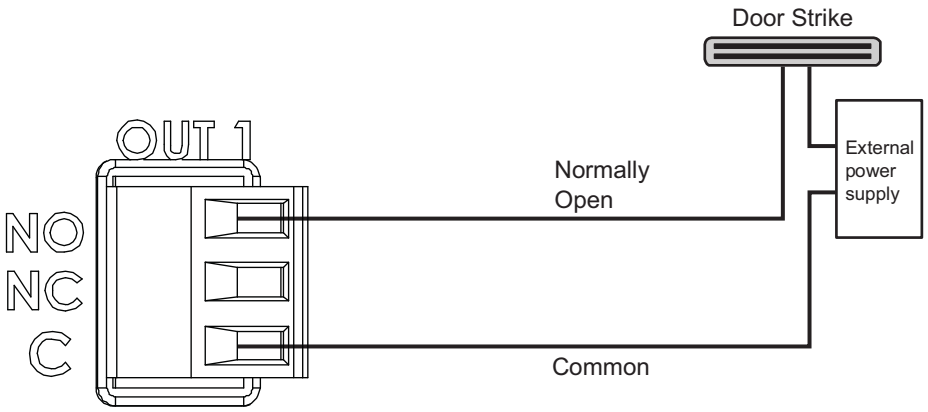

Figure 20. Sample door strike connection

3.5 Telephone Line

Either an NSL (no subscriber line) or ADC (autodialer controller) lines can be connected.

Note: Not all PBX systems are supported. For more information, contact technical support at Mircom.

Most PBX systems that support these voltages should work:

- On-hook voltage between 22 V and 60 V
- Off-hook voltage between 3 V and 9 V

The TX3-T10 has voice activity detection and call progress tone detection to determine if someone has picked up the phone or if the line is busy.

The telephone line is compatible with the TX3 NSL relay cabinet.

3.6 Power

Note: If the TX3-T10 is not using PoE+ for power, then connect a power supply such as the TX3-PS24-5AF (sold separately) to the AUX IN terminals.

If both PoE+ and the TX3-PS24-5AF are connected, the TX3-T10 will draw power from the TX3-PS24-5AF.

3.6.1 PoE+ (IEEE 802.3at)

Connect a CAT5e or CAT6 RJ45 connector to a PoE+ (Power over Ethernet) powered router, switch or injector. The RJ45 connector provides power through PoE+, and also provides a connection to the LAN. If you use a PoE+ router, switch or injector, it must provide at least 30 W and it must support the IEEE 802.3at standard.

3.6.2 AUX IN

Connect a power supply such as the TX3-PS24-5AF to the power input (labeled AUX IN).

Mircom recommends using a shielded cable.

1. Set the voltage selectable switch on the TX3-PS24-5AF power supply to the appropriate voltage. The voltage selectable switch can be set to either 115 V or 230 V.

2. Connect the load power supply wires to the TX3-T10 AUX IN terminals as shown in figure 21.

3. Connect the other end of the load power supply wires to the OUT TS2 + and − terminal screws on the small board of TX3-PS24-5AF as shown in figure 21.

4. If you are using shielded cable, connect the shield to the ground screw on the small board as shown in figure 21.

5. Connect the building power supply wires to the Line terminal screws on TX3-PS24-5AF.

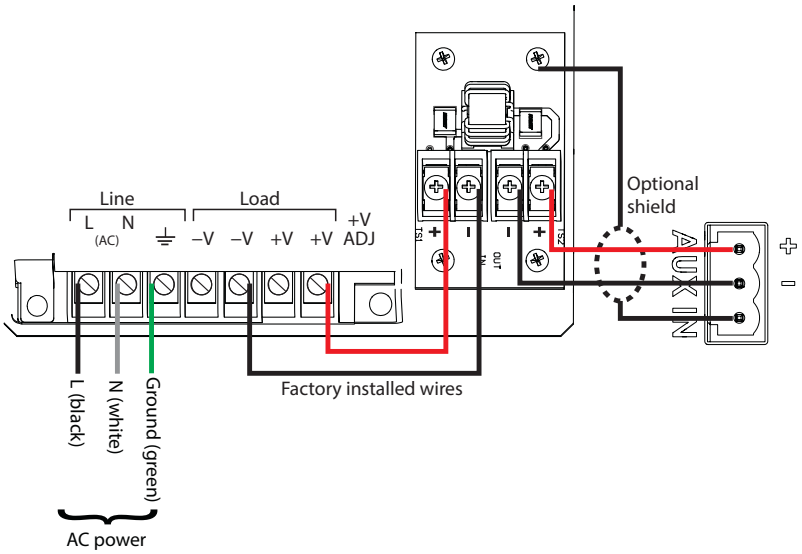

Figure 21. TX3-PS24-5AF connection with shield

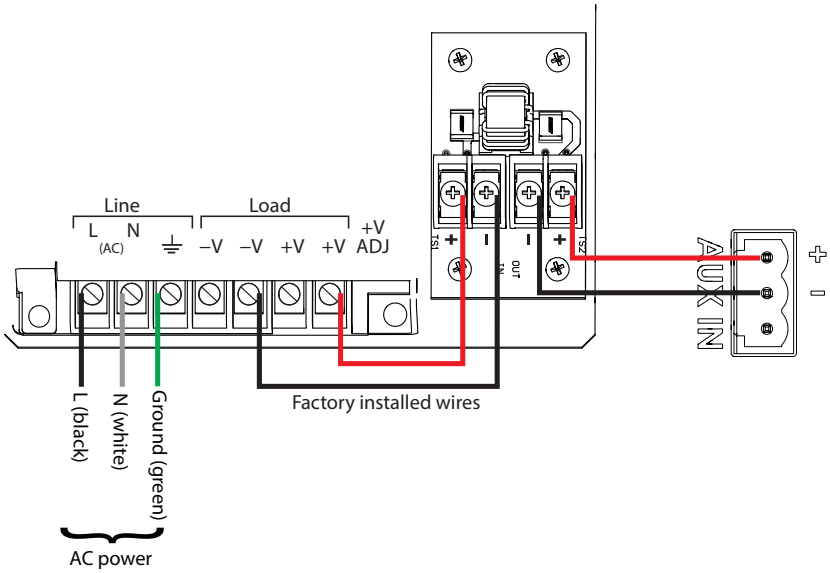

Figure 22. TX3-PS24-5AF connection without shield

3.6.3 Maximum Power Supply Wire Distances

The distance from the TX3-T10 to the power supply is a function of the wire gauge and the resistance generated by the cable by the power draw.

Do not exceed the maximum distances from the TX3-T10 to the power supply as indicated in table 2.

Table 2: Maximum Power Supply Wire Distances with TX3-PS24-5AF

Gauge	Distance
20	42 ft (13 m)
18	68 ft (21 m)
16	111 ft (34 m)
14	259 ft (79 m)

3.7 External Card Reader

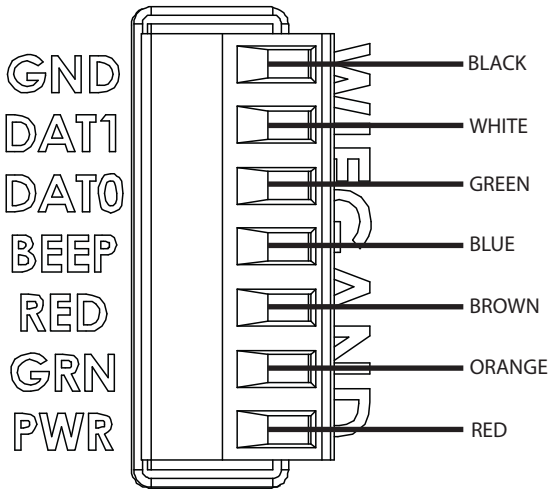

Figure 23. Card reader connections for the TX3-P300-HA and TX3-P500-HA readers

Connect the readers to the terminals shown in figure 23.

Card readers supplied by Mircom require a foil shielded multiple conductor stranded cable, 22-16 AWG. For example, use Belden 9535 or a similar cable.

Connect the shield to GND.

For other brands of card readers, follow the instructions in the manual for the card reader.

Note: Some card readers treat the green and red LED connections differently. You might need to switch the green and red LED connections for the LED to work properly. This note applies to both single line LED and dual line LED readers.

3.7.1 Card reader requirements

Card readers must meet the following minimum requirements in order to be compatible with Mircom's Card Access System:

- Standard Wiegand interface
- LED status indicator
- Warning or alarm buzzer
- 12 Volt operation
- Maximum distance 152.4 m (500 ft)
- Use 20 AWG for 152.4 m (500 ft)
- Use 22 AWG for 76.2 m (250 ft)
- For other card readers, consult your reader installation manual for recommended distances and gauges

3.8 Connecting a Postal Lock

Mircom sells a postal lock adapter: part number TX3-PL-ENCL.

- Connect the wires from the postal lock to one of the inputs on the TX3-T10.

4 Specifications

Dimensions
17 11/16” (196 mm) x 14 1/2” (368 mm) x 2 3/8" (60 mm)
Weight including TX3-T10BB
8.70 lb (3.94 kg)
Power over Ethernet
IEEE 802.3at
Auxiliary Power input
24-48 VDC / 30 W Use TX3-PS24-5AF for example
Output 1
2 Form C dry contact relays with these contact ratings: • 30 VDC/2 A or • 125 VAC/0.5 A
Display
Automotive grade 10.1” touch screen Vandal resistant 4mm glass Brightness: 1000 nits
Camera
5 Megapixel resolution
Speaker
2 W nominal, 4 W maximum
Audio Codec
G.711 μ-law
Video Codec
H.264
Operating Temperature
−30° C to 50° C

Connections
4 inputs 2 outputs 1 phone line connection 1 auxiliary power input 1 Ethernet 10/100/1000 PoE+ port 1 USB 2.0 port 1 Wiegand connection for optional reader
Proximity reader
125 kHz proximity reader Widely supported 26-bit Wiegand format
Rating
Weather and vandal resistant

5 Warranty and Warning Information

WARNING!

Please read this document **CAREFULLY**, as it contains important warnings, life-safety, and practical information about all products manufactured by the Mircom Group of Companies, including Mircom and Secutron branded products, which shall include without limitation all fire alarm, nurse call, building automation and access control and card access products (hereinafter individually or collectively, as applicable, referred to as "**Mircom System**").

NOTE TO ALL READERS:

1. **Nature of Warnings.** The within warnings are communicated to the reader out of an abundance of caution and create no legal obligation for Mircom Group of Companies, whatsoever. Without limiting the generality of the foregoing, this document shall NOT be construed as in any way altering the rights and obligations of the parties, governed by the legal documents that apply in any given circumstance.

2. **Application.** The warnings contained in this document apply to all Mircom System and shall be read in conjunction with:

   a. the product manual for the specific Mircom System that applies in given circumstances;

   b. legal documents that apply to the purchase and sale of a Mircom System, which may include the company's standard terms and conditions and warranty statements;

   c. other information about the Mircom System or the parties' rights and obligations as may be application to a given circumstance.

3. **Security and Insurance.** Regardless of its capabilities, no Mircom System is a substitute for property or life insurance. Nor is the system a substitute for property owners, renters, or other occupants to act prudently to prevent or minimize the harmful effects of an emergency situation. Building automation systems produced by the Mircom Group of Companies are not to be used as a fire, alarm, or life-safety system.

NOTE TO INSTALLERS:

All Mircom Systems have been carefully designed to be as effective as possible. However, there are circumstances where they may not provide protection. Some reasons for system failure include the following. As the only individual in contact with system users, please bring each item in this warning to the attention of the users of this Mircom System. Failure to properly inform system end-users of the circumstances in which the system might fail may result in over-reliance upon the system. As a result, it is imperative that you properly inform each customer for whom you install the system of the possible forms of failure:

4. **Inadequate Installation.** All Mircom Systems must be installed in accordance with all the applicable codes and standards in order to provide adequate protection. National standards require an inspection and approval to be conducted by the local authority having jurisdiction following the initial installation of the system and following any changes to the system. Such inspections ensure installation has been carried out properly.

5. **Inadequate Testing.** Most issues and/or problems that would prevent a Mircom System alarm from operating as intended, can be identified through regular testing and maintenance. The complete system should be tested by the local authority having jurisdiction immediately after a fire, storm, earthquake, accident, or any kind of construction activity inside or outside the premises. The testing should include all sensing devices, keypads, consoles, alarm indicating devices and any other operational devices that are part of the system.

NOTE TO USERS:

All Mircom Systems have been carefully designed to be as effective as possible. However, there are circumstances where they may not provide protection. Some reasons for system failure include the following. The end user can minimize the occurrence of any of the following by proper training, testing and maintenance of the Mircom Systems:

6. **Inadequate Testing and Maintenance.** It is imperative that the systems be periodically tested and subjected to preventative maintenance. Best practices, local codes, applicable laws and industry regulations, and any local authority having jurisdiction to do so, determine the frequency and type of testing that is required at a minimum. Mircom System may not function properly, and the occurrence of other system failures identified below may not be minimized, if the periodic testing and maintenance of Mircom Systems is not completed with diligence and as required.

7. **Improper Operation.** It is important that all system users be trained in the correct operation of the alarm system and that they know how to respond when the system indicates an alarm. A Mircom System may not function as intended during an emergency situation where the user is unable to operate

a panic or emergency switch by reason of permanent or temporary physical disability, inability to reach the device in time, unfamiliarity with the correct operation, or related circumstances.

8. **Insufficient Time.** There may be circumstances when a Mircom System will operate as intended, yet the occupants will not be protected from the emergency due to their inability to respond to the warnings in a timely manner. If the system is monitored, the response may not occur in time enough to protect the occupants or their belongings.

9. **Carelessness or Safety Hazards.** Moreover, smoke detectors may not provide timely warning of fires caused by carelessness or safety hazards such as smoking in bed, violent explosions, escaping gas, improper storage of flammable materials, overloaded electrical circuits or children playing with matches or arson.

10. **Power Failure.** Some Mircom System components require adequate electrical power supply to operate. Examples include: smoke detectors, beacons, HVAC, and lighting controllers. If a device operates only by AC power, any interruption, however brief, will render that device inoperative while it does not have power. Power interruptions of any length are often accompanied by voltage fluctuations which may damage Mircom Systems or other electronic equipment. After a power interruption has occurred, immediately conduct a complete system test to ensure that the system operates as intended.

11. **Battery Failure.** If the Mircom System or any device connected to the system operates from batteries it is possible for the batteries to fail. Even if the batteries have not failed, they must be fully charged, in good condition, and installed correctly. Some Mircom Systems use replaceable batteries, which have a limited life-span. The expected battery life is variable and in part dependent on the device environment, usage and type. Ambient conditions such as high humidity, high or low temperatures, or large temperature fluctuations may reduce the expected battery life. Moreover, some Mircom Systems do not have a battery monitor that would alert the user in the event that the battery is nearing its end of life. Regular testing and replacements are vital for ensuring that the batteries function as expected, whether or not a device has a low-battery monitor.

12. **Physical Obstructions.** Motion sensors that are part of a Mircom System must be kept clear of any obstacles which impede the sensors' ability to detect movement. Signals being communicated by a Mircom System may not reach the receiver if an item (such as metal, water, or concrete) is placed on or near the radio path. Deliberate jamming or other inadvertent radio signal interference can also negatively affect system operation.

13. **Wireless Devices Placement Proximity.** Moreover all wireless devices must be a minimum and maximum distance away from large metal objects, such as refrigerators. As the end user, you are required to consult the specific Mircom System manual and application guide for any maximum distances required between devices and suggested placement of wireless devices for optimal functioning.

14. **Failure to Trigger Sensors.** Moreover, Mircom Systems may fail to operate as intended if, motion, heat, carbon monoxide (CO) and/or smoke sensors, are not triggered.

    a. Sensors in a fire system may fail to be triggered when the fire is in a chimney, walls, roof, or on the other side of closed doors. Smoke and heat detectors may not detect smoke or heat from fires on another level of the residence or building. In this situation the control panel may not alert occupants of a fire.

    b. Sensors in a nurse call system may fail to be triggered when movement is occurring outside of the motion sensors' range. For example, if movement is occurring on the other side of closed doors or on another level of the residence or building the motion detector may not be triggered. In this situation the central controller may not register an alarm signal.

15. **Interference with Audible Notification Appliances.** Audible notification appliances may be interfered with by other noise sources such as stereos, radios, televisions, air conditioners, appliances, or passing traffic. Audible notification appliances, however loud, may not be heard by a hearing-impaired person.

16. **Other Impairments.** Alarm notification appliances such as sirens, bells, horns, or strobes may not warn or waken a sleeping occupant if there is an intervening wall or door. It is less likely that the occupants will be alerted or awakened when notification appliances are located on a different level of the residence or premise.

17. **Software Malfunction.** Most Mircom Systems contain software. No warranties are provided as to the software components of any products or stand-alone software products within a Mircom System. For a full statement of the warranties and exclusions and limitations of liability please refer to the company's standard Terms and Conditions and Warranties.

18. **Telephone Line/Network Malfunction.** Telephone service can cause system failure where telephone lines/networks are relied upon by a Mircom System. Alarms and information coming from a Mircom System may not be transmitted if a phone line/network is out of service or busy for a certain period of time. Alarms and information may not be transmitted where telephone lines/networks have been compromised by criminal tampering, local construction, storms or earthquakes.

19. **Component Failure.** Although every effort has been made to make this Mircom System as reliable as possible, the system may fail to function as intended due to the failure of a component.

20. **Integrated Products.** Mircom System might not function as intended if it is connected to a non-Mircom product or to a Mircom product that is deemed non-compatible with a particular Mircom System. A list of compatible products can be requested and obtained.

21. A Mircom System's Auto Configuration feature is intended to assign the Alarm process type to all inputs and to provide an initial set up by detecting connected devices and generates a basic job configuration upon the initial installation of the Mircom System. Mircom makes no representations, warranties or guarantees regarding the accuracy or suitability of the basic job configuration generated upon installation, for any specific site requirements.
The end user shall be solely and exclusively responsible to thoroughly review the basic job generated by the auto configuration feature upon initial installation and to implement necessary adjustments and modifications to customize the job configuration in accordance with the functional and/or technical requirements of the site. Mircom expressly disclaims any responsibility or liability for any failure, malfunction or defective operation of a Mircom System and any associated components, resulting from the end user's failure to customize or adjust the job configuration accordingly.
By installing and utilizing the Mircom System, the user acknowledges and agrees that Mircom shall not be liable for any claims, losses, damages, or defects arising from the failure of the user or installer and those for whom it is responsible at law, to customize the basic job configuration generated on the initial set-up in accordance with the requirements of the site.

Warranty

Purchase of all Mircom products is governed by:

https://www.mircom.com/product-warranty

https://www.mircom.com/purchase-terms-and-conditions

https://www.mircom.com/software-license-terms-and-conditions

6 Special Notices

Product Model Number: TX3-T10

AC REN (U.S.): 0.1B

AC REN (CANADA): 0.1B

Complies With

- FCC Part15, Subpart B, Class B - Unintentional Radiators
- FCC Part 15 Subpart C - Intentional Radiators
- TIA-968-B and TIA-968-B-2:2015 Addendum 2 (Technical requirements for connection of terminal equipment to the telephone network)
- ISED CS-03 Issue 9. Part I - Compliance Specification for Terminal Equipment, Terminal Systems, Network Protection Devices, Connection Arrangements and Hearing Aids Compatibility
- ISED Canada ICES-003, Issue 6, Class B - Information Technology Equipment (Including Digital Apparatus)

This device complies with Part 15 / ICES-003 of the FCC / Industry Canada Rules. Operation is subject to the following two conditions:

(1) This device may not cause harmful interference, and

(2) This device must accept any interference received, including interference that may cause undesired operation.

Identifiers

FCC:

- BLE Module: Y82-DA14695MOD

IC:

- BLE Module: 9576A-DA14695MOD
- Dialer Module: IC:1156A-TX3T10

ACTA:

- Dialer Module: US:1M8OT01BTX3T10

Industry Canada Notice for all TX3-T10 Series Products Sold in Canada

This product meets the applicable Innovation, Science and Economic Development Canada technical specifications.

The Ringer Equivalence Number is an indication of the maximum number of devices allowed to be connected to a telephone interface. The termination on an interface may consist of any combination of devices subject only to the requirement that the sum of the RENs of all the devices does not exceed five.

CAN ICES-3 (B)/NBM-3(B)

Le présent produit est conforme aux spécifications techniques applicables d'Innovation, Sciences et Développement économique Canada.

L'indice d'équivalence de la sonnerie (IES) sert à indiquet le numbre maximal de terminaux qui peuvent être raccordés à une interface téléphonique. La terminaison d'une interface peut consister en une combinaison quelconque de dispositifs, à la seule condition que la somme d'indices d'équivalence de la sonnerie de tous les dispostifs n'excède pas 5.

FCC Notice for all TX3-T10 Series Products Sold in the U.S.A.

Note

This equipment has been tested and found to comply with the limits for a Class B digital devices, pursuant to Part 15 of the FCC Rules. These limits are designed to provide reasonable protection against harmful interference in a residential installation. This equipment generates, uses, and can radiate radio frequency energy and, if not installed and used in accordance with the instruction manual, may cause harmful interference to radio communications. However, there is no guarantee that interference will not occur in a particular installation. If this equipment does cause harmful interference to radio or television reception, which can be determined by turning the equipment off and on, the user is encouraged to try to correct the interference by one of more of the following measures:

- Reorient or relocate the receiving antenna
- Increase the separation between the equipment and receiver
- Connect the equipment into an outlet on a circuit different from that to which the receiver is connected.
- Consult the dealer or an experienced radio/TV technician for help.

Warning

Changes or modifications not expressly approved by Mircom could void the user's authority to operate the equipment.

Type of Service

The TX3 is designed to be used on standard device telephone lines. It connects to the telephone line by means of a standard jack called the USOC RJ-11C (or USOC RJ45S). Connection to telephone company-provided coin service (central office implemented systems) is prohibited. Connection to party lines service is subject to state tariffs. Contact the state public utility commission, public service commission or corporation commission for information.

Telephone Company Procedures

The goal of the telephone company is to provide you with the best service it can. In order to do this, it may occasionally be necessary for them to make changes in their equipment, operations or procedures. If these changes might affect your service or the operation of your equipment, the telephone company will give you notice, in writing, to allow you to make any changes necessary to maintain uninterrupted service.

In certain circumstances, it may be necessary for the telephone company to request information from you concerning the equipment which you have connected to your telephone line. Upon request of the telephone company, provide the FCC registration number and the ringer equivalence number (REN); both of these items are listed on the equipment label. The sum of all of the RENs on your telephone lines should be less than five in order to assure proper service from the telephone company. In some cases, a sum of five may not be useable on a given line.

Changes to Telephone Service

The telephone company may make changes in its facilities, equipment, operations or procedures that could affect the operation of the equipment. If this happens the telephone company will provide advance notice in order for you to make necessary modifications to maintain uninterrupted service.

Ringer Equivalence Number

The REN is used to determine the number of devices that may be connected to a telephone line. Excessive RENs on a telephone line may result in the devices not ringing in response to an incoming call. In most but not all areas, the sum of RENs should not exceed five (5.0). To be certain of the number of devices that may be connected to a line, as determined by the total RENs, contact the local telephone company. For products approved after July 23, 2001, the REN for this product is Customer Information 3 July 2003 part of the product identifier that has the

format US:AAAEQ##TXXXX. The digits represented by ## are the REN without a decimal point (e.g., 03 is a REN of 0.3). For earlier products, the REN is separately shown on the label.

If Problems Arise

If any of your telephone equipment is not operating properly, you should immediately remove it from your telephone line, as it may cause harm to the telephone network. If the telephone company notes a problem, they may temporarily discontinue service. When practical, they will notify you in advance of this disconnection. If advance notice is not feasible, you will be notified as soon as possible. When you are notified, you will be given the opportunity to correct the problem and informed of your right to file a complaint with the FCC. Contact your telephone company if you have any questions about your telephone line. In the event repairs are ever needed on the Communicator, they should be performed by Mircom or an authorized representative of Mircom. For information contact Mircom at the address and telephone numbers on page 2.

If this equipment TX3-T10 causes harm to the telephone network, the telephone company will notify you in advance that temporary discontinuance of service may be required. But if advance notice isn't practical, the telephone company will notify the customer as soon as possible. Also, you will be advised of your right to file a complaint with the FCC if you believe it is necessary.

Product Identifier

This equipment complies with Part 68 of the FCC rules and the requirements adopted by the ACTA. On the back of this equipment is a label that contains, among other information, a product identifier in the format US:1M8OT01BTX3T10. If requested, this number must be provided to the telephone company.

Telephone Connection

A plug and jack used to connect this equipment to the premises wiring and telephone network must comply with the applicable FCC Part 68 rules and requirements adopted by the ACTA. A compliant telephone cord and modular plug is provided with this product. It is designed to be connected to a compatible modular jack that is also compliant. See installation instructions for details.

Equipment Failure

If trouble is experienced with this equipment TX3-T10, for repair or warranty information, please contact Mircom using the numbers on page 2. If the equipment is causing harm to the telephone network, the telephone company may request that you disconnect the equipment until the problem is resolved.

Use With Alarm Auto Dialers

If your institution has specially wired alarm equipment connected to the telephone line, ensure the installation of this TX3-T10 does not disable your alarm equipment. If you have questions about what will disable alarm equipment, consult your telephone company or a qualified installer.