GeoVision inc
The Vision of Security

Quick Start Guide

GV-AI ISP Camera

- GV-GBLN4800
- GV-GDRN4800
- GV-GEBN4800

Before attempting to connect or operate this product,
please read these instructions carefully and save this manual for future use.

AIISP-QG-B

© 2026 GeoVision, Inc. All rights reserved.
Under the copyright laws, this manual may not be copied, in whole or in part, without the written consent of GeoVision.

Every effort has been made to ensure that the information in this manual is accurate. GeoVision, Inc. makes no expressed or implied warranty of any kind and assumes no responsibility for errors or omissions. No liability is assumed for incidental or consequential damages arising from the use of the information or products contained herein. Features and specifications are subject to change without notice.

GeoVision, Inc.
9F, No. 246, Sec. 1, Neihu Rd.,
Neihu District, Taipei, Taiwan
Tel: +886-2-8797-8377
Fax: +886-2-8797-8335
http://www.geovision.com.tw

Trademarks used in this manual: *GeoVision*, the *GeoVision* logo and GV series products are trademarks of GeoVision, Inc. *Windows* is the registered trademark of Microsoft Corporation.

January 2026

Scan the following QR codes for product warranty and technical support policy:

[Warranty] **[Technical Support Policy]**

Warning and Caution

- If the product does not work properly, please contact your dealer or the nearest service center. Never attempt to disassemble the camera yourself. (We shall not be responsible for any problems caused by unauthorized repair or maintenance.)
- Keep away from liquid while use.
- In the use of the product, you must be strict compliance with the electrical safety regulations of the nation and region. When the product is mounted on wall, the device shall be firmly fixed.
- Do not use camera beyond specified voltage range.
- Do not drop the camera or subject it to physical shock.
- Avoid touching the camera lens.
- If cleaning is necessary, please use clean cloth to wipe it gently.
- Do not aim the camera at the sun or extra bright place.
- Do not place the camera in extremely hot, cold, dusty or damp locations, and do not expose it to high electromagnetic radiation.
- To avoid heat accumulation, good ventilation is required for operating environment.

Contents

1. Overview 1

1.1 GV-GEBN4800 1

1.2 GV-GDRN4800 2

1.3 GV-GBLN4800 3

2. Installation 4

2.1 Connecting Network Cable 4

2.2 GV-GEBN4800 5

2.2 GV-GDRN4800 7

2.3 GV-GBLN4800 9

3. Accessing the Network Camera 11

3.1 Looking Up the Dynamic IP Address 11

3.2 Configuring the IP Address 13

4. The Live View 14

5. Upgrading System Firmware 16

6. Restoring to Factory Default 18

1. Overview

1.1 GV-GEBN4800

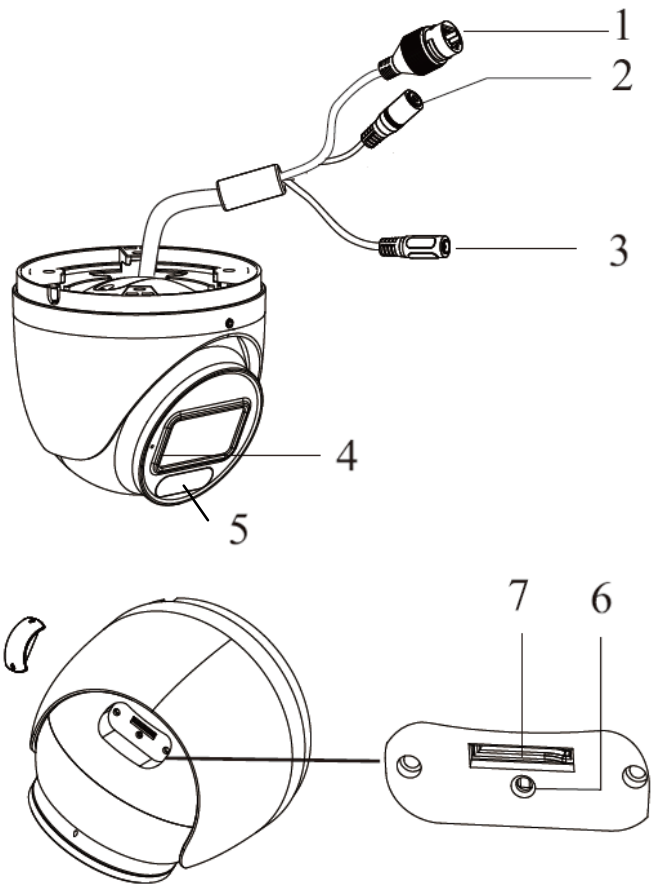

1	Ethernet connector (PoE)	2	MIC-Audio input connector
3	Power connector (DC 12V)	4	Microphone
5	Warm LED x 3	6	Reset button
7	MicroSD card slot		

Note:

1. It is recommended to install the waterproof connector for outdoor installation.
2. To load default settings, press and hold the Reset button for more than 10 seconds.

1.2 GV-GDRN4800

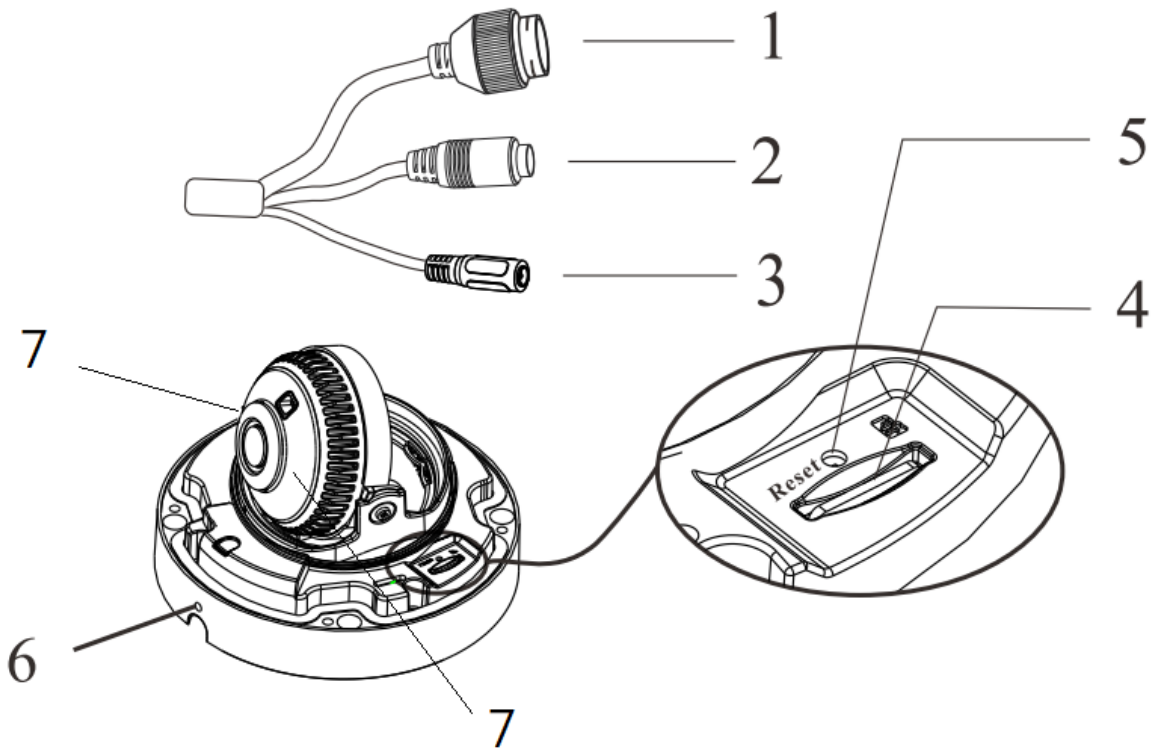

1	Ethernet connector (PoE)	2	MIC-Audio input connector
3	Power connector (DC 12V)	4	MicroSD card slot
5	Reset button	6	Microphone
7	White LED x 2		

Note:

1. It is recommended to install the waterproof connector for outdoor installation.
2. To load default settings, press and hold the Reset button for more than 10 seconds.

1.3 GV-GBLN4800

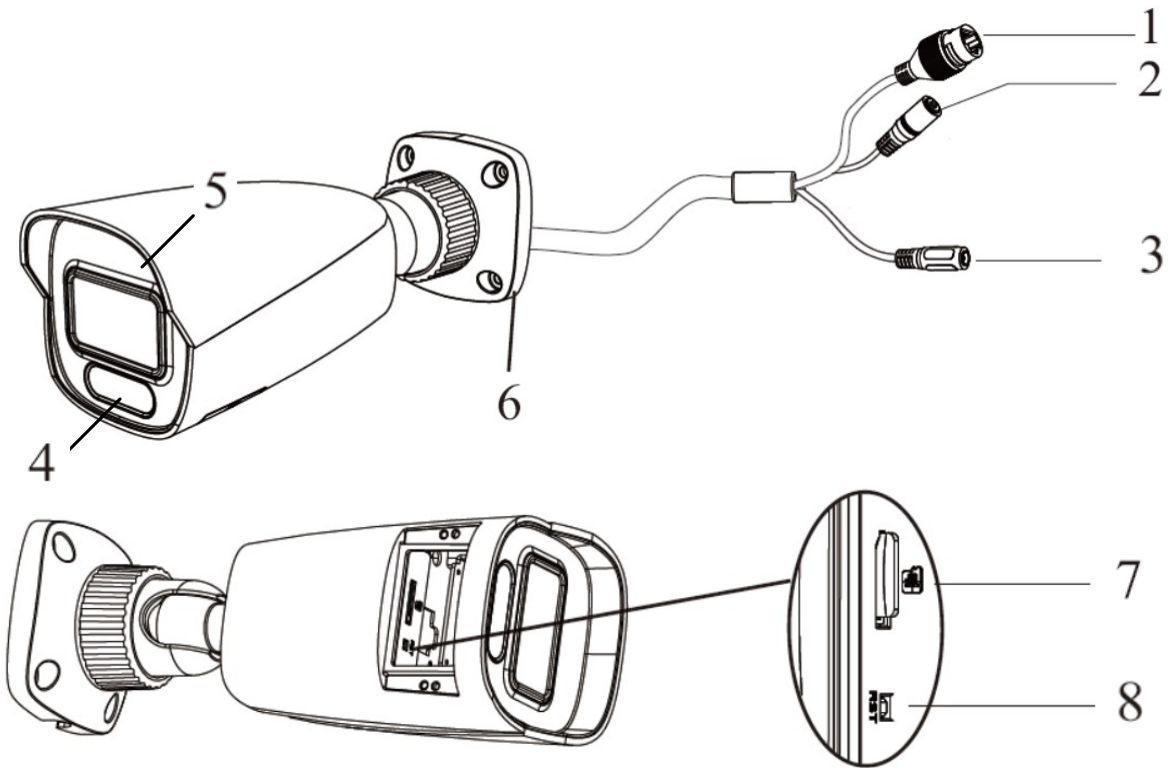

1	Ethernet connector (PoE)	2	MIC-Audio input connector
3	Power connector (DC 12V)	4	Warm LED x 3
5	Microphone	6	Mounting base
7	MicroSD card slot	8	Reset button

Note:

3. It is recommended to install the waterproof connector for outdoor installation.
4. To load default settings, press and hold the Reset button for more than 10 seconds.

2. Installation

Make sure that the wall or ceiling can support at least 3 times the camera's weight and that the installation is done in a dry environment.

2.1 Connecting Network Cable

During installation, make sure to waterproof the network cable as illustrated below.

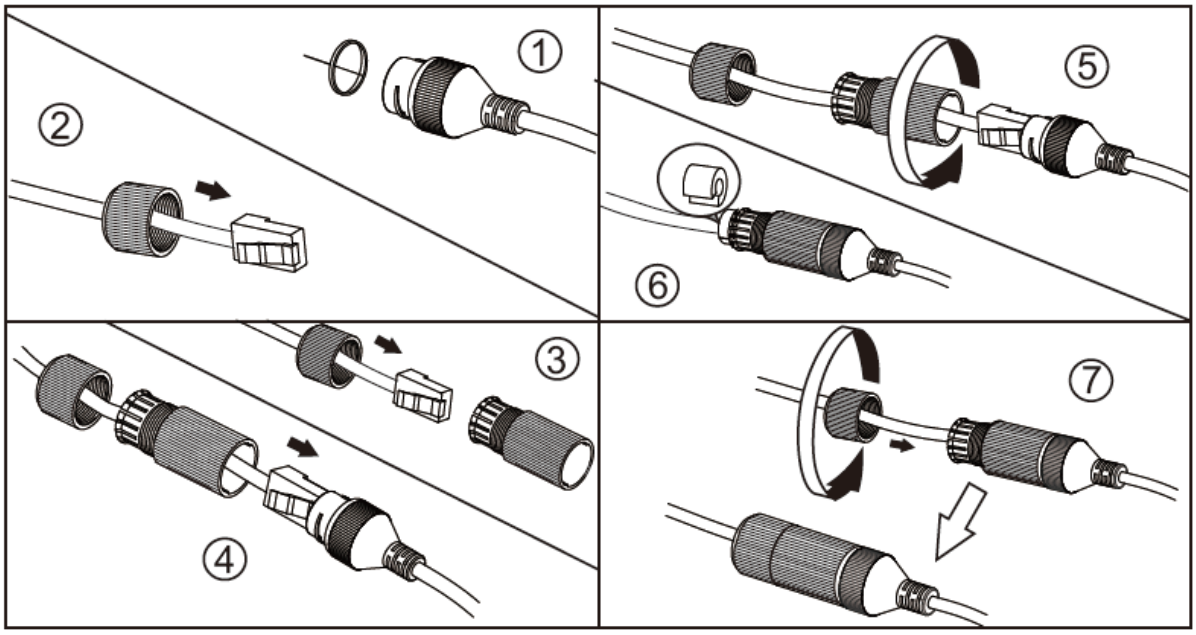

Note: If the RJ-45 connector of the network cable has a jacket and cannot be threaded through the kit, remove the jacket. If the jacket cannot be removed, cut off the connector and install an RJ 45 connector without the jacket.

2.2 GV-GEBN4800

1. Loosen the set screw to disassemble the camera.

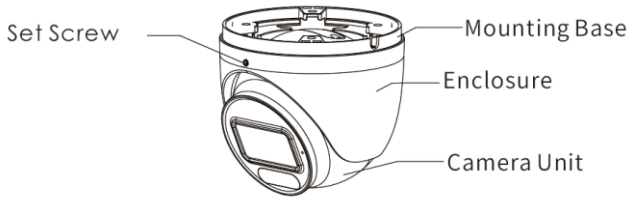

2. Unscrew the cover of the camera unit and then insert a microSD card. After that, install back the cover and ensure the cover is installed firmly.

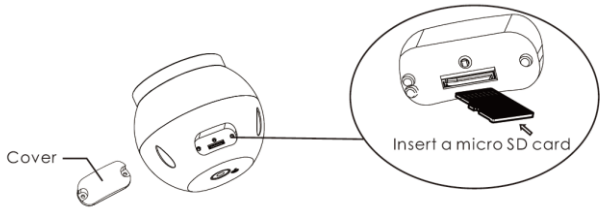

1. Drill the screw holes and the cable hole on the ceiling according to the drill template. Then route and connect the cables. See *2.1 Connecting Network Cable* to waterproof the network cable.

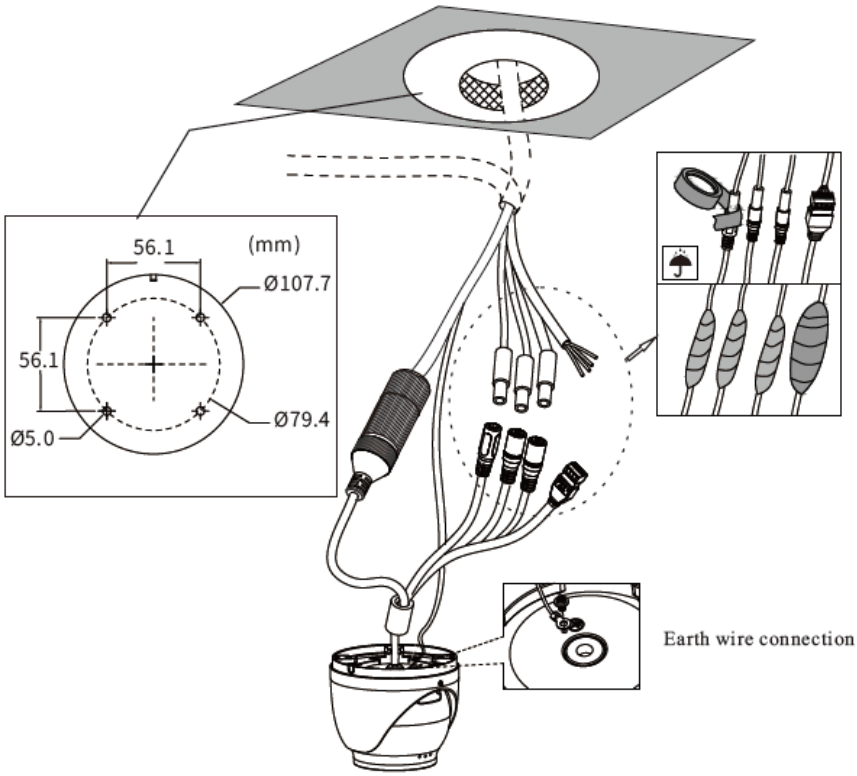

Note: The above illustration is only an example. Your camera model may not have as many connectors on the data cable.

3. Secure the mounting base to the ceiling or wall with the screws provided.

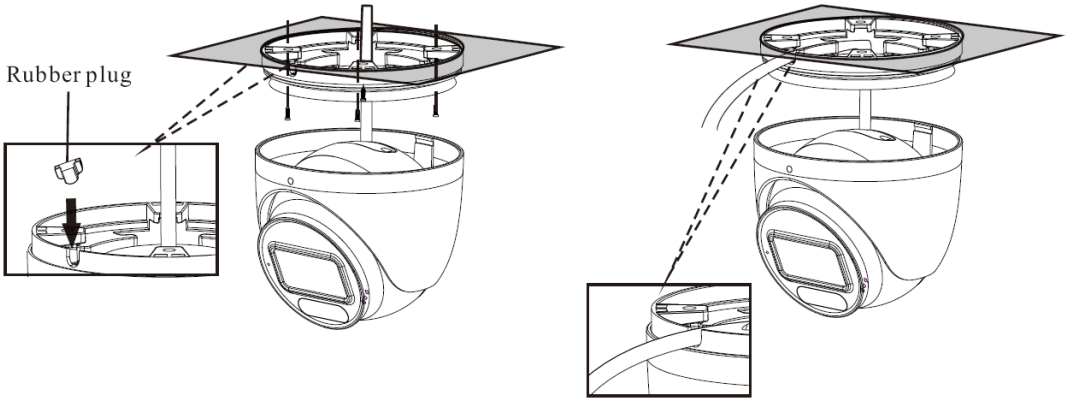

4. Install the camera unit and enclosure to the mounting base.

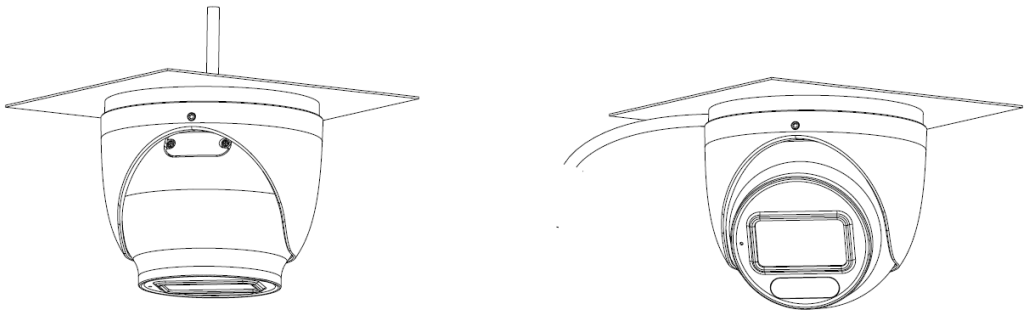

5. Adjust the camera unit to obtain an optimum viewing angle.

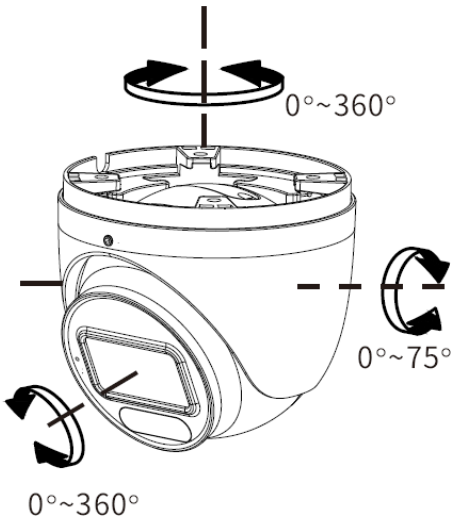

6. Secure the camera with the set screw.

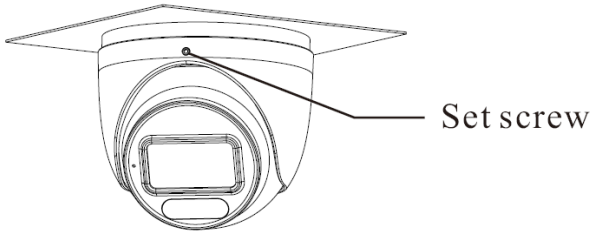

2.2 GV-GDRN4800

Note: You should reinstall the lower dome within 4 hours of removal. Do not remove the protective film until installation is complete.

1. Attach the drill template to the place where you want to fix the camera and then drill the screw holes and the cable hole on the wall according to the drill template. 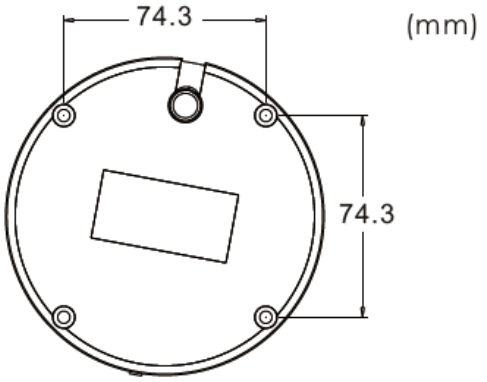 	2. Rotate the trim ring anticlockwise to remove it from the camera. 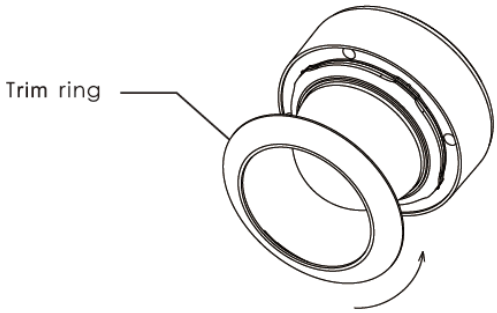
3. Loosen the screws to open the lower dome.	4. Route and connect the cables.
5. Secure the camera to the wall with screws provided as shown below. 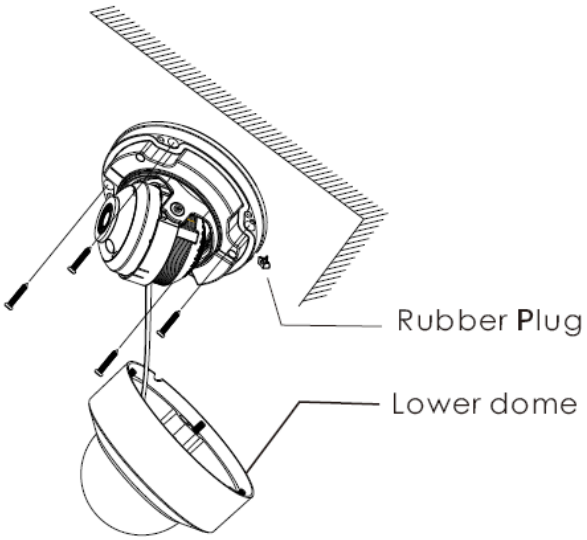 	6. Three-axis adjustment. Before adjustment, view the image of the camera on a monitor and then adjust the camera according to the figure below to get an optimum angle. 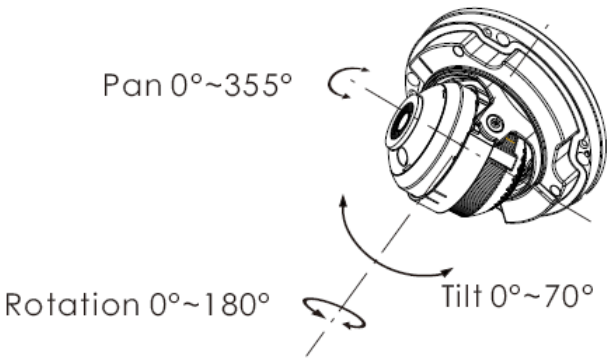

7. Install the lower dome back to the camera and fix it with the screws. Then put the trim ring onto the lower dome and then rotate it clockwise until it is locked.

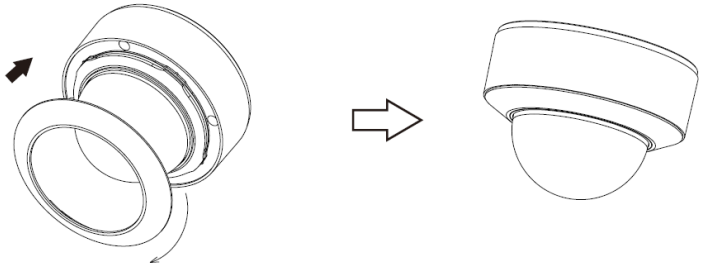

2.3 GV-GBLN4800

1. Install a microSD card.

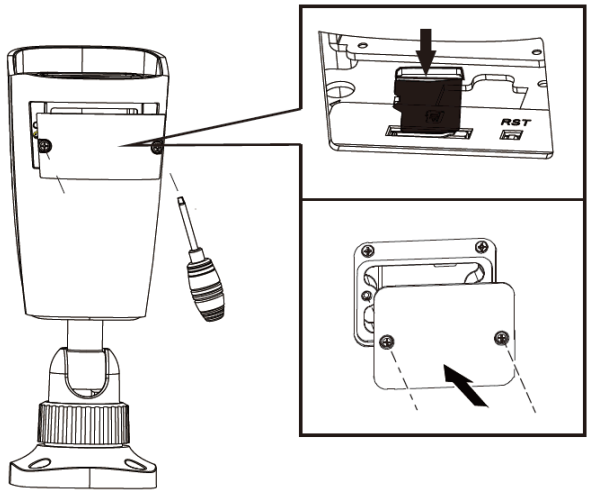

2. Drill the screw holes and the cable hole (if you want to route through the ceiling) on the wall or ceiling according to the drill template.

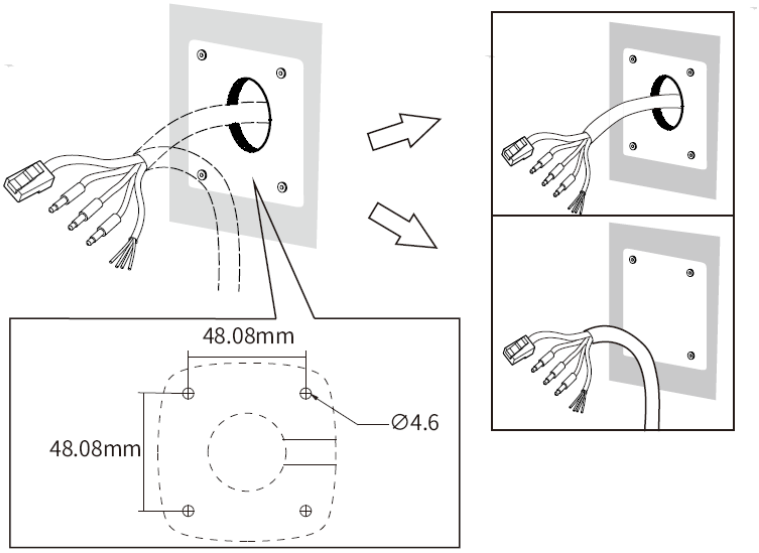

3. Route the cables and connect the relevant cables. See *2.1 Connecting Network Cable* to waterproof the network cable.

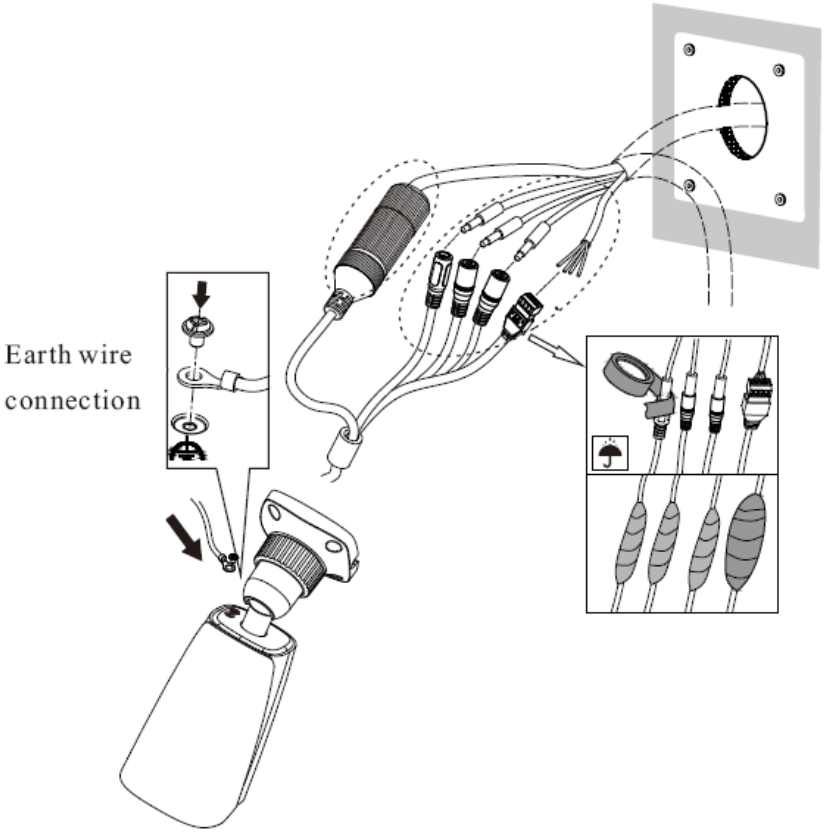

Note: The above illustration is only an example. Your camera model may not have as many connectors on the data cable.

4. Fasten the mounting base to the wall with the screws provided.

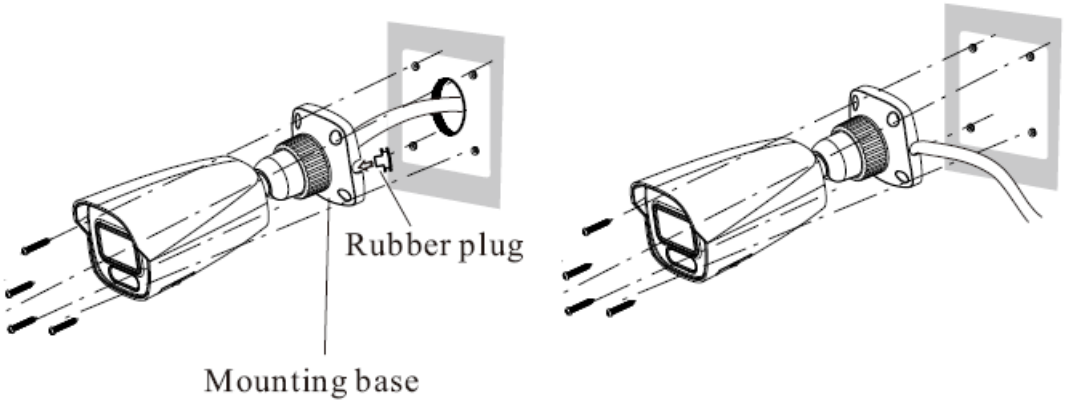

5. Loosen the adjusting ring to adjust the viewing angle of the camera. Before adjustment, view the image of the camera on a monitor.

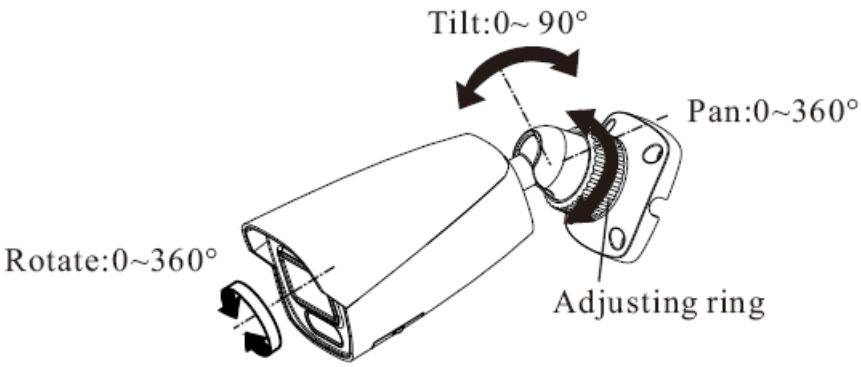

6. Tighten the adjusting ring to finish the installation.

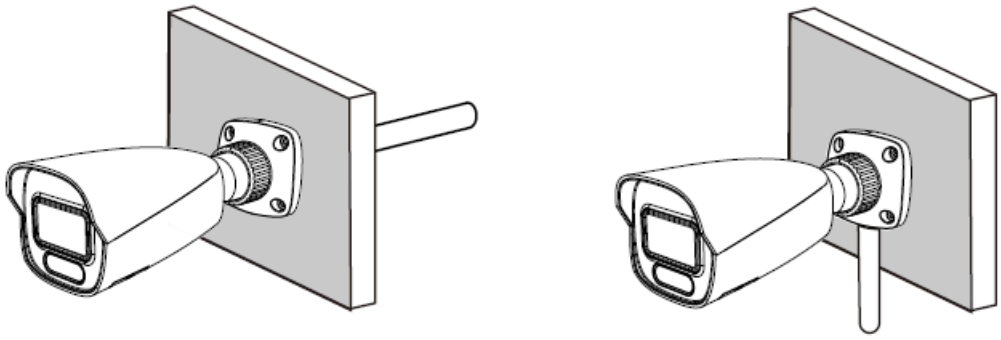

3. Accessing the Network Camera

3.1 Looking Up the Dynamic IP Address

By default, when the camera is connected to a LAN with a DHCP server, it is automatically allocated a dynamic IP address. Follow the steps below to look up its IP address, and then use that address to access its Web interface.

Note: By default, the Administrator's username is **admin** and cannot be modified.

---

1. Make sure the PC used to configure the IP address is under the same LAN as the camera. Download and install **GV-IP Device Utility** from the company website.
2. On the GV-IP Utility window, click the button to search for IP devices connected to the same LAN. To sort, click the **Name** or **Mac Address** column.
3. Find the camera with its Mac Address, and click on its IP address.

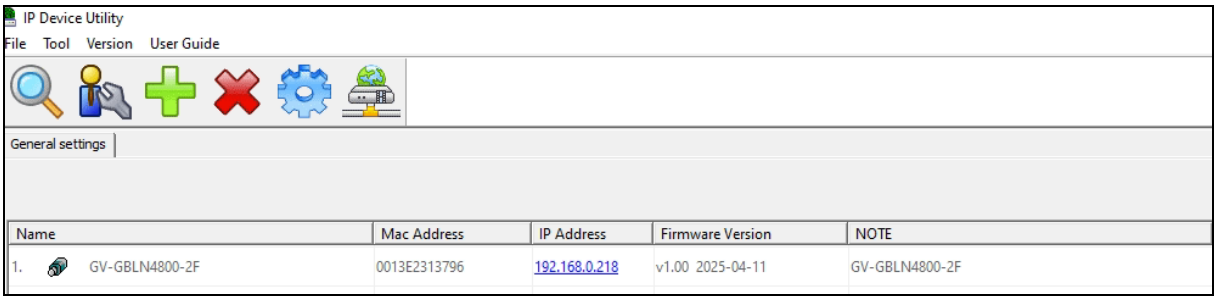

4. For first-time users, you are requested to create a password.

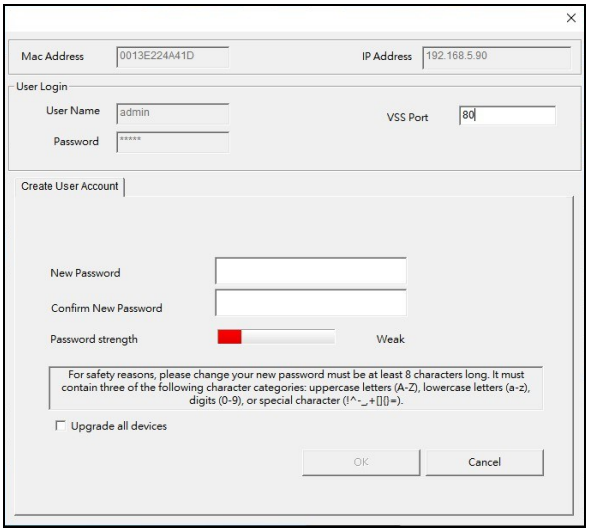

5. Type a new password, and click **OK**.
6. Click on its IP address on the Utility window again, and select **Web Page** to access its Web interface.
7. Type the set password on the login page and click **Login**.

Note: To change the password using GV-IP Device Utility, click on the camera's IP address, and select **Configure** > **Change Password**. Alternatively, you can change the password on the camera's Web interface by clicking **Config** > **Security** > **User**; see "Modify User" in *3.6.1 User Configuration* in the user's manual.

3.2 Configuring the IP Address

If the camera is connected to a LAN without a DHCP server, the default IP address will be **192.168.0.10**. To avoid IP conflict with other GV-IP devices on the same LAN, configure an IP address as described below.

1. Open your Web browser, and type the default IP address **192.168.0.10**.
2. Type the default username **admin**, and a password. Click **Login**.
3. Go to **Config** > **Network** > **TCP/IP** to set the IP address.
4. Select **Use the following IP address** and enter the static IP address and other parameters.

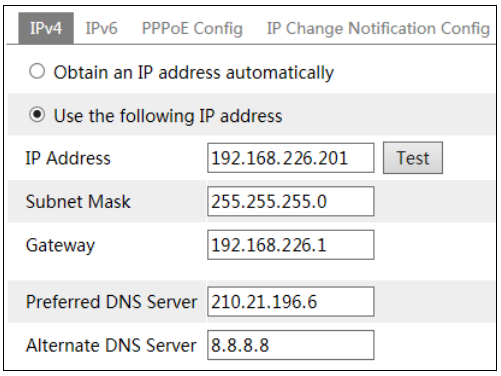

5. Click **Save**. The camera can now be accessed with the configured IP address.

4. The Live View

Once you log in to the Web interface, the live view will be displayed as shown below.

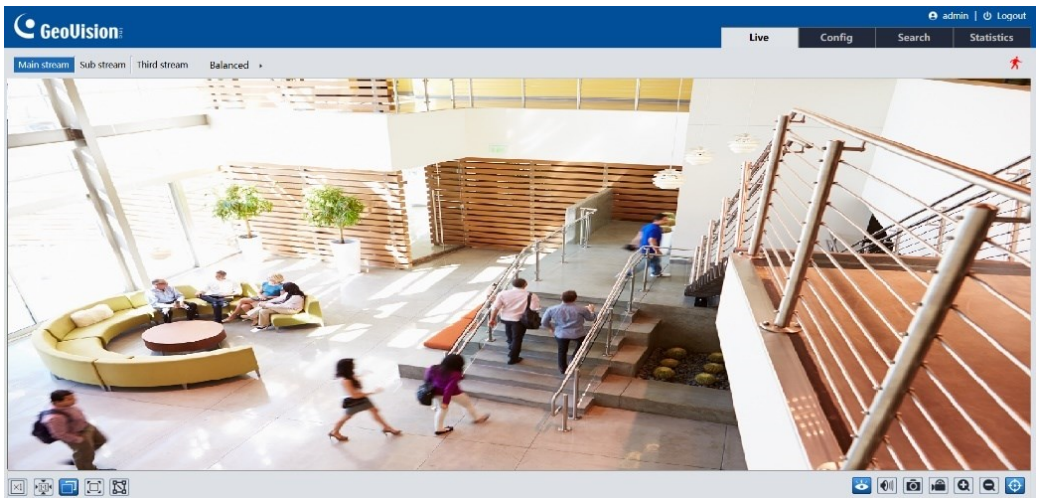

The descriptions of the icons on the live view interface are as follows:

Icon	Description	Icon	Description
	Original size		Motion alarm indicator
	Fit correct scale		Color abnormal indicator
	Auto (fill the window)		Abnormal clarity indicator
	Full screen		Scene Change indicator
	Measure Tool		Audio exception indicator
	Start/stop live view		Line crossing indicator
	Enable/disable audio		Intrusion indicator
	Snapshot		Region entrance indicator
	Start/stop local recording		Region exiting indicator
	Zoom in		Face detection indicator
	Zoom out		Target counting (by line) indicator
	Face Detection (when face event is selected)		Object detection indicator (object abandoned/missing)
	Rule information display		SD card recording indicator

For details, see *2. The Live View* in the user's manual.

At the upper right corner of the Web Interface, you can find the following options:

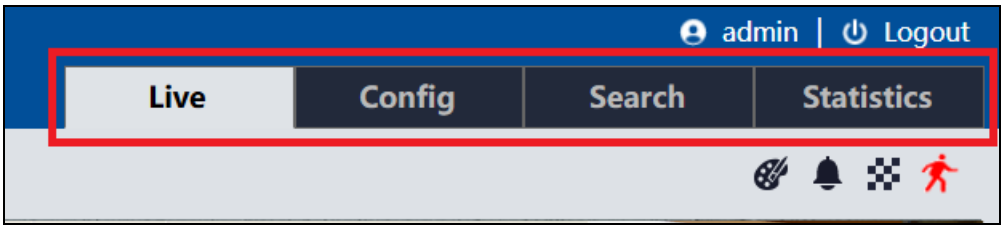

- **Live View:** Access the live view screen. See *2. Live View* in the user's manual.
- **Config:** Access the camera's configuration interface. See *3. Network Camera Conifguration* in the user's manual.
- **Search:** Access playback videos. See *4. Search* in the user's manual.
- **Statistics:** Access the counting data of Tareget Counting by Line. See *3.4.6 Target Counting by Line* in the user's manual.

Note: For plug-in free live view:

- When the main stream is set over 1080P, only the sub stream or third-stream tab can be displayed on the live view interface.
- Local recording is not supported and the preview mode switch (real-time/balanced/fluent mode) is not available too.

5. Upgrading System Firmware

GeoVision periodically releases updated firmware on the company website. To load the new firmware into the camera, follow the instructions below.

Using Camera's Web Interface

1. On the Web interface, click **Config** > **Maintenance** > **Upgrade.**

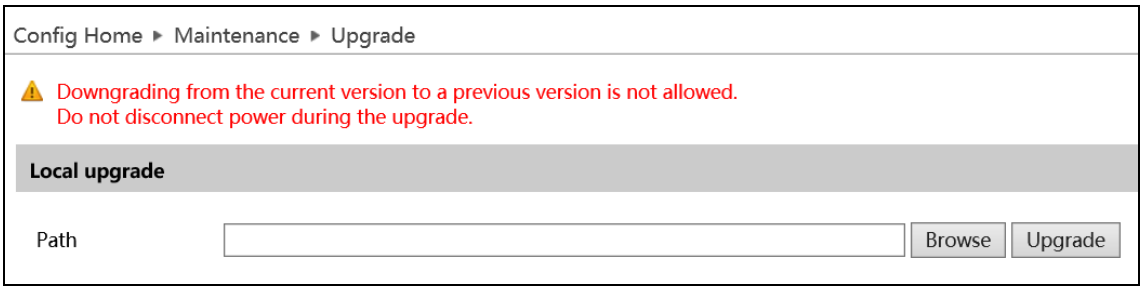

2. Click **Browse** to locate the firmware file saved at your local computer.
3. Click **Upgrade** to start upgrading the firmware.
4. After upgrading, the camera will restart automatically.

Using GV-IP Device Utility

1. On the GV-IP Utility window, find the camera with its Mac Address, click on its IP address, and select **Configure**. The login credentials are requested.

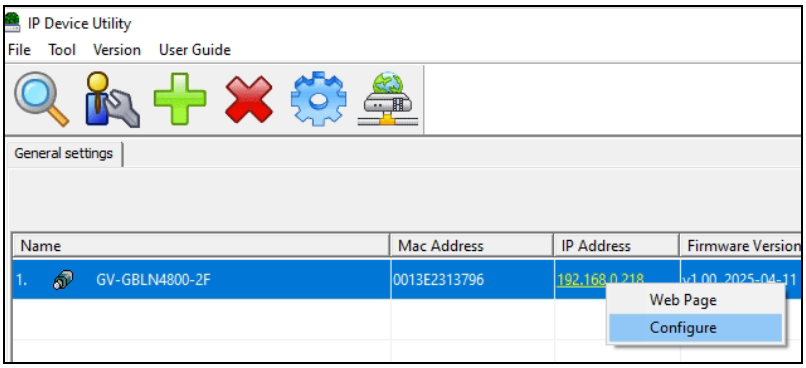

2. Click the **Firmware Upgrade** tab, click the **Browse** button to locate the firmware file saved at your local computer.

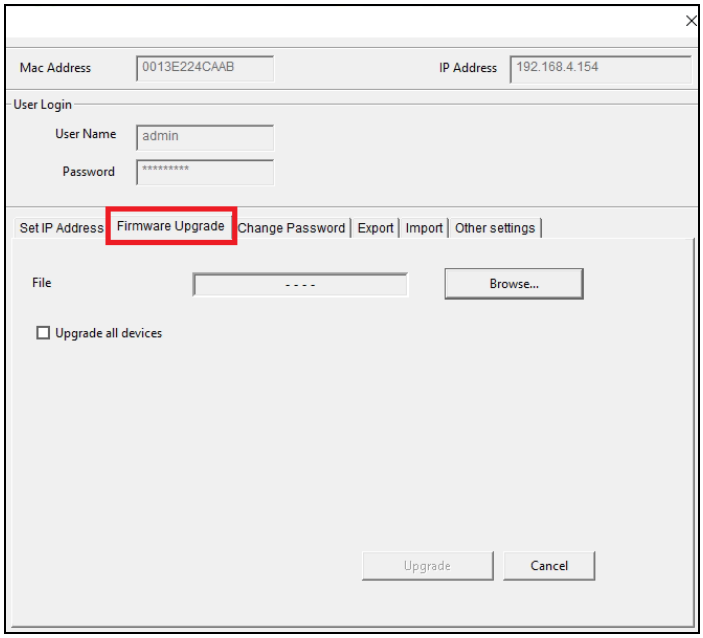

3. Click the **Upgrade** button to start upgrading the firmware.
4. After upgrading, the camera will restart automatically.

6. Restoring to Factory Default

If for any reason the camera is not responding correctly, you can restore the camera back to its factory default settings using the Web interface or the Reset Button.

On the Camera

1. Find the **Reset** button on the camera (see *1. Camera Overview*).
2. Press and hold the button for more than 10 seconds to restore to factory default settings.

On the Web Interface
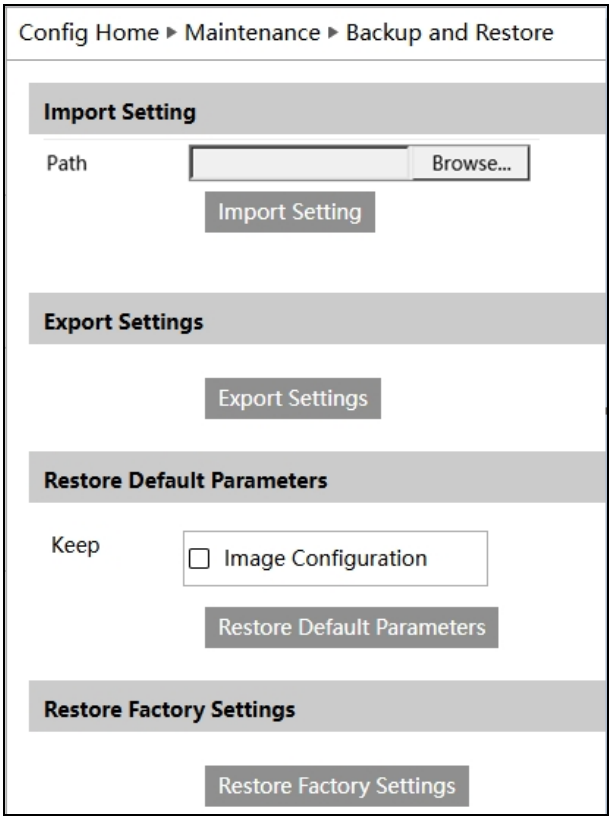
1. On the Web interface, click **Config** >**Maintenance** > **Backup and Restore**.
2. Click Restore **Factory Settings** and then verify the password to restore all system settings to the default factory settings. Or, select **Restore Default Parameters** to restore default settings *without resetting passwords.* You can also select **Keep Image Configuration** to retain current image settings.