PFC-4410G3
Conventional Releasing Panel

Installation, Operations & Programming Manual

POTTER
The Symbol of Protection

Potter Electric Signal Company, LLC
St. Louis, MO
Customer Service: (866) 240-1870 • Technical Support: (866) 956-1211 • Fax: (314) 595-6999
www.pottersignal.com

Manual #5403751–REV G
11/25

POTTER
The Symbol of Protection

WARRANTY INFORMATION

The essential purpose of any sale or contract for sale of any of the products listed in the POTTER catalog or price list is the furnishing of that product. It is expressly understood that in furnishing said product, POTTER does not agree to insure the Purchaser against any losses the Purchaser may incur, even if resulting from the malfunction of said product.

POTTER warrants that the equipment herein shall conform to said descriptions as to all affirmation of fact and shall be free from defects of manufacture, labeling and packaging for a period of one (1) or five (5) year(s), depending on the product, from the invoice date to the original purchaser, provided that representative samples are returned to POTTER for inspection. The product warranty period is stated on the exterior of the product package. Upon a determination by POTTER that a product is not as warranted, POTTER shall, at its exclusive option, replace or repair said defective product or parts thereof at its own expense except that Purchaser shall pay all shipping, insurance and similar charges incurred in connection with the replacement of the defective product or parts thereof. This Warranty is void in the case of abuse, misuse, abnormal usage, faulty installation or repair by unauthorized persons, or if for any other reason POTTER determines that said product is not operating properly as a result of causes other than defective manufacture, labeling or packaging.

The Aforesaid Warranty Is Expressly Made In Lieu Of Any Other Warranties, Expressed Or Implied, It Being Understood That All Such Other Warranties, Expressed Or Implied, Including The Warranties Of Merchantability And Fitness For Particular Purpose Are Hereby Expressly Excluded. In No Event Shall Potter Be Liable To Purchaser For Any Direct, Collateral, Incidental Or Consequential Damages In Connection With Purchaser's Use Of Any Of The Products Listed Herein, Or For Any Other Cause Whatsoever Relating To The Said Products. Neither Potter Nor Its Representatives Shall Be Liable To The Purchaser Or Anyone Else For Any Liability, Claim, Loss, Damage Or Expense Of Any Kind, Or Direct Collateral, Incidental Or Consequential Damages Relative To Or Arising From Or Caused Directly Or Indirectly By Said Products Or The Use Thereof Or Any Deficiency, Defect Or Inadequacy Of The Said Products. It Is Expressly Agreed That Purchaser's Exclusive Remedy For Any Cause Of Action Relating To The Purchase And/or Use Of Any Of The Products Listed Herein From Potter Shall Be For Damages, And Potter's Liability For Any And All Losses Or Damages Resulting From Any Cause Whatsoever, Including Negligence, Or Other Fault, Shall In No Event Exceed The Purchase Price Of The Product In Respect To Which The Claim Is Made, Or At The Election Of Potter, The Restoration Or Replacement Or Repair Of Such Product.

Potter Electric Signal Company, LLC
13723 Riverport Drive, St. Louis, MO 63043 • 314-595-6900 • 800-325-3936

Table of Contents

Section 1: Introduction 1-1
How to Use this Manual 1-4
Common Terminology 1-4
Section 2: Before You Start Installation 2-5
System Specifications 2-5
Environmental Specifications 2-5
Model / Available Cabinet Colors 2-5
System Configurations / Appliances 2-5
Electrical Specifications 2-6
System Size Specifications 2-6
Main Board Wiring Specifications 2-6
Circuit Separation 2-6
Wiring Types 2-6
Cabinet Dimensions 2-8
Cabinet Mounting Instructions 2-9
Cabinet Wiring Connections 2-10
Wiring Connection Terminal Points 2-11
Battery Circuit Calculations 2-11
Battery Connections 2-13
Section 3: Installation 3-14
Initiating Device Circuit Installation 3-14
Output Circuits Installation 3-15
Output Wiring Characteristics 3-15
Output Maximum Wiring Impedance Formula 3-15
Output Wiring Configuration 3-15
Auxiliary Power 3-16
Relay Output Wiring 3-16
Relay Characteristics 3-16
Class A Expander Installation (CA-4064) 3-17
CA-4064 Class A Expander 3-17
PFC-4410G3 Cabinet 3-17
PFC-4410G3 Main PCA 3-19
CA-4064 Class A Expander 3-19
Configuration Characteristics 3-20
Maximum Wire Resistance Formula 3-20
Addressing P-Link Modules 3-22
P-Link Addresses 3-22
Module Installation 3-23
Initiating Device Circuit Module - IDC-6 3-23
IDC-6 Mounting Location 3-23
IDC-6 Mounting Location 3-23
PFC-4410G3 Cabinet 3-23
Setting Address 3-24
IDC-6 Wiring Configuration 3-24
Remote Annunciators Installation 3-27
Dip Switch 3-27

P-Link Connections 3-27
LED Annunciator Installation (LED-4410G3) 3-28
Relay Board Installation (RLY-5) 3-30
Section 4: Operation 4-31
Control Panel Basic Operation..... 4-31
Section 5: Programming 5-35
Section 6: Programming Options 6-97
Section 7: Communication Options 7-101
Section 8: Appendices A-102
Appendix A: System Maintenance and Testing A-102
Appendix B: Compatibility Table B-103
Appendix C: Compatible Conventional Smoke Detectors & Bases Table C-104
Appendix D: Installation Notes D-107
Appendix E: Operating Instructions for PFC-4410G3 Releasing Panel E-108

Section 1: Introduction

Safety Guidelines

This manual contains safety information that is important to know and understand. This information is provided for the safety of installers, operators, and users of the Potter releasing panel as well as equipment. To help recognize this information, observe the following symbols.

DANGER

Danger indicates an imminently hazardous situation which, if not avoided, WILL result in death or serious injury.

WARNING

Warning indicates a potentially hazardous situation which, if not avoided, COULD result in death or serious injury.

CAUTION

Caution indicates a potentially hazardous situation which, if not avoided, MAY result in minor or moderate injury

NOTICE

Notice indicates important information, that if not followed may cause damage to equipment or property.

⚠ WARNING

The detection and suppression system employing this release panel must be designed by people trained and competent in the design and layout of fire alarm and/or suppression systems for special hazard locations. The system shall be designed and installed in accordance with all local and national codes and ordinances as well as the approval of the Authority Having Jurisdiction. Only trained, qualified and competent individuals should install, program and/or service the PFC-4410G3. Competent people would be aware of these warnings, limitations, and requirements.

An unqualified person is someone who has not received the specific training to perform the tasks set in this manual, is unable to recognize that a hazard exists and how to avoid that hazard, or who has not shown the demonstrated ability needed to install this device. An employee qualified to perform a specific task may be unqualified to perform other tasks. The characteristics of being qualified and unqualified are task-dependent.

NOTICE

The default programming does not allow the abort circuit to abort the release or stop the pre-discharge timer activated by zones programmed as MANUAL RELEASE. This can be changed in the programming to allow MANUAL RELEASE zones to be aborted.

⚠ WARNING

High voltage electrocution hazard. Do not handle live AC wiring or work on the device while AC power is active.

This manual is designed to help with the specification, installation, and programming of the PFC-4410G3 Release Panel. It is imperative that this manual be completely read and understood before the installation or programming of the panel. Save this manual for future reference.

Zones programmed as MANUAL RELEASE will override any cross zoning features. If it is desired to not have a manual station override the cross zoning, program the zone as DETECTION and map accordingly. That detection zone shall have a maximum 30 second pre-discharge time delay

Per ULC requirements; if this equipment is running on battery power only, it will shut off and cease to operate when the battery voltage reaches approximately 19-20 volts.

⚠ CAUTION

Locate the panel and all system components in the following nominal environment:
* Temperature 32-120°F, Humidity 93% non-condensing.
* Verify that the wire sizes are adequate for all initiating, notification, and release circuits.
* Make certain the panel is properly grounded.
* Remove all electronic assemblies prior to any drilling, filing, reaming, or punching of the enclosure. When possible make all cable entries from the sides, bottom, or rear of the cabinet. Verify that they will not interfere with the batteries or other components.
* The panel and system must be tested and maintained in accordance with all local and national codes and ordinances.

NOTICE

Operating Instructions Form

Fill in the name, address and telephone number of the servicing agency on the instruction sheet provided and frame and place adjacent to control panel at eye level.

The following documentation shall be delivered to the owner or their representative upon final acceptance of the system:

- An owners manual and installation instructions covering all system equipment.
- Wiring diagrams
- A detailed description of the programming and operating sequence of the system Cadence and Temporal Patterns
- Programmable to activate on a Supervisory condition

⚠ WARNING

Fire Alarm System Limitations

Smoke detectors may not detect smoke when the smoke does not reach the detector. Such as smoke within walls, on the other side of walls, on other floors, behind closed doors, explosions, etc. Smoke detectors will not operate if they are not properly connected to the fire/release panel. The detectors and bases must be UL listed as being compatible with the panel. The detectors have a visible flashing light that indicates power is supplied to the detectors.

Notification appliances may not alert people if the people are not able to hear or see the appliances such as if they are in separate areas of the building or room.

A fire alarm/release panel will not operate without electrical power. The panel must have sufficient backup battery capability to power the panel for a specified amount of time in the event of an AC power failure. The batteries and release panel shall be tested and maintained in accordance with the testing and maintenance requirements of NFPA 72.
In order for emergency forces, (Fire departments, etc.), to respond to events associated with this panel, the panel must transmit trouble, supervisory, and alarm signals to a monitoring facility either directly or through a main building fire panel.

A problem in an audible or visual device may not be apparent when the panel is in a normal condition.

F.C.C.

This device has been verified to comply with FCC part 15, Class A. Operation is subject to the following conditions:

1. This device may not cause radio interference
2. This device must accept any interference received including any that may cause undesired operation

CAN ICES-001 (A) / NMB-001 (A)

Design Guidelines

People trained in the design of special hazard systems shall determine the selection and placement of the initiating devices and notification appliances connected to the PFC-4410G3. This responsible party shall also be familiar with the premises being protected.

The equipment shall be installed in accordance with the manufacturers instructions, the applicable version of NFPA 72 and all local codes and ordinances. For systems employing cross zoning of two smoke detectors for the activation of the release circuit, this can include but is not limited to the installation of photoelectric and ionization types of detectors on separate zones. One of each type of detector on separate zones shall be installed in the coverage area selected for a single detector (not to exceed 0.7 times the linear spacing). The detectors would be installed in close proximity to each other.

The responsible party shall also determine the theory of operation regarding the programming sequence.

General Description

The Model PFC-4410G3 is a listed and approved, microprocessor based fire control/releasing panel. It is primarily designed for use as a releasing panel for pre-action and deluge, water based extinguishing systems or for agent extinguishing systems. The PFC-4410G3 may also be used as a stand alone fire control panel. This unit shall be installed in accordance with NFPA-12, NFPA-12A, NFPA-13, NFPA-15, NFPA -16, NFPA-17, NFPA-17A, NFPA-72, NFPA-750, NFPA-2001, NFPA 2010 and Canadian Electrical Code Part 1 C22.1, ULC-S524.

The PFC-4410G3 complies with UL Standard 864, ULC S527, FM, CSFM, FDNY, and is RoHS Compliant.

System Features

The PFC-4410G3 has seven (7) conventional programmable initiating zones and is expandable to thirty-one (31) using four (4) IDC-6 cards, each providing six (6) additional programmable input circuits.

- 3.0 Amp (24VDC) power supply
- Four (4) output circuits rated at 3.0A maximum each, 3 Amps total
  - Power Limited
  - Built in Sync
  - Cadence and Temporal Patterns
  - Programmable to activate on a Supervisory or Trouble condition
- Two (2) auxiliary 24VDC Special Application output, rated 19.7-27.2 volts 1A each Power limited, current limited, non-supervised. One programmable, (Resettable for 4-wire smoke detectors), one continuous

  NOTE: Continuous AUX output also serves as P-Link power.

- Support for all major synchronization patterns.
  - Gentex®
  - AMSECO®
  - Wheelock®
  - System Sensor®
- Built in standard program templates in panel memory plus custom programing available
- Releasing Zones can be set up for either normal or cross zoning operation
- Auto Silence and Silence Inhibit.
- Built-in Ethernet port for programming and non-listed communication.
- Built-in Email support to communicate system status and event information.
- Customizable Reminder Emails.
- P-Link RS-485 bus supports system accessories.
- 4,000 event non-volatile history buffer
- 99 Software Zones
- 4 X 20 character LCD display
- Four (4) Form C System Relays (Alarm, Supervisory, Trouble, Waterflow/Releasing) rated 3A at 30 VDC resistive
- Dead-front Cabinet Design

P-Link Accessories

- IDC-6 – Up to four (4) per system that provides six (6) additional conventional Class B inputs or three (3) Class A inputs.
- CA-4064 Class A converter module – Limit of one (1) per system allows for Class A wiring of the P-Link communication bus and the four (4) built-in Output circuits.
- RA-4410G3 Remote Annunciator – Up to 31 per system
- LED-4410G3 Annunciator module – Up to 10 total per system. Each allows for up to 16 zones alarm, supervisory and trouble conditions to display, and five (5) non-programmable system LEDs that display system's overall condition.
- RLY-5 Relay Board module – Up to 31 total per system provides five (5) programmable Form-C relay outputs.
- PSN-1000 Power Supply Expander - The panel can be programmed to support up to one (1) PSN-1000 Power Expanders (installed in a single zone).

Optional Accessories

- CA2Z – Converts Zone 5-6 from Class B initiating device circuits to two Class A circuits. Not to be used for 4-wire smoke detectors unless approved by local AHJ.
- RCDS-PM1 – Provides physical means of disconnecting 1 release circuit in compliance with NFPA 72
- RCDS-PM2 – Provides physical means of disconnecting 2 release circuits in compliance with NFPA 72
- ARM-1 – Activated by 24VDC Indicating and/or Releasing, polarity reversing circuits. The module provides a non-supervised DPDT Relay that can be used for fan shutdown, door release, elevator recall, etc.
- eMatch Protection Assembly 3005020

How to Use this Manual

Refer to this manual before contacting Technical Support. The information in this manual is the key to a successful installation and will assist you in understanding proper wire routing, system requirements, and other guidelines specific to the PFC-4410G3 system.

Common Terminology

The following table provides you with a list of terms and definitions used with the PFC-4410G3 system:

Table 1: Terminology

Term	Definition
PFC-4410G3 Cabinet	Enclosure
EOLR	End of Line Resistor Assembly
EOLD	End of Line Diode Assembly
Remote Annunciator	LCD type Remote Annunciator
Output	Output, Notification Appliance Circuit, Releasing Circuit
P-Link	Proprietary RS-485 communication bus
PFC-4410G3 PCB	Board Assembly for complete unit
RCDS-PM	Release Circuit Disconnect Switch, Panel Mount

Section 2: Before You Start Installation

This section addresses information that will help you in completing a successful installation, such as the PFC-4410G3 cabinet layout, specifications, and environmental considerations.

System Specifications

Cabinet Description

- Eighteen (18) gauge sheet steel with hinged, lockable, removable door and removable full dead-front that can be hung off the bottom of the cabinet when servicing
- Enclosure dimensions – 18-1/2" x 14-1/4" x 4-3/4"

Visual Indicators

- 4 x 20 alphanumeric character display showing applicable condition, status, and circuit for all alarm, supervisory, and trouble conditions
- 37 LED indicators (Red, Green, Amber)

LCD Description

- Alarm, Supervisory and Trouble conditions display applicable condition, status and circuit for each correlating condition
- Provides menu driven programming information

Environmental Specifications

- Mount indoors only.
- Temperature 32° to 120°F, humidity 93% non-condensing.
- Verify panel is properly grounded.
- Remove all electronic assemblies prior to any drilling, filing, reaming, or punching of the enclosure. When possible, make all cable entries from the sides, bottom, or rear of the cabinet. Verify that they will not interfere with the batteries or other components.
- The panel and system must be tested and maintained in accordance with all local and national codes and ordinances.
- Panel shall be installed so the display is easily readable and the door shall have adequate clearance to access the controls.

Model / Available Cabinet Colors

- 3006735 – RED PFC-4410G3 Conventional Releasing Panel

System Configurations / Appliances

Table 2: System Configurations / Appliances

Model	Description	Local	Remote Station	Central Station	Releasing Service
PFC-4410G3	Main Board/Panel Assembly	Y	Y	Y	Y
CA-4064	Class A Expander	O	O	O	O
RA-4410G3	Remote annunciator.	O	O	O	O
PSN-1000	Intelligent Power Supply Expander	O	O	O	O
CA2Z	Class A Expander	O	O	O	O
IDC-6	Initiating Device Circuit	O	O	O	O
LED-4410G3	LED Annunciator	O	O	O	O
RLY-5	Relay Expander	O	Y	Y	O
3005013	End of line resistor assembly	Y	Y	Y	Y
3005012	End of line resister and diode	N	N	N	Y
EOLP-D	End of Line Plate f/Diode Assy	O	O	O	O
EOLP-R	End of Line Plate f/Resistor	O	O	O	O

Y = Yes, required for applicable section
N = No, not required for applicable section
O = Optional, may or may not be used, has no affect on the applicable section.

Electrical Specifications

Please refer to the table below for electrical specifications:

Table 3: System Panel Electrical Specifications			
Panel	**# Outputs**	**Rating per Output**	**Class**
PFC-4410G3	4 Outputs	3.0 Amps	Inputs – Class A* or B Outputs – Class A* or B P-Link – Class A* or B All are Low Voltage and Power Limited

*With optional equipment

System Size Specifications

Please refer to the table below for system size specifications:

Table 4: System Size Specifications	
Accessories/Subassemblies	**Maximum System Size**
PFC-4410G3	• Seven (7) input circuits on the main board • Four (4) output circuits on the main board* • One (1) auxiliary power output* • One (1) P-Link connection* • One (1) P-Comm (ethernet)
Note: The Outputs, P-Link and AUX Out combined are **not** to exceed 3.0A. The P-Link 24VDC and AUX Out each are not to exceed 1.0A.	

Main Board Wiring Specifications

There are several wiring requirements to consider **before** connecting circuits to the main board: (1) the circuit separation, and (2) wiring types. All wiring should be sized and installed to comply with NFPA 70, NFPA 72, and local codes and ordinances.

Circuit Separation

Proper separation between the different types of circuits must be maintained between Power Limited, Non-Power Limited, and High Voltage wiring to reduce electrical interferences, transient voltage or voltage ratings.

- Separations between the different wiring types **must** be maintained by at least ¼ inch and the wire insulation **must** be for the higher voltage.
- The control panel cabinet has sufficient knockouts located around the periphery allowing the installer to maintain separation between power limited and non-power limited connections.
- Refer to table 5 for wiring types and Figure 1 wire routing diagram

Wiring Types

Wiring specifications must be followed to prevent damage or other consequences.

Refer to table below for a breakout of the different wiring requirements shown by circuit type:

Table 5: Main Board Circuit Wiring Types		
	Wiring Type	
Type of Circuit	**Voltage**	**Power**
AC Connection	High Voltage	Non-Power Limited
Battery Connection	Low Voltage	Non-Power Limited
Input Circuits	Low Voltage	Power Limited
Notification Appliance Circuits (Output)	Low Voltage	Power Limited
P-Link/Connection	Low Voltage	Power Limited
AUX Power	Low Voltage	Power Limited

Figure 1. PFC-4410G3 Wire Routing

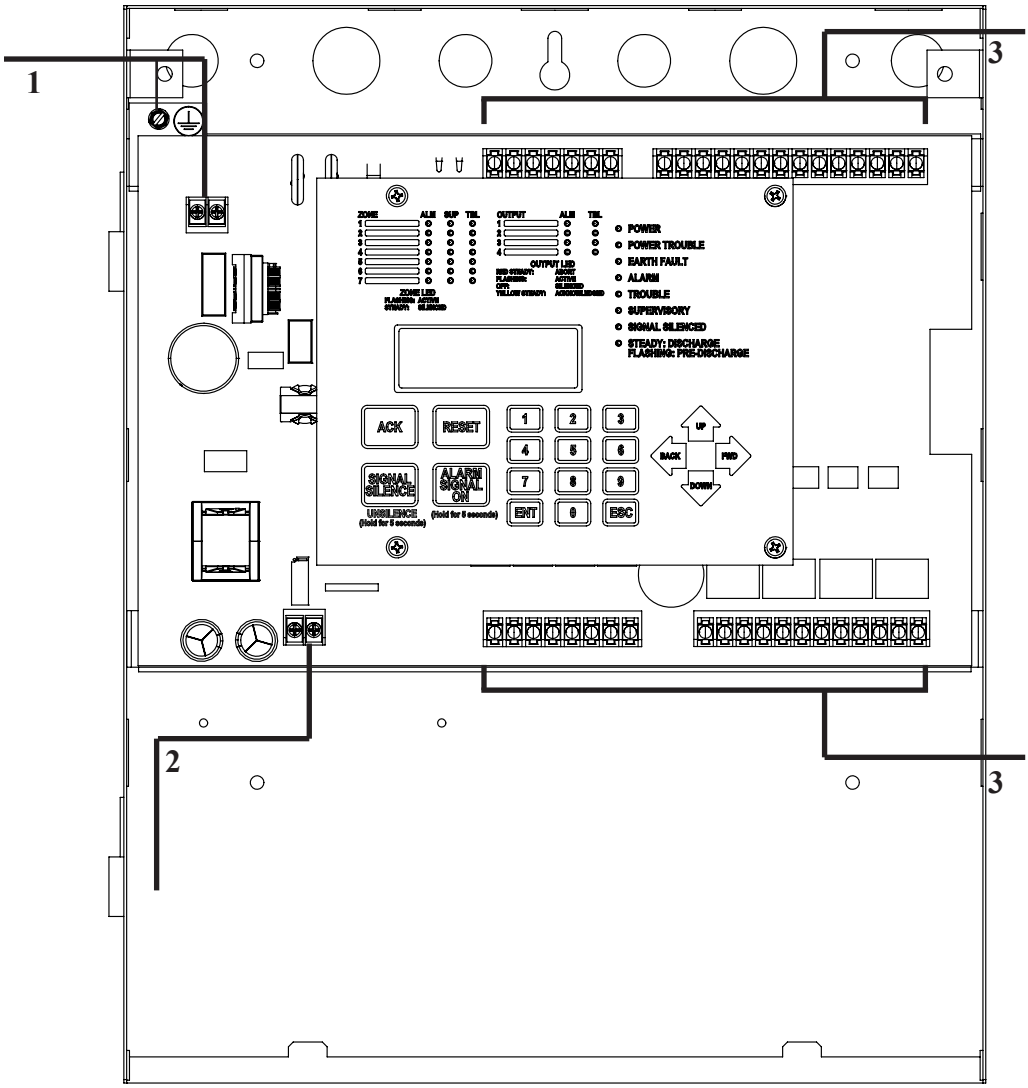

1. AC Power Leads
2. Battery Leads
3. Route all wiring away from AC power wiring and from non-power limited wiring such as battery leads. Use cable clamps if necessary (not included).

Cabinet Dimensions

Figure 2. PFC-4410G3 Cabinet Dimensions

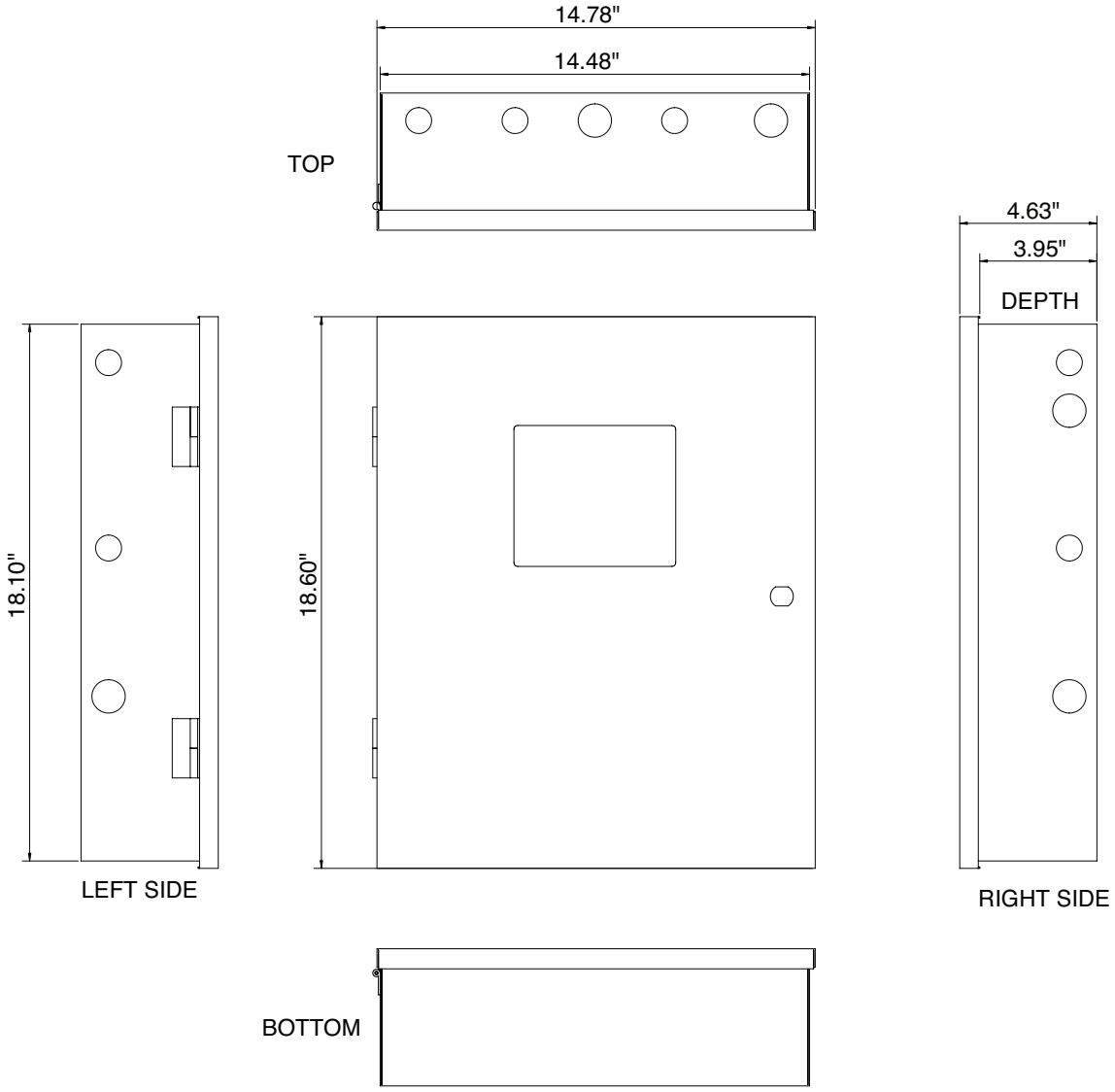

Figure 3. PFC-4410G3 Panel Showing Bezel Dimensions

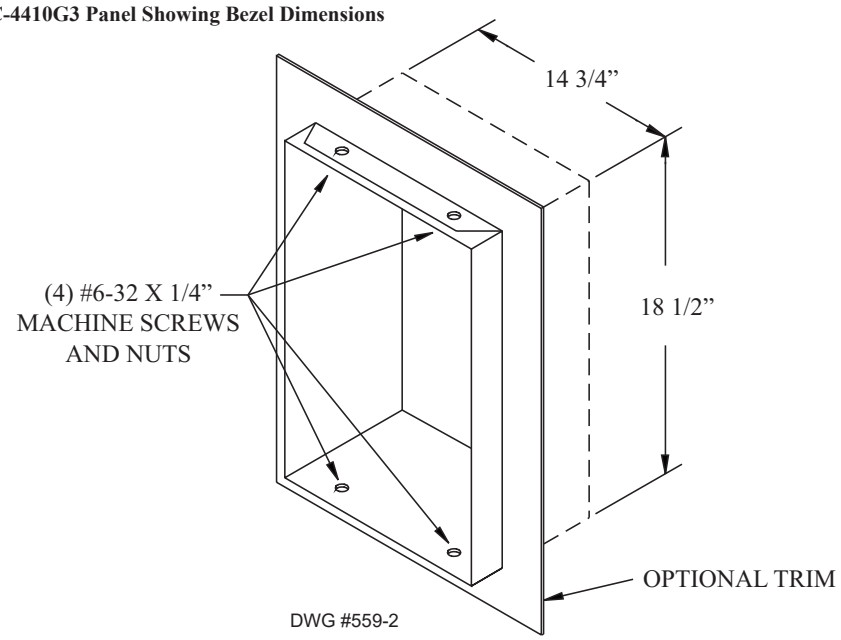

Cabinet Mounting Instructions

To mount the cabinet:

1. The unit should be mounted in a convenient location, approximately 5 feet from the floor where it will be accessible for testing and servicing.
2. The main circuit board module should be removed before attempting to mount the cabinet. Remove deadfront. Disconnect the AC power from TB1. To remove the module, remove the four corner screws and two bottom center screws (see 12 on Fig. 4) holding the main PCA assembly to the cabinet. Remove the module and set aside (refer to appendix D)
3. The PFC unit may be surface mounted or semi-flush mounted using the optional trim bezel (*refer to Fig.3*). For semi-flush installations mount the housing so that the front edge protrudes 1" from the finished wall surface. After all conduits and wiring are in place and the wall surface is completely finished, slide the trim bezel in place and fasten with 4 #6-32 x 1/4" machine screws and nuts.
4. Install all required conduits, external wiring and points and make all connections that are external to the panel. Replace the module. With the AC power still turned off at the circuit breaker panel, connect the AC line and neutral to terminal block TB1. Connect ground wire to the green ground screw on bracket. See all indicated locations on Fig. 4 *PFC-4410G3 Cabinet Wiring* on page 2-10.
5. Connect all the other wiring to the terminals as shown in the connection drawings. Turn the AC power on and connect the standby batteries with the cable provided, polarity must be observed.
6. Replace dead front panel and secure with mounting screws.
7. Verify the operation of the complete system as outlined in the test procedure section.

Cabinet Wiring Connections

Figure 4. PFC-4410G3 Cabinet Wiring --

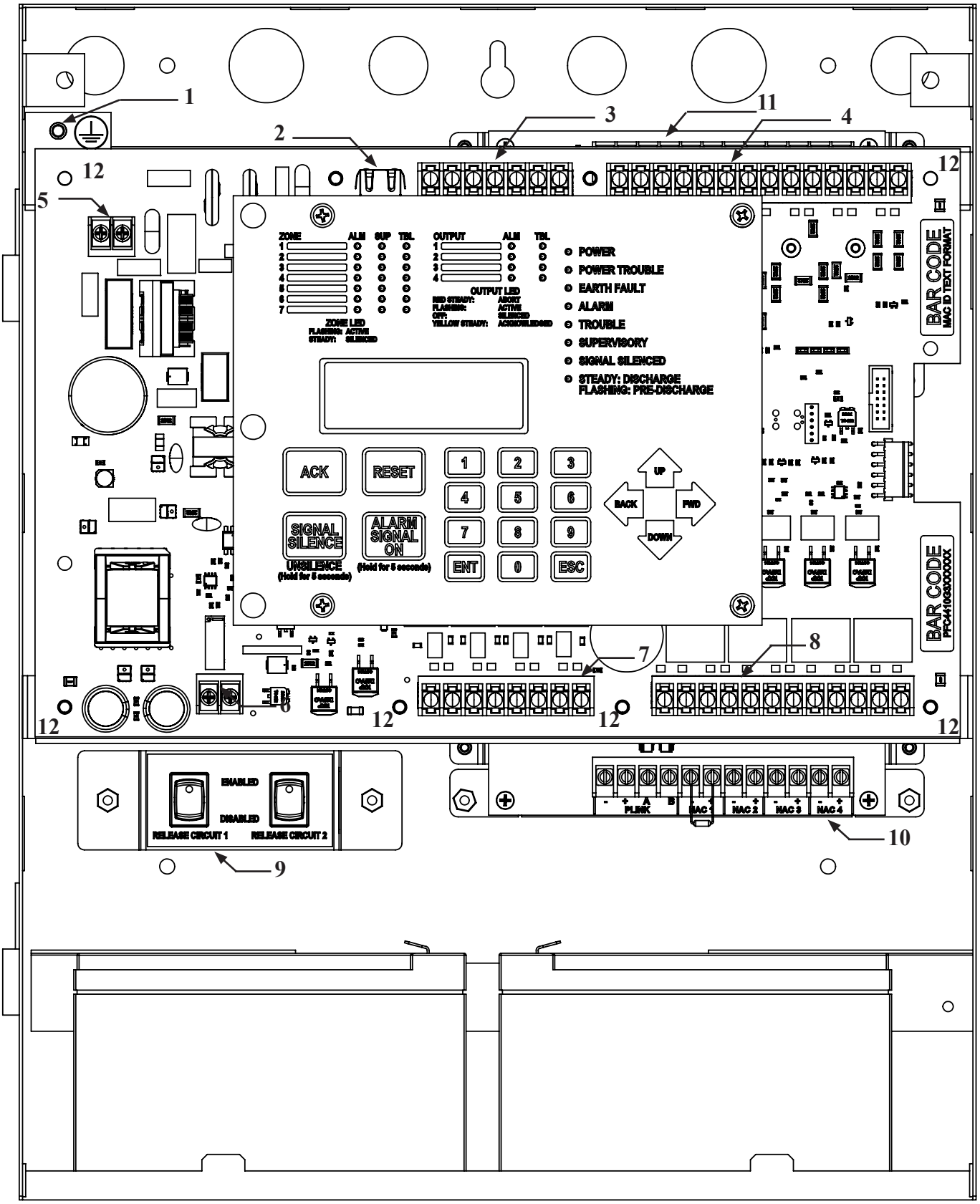

Wiring Connection Terminal Points

1 - Earth Ground

2 - Ethernet Connection

3 - P-Link, AUX power, power limited

4 - Initiating Device Circuits, power limited

5 - AC Supply 120-240 VAC 50/60 Hz

6 - Battery Connection

7 - NAC output circuits, power limited

8 - Relay Contacts to power limited circuit, 30 VDC @ 1A max

9 - RCDS-PM (optional)

10 - CA-4064 Zone Expander (Optional)

11 - IDC-6 Initiating Device Circuit Expander (Optional)

Mounting Hardware

12- PFC-4410G3 PCB Mounting Screws

Battery Circuit Calculations

Before selecting the battery, it is important to determine the minimum size batteries for standby and alarm times desired for each application. If the wrong batteries are installed in a specific application or incorrect current draw used, the proper standby and minimum alarm time will not be present.

The battery circuit is rated for 8 to 55 AH batteries and shall be sized to operate the panel for at least 24 hours in standby and 5 minutes in alarm per NFPA 72, (30 minutes in alarm for ULC). The cabinet will house up to two (2) 12 AH batteries. Larger batteries can be installed in SSU-00500 Battery Cabinet (1000015). Please use the battery calculation worksheet to calculate the battery size and current draw required for each application. The worksheet includes a 20% efficiency factor as required by NFPA 72.

Battery Calculation Worksheet

Description	Quantity	Standby (mA)	Total Standby (mA)	Alarm (mA)	Total Alarm (mA)
Main board (PFC-4410G3)	1	100	**100**	215	**215**
RA-4410G3		20		30	
CA2Z for Zones 5 & 6		5		20	
CA-4064 Class A Expander		15		60	
PSN-1000 Power Expander		15		15	
LED-4410G3 P-Link Current LED-Current (if applicable, see Note 5)		31 15		35 210	
RLY-5 Relay-Current (if applicable, see Note 5)		25 10		35 135	
IDC-6		20 30		20 323	
AUX					
P-Link					
Output 1					
Output 2					
Output 3					
Output 4					
		Total (ma)		Total (ma)	
		Convert to Amps	x 0.001	Convert to Amps	x 0.001
		(*Refer to maximum allowable standby current) Total A:		Total A:	
		Multiply by standby hours required. Typically 24 hours for UL/ULC and 90 hours for FM	x____	60 minutes per hour Alarm time (minutes) *Example:* UL 5 minute alarm: enter 12 FM 10 minute alarm: enter 6 ULC 30 minute alarm: enter 2	÷ ____
		Total Standby AH		Total Alarm AH	
				+Total Standby AH	
				Total AH	
				Efficiency Factor	÷ 0.80
				Required AH	

*Maximum Allowable Standby Current

	24-Hour Standby Time	
	UL	ULC
8AH	0.16A	0.10A
12AH	0.29A	0.23A
18AH	0.49A	0.43A
33AH	0.99A	0.93A
55AH	1.72A	1.67A

Important Notes:

1) FACP enclosure can house up to two (2) 12 AH batteries. Larger batteries require accessory cabinet enclosure. Part number 1000015/SSU00500
2) NFPA 72 requires 24 hours of standby power followed by 5 minutes of alarm activation (30 minutes of alarm activation for ULC). FM and others may require 90 or more hours of standby.
3) Door holder circuits configured to disconnect upon AC loss need not be included in the battery standby calculation since they will not draw power during that time. Door holders will contribute to standby current draw when AC is present.
4) Total current must not exceed power supply rating (3A on PFC-4410G3).
5) Attached P-Link and AUX OUT devices must be accounted for in the battery calculation for the supplying source.
6) Mark the purchase date on the batteries. Test batteries at least semi annually in accordance to the test methods in NFPA 72 or battery manufacturers instructions. Replace batteries if they fail the test or within 4 years of purchase date.

Main Supply Circuit

The AC terminals are located in the upper left hand portion of the main board. The main board supervises the main AC power and provides indication that the AC power is absent. The terminals are rated at 120/240 VAC 50/60 Hz and are labeled "AC POWER" on the board.

Figure 5. PFC-4410G3 AC Terminals

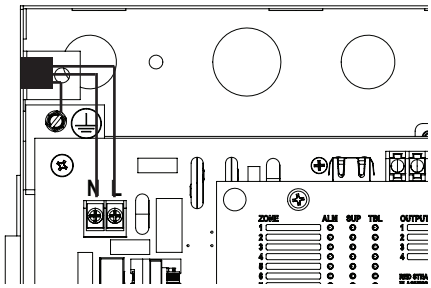

The earth ground connection is marked as " ⏚ " and is separate from the two terminals for Line (L) and Neutral (N) connections.

The AC input power rating is: Maximum of 3.0A at the nominal 120/240V VAC rating.

Battery Connections

The battery charging circuit is located on the main panel in the lower left portion of the board. The battery charging current is 1.0 amp typical; the charging voltage is approximately 27.3 VDC and is supervised.

Note: The battery should be clearly labeled as *"Sealed Lead Acid Battery"* or equivalent UL listed or UL Recognized.

Connect the battery wire leads to the terminal connections, as shown, observing proper polarity

Figure 6. PFC-4410G3 Battery Connections

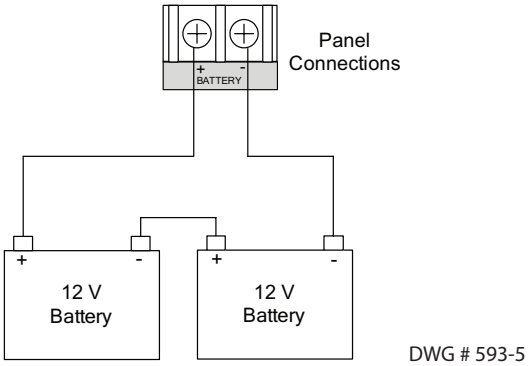

Section 3: Installation

This section covers how to install Input Circuits (IDCs), Notification Appliance Circuits (Outputs) and P-Link modules. Wiring requirements and configuration examples are included throughout this section. Please read this section carefully before installing detectors and accessories to insure proper installation.

Initiating Device Circuit Installation

The panel is equipped with seven (7) programmable contact inputs or Initiating Device Circuits (IDC). They are power-limited and supervised. All inputs are suitable to monitor 2-wire smoke detectors. Smoke detectors shall be installed in compliance with NFPA 72. Inputs can also be used for automatic, manual, waterflow or supervisory service.

Input Wiring Specification

- Maximum short circuit current = 47 mA
- Maximum wiring resistance = 100 Ohms except Linear heat detection cable, 700 ohms per zone
- Maximum wiring capacitance = 30 uF
- Maximum wire length in feet = 10,000 feet
- Normal standby current = 2.5 mA
- Normal standby voltage = 15-29V

IDC Wiring Configuration

Figure 7. IDC Class B Wiring Example

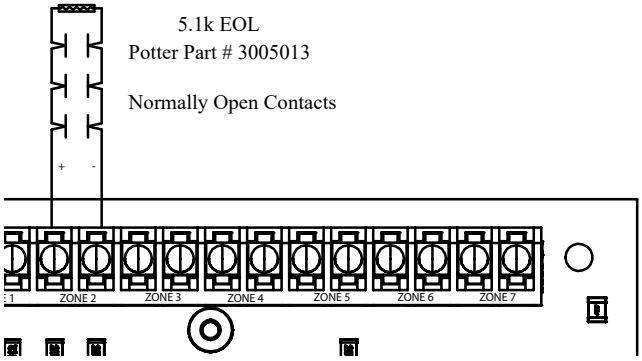

Notes:

1. The Potter part number for the listed end of line assembly is #3005013 EOL Resistor Assembly.
2. The panel has ground fault detection on the input circuits. The impedance to ground for ground fault detection is 0 ohms.
3. The end of line resistor is a 5.1K ohm resistor.

Output Circuits Installation

There are four (4) Output circuits provided on the PFC-4410G3, each rated 3.0 amps continuous at 24VDC. The Output circuits may be configured for Class A or Class B. Class A wiring requires a Class A expansion board (CA-4064). Outputs may be programmed to provide steady (constant) voltage, a cadence pattern, releasing service or synchronized strobes. Full synchronization is maintained system-wide. The Outputs may be programmed as silenceable or non-silenceable.

An Output can be programmed for continiuous power while the panel is not in an Alarm condition, such as required for energizing a Door Holder. The Output is considered a special application type, with a maximum output current of 3A.

Output Wiring Characteristics

- Output is supervised and regulated.
- Circuit is power limited.
- Maximum Output current is 3.0 Amps

Note: Type of Output is selectable, and may be configured for strobe synchronization with Gentex®, AMSECO®, Wheelock®, or System Sensor®. Refer to the listing of compatible devices located in the *"Output Compatibility Document"*, Potter #*5403592*, for this information.

Output Maximum Wiring Impedance Formula

The maximum impedance is a *function* of the *load* placed on the circuit. To calculate the maximum line current impedance, use the following formula:

(Alarm Current of Notification Appliance) x (Wire Resistance) < 3.0 Volts

Output Wiring Configuration

Figure 8. Output Class B Wiring Example

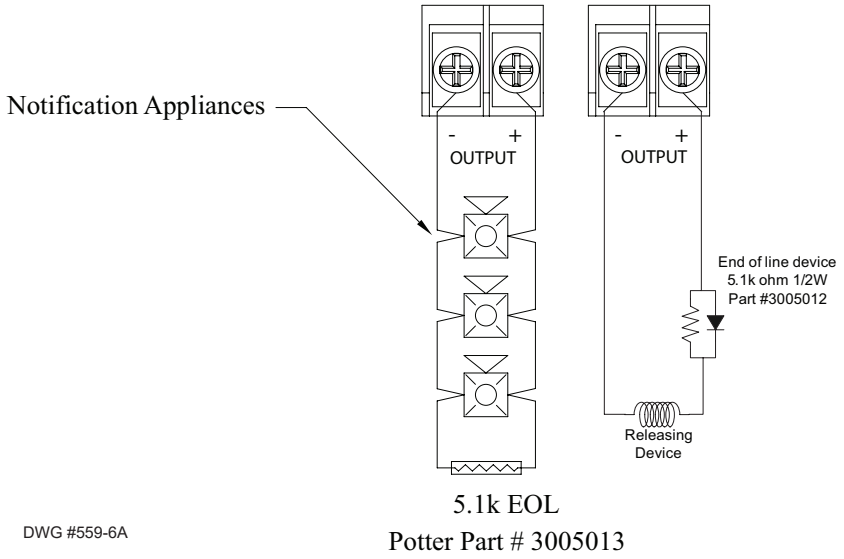

Notes:

1. The Potter part number for the listed end of line assembly is #3005013 EOL Resistor Assembly.
   Note: When a NAC is used as a releasing circuit, a Potter End of Line Diode (EOLD) assembly must be installed. The EOLD is Potter part number 3005012 and must be installed in accordance with the installation manual
2. The panel has ground fault detection on the Output circuits. The impedance to ground for ground fault detection is 0 ohms.

Figure 9. Class A Output Wiring Example (Requires the CA-4064 Expansion Board)

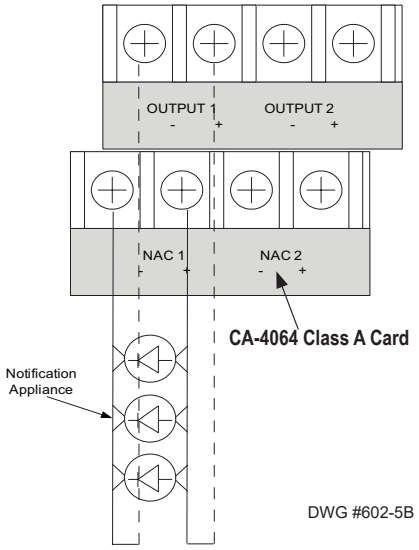

Auxiliary Power

The Auxiliary Power is a Class B 24 VDC special application output rated at a maximum of 1.0 Amp. The auxiliary power may be programmed as continuous or resettable 24VDC power.

Aux Power Characteristics

- The impedance to ground for ground fault detection is 0 ohms.
- Supervised and power-limited.
- Circuit is provided with battery back-up.
- 19.7-27.2 V
- Resettable for 4-wire smoke detectors

Figure 10. Auxiliary Connections Example

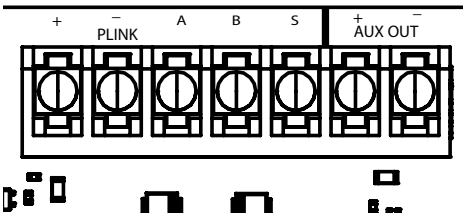

Relay Output Wiring

The panel has four (4) form C system relays: alarm, trouble, supervisory and waterflow. The trouble relay is a fail safe relay that changes position anytime a trouble condition occurs.

Relay Characteristics

- Relays have a contact rating of 3.0 A at 30 VDC Resistive.
- All wiring between relays and the remote device shall be limited to same room installation.

Figure 11. Relay Output Wiring

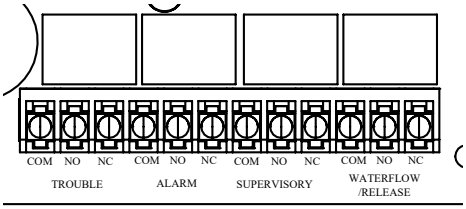

Class A Expander Installation (CA-4064)

Class A wiring configurations require the use of the CA-4064 expander board. Once the card is installed, the CA-4064 provides the return terminals for Outputs and P-Link devices. Refer to the figures below for examples of installing and wiring a Class A expander card.

Figure 12. Example of a Class A Expander Cards Shown Installed

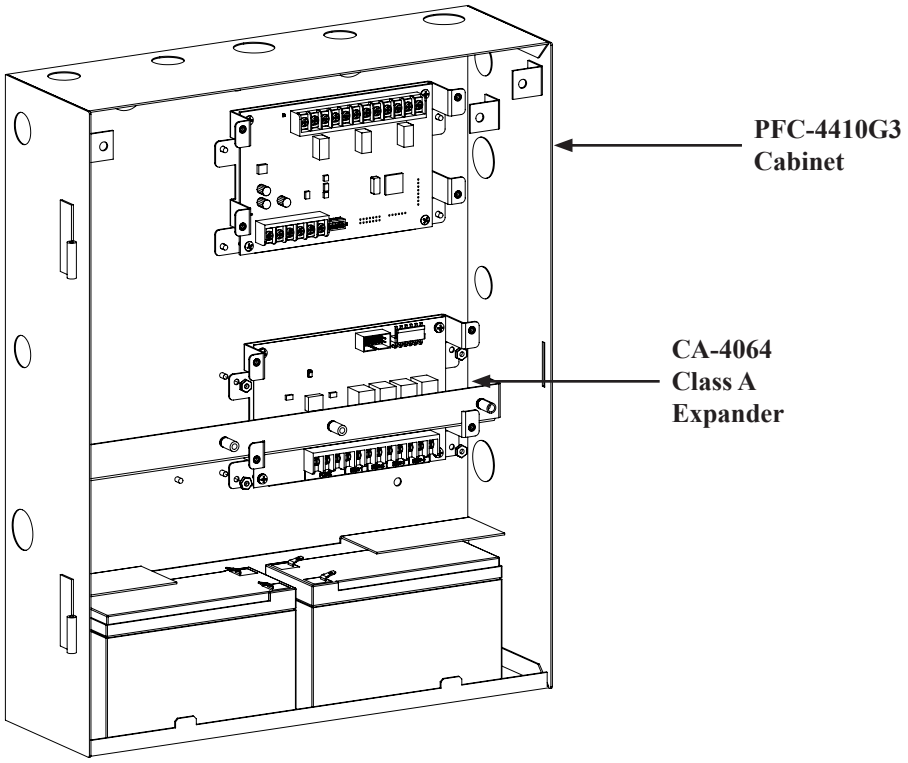

Figure 13. Example of Installing and Wiring a Class A Expander Card

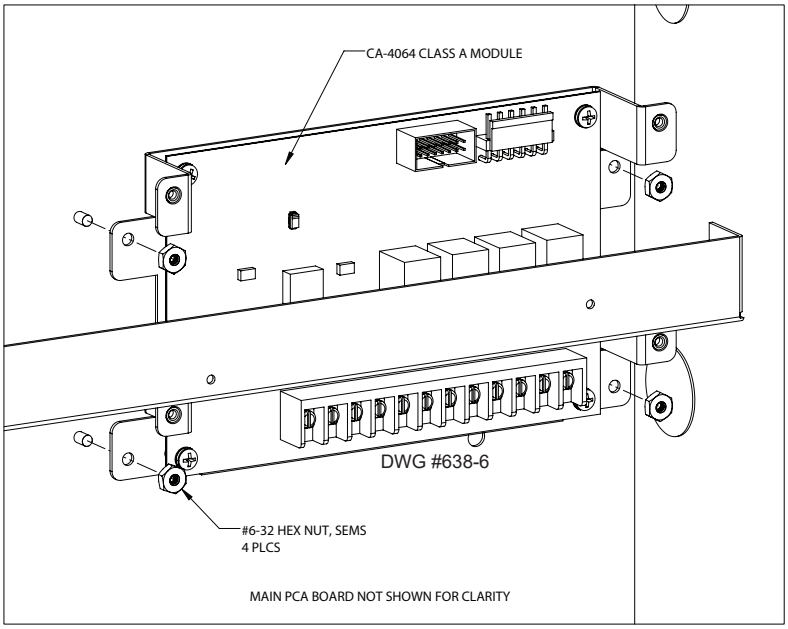

Figure 14. Installed Class A Card

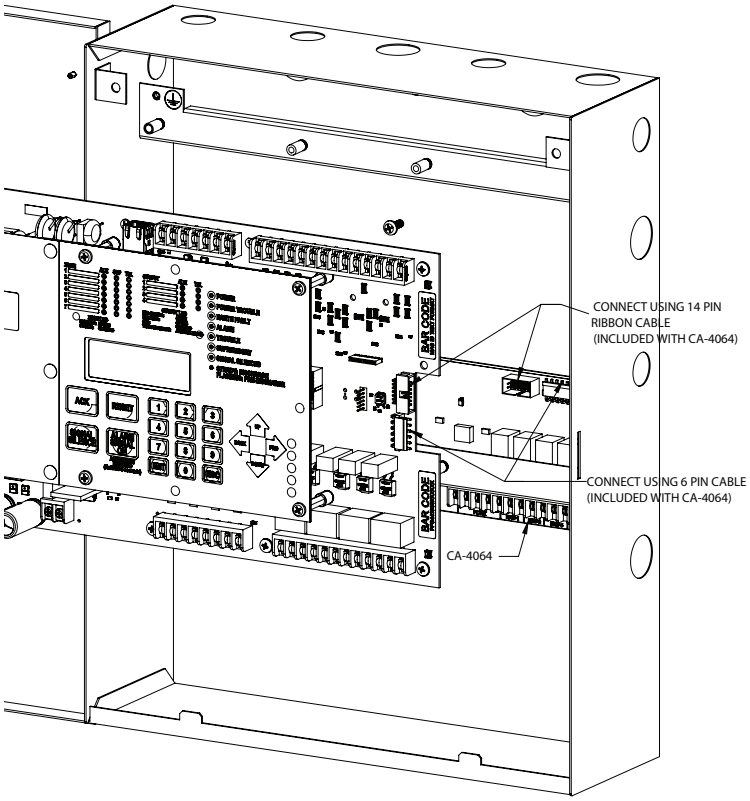

Figure 15. Example of CA-4064 Module Installed Behind Main PCA

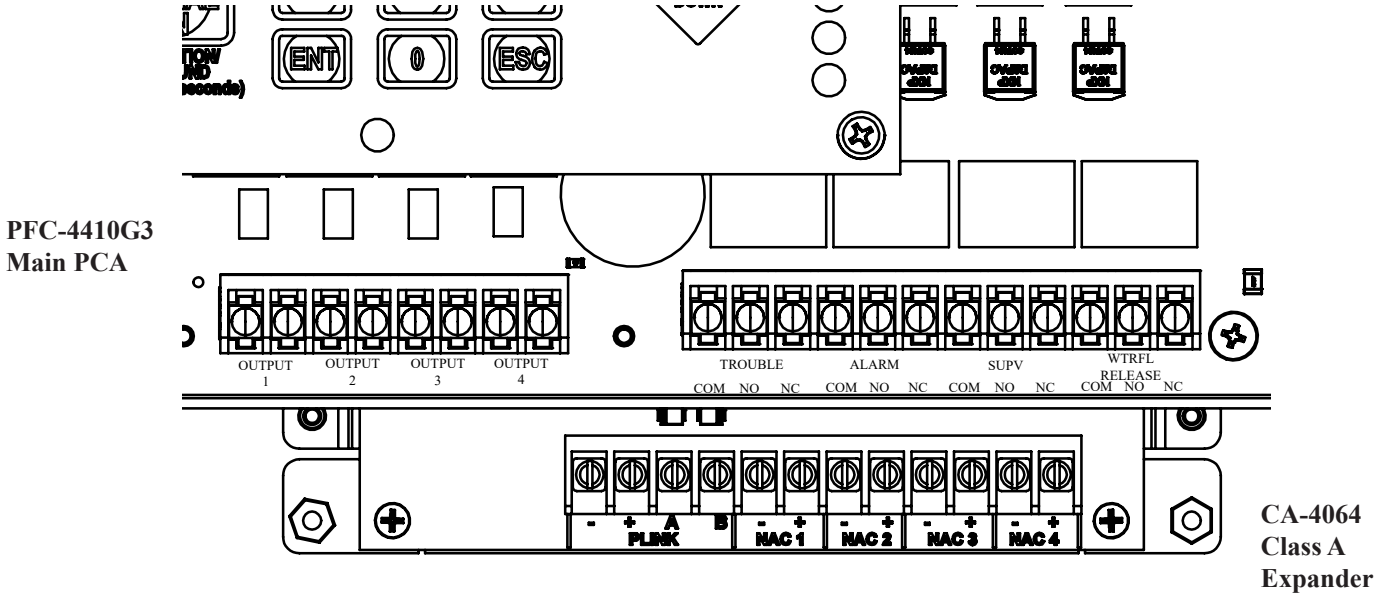

Figure 16. Example of Output Wiring for CA-4064 and Class A P-Link Wiring

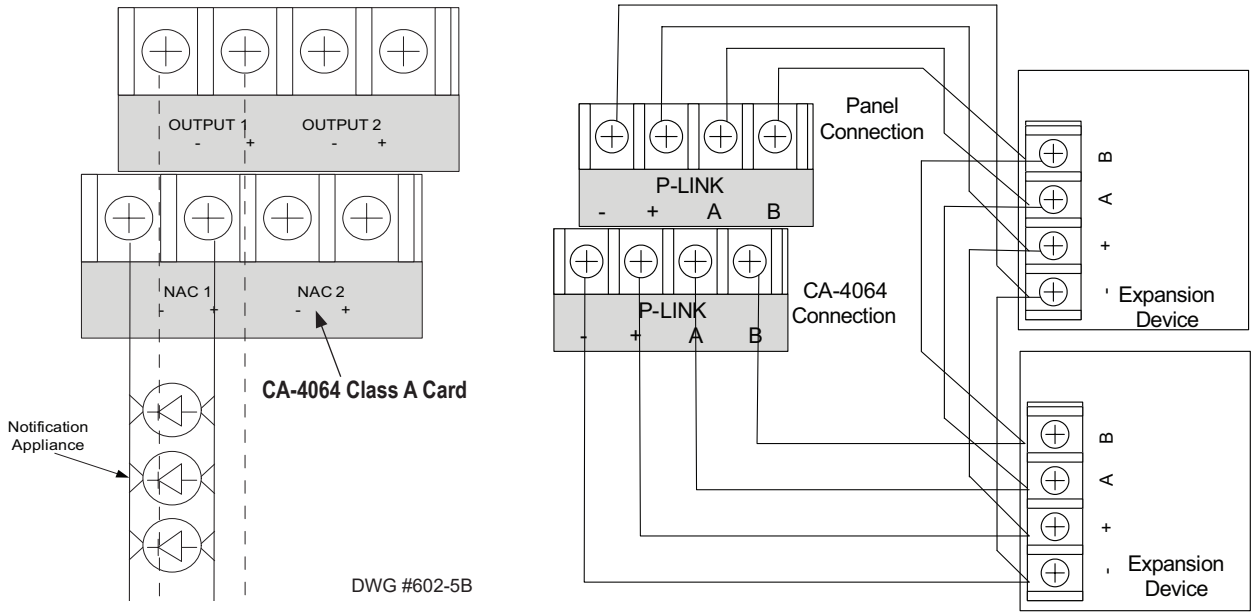

Installation Notes:

1. One (1) CA-4064 Class A expander may be installed per panel.
2. The CA-4064 provides the terminals for Outputs and P-Link.

P-Link Modules

P-Links modules such as the IDC-6, remote annunciators, and relay expansion boards (RLY-5) are connected to the main control panel utilizing the four-wire P-Link bus for power and communication. This panel supports a maximum of thirty-one (31) P-Link modules, which can be connected using a Class B or Class A wiring *(examples are provided throughout this topic).*

Note: P-Link Class A wiring requires the installation of a Class A Expander board (CA-4064). Instructions on installing the CA-4064 are included in this section.

Configuration Characteristics

- P-Link maximum current is 1A.
- P-Link voltage rating is 16VDC - 27.2VDC Continuous
- P-Link circuit is supervised and power-limited.
- The maximum wire length is 6,500 feet.

Maximum Wire Resistance Formula

The maximum resistance is based on the *load* placed on the circuit. To calculate the maximum wire resistance, use the following formula:

(Total P-Link Devive Current) x (Wire Resistance) < 3 Volts

The worst case P-Link current draw cannot exceed the 1 amp. P-Link wiring gauges and lengths are calculated using the worst-case current draw values from the table below. The worst case current draw numbers are used only for wiring calculations, refer to the battery calculation worksheet for normal standby and alarm currents.

Table 6: P-Link Accessories Worst Case Current Draw (mA)

P-Link Accessory	Worst Case Current Draw (mA)
PSN-1000	15
LED-4410G3	35
RLY-5	35
RA-4410G3	30
IDC-6	20

Figure 17. P-Link Device Class B, Wiring Example

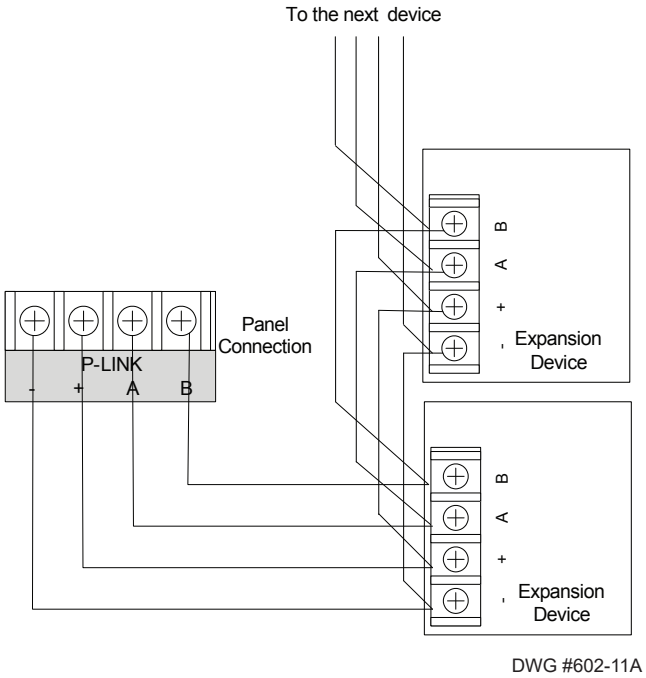

Figure 18. P-Link Device Class A Wiring Example (Requires CA-4064)

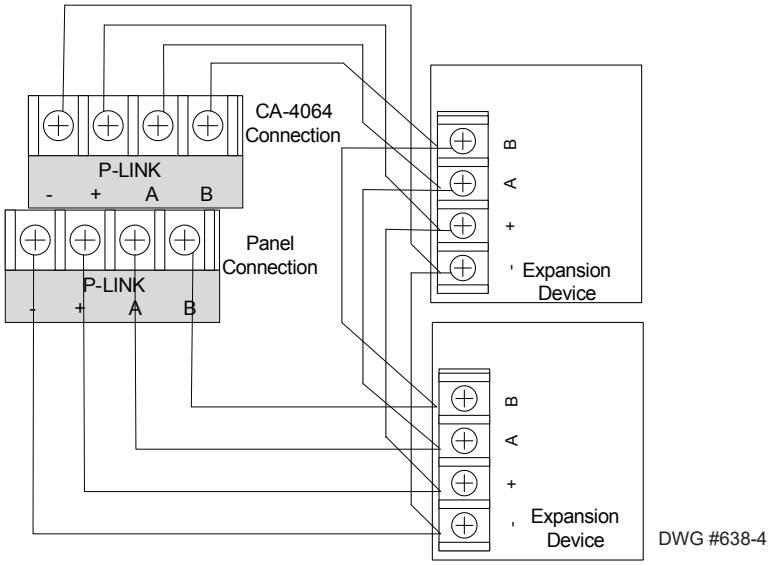

Addressing P-Link Modules

P-Link modules' addresses are set by changing the dip switches located on each device.

P-Link Addresses

Every P-Link device has a five position dip switch which is used to program the device address ranging from one (1) to thirty-one (31). Use the table below to reference Dip Switch Settings:

Address	Dip Switch Settings				
	SW-1	SW-2	SW-3	SW-4	SW-5
1	On	Off	Off	Off	Off
2	Off	On	Off	Off	Off
3	On	On	Off	Off	Off
4	Off	Off	On	Off	Off
5	On	Off	On	Off	Off
6	Off	On	On	Off	Off
7	On	On	On	Off	Off
8	Off	Off	Off	On	Off
9	On	Off	Off	On	Off
10	Off	On	Off	On	Off
11	On	On	Off	On	Off
12	Off	Off	On	On	Off
13	On	Off	On	On	Off
14	Off	On	On	On	Off
15	On	On	On	On	Off
16	Off	Off	Off	Off	On

Address	Dip Switch Settings				
	SW-1	SW-2	SW-3	SW-4	SW-5
17	On	Off	Off	Off	On
18	Off	On	Off	Off	On
19	On	On	Off	Off	On
20	Off	Off	On	Off	On
21	On	Off	On	Off	On
22	Off	On	On	Off	On
23	On	On	On	Off	On
24	Off	Off	Off	On	On
25	On	Off	Off	On	On
26	Off	On	Off	On	On
27	On	On	Off	On	On
28	Off	Off	On	On	On
29	On	Off	On	On	On
30	Off	On	On	On	On
31	On	On	On	On	On

Note: When assigning dip switch addresses, each device must have a unique number within each device type group. For example, a group of LCD annunciators may be assigned 1-10, and PSN-1000 power expansion boards may also be assigned 1-10.

Module Installation

Initiating Device Circuit Module - IDC-6

The panel supports up to four (4) IDC-6 modules. The IDC-6 is controlled over the 4 wire P-Link connection. The IDC-6 mounts in the panel cabinet (up to two (2)) as shown below. It also can be mounted in the AE-2, AE-8 or AE-14 accessory cabinets..

Note: When using an accessory cabinet, the cabinet MUST be mounted within 20 feet of the panel or power supply

Figure 19. IDC-6 Module locations

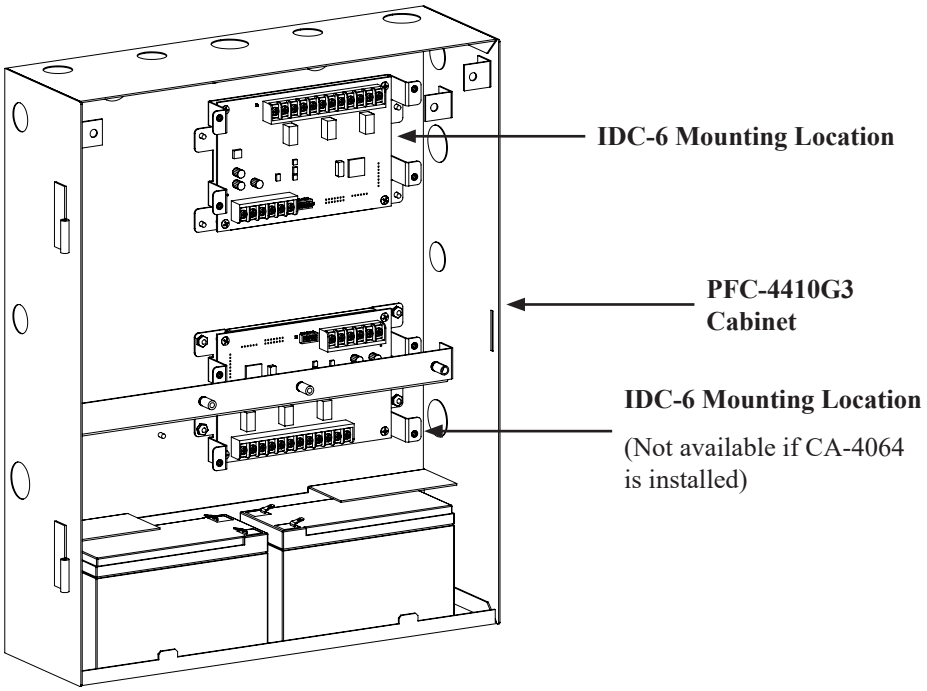

Setting Address

The IDC-6's address is set by **dip switch S1** (*as shown below*). The address must be set in the range of one to thirty-one (1–31) to be recognized by the panel. (*Refer to the "P-Link Addresses" table shown earlier in this section for DIP switch programming.*)

Figure 20. IDC-6 Dip Switch locations

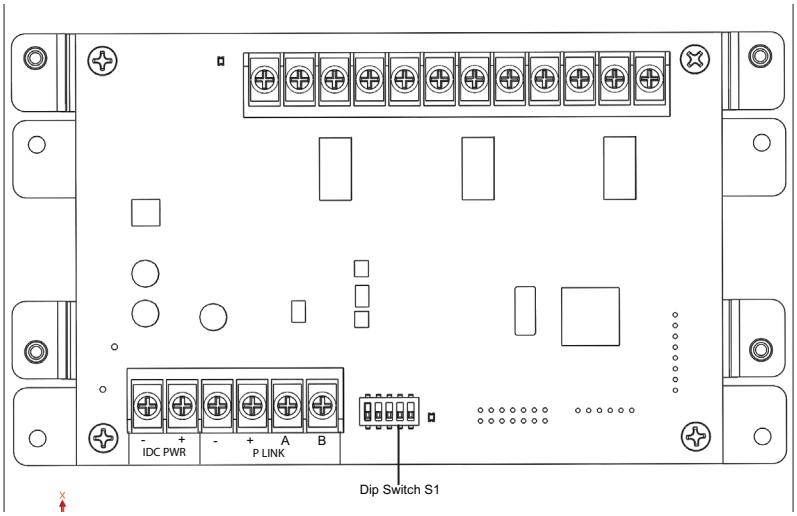

Input Wiring Specification

- Maximum short circuit current = 47mA
- Maximum wiring resistance = 100 Ohms
- Maximum wiring capacitance = 1 mF
- Maximum wire length in feet = 10,000 feet
- Normal standby current = 2.5 mA
- IDC operating voltage range = 15VDC – 28VDC

IDC-6 Wiring Configuration

The IDC-6's may be configured and installed as Class B or Class A. Please refer to the following examples:

Figure 21. Example of IDC-6 Class A Wiring

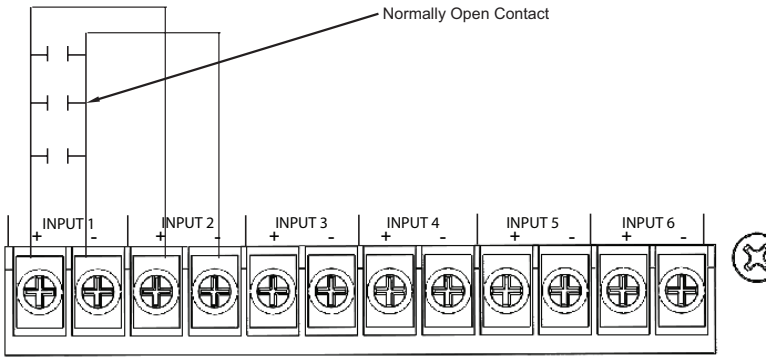

Input Circuit Class A Notes:

1. Maximum wiring resistance must not exceed 100 ohms.
2. The input has ground fault detection with 0 ohm impedance to ground.

Figure 22. Example of IDC-6 Class B Wiring

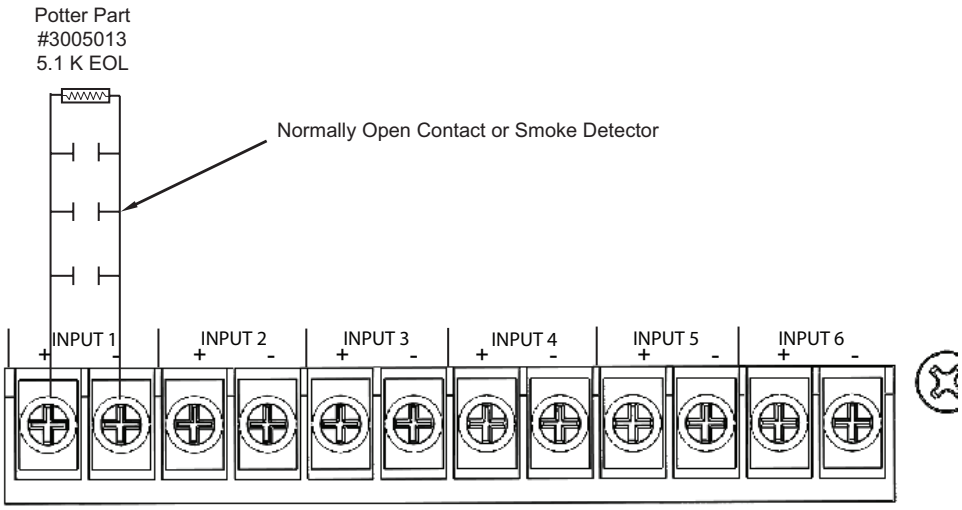

Input Circuit Class B Notes:

1. Maximum wiring resistance must not exceed 100 ohms.
2. The input has ground fault detection with 0 ohm impedance to ground.
3. The Potter part number for the listed end of line assembly is #3005013 EOL Resistor Asssembly.

IDC PWR can be provided by any listed source

Figure 23. Class B P-Link and IDC Power Wiring

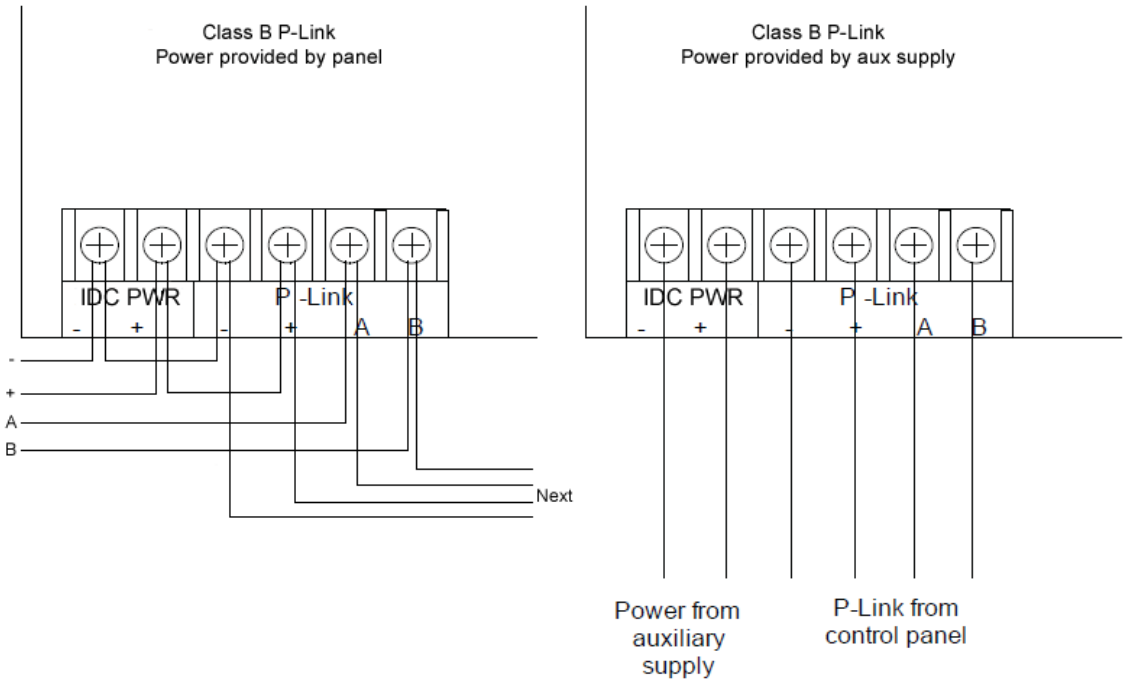

Figure 24. Class A P-Link and IDC Power Wiring

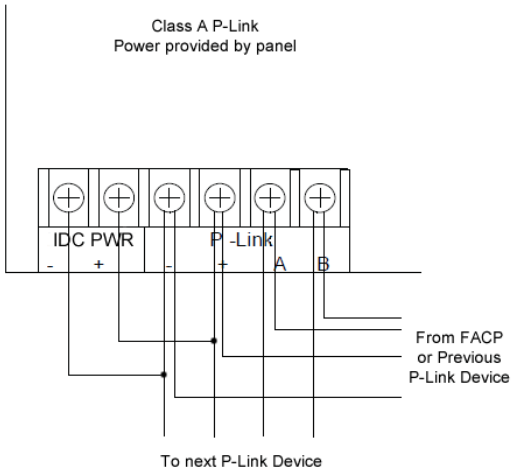

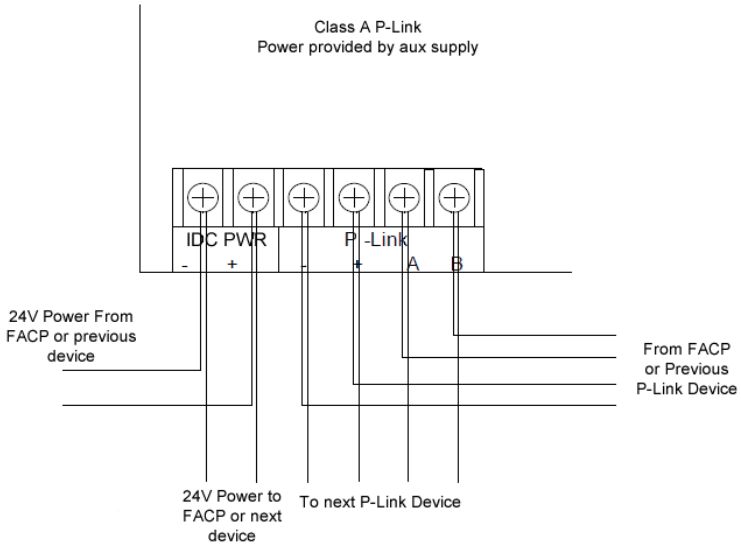

Remote Annunciators Installation

Up to 31 RA-4410G3 annunciators can be connected to the PFC-4410G3. The RA-4410G3 provides the same user interface including the same LED and LCD display and keypad as the main panel.

Setting Addresses

An annunciator's address is set by **dip switch S21**, which is located on the back of the annunciator. The address must be set in the range of one to thirty one (1–31) to be recognized by the panel. *(Refer to the "P-Link Addresses" table)*

Figure 25. Annunciator Back Panel View

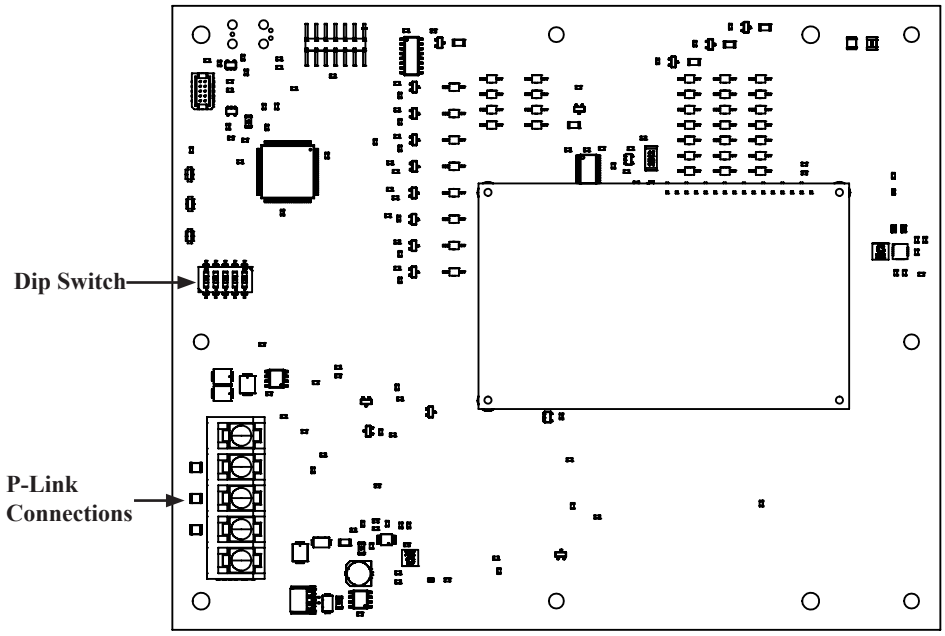

LED Annunciator Installation (LED-4410G3)

The panel supports up to ten (10) LED-4410G3 Annunciators.The LED-4410G3 displays alarm, supervisory, and trouble conditions for up to16 zones per annunciator. They also provide *Local Silence and Lamp Test* functionality. Blank zone labels are provided for use with the LED annunciators to label each zone name or identifier. The labels may be printed or written on the supplied card-stock, and then inserted into the back of the front panel as shown in the right-most figure below.

Figure 26. LED-4410G3 Module Showing Front Panel & Board

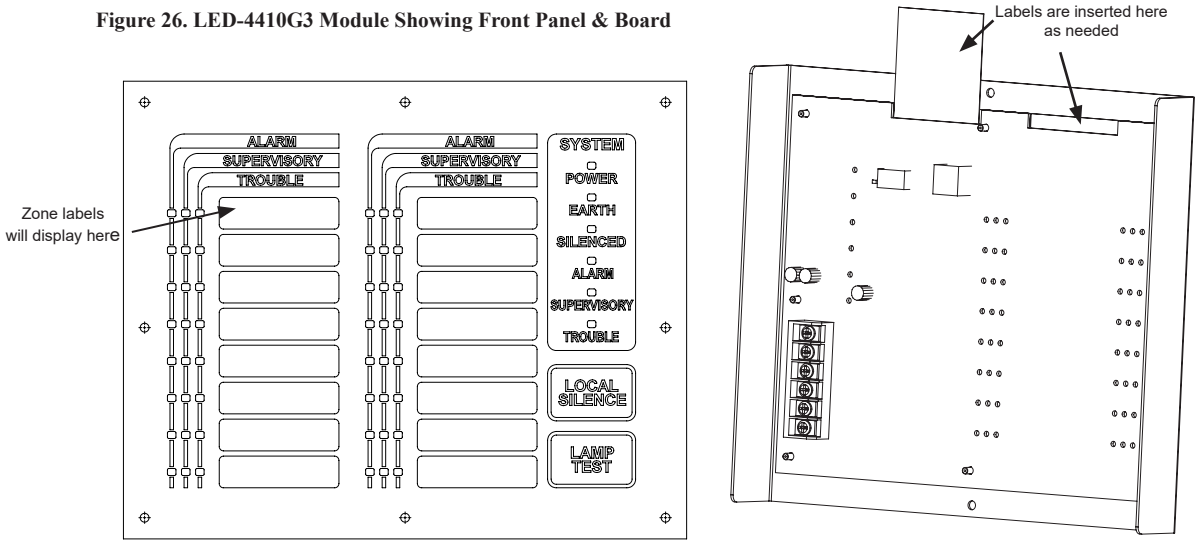

DWG # FIG 2 DWG #608-5

The LED-4410G3 is controlled over the 4-wire P-Link connection. The higher current required for the LED outputs can be provided by the panel, or from an auxiliary power source as shown below. The auxiliary power can be any 24VDC source, and is fully supervised.

Figure 27. Examples of Wiring LED-4410G3 Module to Control Panel or Auxiliary Power Supply

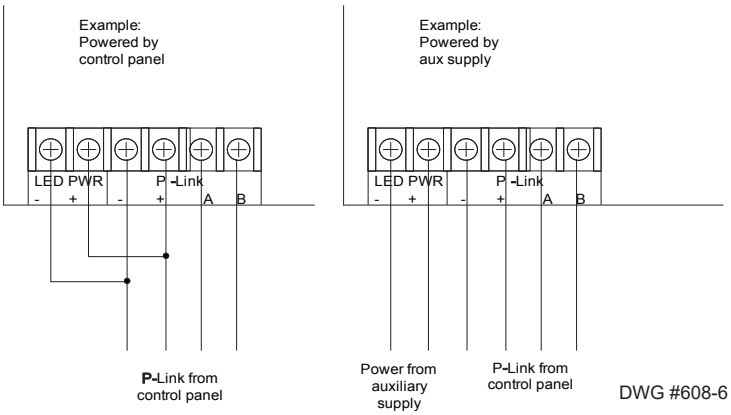

DWG #608-6

Setting Addresses

The LED-4410G3 address is set by **dip switch S1.** The address must be set in the range of one to thirty-one (1–31) to be recognized by the panel. *(Refer to the **"P-Link Addresses" table**)*

Figure 28. LED-4410G3 Panel Showing Dip Switch Location

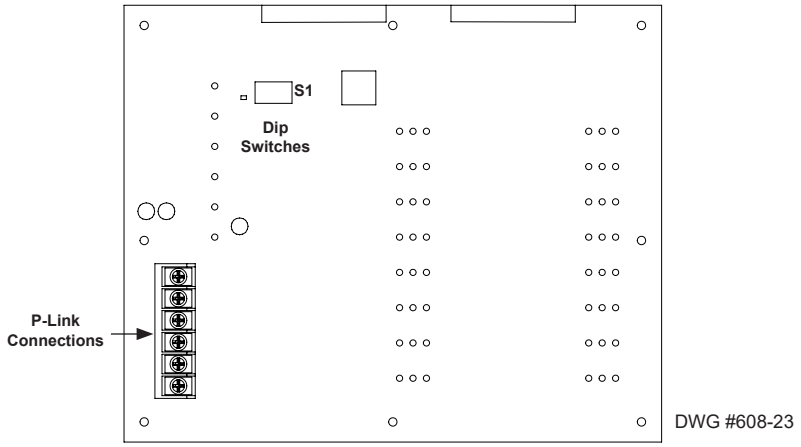

Relay Board Installation (RLY-5)

The panel supports up to thirty-one (31) RLY-5 (Relay Board) modules. Each RLY-5 provides 5 programmable output relays, which can be individually mapped to any zone. The RLY-5 is controlled over the 4-wire P-Link connection. The RLY-5 mounts in a mounting bracket as shown below, and then installed into the panel cabinet, or in either of theAE-2, AE-8 or AE-14 accessory cabinets.

Figure 29. RLY-5 Board Showing Mounting Bracket

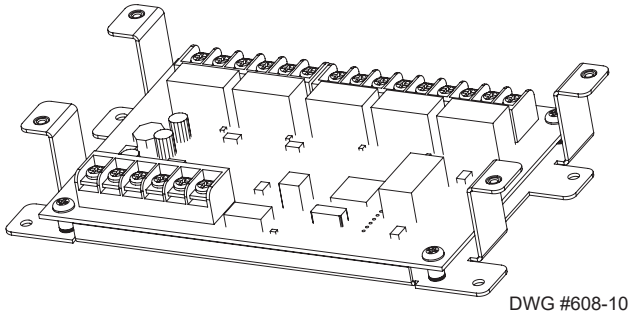

The RLY-5 higher current required for the relay outputs can be provided by the panel, or from an auxiliary power source as shown below. The auxiliary power can be any listed 24VDC source, and is fully supervised.

Figure 30. RLY-5 Wiring to Control Panel /Auxiliary Power Supply Examples & RLY-5 Showing Normally Open/Normally Closed Contacts

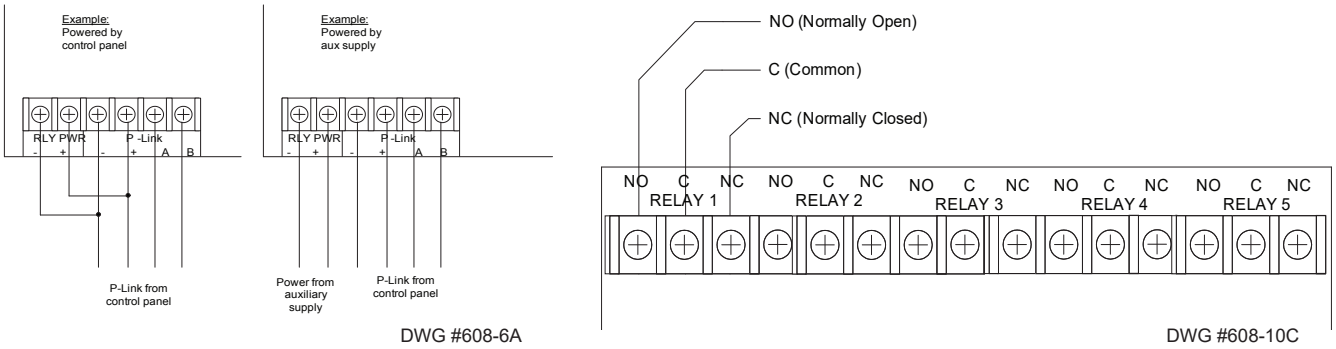

Setting Addresses

The RLY-5's address is set by **dip switch S1**. The address must be set in the range of one to thirty-one (1–31) to be recognized by the panel. *(Refer to the "**P-Link Addresses" table**)*

Figure 31. Relay Board Panel View Showing Dip Switch Location

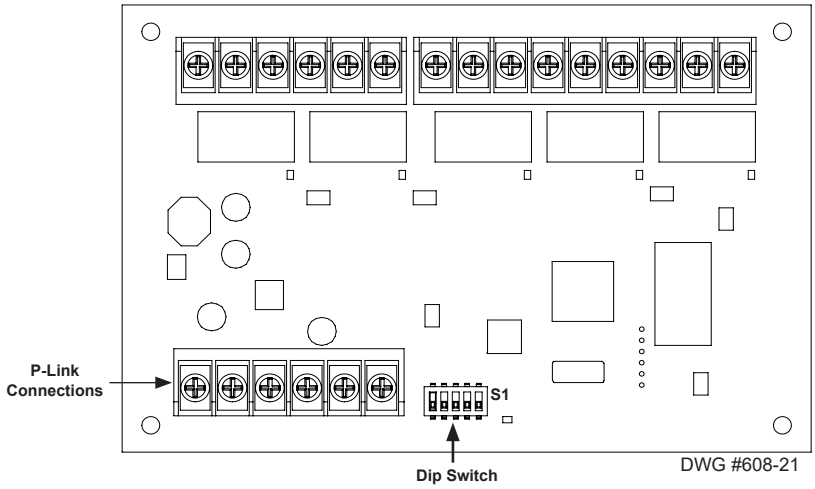

Section 4: Operation

This section provides an overview of the control panel's basic operations, which includes the status LEDs, function pushbuttons, and a Control Panel Menu Tree quick reference sheet.

Control Panel Basic Operation

The control panel is comprised of a four (4) line x 20-character LCD display panel, arrow keys, push button function keys, status LEDS, and the numeric keypad. A description of each component is included in this section; please refer to the figure shown below.

Figure 32. PFC-4410G3 Control Panel Display

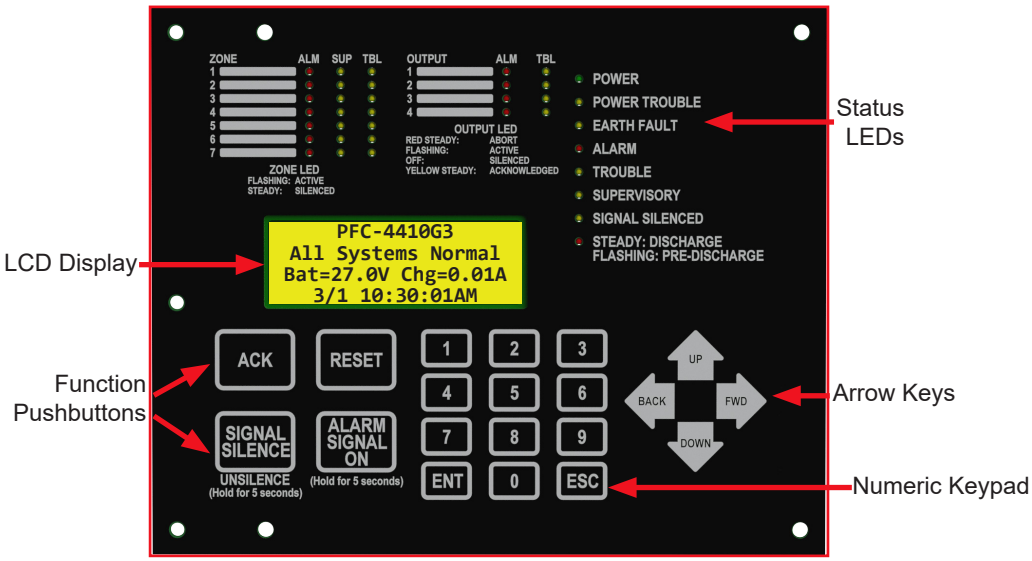

Note: Authorized system operators must use a key to open the outer door of the cabinet.

LCD Display

The LCD panel displays the standard *Start-up menu* as shown below. The LCD displays up to eighty (80) characters of information, providing important feedback to system users, *i.e., system messages, status information, trouble conditions, or input changes*. The LCD also provides access to the Main Menu for daily system operations and specific programming functions.

Figure 33. LCD Start-Up Screen

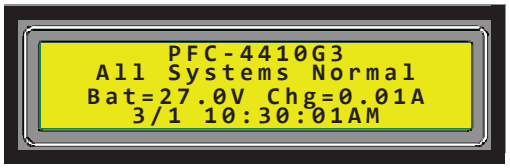

Note: You may customize the Start-up screen to display a specific job site name or other relevant descriptive text.

- LCD brightness adjustment: Press ZERO and FWD ARROW will increase LCD brightness after reaching full brightness LCD will go to its lowest setting and continue increasing.

Menu Navigation Keys

The **arrow keys** allow you to scroll or move through the control panel menus. The **Ent** and **Esc** keys may also be used to navigate through menus; they are located on the numeric keypad. The table shown below provides a summary of the navigation keys.

Table 7: Menu Navigation Keys

Push button	Description
UP DOWN	Moves/scrolls up or down through menus and events
FWD BACK	Scrolls to the left or right to display details, if any, of current menu item. **Note:** When the LCD panel displays a LEFT and/or RIGHT arrow, this indicates more information may be viewed.
ENT	Displays the Main Menu or selects the current menu option. **Note:** The blinking **"→"** indicates the current menu option.
ESC	Returns to previous menu or backs up to previous screen.

Numeric Keypad

The numeric keypad allows you to enter user codes when required to access restricted functions. Alternatively, the numbers may be used to quickly select menu options vs. using the arrow and Ent keys to select a function.

Figure 34. Control Panel Numeric Keypad

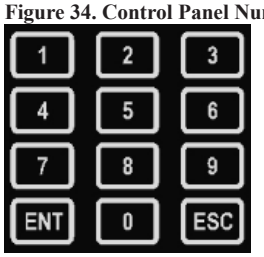

Function Pushbuttons

The four (4) function push buttons are used when system alarm / trouble conditions occur. Refer to the table below for a brief summary of the pushbuttons:

Table 8: Control Panel Pushbuttons

Pushbutton	Description
ACK	Press to *acknowledge* the currently displayed condition. The panel buzzer will automatically silence after all trouble and supervisory events have been acknowledged
SIGNAL SILENCE	Press to *silence* all outputs programmed as *silenceable* and buzzer. Press and hold for 5 seconds to Unsilence outputs.
RESET	Press to *reset* panel to *normal condition*.
ALARM SIGNAL ON	Press and hold for 5 seconds to activate alarm signal output circuits Note: Alarm signal activation does not activate outputs classified as second alarms.

Status LEDs

The control panel's LEDs communicate system conditions by illuminating and/or flashing the applicable **green**, **red** or **amber** indicators. These are described in the table below.

Figure 35. Control Panel System Status LEDs

Table 9: System Status LEDs

LED Type	LED Color/Action	Description
POWER ON	Steady Green	AC Power is Present **Note:** If AC power is absent for more than 5 seconds, LED will extinguish.
POWER TROUBLE	Flashing Amber	Flashes to indicate loss of or low AC power or battery trouble
EARTH FAULT	Flashing Amber	A ground fault is present.
ALARM	Flashing Red	An alarm device is active.
ALARM	Steady Red	All alarm conditions have been silenced
TROUBLE	Flashing Amber	A fault condition is present
TROUBLE	Steady Amber	All fault conditions have been acknowledged
SUPERVISORY	Flashing Amber	A Supervisory condition is present
SUPERVISORY	Steady Amber	All supervisory conditions have been acknowledged
SIGNAL SILENCED	Flashing Amber	An activated Output has been silenced
DISCHARGE	Steady Red	Release output has been activated
PREDISCHARGE	Flashing Red	Predischarge timer is counting down to discharge/release

Figure 36. Control Panel Zone / Output Status LED

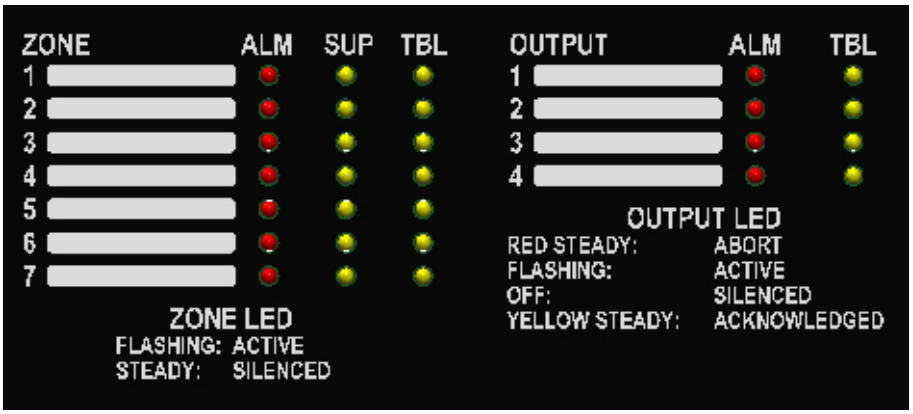

Table 10: System Status LEDs		
LED Type	**LED Color/Action**	**Description**
TBL	Flashing Amber	Fault condition present
TBL	Steady Amber	Fault condition acknowledged
SUP	Flashing Amber	Supervisory condition present
SUP	Steady Amber	Supervisory condition acknowledged
Zone ALM	Flashing Red	Alarm zone active
Zone ALM	Steady Red	Alarm zone silenced
Output ALM	Flashing Red	Output active
Output ALM	Steady Red	Output aborted **Available in Agent Release Mode only*

Section 6: Programming Options

The control panel can be configured using the on-board keypad or PC based programming tool. The panel stores the site specific configuration data in non-volatile memory.

NOTICE TO USERS, INSTALLERS, AUTHORITIES HAVING JURISDICTION, AND OTHER INVOLVED PARTIES

This product incorporates field-programmable software. In order for the product to comply with the requirements in the Standard for Control Units and Accessories for Fire Alarm Systems, UL 864 and ULC S527, certain programming features or options must be limited to specific values or not used at all as indicated below.

Topic	Feature or Option	Permitted in UL (Y/N)	Possible Settings	Setting(s) Permitted in UL864 / S527	Comment
Misc	Idle LCD Message	Y	Yes/No	All Settings Allowed	
Misc	Display Events	Y	Initial Event Newest Event	Initial Event	Auto display first event
Misc	Waterflow Delay	Y	0-255 Sec	0-90 sec	
Misc	AC Report Delay	Y	0 Minutes, 5-30 Hours	1-3 Hours	
Misc	Door Holder Low AC Dropout Delay	Y	No delay, 15 Sec, 1 minute, 5 minute	All Settings Allowed	
Misc	Strobes Active When Silenced	Y	Yes/No	All Settings Allowed	
Misc	Disable 24 hours PZT Resound	Y	Yes/No	No	
Misc	Display AM/PM	Y	Yes/No	All Settings Allowed	No = 24hour clock
Misc	Synchronize to Network Time	Y	Yes/No	All Settings Allowed	
Misc	SNTP Server	Y	North-America.Pool.NTP.org	All Settings Allowed	
Misc	Time Zone	Y	24 Time Zone Selections	All Settings Allowed	
Misc	DST Enabled	Y	Yes/No	All Settings Allowed	
Misc	DST Start	Y	Month/Day	All Settings Allowed	
Misc	DST End	Y	Month/Day	All Settings Allowed	
Zone	Zone Style	Y	Alarm Supervisory Waterflow Trouble Releasing Releasing Confirmation Unused System Alarm System Supervisory	All Settings Allowed	
Zone	Silenceable	Y	Yes/No	All Settings Allowed	
Zone	Silence Inhibit	Y	0-60 minutes	All Settings Allowed	
Zone	Auto Silence	Y	3-360 minutes	3-60 UL864 S527 (see comment)	Shall be set in accordance with section 3.2.4.6 of the National Building Code of Canada
Zone	Auto Unsilence	Y	0-60 minutes	All Settings Allowed	

Topic	Feature or Option	Permitted in UL (Y/N)	Possible Settings	Setting(s) Permitted in UL864 / S527	Comment
Zone	Restore Delay	Y	0-300 Sec	Full range allowed	Delay to reactivate devices that turn off on troubles or alarm on panel restoration to normal
Zone	Latching	Y	Yes/No	All Settings Allowed	
Zone	Output Pattern	Y	Constant ANSI Temp 3 March Code Double Time	All Settings Allowed	
IDC	Dry Contact Input Functions	Y	Unused Detection Waterflow Linear Heat Manual Release Smoke Detector Heat Detector Input Abort Low Air Alarm Supervisory Valve Tamper Low Air Supervisory High Air Supervisory Remote Reset Remote Silence Valve Reset Release Confirmation	All Settings Allowed Exception: Remote reset, remote silence and valve reset functions allowed when used with a keyed switch. Abort & Release Confirmation: Available in Agent Release Mode only. Abort on a water-based extinguishing system is not a UL Listed function.	Applies to built in IDCs and optional IDC-6
Outputs	Function	Y	General Purpose AMSECO Sync Gentex Sync System Sensor Sync Wheelock Sync Door Holder Output Door Holder Low AC Drop Release Supervisory Unused Alarm Indicating Trouble Normally Energized Release Pulse Reset Pulse First Alarm Second Alarm		Specifies use of Output circuit(s)
AUX PWR	Function	Y	Constant Output Resettable Output	All Settings Allowed	
E-Mail	Email Status Reports	N	Alarms Troubles Supervisory Test History & Status Reports		

Topic	Feature or Option	Permitted in UL (Y/N)	Possible Settings	Setting(s) Permitted in UL864 / S527	Comment
Releasing	Abort Type	Y	**Mode 1- IRI:** Abort must be activated before pre-discharge timer starts	Yes	Abort has no affect after second alarm is received by the panel. Requires cross zoning. Not repeatable. Does not abort manual release.
			Mode 2-ULI: Stops Predischarge timer at 10 seconds while abort circuit is active.	Yes	If less than 10 seconds is remaining, the timer restores to 10 seconds. Deactivating Abort circuit starts timer at 10 seconds. Repeatable..
			Mode 3 - NYC One time operation that adds 90 seconds to time remaining on discharger when activated	No	Predischarge timer stops at time remaining plus 90 seconds while abort is active.This abort is not repeatable
			Mode 4 -AHJ: Stops Predischarge timer at 30 seconds while abort circuit is active.	No	If less than 30 seconds is remaining, the timer restores to 30 seconds. Deactivating Abort circuit starts timer again. Repeatable.
			Mode - 5 PRA Post Release Abort. Used after the release circuit has activated.	No	De-energizes the release circuit, allowing the suppression agent to stop discharging without resetting the panel Abort circuit maybe on zone 2-7
			Mode - 6 IRI & PRA Provides both the IRI abort mode and the PRA abort mode	No	Requires 2 abort inputs to operate. IRI abort shall be on Zone 1. PRA may be on Zone 2-7.
			Mode 7 - ULI & PRA Provides both the ULI abort mode and the PRA abort mode	No	Requires 2 abort inputs to operate. ULI abort shall be on Zone 1. PRA may be on Zone 2-7.
			Mode 8 - NYC & PRA Provides both the NYC abort mode and the PRA abort mode	No	Requires 2 abort inputs to operate. NYC abort shall be on Zone 1. PRA may be on Zone 2-7.
			Mode 9 - AHJ & PRA Provides both the AHJ abort mode and the PRA abort mode	No	Requires 2 abort inputs to operate. AHJ abort shall be on Zone 1. PRA may be on Zone 2-7.
Releasing	Pre-Release timer	Y	0-60 Sec	Full range	Length of time of pre-release

Topic	Feature or Option	Permitted in UL (Y/N)	Possible Settings	Setting(s) Permitted in UL864 / S527	Comment
Releasing	Pre-Release Timer - Manual Station	Y	0-30Seconds	Full Range	Length of time of pre-release
Releasing	Pre-Release Pattern	Y	Constant ANSI Temp 3 March Code Double Time	ANSI not allowed	NAC Output Pattern during pre-release
Releasing	Manual Release Abort Allowed	Y	Yes/No	All settings allowed	Specifies if manual Release can be aborted. Default is No
Releasing	Soak Timer	Y	0-30 Minutes (0.1 min increments) 0-300 Minutes (1 min increments)	All settings allowed	Length of Time the Release circuit is active post-release

Menu Tree

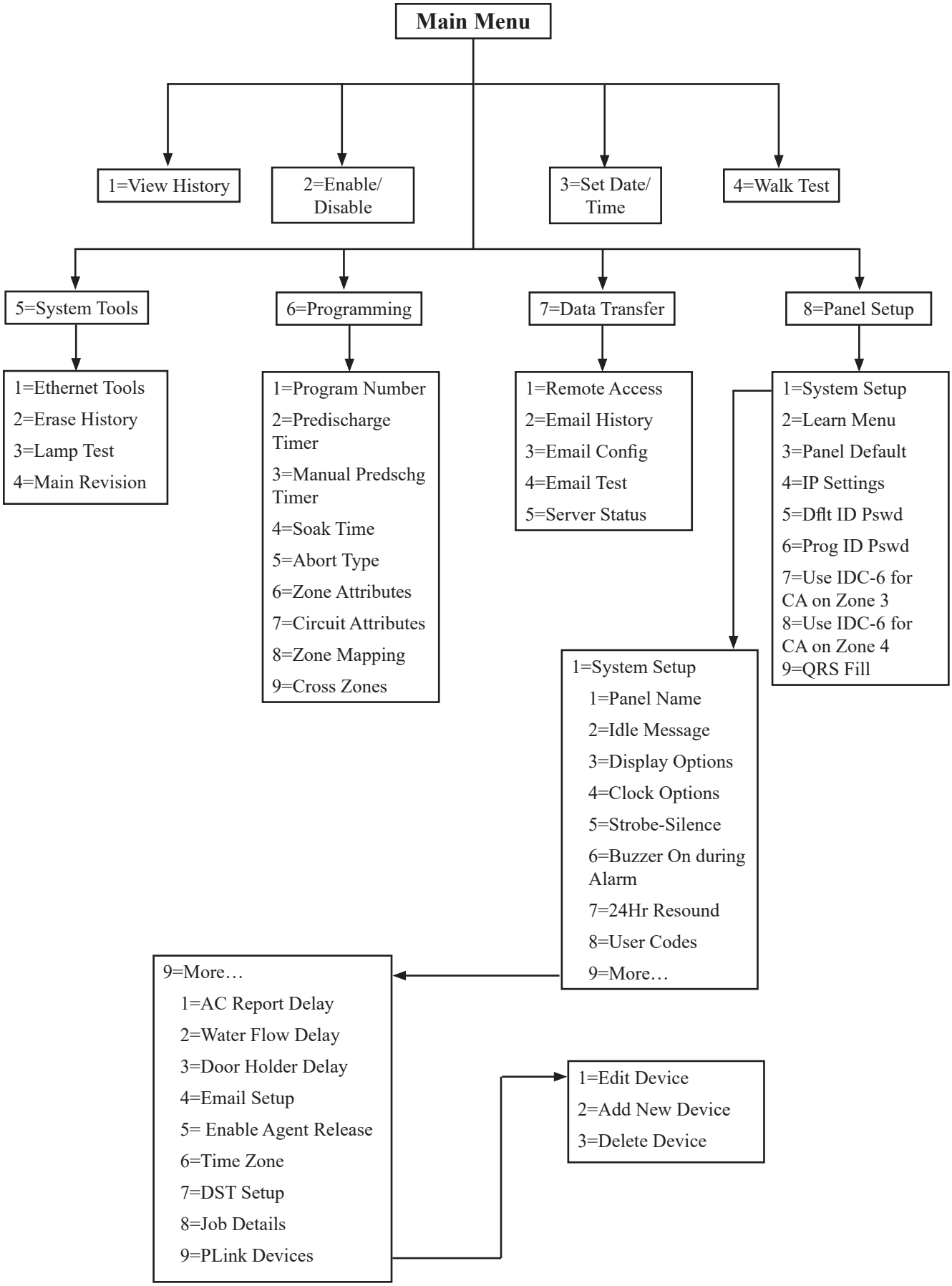
Main Menu
1=View History
2=Enable/ Disable
3=Set Date/ Time
4=Walk Test
5=System Tools
6=Programming
7=Data Transfer
8=Panel Setup
1=Ethernet Tools
2=Erase History
3=Lamp Test
4=Main Revision
1=Program Number
2=Predischarge Timer
3=Manual Predschg Timer
4=Soak Time
5=Abort Type
6=Zone Attributes
7=Circuit Attributes
8=Zone Mapping
9=Cross Zones
1=Remote Access
2=Email History
3=Email Config
4=Email Test
5=Server Status
1=System Setup
2=Learn Menu
3=Panel Default
4=IP Settings
5=Dflt ID Pswd
6=Prog ID Pswd
7=Use IDC-6 for CA on Zone 3
8=Use IDC-6 for CA on Zone 4
9=QRS Fill
1=System Setup
1=Panel Name
2=Idle Message
3=Display Options
4=Clock Options
5=Strobe-Silence
6=Buzzer On during Alarm
7=24Hr Resound
8=User Codes
9=More…
9=More…
1=AC Report Delay
2=Water Flow Delay
3=Door Holder Delay
4=Email Setup
5= Enable Agent Release
6=Time Zone
7=DST Setup
8=Job Details
9=PLink Devices
1=Edit Device
2=Add New Device
3=Delete Device

Section 7: Communication Options

Connection Drawing for Central Station and Remote Station Operation of PFC-4410G3 to Listed Commercial Fire Off Premise Communicator

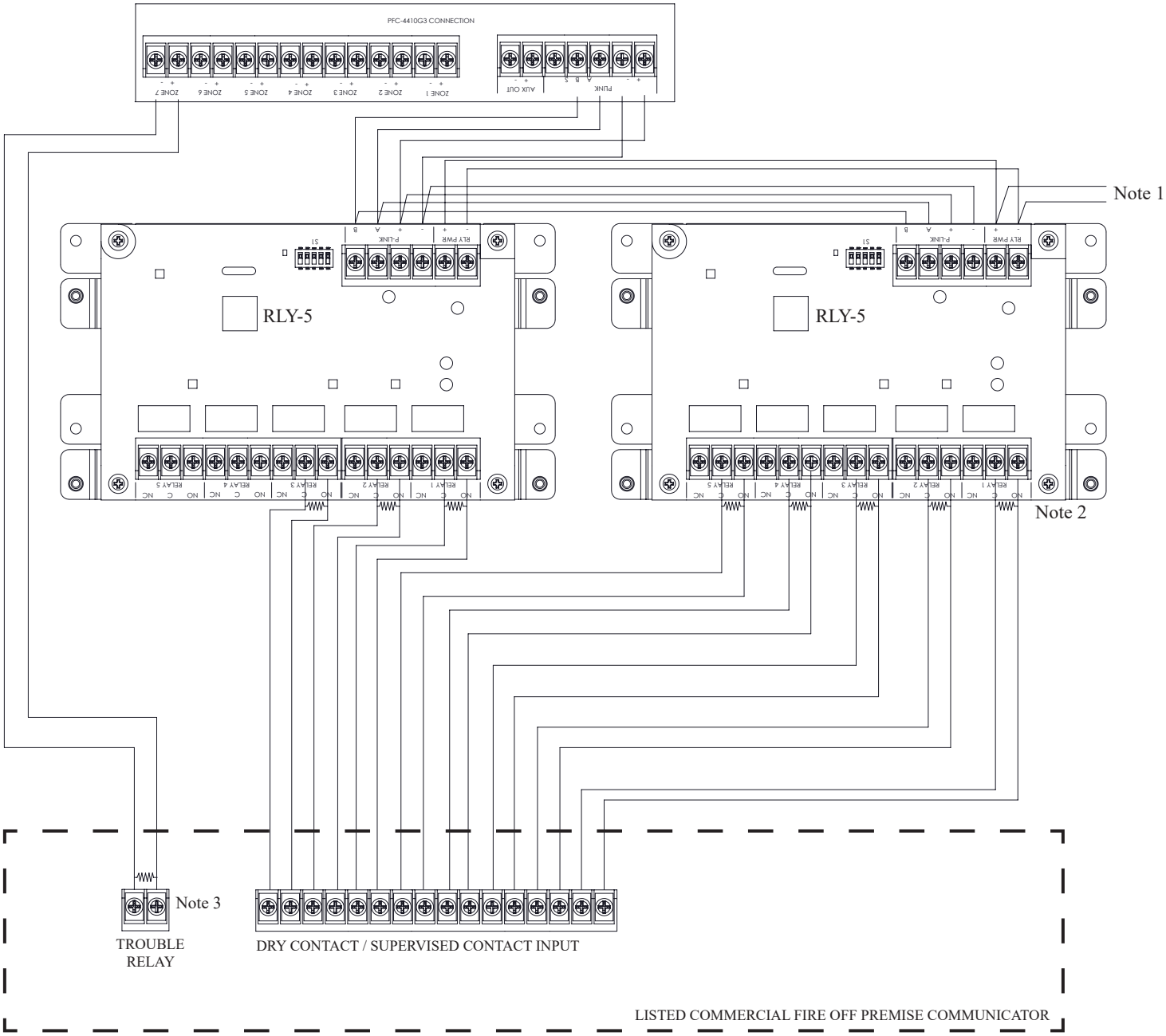

Note 1: Refer to Figure 30. for RLY-5 power wiring options

Note 2: EOLR as required by listed commercial fire off premise communicator

Note 3: Potter EOLR (3005013)

Installation Requirements	• Installation and programing of Listed commercial fire off premise communicator shall be in accordance with manufacturer documentation and applicable local codes and standards. Consult listed commercial fire off premise communicator documentation for communication pathways and transmitter/receiver compatibility • Each RLY-5 relay shall be wired to a dry contact / supervised contact input of the listed commercial fire off premise communicator. Consult commercial fire off premise communicator installation documentation for wiring restrictions. • Commercial fire off premise communicator shall have at least one trouble relay and shall be wired to a TROUBLE input on the PFC 4410G3. Relay may be programmed for primary power trouble transmission delay if required. • Commercial fire off premise communicator shall have an input for each alarm zone • Commercial fire off premise communicator shall have 2 additional inputs for trouble and supervisory • Commercial fire off premise communicator shall have its own primary and secondary power sources or may be connected to PFC-4410G3's continuous Auxiliary Power if voltage and current ratings are compatible. Refer to Figure 10 for connections and voltage / current compatibility.
PFC-4410G3 Programing Requirements	• 1 relay shall be mapped to each alarm input zone. • 1 relay shall be mapped to a trouble zone • 1 relay shall be mapped to a SYS. Supervisory zone • 1 Input shall be a TROUBLE type and shall be wired to commercial fire off premise communicator trouble contact

NOTICE

For US installations the commercial fire off premise communicator shall be Listed to 10th Edition UL864

For Canada installations the commercial fire off premise communicator shall be listed to CAN/ULC-S559

Section 8: Appendices

Appendix A: System Maintenance and Testing

⚠ CAUTION

Testing the panel or associated devices may result in a discharge of the suppression system. All necessary precautions shall be taken to prevent an unwanted activation of the suppression system. Read, understand and follow all testing instructions as well as all cautions, warnings and notices associated with the suppression system and this panel before beginning any testing or servicing.

Acceptance Test

The control panel is required to be installed in accordance with local and state building codes and NFPA 72 (For Canada: ULC Standard CAN/ULC-S536). At the conclusion of each original installation or modification of this system, the control panel and related system is required to be inspected and tested in accordance with NFPA 72 (For Canada: ULC Standard CAN/ULC-S536) to verify compliance with the applicable standards.

Testing shall be conducted by personnel trained in the operation of this panel and the suppression system it is operating. Testing shall be conducted in in the presence of a representative of the Authority Having Jurisdiction (AHJ) and the building owners representative. Refer to NFPA 72 *(National Fire Alarm Code*), Inspection Testing and Maintenance chapter. For Canada refer to ULC Standard CAN/ULC-S536

Periodic Testing and Service

Periodic testing and maintenance of the control panel, all initiating points, all notification appliances and any other associated equipment is essential to ensure the system will operate as designed in emergency situations. Service and test the control panel according to the schedules and procedures outlined in the following documents:

- NFPA 72, Inspection, Testing and Maintenance chapter. (For Canada refer to ULC Standard CAN/ULC-S536)
- Service manuals and instructions for any and all peripheral points installed in the system. It is very important that any and all trouble conditions (or faults) be corrected immediately.

Operational Checks

During interim periods between formal testing and at regular intervals the control system should be subjected to the following operational performance checks. The Authority Having Jurisdiction (AHJ) should be consulted for requirements on frequency of system testing.

- Check that the green AC power LED is lit.
- Check that all amber LED's are off.
- Using the system menus, perform a Lamp Test function. Verify that all LED's operate.
- Before proceeding: (1) Disable the suppression system to prevent an unwanted discharge of the suppression system. (2) Notify the fire department and the central alarm receiving station if transmitting alarm status conditions; (3) Notify facility personnel of the test so that alarm-indicating points are disregarded during the test period; and (4) When necessary, bypass activation of alarm notification appliances and speakers (if installed) to prevent sounding of evacuation signals.
- Activate an input device (*i.e., manual station, heat or smoke detector*), and check that all notification appliances function.
- Notify Fire Department, central alarm receiving station and /or building personnel when finished with testing the system.
- The test of ground fault must be measured in below 10k ohms impedance.
- Make certain that the panel and all releasing devices are in a non-alarm/unactivated condition.
- Restore the suppression system back to service

Replacement and Testing Recommendations

The batteries are to be replaced at least once every four years or more frequently if specified by local AHJ and manufacturer recommendations. Batteries should be dated at the installation. Minimal replacement battery capacity displays on the control panel marking label. The batteries are required to be UL Recognized batteries with a date of manufacture permanently marked on the battery. The battery is to be tested at least annually and if the battery is showing signs of failure, it should be replaced. Immediately replace a damaged or leaking battery, and always replace batteries in pairs.

Proper Handling / First Aid Procedures

- In the event a battery leaks and contact is made with the Sulfuric Acid, immediately wash skin with water for at least 15 minutes. Water and household baking soda provides a good neutralizing solution for Sulfuric Acid.
- If Sulfuric Acid makes contact with eyes, flush with water for 15 minutes and seek immediate medical attention.
- Ensure proper handling of the battery to prevent short-circuits.
- Take care to avoid accidental shorting of the leads from uninsulated work surfaces, tools, jewelry and coins.
- If a battery is shorted, the battery and any connected equipment may be damaged. Additionally, a short may injure personnel.

Appendix B: Compatibility Table

This section provides a listing of all Output appliances, two-wire (2-wire) smoke detectors, and remote annunciator device compatibilities.

Table 11: Device Compatibilities

Module/Device	Compatibilities
Output Appliances	Refer to Potter document *"5403592 Output Compatibility Document"*.
Two-Wire (2-Wire) Smoke Detectors	Refer to **Appendix C** for a complete listing of 2-wire smoke detectors.
P-Link	RA-4410G3 - LCD Remote Annunciator PSN-1000 – Intelligent Power Supply Expander LED-4410G3 Annunciator RLY-5 – Relay Board IDC-6 - Initiating Device Circuit Module
Class A Expander	CA-4064 Class A Expander
Releasing Device	Refer to Potter document 5403615 Releasing device capability

Appendix C: Compatible Conventional Smoke Detectors & Bases Table Compatibility List ID A

Table 12: Smoke Detector & Bases Compatibilities			
Detector Model	**Identifier**	**Base Model**	**Identifier**
SYSTEM SENSOR (Brk) (Max. No. Of Detectors Per Zone Is 20)			
1400*	A	N/A	N/A
2400*	A	N/A	N/A
2400TH*	A	N/A	N/A
2W-B	A	N/A	N/A
C2W-BA (ULC Listed Only),	A	N/A	N/A
C2WT-BA (ULC Listed Only)	A	N/A	N/A
DETECTION SYSTEM (Max. No. Of Detectors Per Zone Is 25)			
DS250	A	MB2W/MB2WL	A
DS250TH	A	MB2W/MB2WL	A
ESL (Max. No. Of Detectors Per Zone Is 25)			
611U	S10	601U	S00
611UD	S10	601U	S00
611UT	S10	601U	S00
612U	S10	601U	S00
612UD	S10	601U	S00
613U5	S10	601U	S00
611UD	S10	609U10	S00
612UD	S10	609U10	S00
425C	S10	N/A	N/A
425CT	S10	N/A	N/A
HOCHIKI (Max. No. Of Detectors Per Zone Is 25)			
SLR-24*	HD-3	HSC-221R	HB-71
		HSB-221	HB-54
		HSB-2211	HB-54
		NS6-221	
		NS4-221	
		NS6-220	HB-3
SLR-24H*	HD-3	HSC-221R	HB-71
		HSB-221	HB-54
		HSB-2211	HB-54
		NS6-221	
		NS4-221	
SIJ-24*	HD-3	HSC-221R	HB-71
		HSB-221	HB-54
		HSB-221N	HB-54
		NS6-221	
		NS4-221	
Detector Model	**Identifier**	**Base Model**	**Identifier**
HOCHIKI (Max. No. Of Detectors Per Zone Is 25)			
SOC-24V*	HD-3	HSB-221	HB-54
		NS6-221	HB-4

Detector Model	Identifier	Base Model	Identifier
		NS4-221	HB-4
		NS6-220	HB-3
SOC-24VN*	HD-3	HSB-221	HB-54
		NS6-221	HB-4
		NS4-221	HB-4
		NS6-22o	HB-3
SOE-24V	HD-3	NS4-100 and NS6-100	HB-55
		NS4-220 and NS6-200	HB-3
		NS4-221 and NS6-221	HB-4
		NS4-224 and NS6-224	HB-5
SOE-24H	HD-3	NS4-100 and NS6-100	HB-55
		NS4-220 and NS6-200	HB-3
		NS4-221 and NS6-221	HB-4
		NS4-224 and NS6-224	HB-5
FENWAL (Max. No. Of Detectors Per Zone Is 25)			
CPD-7051*	I51FE1	2-WIRE	FE51A
POTTER (Max. No. Of Detectors Per Zone Is 25)			
PS-24*	HD-3 (HOCHIKI)	SB-46	HB-71(HOCHIKI)
			HB-54 (HOCHIKI)
		SB-93	HB-3 (HOCHIKI)
PS-24H	HD-3 (HOCHIKI)	SB-46	HB-71 (HOCHIKI)
			HB-54 (HOCHIKI)
IS-24*	HD-3 (HOCHIKI)	SB-46	HB-71 (HOCHIKI)
			HB-54 (HOCHIKI)
CPS-24	HD-3 (HOCHIKI)	SB-46	HB-4 (HOCHIKI)
		SB-93	HB-3 (HOCHIKI)
CPS-24N	HD-3 (HOCHIKI)	SB-46	HB-4 (HOCHIKI)
		SB-93	HB-3 (HOCHIKI)
CPSD-24V	HD-3 (HOCHIKI)	SB-46	HB-3 (HOCHIKI)
		SB-93	HB-4 (HOCHIKI)
CPSHD-24H	HD-3 (HOCHIKI)	SB-46	HB-3 (HOCHIKI)
		SB-93	HB-4 (HOCHIKI)
PC-2P	PES	PC-6DB	PES
		PC-4DB	PES
PC-2H	PES	PC-6DB	PES
		PC-4DB	PES
PC-2PH	PES	PC-6DB	PES
		PC-4DB	PES
PC-2PN	PES	PC-6DB	PES
		PC-4DB	PES

*** UL and ULC Listed**

NOTE: If using a mix of System Sensor and other smoke detectors, a maximum of 20 detectors shall be permitted.

Appendix D: Installation Notes

Circuit board assembly is mounted in the cabinet using six (6) fasteners as shown in the illustration below.

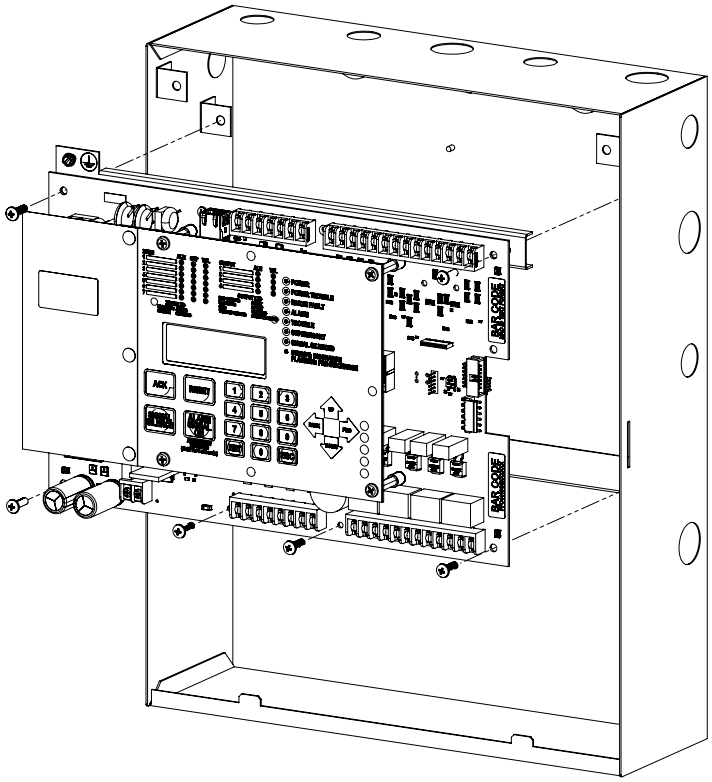

POTTER
The Symbol of Protection

Operating Instructions for PFC-4410G3 Releasing Panel

Normal Standby	User defined custom message, date and time and ALL SYSTEMS NORMAL displayed on LCD. Green power LED on. All indicators other than power are off.
Alarm Condition	Zone, or user specified description and “ALARM” is displayed with input type and input number on LCD. Red ALARM LED flashes. Audible/Visual indicators on.
To Abort System (Only available on Agent Suppression Systems. See description of Abort at Abort station)	If display reads “ALARM" or "Pre Release", immediately check the protected area. If no emergency condition is apparent, it is possible to stop the system (dependent on program type) by operating the abort switch. Pressing and holding the abort switch may prevent the pre-discharge timer from starting. This allows for a more thorough investigation of the area. Releasing the abort button will resume the countdown to discharge. If a zone programmed as MANUAL RELEASE has been activated, the abort may not be allowed to stop the system from activating.
To Silence Alarm	Do not silence an alarm until it has been determined that an emergency condition does not exist. To silence, open door and press SIGNAL SILENCE button.
To Reset Alarm	After the condition that caused an alarm has been corrected, press the RESET button. **Do not press RESET until the alarm event has been fully investigated and an All-Clear signal has been given by authorized personnel.**
Trouble Condition	Yellow System Trouble indicator flashes and buzzer is on. The display indicates the specific trouble condition and circuit.
To Silence Trouble	Open door, use up/down arrow keys to view and ACK button to acknowledge all trouble conditions. The panel will not silence until all events have been acknowledged. For most trouble conditions the panel automatically restores to normal when the trouble condition has been corrected. Some trouble conditions require operation of the RESET button for restoration. *Note: The problem must be corrected as soon as possible as this may make the system inoperative. Contact your service organization if necessary.*
Supervisory Condition	The display will show the particular supervisory condition, “SUPERVISORY”, “TAMPER”, “LOW AIR”, “HIGH AIR”, LOW AIR, and the circuit. The Amber supervisory LED flashes. The local buzzer will sound. Any indicating appliance which has been described as “SUPERVISORY” will also sound.
To Silence Supervisory	Open door, use up/down arrow keys to view and ACK button to acknowledge all supervisory conditions.
To Reset Supervisory	After the supervisory condition has been restored, press the RESET button. This may vary depending on the program used.
Alarm Signal Activation	Press and hold ALARM SIGNAL ON for up to 5 seconds
Fuse Replacement	Use only 4 Amp 250 VAC Time-Lag fuse. The fuse is for protection of the batteries and charging circuit.

Testing and Maintenance:

Test this system monthly or more frequently if required by the AHJ. Before testing notify the monitoring facility and/or building personnel if applicable. Take care not to activate the release circuit during testing. Test all initiating zones and notification circuits as described in the test procedure in the Potter PFC-4410G3 manual #5403751. Test in accordance with NFPA 72 Inspection, Testing and Maintenance chapter (For Canada: ULC Standard CAN/ULC-S536) and any local requirements. Test batteries in accordance with battery manufacturer instructions or with battery tester acceptable to the AHJ such as Stone Technologies model STC612A. Mark date of installation on batteries and replace every 4 years or sooner depending on test results or if panel indicates Low Battery. Contact the agency listed below for service.

For Service Call:_____

Address:_____

Telephone:_____

Installer: Frame and place adjacent to control panel and at eye level.

A copy of the applicable Abort description on pg 6-99 of manual 5403571 should also be framed and hung at the panel and at every abort station.

5403752 - Rev A