TX3-T10 Quick Start

Contents of the Kit

- TX3-T10-S or TX3-T10-G
- 4 x security screws
- 4 x washers for surface installation of TX3-T10BB
- TX3-T10BB mounting box
- Nut for securing ground wire to the inside of TX3-T10BB
- 2 x ferrites and key
- Optional Ethernet patch cable - use this for the LAN connection unless your LAN cable is crimped to fit in TX3-T10BB
- USB flash drive with manuals
- Reversible screwdriver - make sure that the hex side is out, as shown:

You Need

- 4x4" electrical box with a depth of at least 2.27”

Wiring

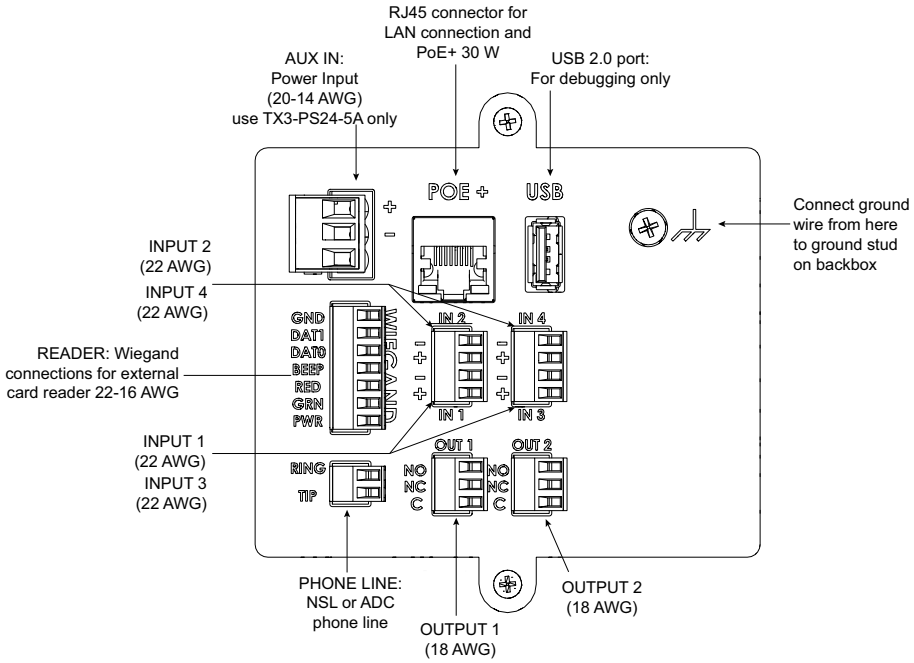

Wiring Tips

- Perform visual inspection of the parts for obvious issues.
- Group the incoming wires through the hole in the mounting plate. Use a wire tie to group wires for easy identification and neatness.

Maximum Wiring Lengths

- Inputs: 305 m (1000 ft) at 22 AWG
- PoE+: 100 m (328 ft) CAT5e or CAT6
- Outputs: consult the documentation for the door strike or maglock
- Wiegand: 152.4 m (500 ft)

TX3-T10BB Dimensions

FRONT VIEW

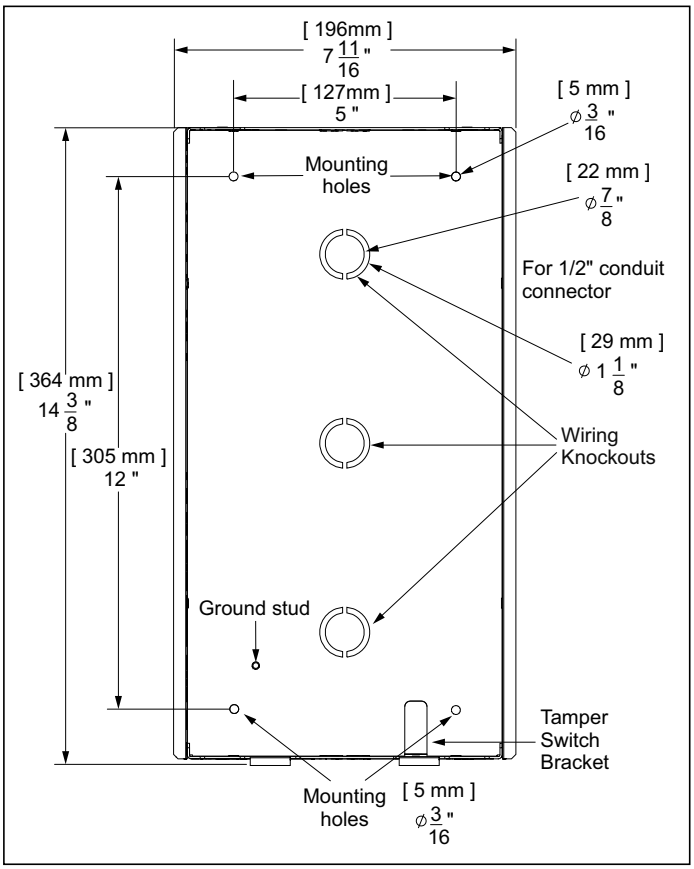

BACK VIEW

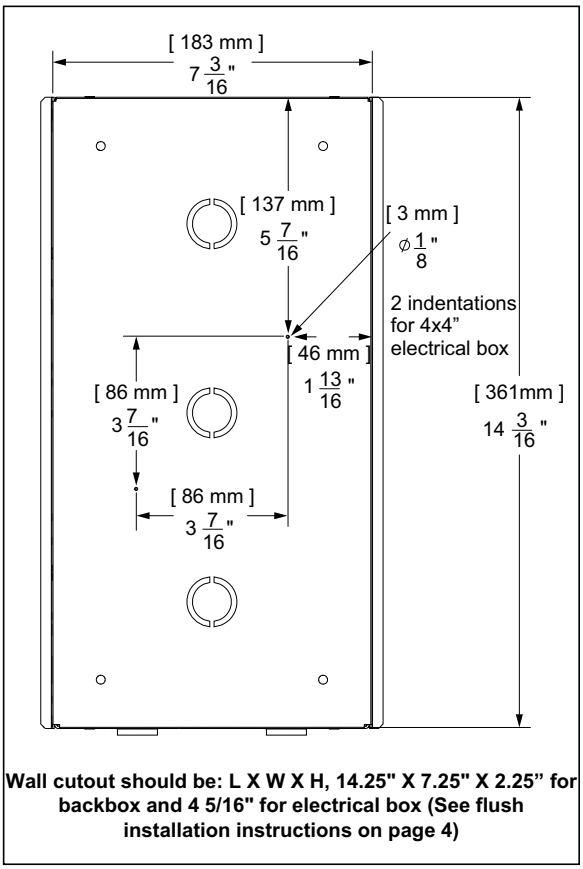

Wall cutout should be: L X W X H, 14.25" X 7.25" X 2.25" for backbox and 4 5/16" for electrical box (See flush installation instructions on page 4)

SIDE VIEW

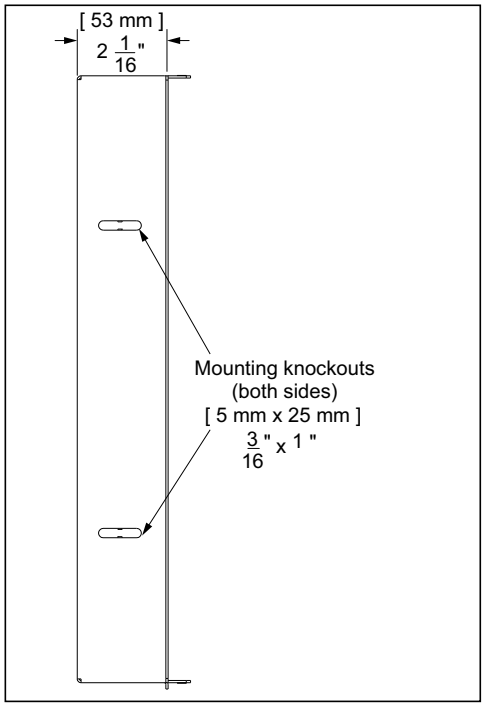

BOTTOM VIEW

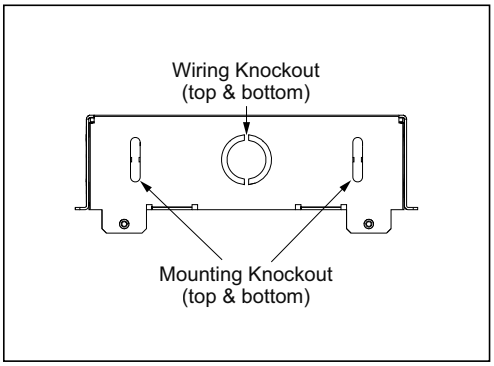

Surface Installation

Note: Install TX3-T10BB with the tamper switch bracket at the bottom.

1. Cut an opening in the wall for a 4x4" electrical box. The electrical box must have a depth of at least 2.27”.
2. Route the wiring through the knockout and into the electrical box.
3. Install the ferrites on the network cable and the power cable as shown in Page 5. Place the ferrites in the electrical box.
4. Attach the electrical box to the TX3-T10BB backbox. Mount it over one of the three knockouts on the back, or over the knockout on the bottom. See illustration below.

   Note: If you use the centre knockout on the back, use the two indentations shown in Page 2 as guides for the electrical box. You can also use the template provided as the last page of this document.

5. Connect the ground wires as described in Page 6.
6. Attach the TX3-T10BB backbox to the wall using the four provided washers and four fasteners appropriate to the wall. The mounting holes are 3/16” (5 mm) in diameter. The holes are shown in Page 2.

   Note: For indoor installation, the washers are optional. For outdoor installation, the washers are recommended.

7. Mount the TX3-T10 unit inside the backbox. The backbox has 4 tabs that go into 4 slots on the back of the TX3-T10 unit. See illustration below.

   Note: If the metal tabs on TX3-T10BB do not fit into the TX3-T10, use pliers to adjust them.

8. Secure 4 security screws, 2 from top and 2 from bottom, with the provided screwdriver. See illustration below.

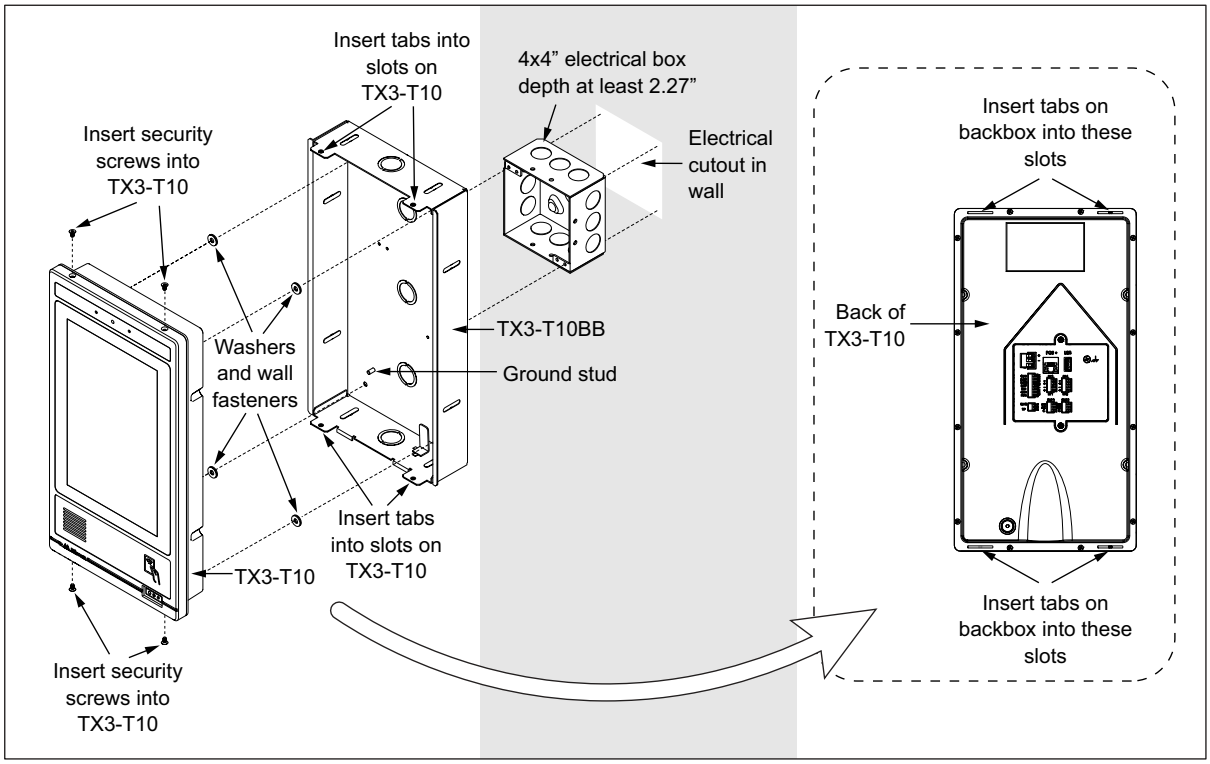

Flush Installation

Note: Install TX3-T10BB with the tamper switch bracket at the bottom.

1. Cut an opening in the wall for TX3-T10BB and a 4x4” electrical box. The electrical box must have a depth of at least 2.27”.

   The dimensions of the cutout should be 362 mm (14 1/4”) high by 184 mm (7 1/4”) wide by 55 mm (2 1/4”) minimum deep.

   There must be an additional cutout for the electrical box with a total depth of 109 mm (4 5/16”). See page 5.

   Ensure that there are supports on at least two sides for mounting TX3-T10BB.
2. Route the wiring through the knockout and into the electrical box.
3. Install the ferrites on the network cable and the power cable as shown in Page 5. Place the ferrites in the electrical box.
4. Attach the electrical box to the TX3-T10BB backbox. Mount it over one of the three knockouts on the back, or over the knockout on the bottom. See illustration below.

   Note: If you use the centre knockout on the back, use the two indentations shown in Page 2 as guides for the electrical box. You can also use the template provided as the last page of this document.
5. Connect the ground wires as described in Page 6.
6. Insert the TX3-T10BB backbox into the wall cutout as shown in illustration below.
7. Attach the backbox to supports on at least two sides with four fasteners appropriate to the wall.

   Note: The mounting knockouts are 3/16” x 1” (5 mm x 25 mm) and are shown on Page 2. Page 5 shows an example of mounting TX3-T10BB to a wall stud and a horizontal support.
8. Mount the TX3-T10 unit inside the backbox. The backbox has 4 tabs that go into 4 slots on the back of the TX3-T10 unit. See illustration below. If the metal tabs on TX3-T10BB do not fit into the TX3-T10, use pliers to adjust them.
9. Secure 4 security screws, 2 from top and 2 from bottom, with the provided screwdriver. See illustration below.

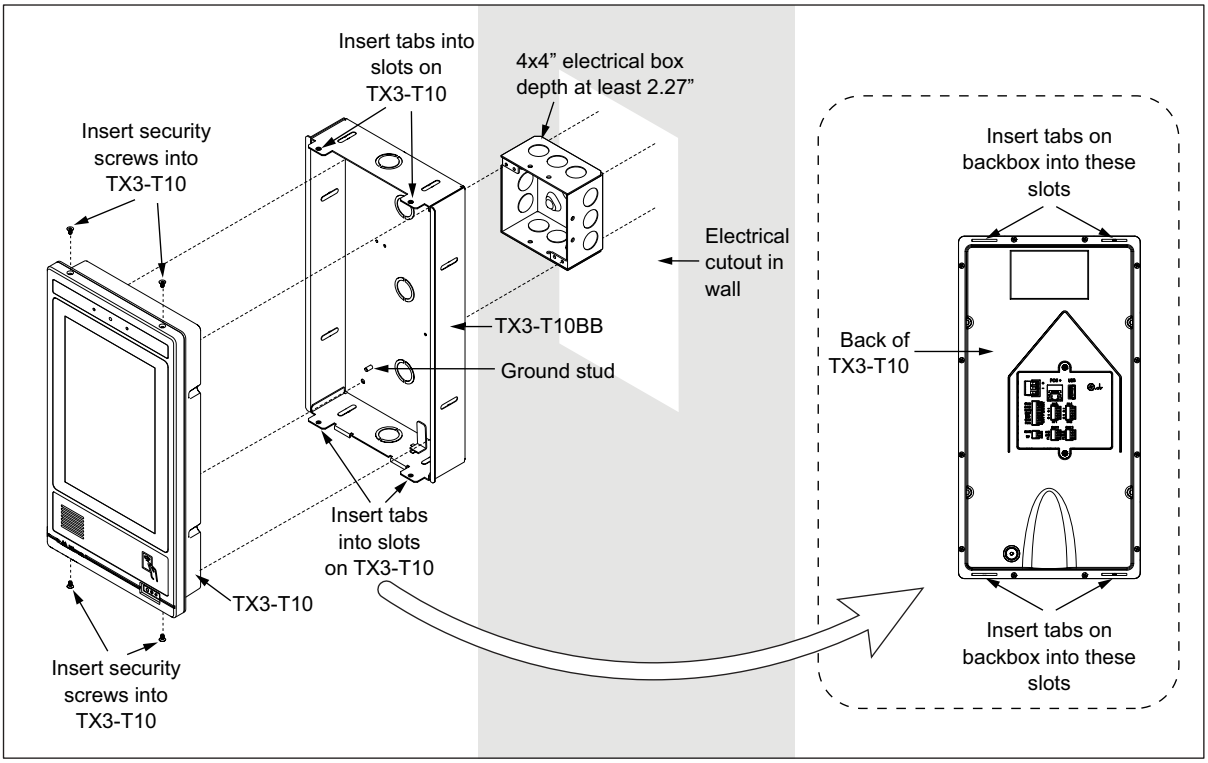

Example of mounting TX3-T10BB to a wall stud and a horizontal support

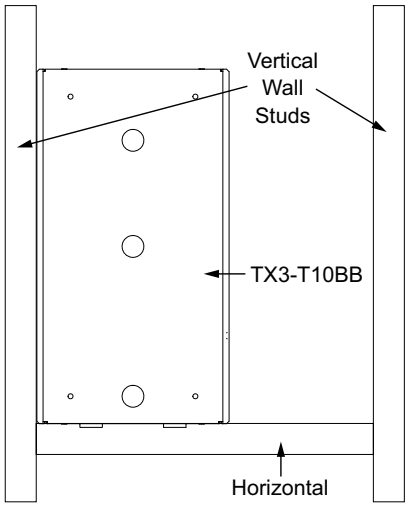

TX3-T10BB Flush wall cutout (side view)

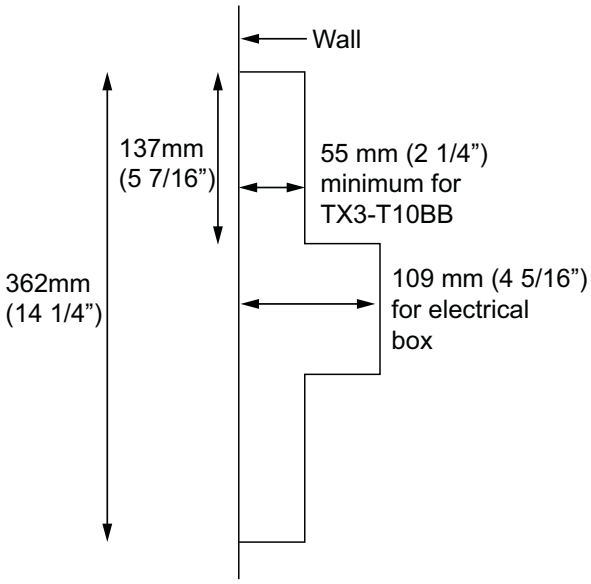

Placement of Ferrites for FCC Standard

Install the two included ferrites (Mircom part number FER-001) on the network cable and the power cable. (If you are using PoE+ for power, then the power cable is not required.)

Wrap the cable once around the ferrite. Place the ferrites in the electrical box. See image below.

Ferrite installed on network cable

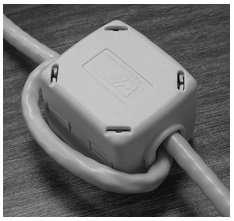

Ferrite installed on power cable

Ferrites installed on the power cable and Ethernet cable in a 4x4” electrical box with a depth of at least 2.7”

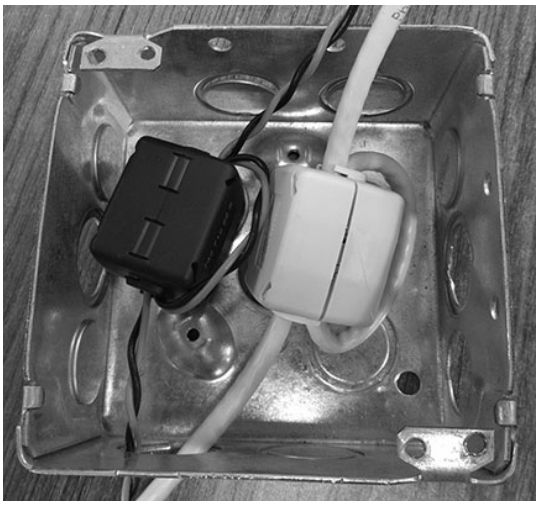

Grounding

Connect the ground wire from the ground screw on the back of the TX3-T10 to the ground post inside the TX3-T10BB with the included nut. See illustration below.

Connect the second ground wire from the ground post inside TX3-T10BB to a solid earth ground (building system ground or a cold water pipe) as shown in illustration below.

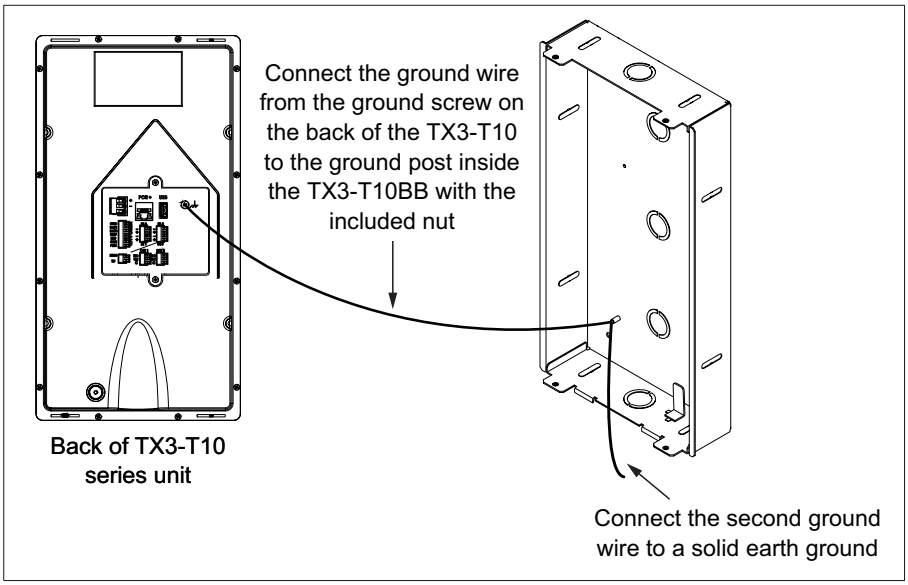

Mircom
http://www.mircom.com

CANADA - Main Office
25 Interchange Way
Vaughan, ON L4K 5W3
Tel: (888) 660-4655,
(905) 660-4655

U.S.A
4575 Witmer Industrial Estates
Niagara Falls, NY 14305
Tel: (888) 660-4655

For more details, see LT-6766 on the Mircom website and the USB flash.
Mircom technical support: 1-888-647-2665