# CPS-OPEN4

MONITORED DUAL-SIDED PHOTO EYES

## Weatherproof, Durable and Dependable

LiftMaster's® CPS-OPEN4 Monitored Dual-Sided Photo Eyes are weatherproof and durable. The flexible rubber housings absorb minor contact allowing the photo eyes to maintain alignment. With its NEMA 4X safety rating, the CPS-OPEN4 provides moisture protection, corrosion resistance, making it the perfect addition to LiftMaster's quality line of safety sensors. Our photoelectric eyes and edge sensor models are UL/cUL Listed for use with all LiftMaster Commercial Door Operators. The CPS-OPEN4 can be used as a primary and/or ancillary entrapment device and meets UL 325 2010 safety standards.

- Flexible housing maintains alignment position after minor contact
- NEMA 4X enclosure protects against direct water–spray and corrosion
- Dual-sided infrared sensors
- For indoor/outdoor use
- Maximum range of 45 feet
- Solid sensor lights indicate correct sensor alignment
- Polarized cables for proper signal continuity and feedback

UL 325 requires all commercial door operators to be either constant pressure to close or be equipped with a primary external monitored entrapment protection device. The CPS-OPEN4 meets this requirement. Failure to use the appropriate sensor or failure to install the sensor properly, may expose the installer and customer to liability, should an accident occur.

### LiftMaster's full line of Monitored Photo Eyes

CPS-UN4

CPS-RPEN4

CPS-OPEN4

CPS-U

### Available Accessories:

**Interface Card**
(CPS3CARD)
Provides the option of adding a second set of monitored photo eyes or a monitored edge to a door opening. For extra door protection.



LiftMaster®

# CPS-OPEN4

MONITORED DUAL-SIDED PHOTO EYES

## SPEC SHEET

### STANDARD SPECIFICATIONS

**DIMENSIONS**
Length: (35mm/1.38")
Width: (30.40mm/1.12")
Height: (152mm/5.98")

**CARTON**
Dimensions:
- Height: 2.25"
- Width: 7.75"
- Length: 8.5"
- Weight: 1.0 lb

**WARRANTY**
One year limited warranty

**TECHNICAL SPECIFICATIONS**
Technical Data Range
13.7m/45ft.

Angle of Adjustment
Min. 2 Degrees

Min. Alignment Distance
36" (3 ft.)

Outdoor Rating
IP65, NEMA 4X

Temperature Range
-25 to +70C, -4°F – 158°F

Terminal Interface
Monitored 2-Wire (Polarized)

Color Code Sensors
Transmitter: Red LED
Receiver: Green LED

## QUICK INSTALL GUIDE

**PREPARE**
Be sure to disconnect power to the operator BEFORE installing the photo eyes. The door MUST be in the fully opened or closed position before installing the photo eye.

**INSTALL**
Set up the photo eyes no higher than 6" (15 cm) above the floor and no farther than 6" from the center plane of the door. For installation ease, both photo eyes should be on the same horizontal plane.

**COMPLETE**
Make sure the photo eyes are powered on properly. photo eyes must be at least 36" (3 ft.) apart for alignment verification.

For additional product information and installation procedures please see comprehensive installation manual inside the box.

Wiring Connections
(Logic 4 board shown)

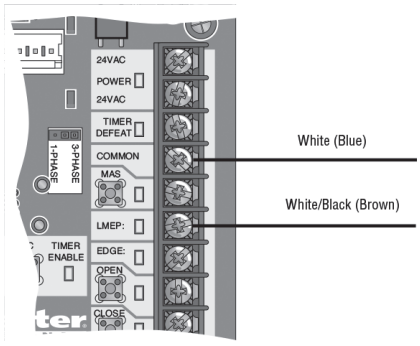


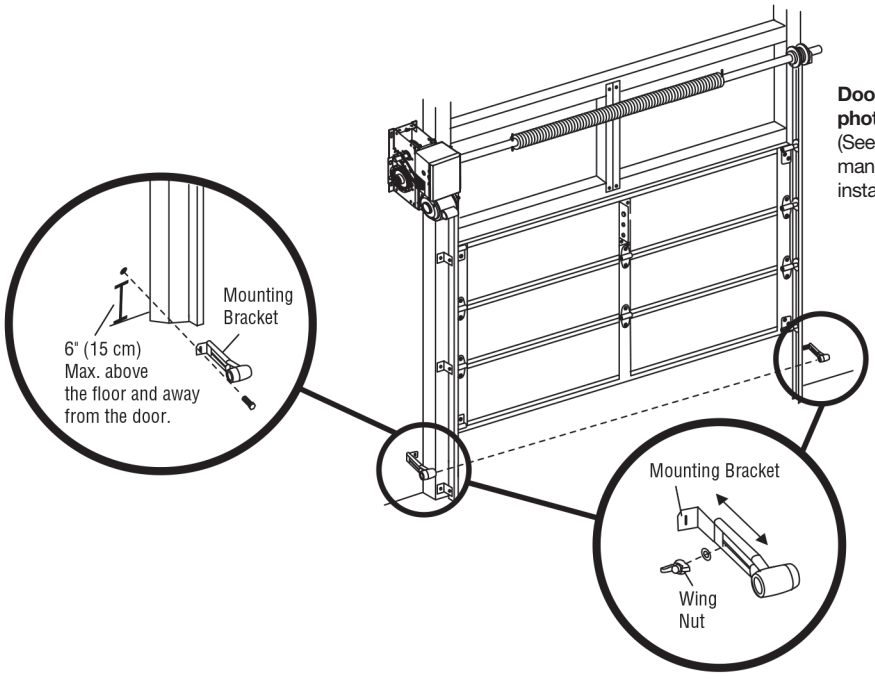


**Door shown with photo eyes installed.**
(See product installation manual for complete installation instructions)

© 2014 LiftMaster All Rights Reserved
845 Larch Ave., Elmhurst, IL 60126
LiftMaster.com
LMCDCAOPEN 3/14

LiftMaster®