KS-EM
Server Cabinet Lock

Installation & Operating Instructions

Experience a safer and more open world

Operation

To activate the KS-EM electronic access control Server Cabinet Lock, a simple contact such as a switch, relay or even an adjacent KS210 can be used. Alternate control options are available utilizing our accessory harness kit. For emergency override, insert a valid key into the SFIC (Small Format Interchangeable Core) cylinder and rotate to the unlocked position. Upon access granted, verify functionality by lifting and rotating the handle to release the locking cam and open the door.

NOTE: The unit shall be powered by a UL294 listed power supply or access control output with a power limited Class 2 output. The DC input feed to the device shall be protected by 1A max rated over current protection provided at the installation site.

ASSA ABLOY recommends the use of Securitron and Life Safety Power power management products for use with ASSA ABLOY branded electromechanical and integrated electronic access control locking devices.

Diagram 1 Product Components

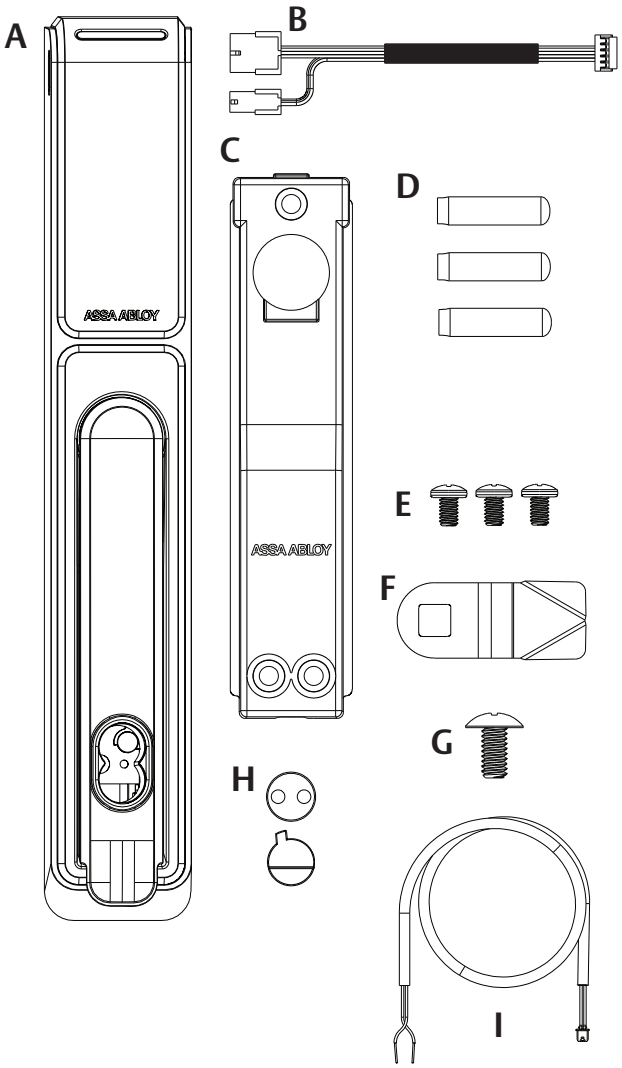

Package Contents

- **A** KS-EM Lock Body
- **B** Lock Interface Cable
- **C** Rear Mounting Bracket
- **D** Connectors (3)
- **E** #8-32 x 1/4" Pan Head Phillips Screws (3)
- **F** Locking Cam
- **G** #1/4-20 x 1/2" Truss Head Phillips Screw (1)
- **H** SFIC Cam & Spacer
- **I** Plug-In External DPS Adapter *(Optional)*

Recommended Tools

- Phillips #2 Screwdriver
- Cutting Wheel (As Required)

Recommended Accessories

- **SFIC** Mechanical Core and Keys
- **KS-DPS** Door Open/Closed Status
- **CBL6-QC12** 6 ft Door Interface Cable
- **CBL12-QC12** 12 ft System Side Interface Cable
- **CBL-QCKS-D** (Contact Factory for Ordering)

WARNING: This product can expose you to chemicals including lead, which is known to the state of California to cause cancer and birth defects or other reproductive harm. For more information go to P65Warnings.ca.gov.

Specifications

Designed For Use With Data Server Cabinets (9U or larger).

- **Lock Prep** 6" x 1" [150 x 25 mm]
- **Locking Type** Cam Activated
- **Mechanical Key Override** SFIC 6 or 7-Pin (Sold Separately)
- **Holding Force** 350 lbs

Electrical

- **LED Visual Indicator** Red / Green
- **Voltage** 12–24 VDC

Environmental

- 32° to 122°F [0° to 50°C]
- **Weather Resistance** Tested to meet IP54
- Indoor Use Only

Current Consumption

INPUT VOLTAGE	12VDC	24VDC
Standby Avg[1]	50 mA	40 mA
Max Avg[2]	100 mA	75 mA
Peak[3]	130 mA	130 mA

1 Standby AVG – RMS current draw without an unlock/relock event. LED indication with one LED at any time.

2 Maximum AVG – RMS current draw during continuous lock/unlock cycles. LED indication and actuation of motor.

3 Peak – Maximum power up in-rush during unlock cycles.

Certification & Listings

Hereby, Hanchett Entry Systems, Inc (HES) declares that the radio equipment type KS210 are in compliance with Directive 2014/53/EU. The full text of the EU declaration of conformity is available at the following internal address:

assaabloyesh.com/en/tech-info/digital-asset-search

Mounting

1. LOCATE the 6" x 1" [150 x 25 mm] lock cutout on the door. **Diagram 2.**
2. INSERT the KS-EM Lock Body (A) into the 6" x 1" [150 x 25 mm] cutout. Make sure the bottom tabs grab the back of the wall. **Diagram 3.**
3. ENSURE KS-EM Lock Body (A) is flush against the mounting surface to ensure the tamper switch on the back of the device is fully depressed and operating correctly. **Diagram 4.**
4. CONNECT the female connector on the Lock Interface Cable (B) to the back of the KS-EM Lock Body (A). **Diagram 5.**

   NOTE: ENSURE that the Lock Interface Cable (B) is not pinched or exposed prior to attaching the Rear Mounting Bracket (C).

   - (OPTIONAL) REMOVE the 4-Pin and 8-Pin Molex Connectors from the end of the Lock Interface Cable (B) when the ElectroLynx® Interface Cables are NOT utilized.
   - GO TO Optional Quick Connect Guide (CONNECTIONS & WIRING) when using ElectroLynx Interface Cables.
5. (OPTIONAL) CONNECT the Plug-In External DPS Adapter (I) **Diagram 6** to extend the Tamper/Locked State Monitoring to include other EXTERNAL normally open switches that can be wired in series to monitor additional doors or panels.

   NOTE: The DPS signals a secure state (closed) when the handle is resting in it the locked/latched position.
6. External DPS/Tamper. **Diagram 7.**
   - REMOVE the jumper on the back of the KS-EM Lock Body (A).
   - CONNECT the 2-Pin Plug-In External DPS Adapter (I) to the back of the KS-EM Lock Body.
   - CONNECT additional normally-open switches as shown to monitor door/panel status in series with the integrated Locked State monitoring.
7. ATTACH Rear Mounting Bracket (C) to KS-EM Lock Body (A) using 3 Pan Head Mounting Screws (E). **Diagram 8.**

   NOTE: All jumpers and wiring connection are installed and properly routed to avoid any potential damage prior to installing the Rear Mounting Bracket.
8. INSTALL Locking Cam (F). Secure with Truss Head Screw (G). **Diagram 9.**

Diagram 2 Door Preparation

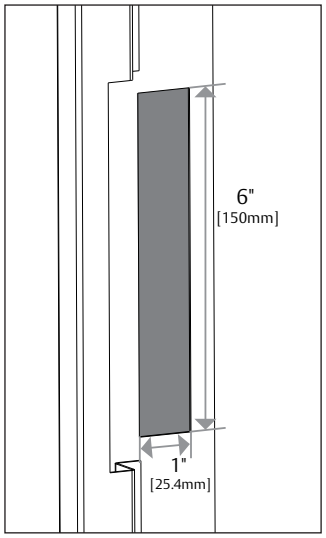

Diagram 3 Insert Lock Body

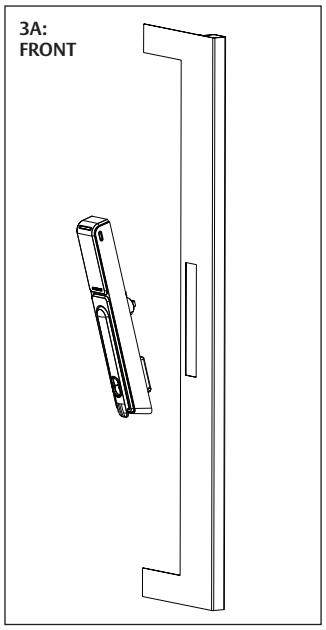

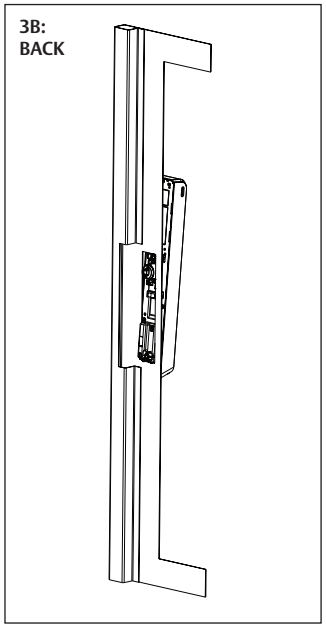

Diagram 4 Tamper Switch

NOTE: If the tamper switch is NOT fully depressed, the Tamper/Locked State/DPS contact will report as a non-secure status.

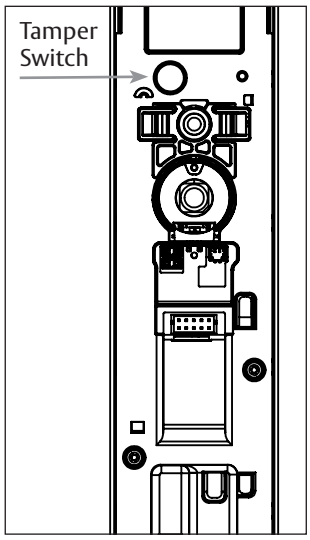

Diagram 5 Connect Lock Interface Cable

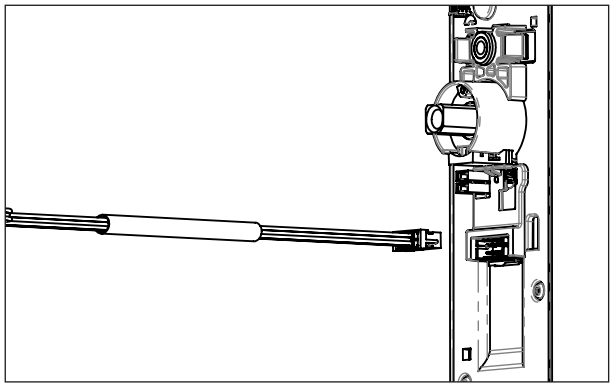

Diagram 6 Connect (Optional) External DPS

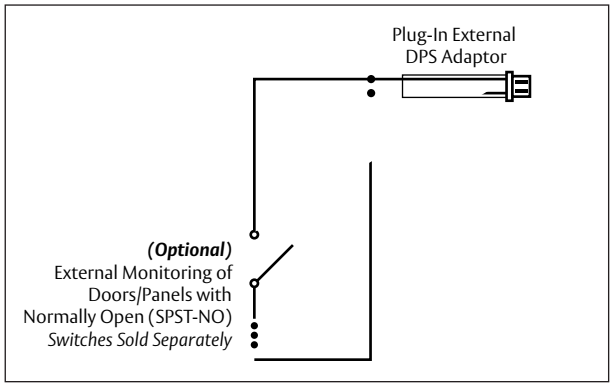

Diagram 7 DPS Activation

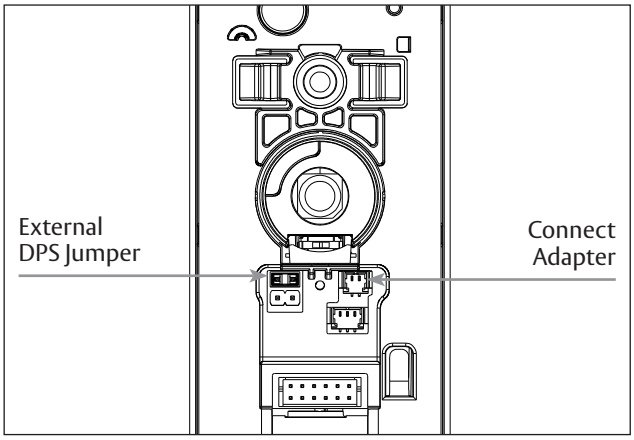

Diagram 8 Attach Rear Mounting Bracket with Pan Head Screws

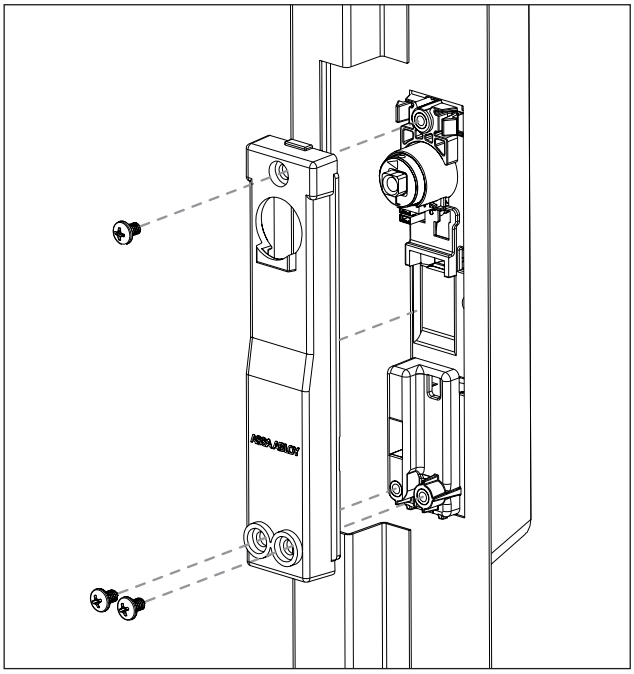

Diagram 9 Install Locking Cam with Truss Head Screw

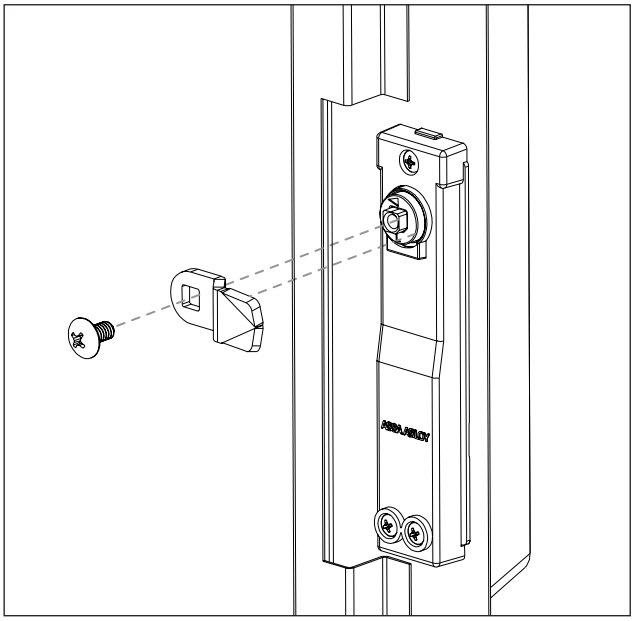

Diagram 10 KS Cam Length Selection

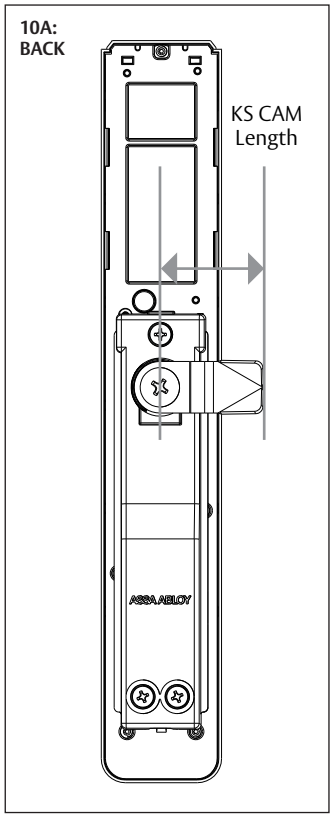

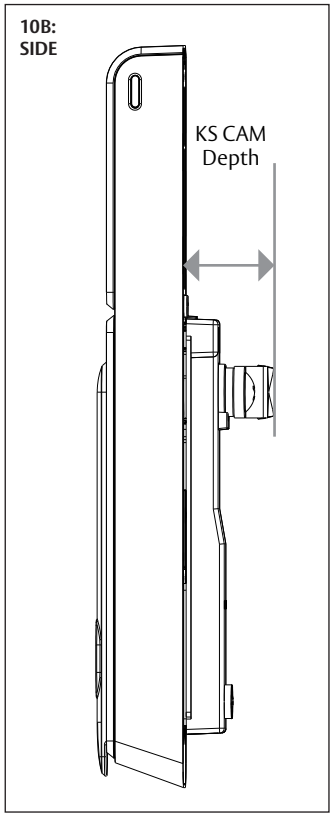

Cam Selection

NOTE: REUSE existing cam when possible.

PART NO.	CAM	CAM LENGTH	CAM DEPTH
Included	38mm – 4 *(standard)*	1-1/2" [38mm]	1" [25.4mm]
KS-CAM38	38mm – 1 *(optional)*	1-1/2" [38mm]	1-1/10" [28mm]
KS-CAM45	45mm – 5 *(optional)*	1-3/4" [45mm]	7/10" [18mm]

Installing SFIC Key Override

NOTE: SFIC blank is required if an SFIC cylinder is not used.
SFIC blank plastic core (SFIC-BC) sold separately.

1. Insert SFIC (H) cylinder and cam into handle.
   Use spacer for 6-pin SFIC.

   NOTE: Be sure to orient cam as shown.

Diagram 11 6 or 7-pin SFIC

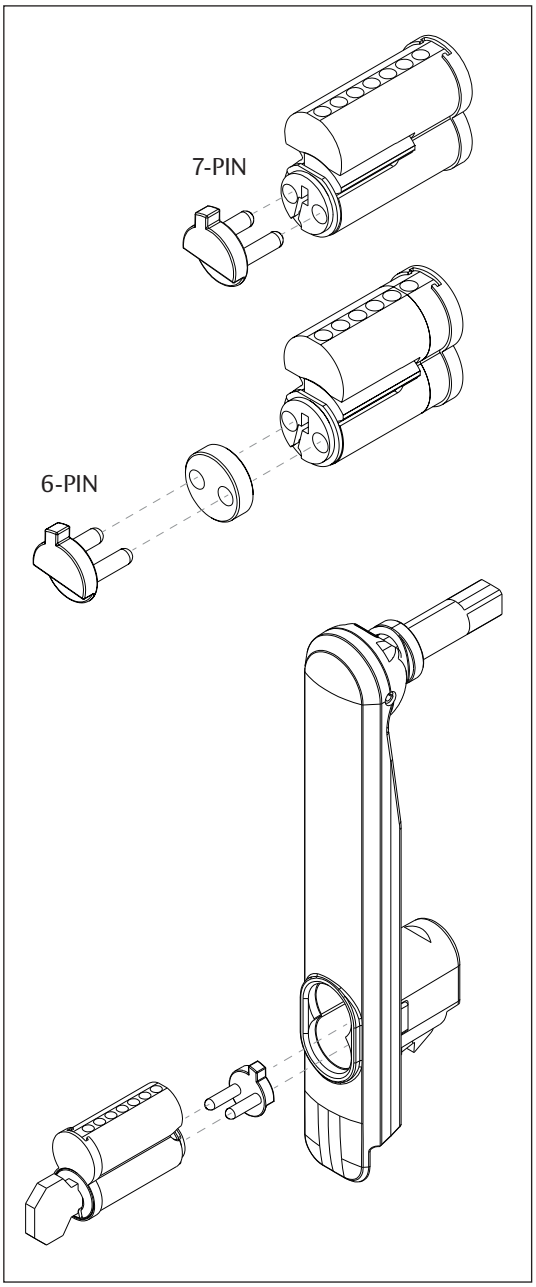

Connections & Wiring

Diagram 12 Server Cabinet Wiring Example

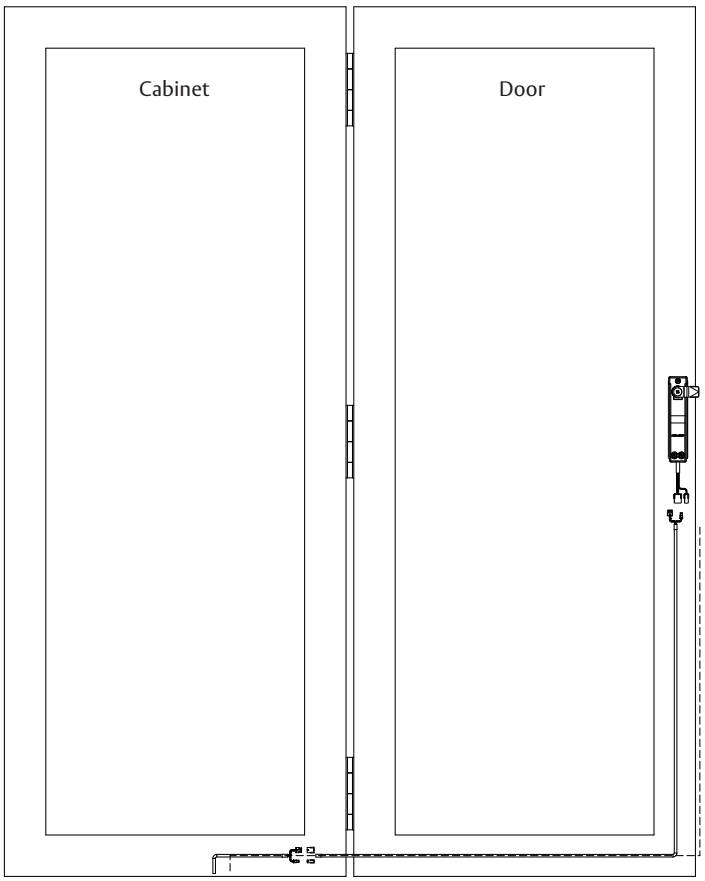

CBL12-QC12, 12 ft System Side Interface Cable to EAC Panel Connection

CBL6-QC12, 6 ft Door Interface Cable

Optional Accessories *(Sold Separately)*

CBL6-QC12
6-foot x 12-Wire Door Interface Cable (ElectroLynx connectors on both ends). Designed for use with the CBL12-QC12.

CBL12-QC12
12-foot x 12-Wire System Side Interface Cable (ElectroLynx connectors on one end, pins and loose connectors on opposite end). Designed for use with the CBL6-QC12.

Accessory Harness Kit
Contains 6-inch interface cable and 20-foot unlock cable for use with KS210 control. (Contact Factory for Ordering)

NOTE: Harnesses in this kit have color coded heat shrink for proper orientation of the cables (white to white and black to power supply).

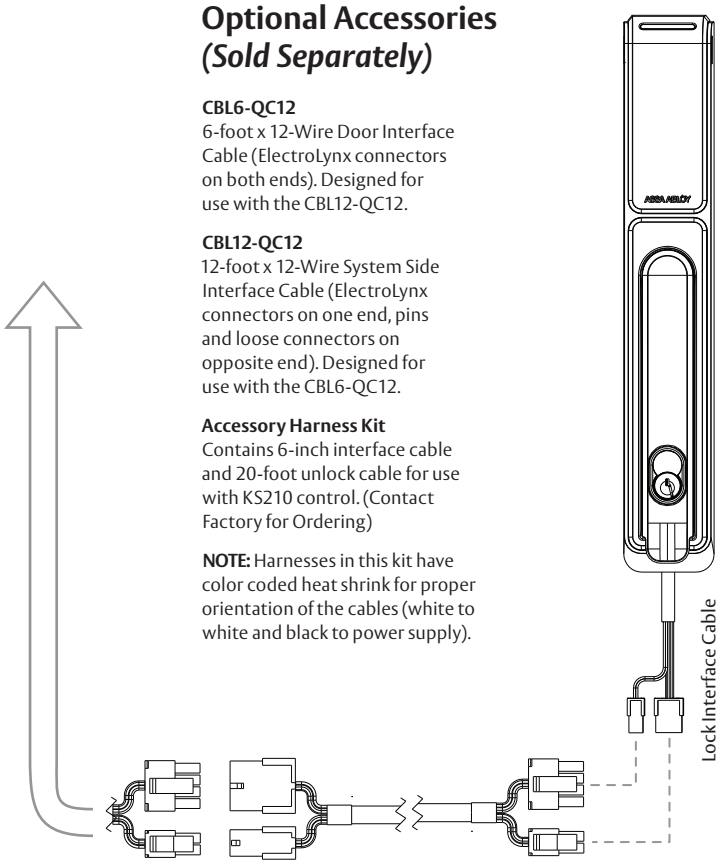

6 ft Door Interface Cable *(CBL6-QC12)*

ATTENTION: Installation wiring for the product and wiring methods shall be in accordance with the National Electrical Code (NEC), ANSI/NFPA 70. Observe precautions for handling electrostatic sensitive devices.

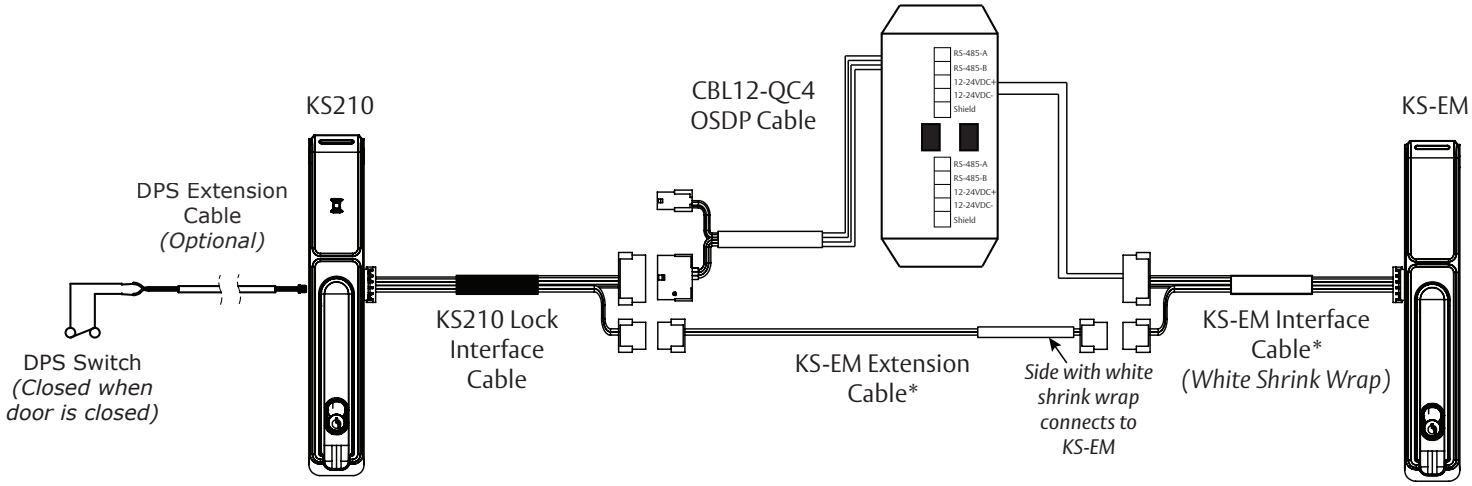

* Part of CBL-QCKS-D Accessory Harness Kit *(Sold Separately)*

Cable & Wire Connections

EAC Integrated Wired: KS200/KS210 Server Cabinet Locks, ElectroLynx® Wire Color/Function Assignments

KS-EM 4-Wire Layout and Configuration

4-PIN MOLEX	WIRE COLOR	FUNCTION	SIGNAL
1	Violet	Lock	COM (–)
2	Pink	Tamper/Locked State/DPS	
3	Gray	Lock	NO (+)
4	Tan	Tamper/Locked State/DPS	

8-PIN MOLEX	WIRE COLOR	FUNCTION	SIGNAL
1	Black	Power	(–)
2	N/A	N/A	Not Used
3	N/A	N/A	Not Used
4	N/A	N/A	Not Used
5	Red	Power	(+)
6	N/A	N/A	Not Used
7	N/A	N/A	Not Used
8	N/A	N/A	Not Used

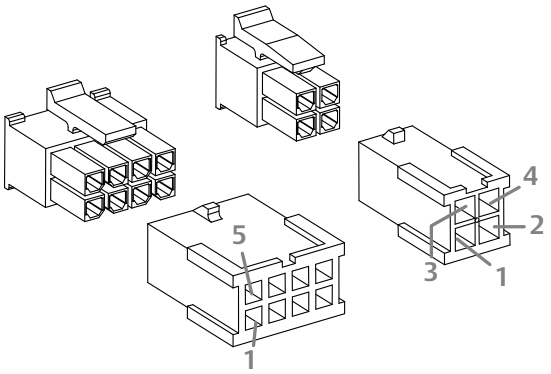

Diagram 13 KS-EM Wiring Diagram for Standard Applications

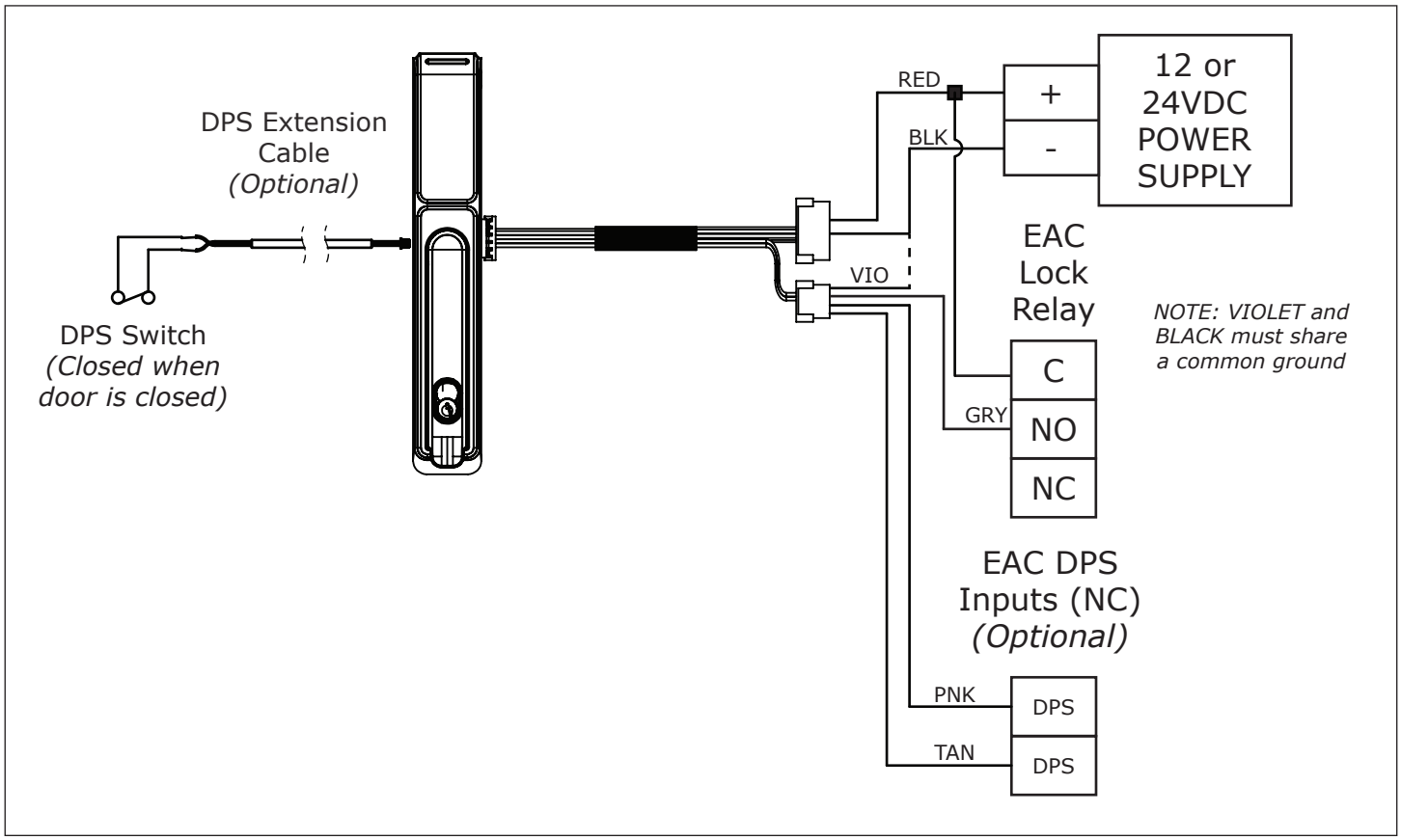

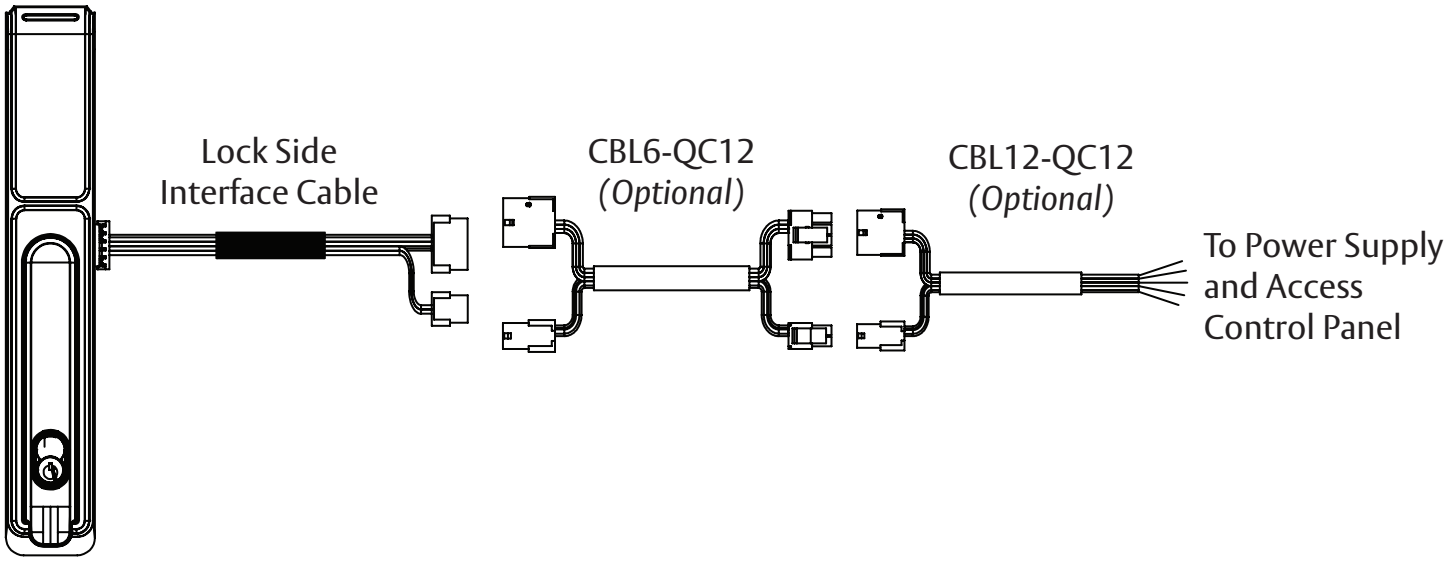

Optional Quick Connect

(Sold Separately)

1. CONNECT the Lock Side Interface Cable to the optional 6 ft Door Interface Cable (CBL6-QC12).

   NOTE: SEE Server Cabinet Wiring Example, **Diagram 12**.

2. CONNECT the Door Interface Cable to the additional optional 12 ft System Side Interface Cable (CBL12-QC12).

   NOTE: 18 ft TOTAL wire run when BOTH optional interface cables are utilized.

3. RUN the 12 ft System Side Interface Cable, as required.
4. ATTACH the included 4-Pin and 8-Pin Female Molex Connectors to the bare wire side of the System Side Interface Cable to extend the interface cable for installations that require longer than 18 ft.

System Side Connections

NOTE: Installation wiring for the product and wiring methods shall be in accordance with the National Electrical Code (NEC), ANSI/NFPA 70.

5. CONNECT the bare wires as required, to the 3rd party wiring, using the contact closure control to connect to the electronic access control system.
6. ENSURE the following power cabling guidelines are followed:

WIRE AWG	SUPPLY VOLTAGE	MAX WIRE RUN (FT)*
20 AWG	12VDC	750
	24VDC	5300
22 AWG	12VDC	450
	24VDC	3300
24 AWG	12VDC	300
	24VDC	2000

*Round trip loss. V = 2*I*R*xft → xft = V / (2*I*R)

Testing & Commissioning

PRIOR to applying power.

1. VERIFY that the SFIC (Small Format Interchangeable Core) cylinder has been installed. If so, verify mechanical actuation of locking cam allowing for emergency override.
2. VERIFY that the handle has been returned to the secure/locked state; ensure the door is closed with the locking cam engaging the cabinet and the handle fully seated in the lock body.
3. APPLY power to the system to verify electronic functionality.
4. VERIFY that the LED is illuminated with the correct RED (secure) or GREEN (unsecure) color displaying while in the respective state.
5. LIFT the handle and ROTATE in the direction of the door hinges to open the cabinet.
   - » VERIFY that the Tamper/Locked State/DPS has changed to a non-secure state.
6. RETURN the handle to the secure/locked state; ensure the door is closed with the locking cam engaging the cabinet and the handle full seated in the lock body.
   - » VERIFY that the Tamper/Lock State/DPS contacts change to a secure state (Secure = Closed contact).

Regulatory

FCC

This device complies with part 15 of the FCC Rules. Operation is subject to the following two conditions: (1) This device may not cause harmful interference, and (2) this device must accept any interference received, including interference that may cause undesired operation.

CAUTION: Any changes or modifications to this device not explicitly approved by the manufacturer could void your authority to operate this equipment.

This equipment has been tested and found to comply with the limits for a Class B digital device, pursuant to part 15 of the FCC Rules. These limits are designed to provide reasonable protection against harmful interference in a residential installation. This equipment generates, uses and can radiate radio frequency energy and, if not installed and used in accordance with the instructions, may cause harmful interference to radio communications. However, there is no guarantee that interference will not occur in a particular installation. If this equipment does cause harmful interference to radio or television reception, which can be determined by turning the equipment off and on, the user is encouraged to try to correct the interference by one or more of the following measures:

- Reorient or relocate the receiving antenna.
- Increase the separation between the equipment and receiver.
- Connect the equipment into an outlet on a circuit different from that to which the receiver is connected.
- Consult the dealer or an experienced radio/TV technician for help.

Canada Radio Certification

This device complies with Industry Canada license-exempt RSS standard(s). Operation is subject to the following two conditions: (1) this device may not cause interference, and (2) this device must accept any interference, including interference that may cause undesired operation of the device.

Le présent appareil est conforme aux CNR d'Industrie Canada applicables aux appareils radio exempts de licence. L'exploitation est autorisée aux deux conditions suivantes : (1) l'appareil ne doit pas produire de brouillage, et (2) l'utilisateur de l'appareil doit accepter tout brouillage radioélectrique subi, même si le brouillage est susceptible d'en compromettre le fonctionnement.

CE Marking

Hanchett Entry Systems, Inc. (HES) hereby declares that these proximity readers are in compliance with the essential requirements and other relevant provisions of Directive 2014/53/EU.

Por el presente, HES, Inc. declara que estos lectores de proximidad cumplen con los requisites esenciales y otras disposiciones relevantes de la Directiva 2014/53/EU.

HES, Inc. déclare par la présente que ces lecteurs à proximité sont conformes aux exigences essentielles et aux autres stipulations pertinentes de la Directive 2014/53/EU.

HES, Inc., por meio deste, declara que estes leitores de proximidade estão em conformidade com as exigências essenciais e outras condições da diretiva 2014/53/EU.

HES, Inc. bestätigt hiermit, dass die Leser die wesentlichen Anforderungen und anderen relevanten Bestimmungen der Richtlinie 2014/53/EU erfüllen.

HES, Inc. dichiara che i lettori di prossimità sono conformi ai requisiti essenziali e ad altre misure rilevanti come previsto dalla Direttiva europea 2014/53/EU.

Warranty

For information on warranty coverage and replacement options, please visit **hesinnovations.com/warranty**

h.e.s. ASSA ABLOY

techsupport.hes@assaabloy.com
hesinnovations.com | 800 626 7590

Printed in the U.S.A.
Patent pending and/or patent www.assaabloydss.com/patents
Copyright © 2025, Hanchett Entry Systems, Inc., an ASSA ABLOY Group company.
All rights reserved. Reproduction in whole or in part without the express written permission of Hanchett Entry Systems, Inc. is prohibited. 3085006.005_3