Fiber Solution

NetWaySP2BT Series

802.3bt Media Converter/Injectors

Models Include:

NetWaySP2BT
- 802.3bt Media Converter/Injector
- Modular plastic case.

NetWaySP2BTWPN
- 802.3bt Media Converter/Injector.
- NEMA4/4X rated outdoor enclosure.

NetWaySP2BTWP
- 802.3bt Media Converter/Injector with Integral Power.
- NEMA4/4X rated outdoor enclosure.

NetWaySP2BTWPX
- 802.3bt Media Converter/Injector with Integral Power.
- NEMA4/4X rated outdoor enclosure.
- Accommodates up to four (4) 12VDC/4AH batteries.

Installation Guide

Altronix®

More than just power.™

DOC#: NetWaySP2BT Rev. 012925

Installing Company: _____ Service Rep. Name: _____

Address: _____ Phone #: _____

Overview:

Altronix NetWaySP2BT Series 802.3bt media converter/injectors provide two (2) 802.3bt (4PPoE) ports up to 180W total and accommodate Fiber (1000Base-X/SX/LX) or structured cable to transmit data. Units can be deployed with structured cable, conventional single/multimode fiber or composite cable (fiber + copper combined). Cameras/edge devices may be located up to 100m from the unit.

Features:

Agency Listings:

- CE European Conformity.

Input:

- **NetWaySP2BT and NetWaySP2BTWPN:**
  48-56VDC @ 3.5A (180W).
  See pg. 4 for recommended Power Sourcing Equipment.
- **NetWaySP2BTWP and NetWaySP2BTWPX:**
  115VAC, 60Hz, 2.5A or 230VAC, 50/60Hz, 1.3A

Fiber Port:

- One (1) 1Gb SFP port.
  See below for recommended SFP modules.

PoE/Data Ports:

- Two (2) ports rated up to 90W max. each.
- IEEE 802.3af, 802.3at and 802.3bt compliant.
- Connectivity: RJ45, auto-crossover.
- Wire type: 4-pair CAT5e and higher.
- Speed: 10/100/1000 Mbps.
- Distance: up to 100m.

Battery Backup (NetWaySP2BTWP and NetWaySP2BTWPX):

- 24VDC charging circuit charges $LiFePO_4$ (Lithium Iron Phosphate) or sealed lead acid or gel type batteries.
- Automatic switch over to stand-by battery when AC fails.

Environmental:

- *Refer to Environmental Conditions on page 5.*

LED Indicators (Refer to Fig. 1, Pg. 4):

- **Yellow and Green LEDs** (RJ45 jacks):
  Yellow (left) LED: 10/100 Mbps.
  Green (right) LED: 1000 Mbps.
- **Green PoE LEDs:** Indicate PoE present.
- **Green SFP (Fiber) LED:** Indicates SFP connection.

Mechanical:

NetWaySP2BT:

- Modular plastic case.
  3.375” x 3.8” x 1” (85.7mm x 96.5mm x 25.4mm).

NetWaySP2BTWPN:

- NEMA4/4X, IP66 Rated enclosure for outdoor use.
- Dimensions (H x W x D approx.):
  9.5” x 7.32” x 4.92”
  (241.3mm x 185.9mm x 125mm)

NetWaySP2BTWP:

- NEMA4/4X, IP66 Rated enclosure for outdoor use.
- Dimensions (H x W x D approx.):
  13.31” x 11.31” x 5.59”
  (338.1mm x 287.3mm x 142mm).

NetWaySP2BTWPX:

- NEMA4/4X, IP66 Rated enclosure for outdoor use.
- Accommodates four (4) 12VDC/4AH batteries (48V of backup).
- Dimensions (H x W x D approx.):
  17.53” x 15.3” x 6.67”
  (445.3mm x 388.6mm x 169.4mm).

Recommended Altronix SFP Modules:

Altronix P1MM, P1SM10, P1AB2K and P1GCE are hot-pluggable SFP fiber transceiver modules and are readily usable with all Altronix Spectrum fiber optic equipment for 1Gb transmission rates.

P1MM	For use with Multi-Mode Fiber for distances up to 550m.
P1SM10	For use with Single-Mode Fiber for distances up to 10km.
P1AB2K	For use with Single Strand Single-Mode Fiber for distances up to 2km.
P1GCE	For use with CAT5e or better for distances up to 100m.

Recommended Altronix Power Sourcing Equipment (for NetWaySP2BT and NetWaySP2BTWPN):

NetWaySP4P	Ethernet to Fiber Media Converter with Integral Power Supply/Charger. Four (4) 56VDC non power-limited outputs up to 120W max. full power per port (240W total power). Four (4) 1Gb SFP ports.
NetWaySP4PX	Ethernet to Fiber Media Converter with Integral Power Supply/Charger. Four (4) 56VDC non power-limited outputs up to 120W max. full power per port (480W total power). Four (4) 1Gb SFP ports.
NetWaySP4P2	Ethernet to Fiber Media Converter with Integral Power-Limited Power Supply/Charger. Four (4) 56VDC power-limited outputs up to 60W max. full power per port (240W total power). Four (4) 1Gb SFP ports.
WayPoint562	High Current Outdoor Power Supply/Charger. 56VDC/120W output. Filtered and electronically regulated output. Short circuit and thermal overload protection.
Vertiline563	EIA 19" 1U Rack Mountable Dual Independent Power Supply/Charger. Two (2) 56VDC @ 3A each filtered and electronically regulated outputs. Short circuit and thermal overload protection.
POE201, POE240 POE360, POE367	Power Supply/Charger Boards. 56VDC/120W (POE201), 56VDC/240W (POE240) or 56VDC/360W (POE360 or POE367) filtered and electronically regulated output. Short circuit and thermal overload protection.

Installation Instructions:

Wiring methods shall be in accordance with the National Electrical Code/NFPA 70/ANSI, and with all local codes and authorities having jurisdiction. All units should be installed by a trained service personnel.

Installation (NetWaySP2BT):

1. Mount NetWaySP2BT in desired location utilizing the mounting hole *(Fig. 3a, pg. 4)*. Use a proper fastener and/or wall anchor when securing NetWaySP2BT with screw through its mounting hole to the surface.
   Note: Earth ground can be used, if needed, for high transient or outdoor environments.
   If used, insert an Earth ground wire (included with product) into the internal ground terminal until secured (a slight tug can check stability) & fasten the free end to a chassis earth ground.
   If earth ground is not attached and needed, refer to Fig. 1, pg. 4 for manual placement.

Installation (NetWaySP2BTWPN, NetWaySP2BTWP, NetWaySP2BTWPX):

2. Remove backplane from enclosure prior to drilling. Do not discard hardware.
   Note: Make sure that hardware will not interfere with components of the circuit board.
3. Mark and drill desired inlets on the enclosure to facilitate wiring. Maximum NEMA type 4X rated fittings to be used are 0.5". Follow manufacturer's specifications for the appropriate size opening.
   Note: Inlets for conduit fittings should only be made on the bottom of the enclosure.
   To facilitate wire entry utilize weather-tight NEMA rated connectors *(supplied)*, bushings, and cable.
4. Clean out the inside of enclosure before remounting circuit boards/backplane.
5. Mounting NEMA4/4X rated enclosure *(Enclosure Dimensions, pg. 10-12)*:
   Wall mount: Mount unit in desired location. Mark and drill holes to line up with the top and bottom hole of the enclosure flange. Secure enclosure with appropriate fasteners (e. g. screws and anchors; bolts and locking nuts, etc.) that are compatible with mounting surface and are of sufficient length/construction to ensure a secure mount *(Fig. 7, pg. 9)*.
   Pole Mount: *Refer to Fig. 8 - 12, pg. 9*.
6. Mount backplane in enclosure with hardware.

Power Connection (NetWaySP2BT and NetWaySP2BTWPN):

1. Use external 48-55V UL Listed ITE power supply, carefully observing correct polarity *(Fig. 1, pg. 4)*.
2. Use 14AWG or larger for all power connections.

Power Connection (NetWaySP2BTWP and NetWaySP2BTWPX):

1. Connect AC power from overcurrent protective device circuit breaker (20A @ 115VAC, 60Hz or 16A @ 230VAC, 50/60Hz) to the terminals marked [L, N] on power supply board *(Fig. 5, 6, pg. 7, 8)*. Connect ground lug to earth or green branch wire on backplane (12AWG min.). Use 14AWG or larger for all power connections (Battery, DC output, AC input).
2. **Battery Backup:** When the use of stand-by batteries is desired, they must be $LiFePO_4$, sealed lead acid or gel type. Connect two (2) 12VDC batteries wired in series or one (1) 24V battery to terminals marked [– BAT +] *(Fig. 5, 6)*, carefully observing polarity (battery leads are included).
   When batteries are not used, a loss of AC will result in the loss of output voltage.
   Note: When using two 12V $LiFePO_4$ (lithium iron phosphate) batteries, check with manufacturer specifications that batteries can be connected in series.
   For outdoor battery backup, battery enclosure must have sufficient ventilation. Use Altronix Vent2 kit. Please ensure that the cover is secured with latches and optional Altronix Lock1WP for **NetWaySP2BTWP/NetWaySP2BTWPX/NetWaySP2BTWPN.**

Input/Data Connections:

1. Connect structured cable from port marked [Data Port] on NetWaySP2BT to a PoE midspan/endspan *(Fig. 1, pg. 4)*.
2. Connect fiber optic cable to a fiber SFP module. Connect the module to the port marked [SFP] on the NetWaySP2BT. Connect the other end of fiber cable to an SFP module of a remote device. SFP LED will illuminate indicating data connection *(Fig. 1, pg. 4)*.
3. Using 4-pair CAT5e or higher cable connect PoE load devices to be powered to the ports marked [802.3bt Output] on NetWaySP2BT. After authentication and classification have been established, [PoE Signal] LED will illuminate indicating PoE presence.

Fig. 1

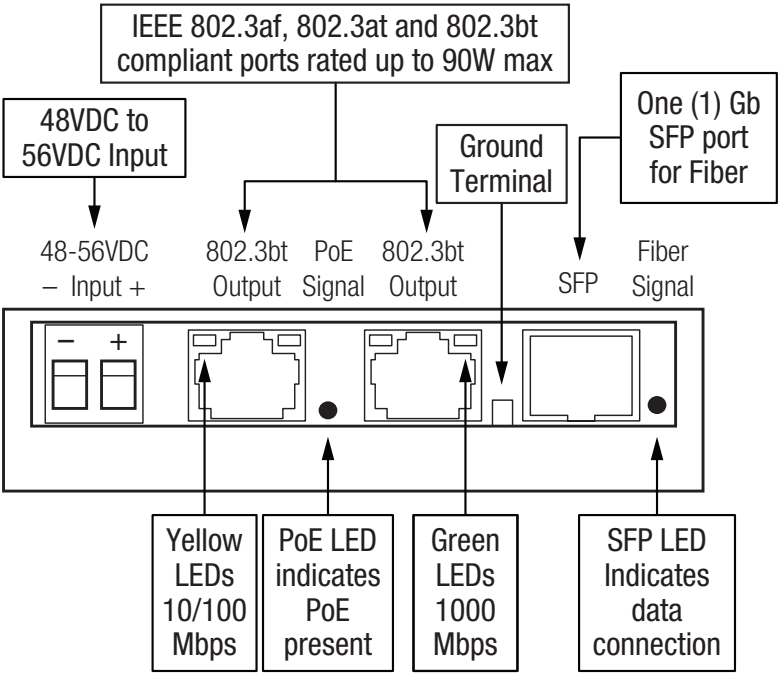

Typical Application:

Fig. 2

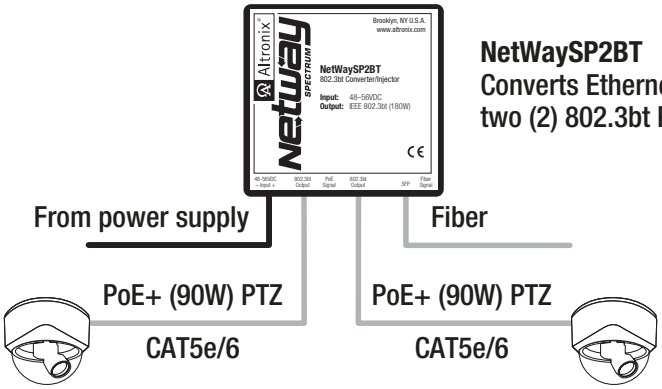

NetWaySP2BT
Converts Ethernet or Fiber to two (2) 802.3bt PoE ports

Technical Specifications:

Parameter	Description		
Ports	One (1) 1Gb SFP port, one (1) Data port. Two (2) IEEE 802.3af, 802.3at and 802.3bt compliant output ports rated up to 90W max.		
Input Power Requirements	**NetWaySP2BT and NetWaySP2BTWPN:** 48-56VDC @ 3.5A (180W). *See pg. 3 for recommended Power Sourcing Equipment.* **NetWaySP2BTWP and NetWaySP2BTWPX:** 115VAC, 60Hz, 2.5A or 230VAC, 50/60Hz, 1.3A.		
Indicators	**Yellow and Green LEDs (RJ45 jacks):** IP Link status, 10/100/1000 Base-T/active. **PoE Green LED:** Indicates PoE present. **Fiber Signal Green LED:** Indicates SFP connection.		
Evironmental Conditions	**Temperature:** **NetWaySP2BT:** **Operating (180W):** – 40ºC to 75ºC (– 40ºF to 167ºF). **Storage:** – 40ºC to 75ºC (– 40ºF to 167ºF). **NetWaySP2BTWPN, NetWaySP2BTWP and NetWaySP2BTWPX:** **Operating:** **60W:** – 40ºC to 75ºC (– 40ºF to 167ºF). **90W:** – 40ºC to 60ºC (– 40ºF to 140ºF). **180W:** – 30ºC to 60ºC (– 22ºF to 140ºF). **Storage:** – 40ºC to 85ºC (– 40ºF to 185ºF). **Relative Humidity:** 85% +/–5%. **Operating Altitude:** – 304.8 to 2,000m.		
Regulatory Compliance	CE European Conformity.		
Weights (approx.)	**Model**	**Product Weight**	**Shipping Weight**
	NetWaySP2BT	0.25 lb. (0.11 kg)	0.3 lb. (0.14 kg)
	NetWaySP2BTWPN	3.7 lb. (1.68 kg)	5 lb. (2.27 kg)
	NetWaySP2BTWP	10.5 lb. (4.76 kg)	11.9 lb. (5.4 kg)
	NetWaySP2BTWPX	15 lb. (6.8 kg)	17.5 lb. (7.9kg)

Fig. 3 - **NetWaySP2BT**

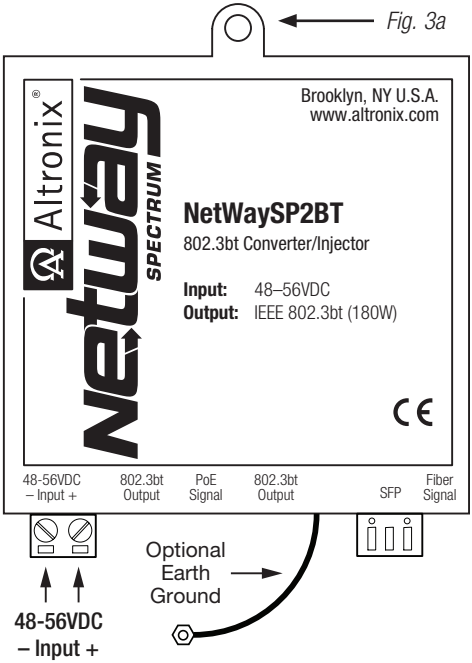

Fig. 4 - **NetWaySP2BTWPN**

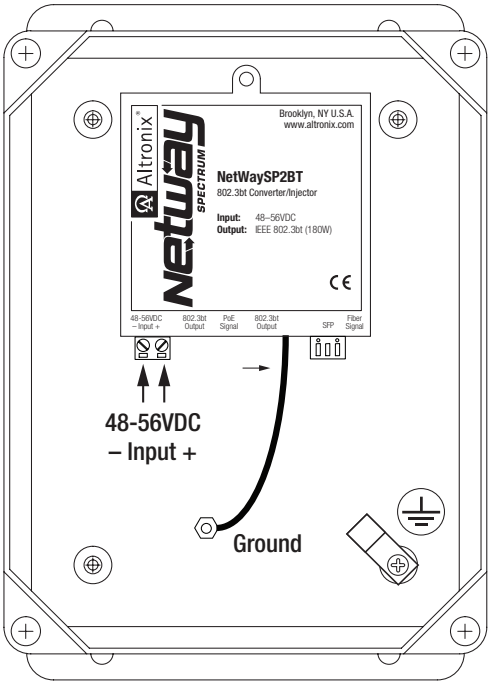

Fig. 5 - **NetWaySP2BTWP**

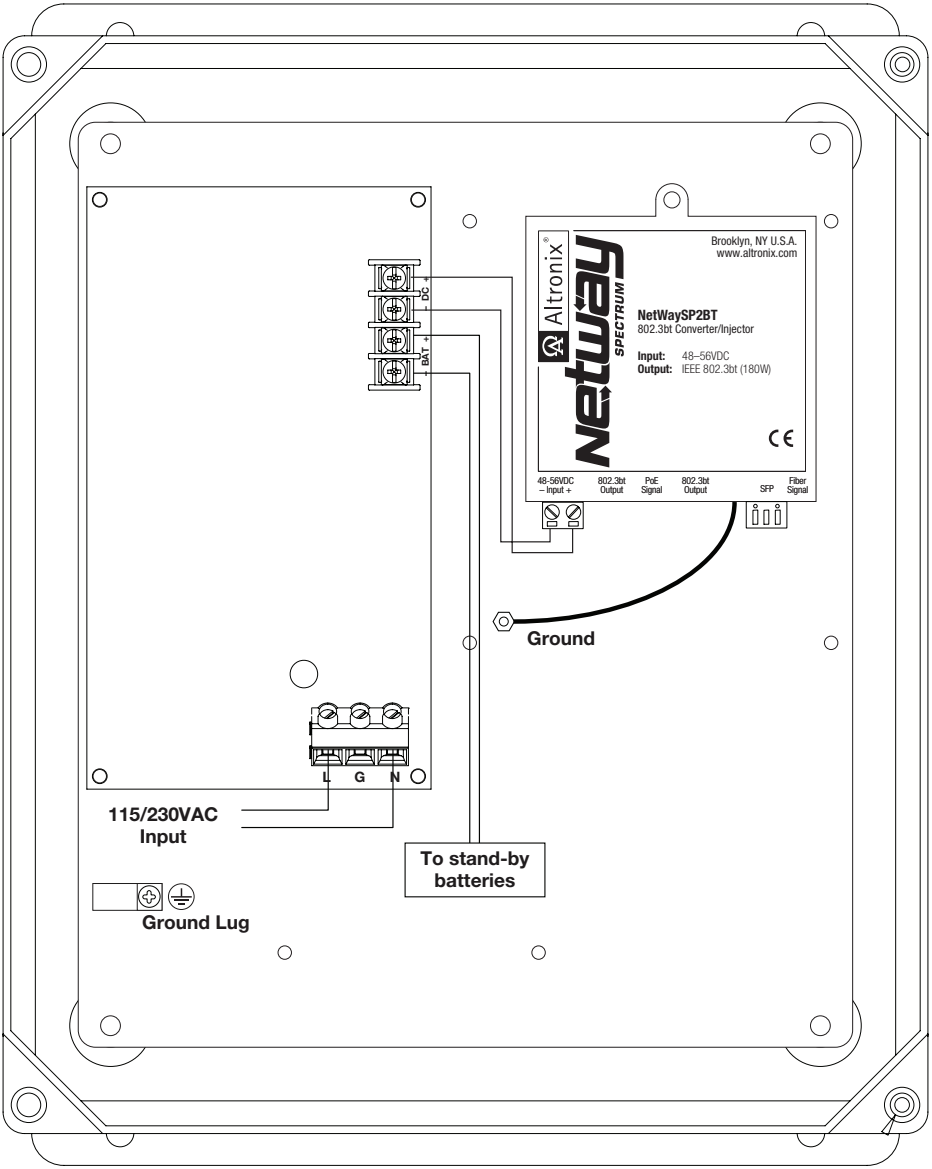

Fig. 6 - **NetWaySP2BTWPX**

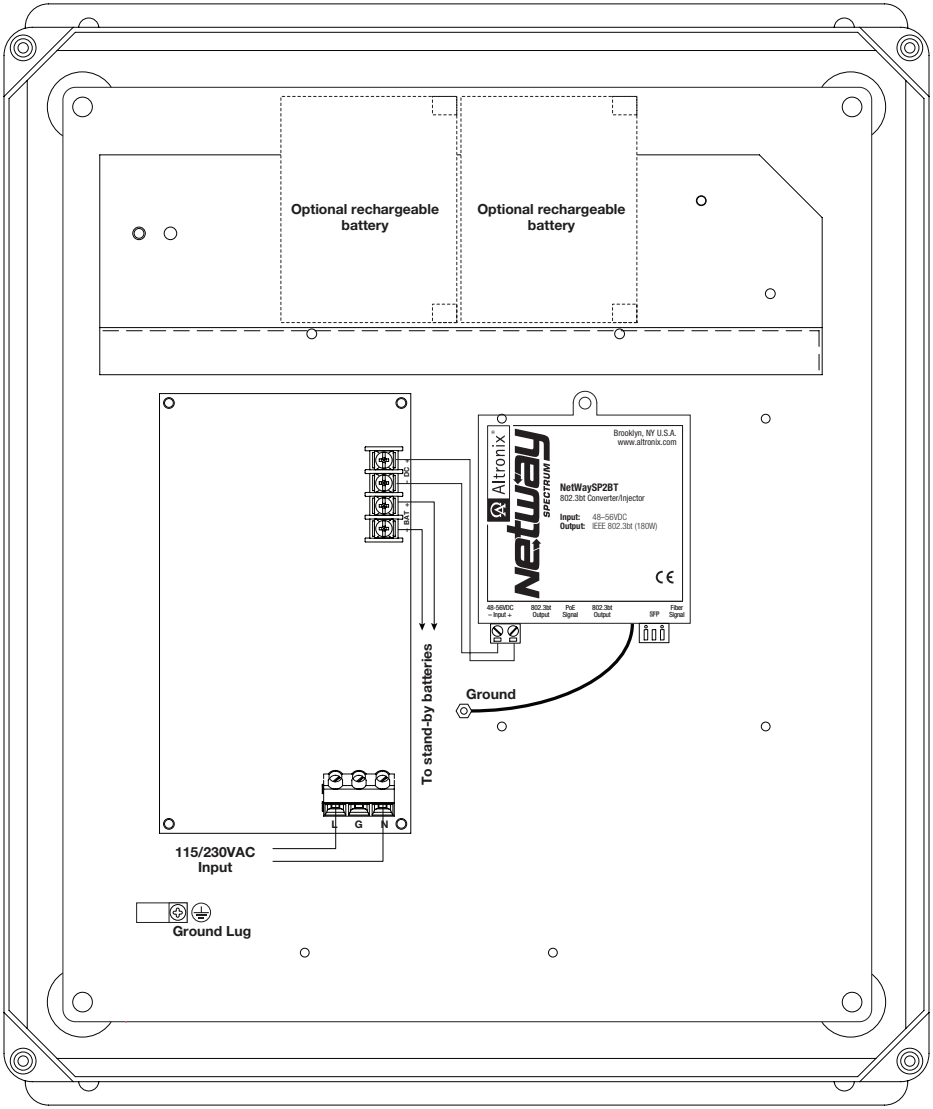

Wall Mount Installation:

1- Place unit at desired location and secure with mounting screws *(not included) (Fig. 7, pg. 9).*

Fig. 7

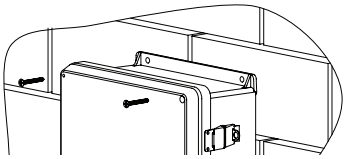

Pole Mounting Using Optional Pole Mount Kit

PMK1 (NetWaySP2BTWPN, NetWaySP2BTWP) **or PMK2** (NetWaySP2BTWPX)**:**

This installation should be made by qualified service personnel. This product contains no serviceable parts. PMK1 and PMK2 outdoor pole mount kits are designed to simplify the installation of Altronix outdoor rated power supplies and accessories housed in models WP1, WP2, WP3 and WP4 NEMA rated enclosures. PMK1 and PMK2 can be mounted on 2” to 8” (50.8mm to 203.2mm) diameter round or 5” (127mm) square poles. Brackets are designed for use with the Wormgear Quick Release Straps (two included).

1. Thread one (1) wormgear quick release strap through the slots on the back of a mounting bracket *(Fig. 6, pg. 8)*.
2. Once the desired height of the top Pole Mount bracket is achieved, tighten the straps down by sliding open end of the strap through the locking mechanism on the strap, then tighten the screw with flat head screwdriver or 5/16” hex socket driver *(Fig. 8, pg. 9 and Fig. 9, pg. 9)*.

Fig. 8

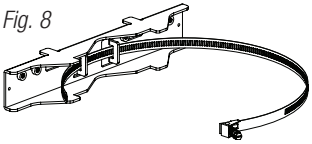

Fig. 9

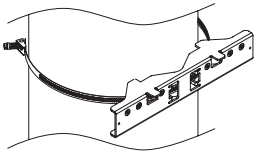

Fig. 10

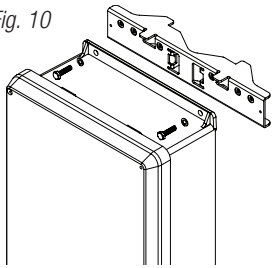

3. Attach the bottom bracket to the enclosure by inserting bolts through the flange of the enclosure and into the bracket, tightening bolts with a 7/16” hex socket *(Fig. 10, pg. 9)*.
4. Thread the second wormgear quick release strap through the slots on the back of the bottom mounting bracket *(Fig. 11, pg. 9)*.
5. Mount enclosure onto the top bracket by inserting bolts through flange of the enclosure and into the bracket, tightening bolts with a 7/16” hex socket *(Fig. 9, pg. 9)*.
6. Tighten the straps of the bottom bracket down by sliding the open end of the strap through the locking mechanism on the strap, then tighten screw with flat head screwdriver or 5/16” hex socket driver *(Fig. 9, pg. 9)*.
7. Clip excess straps.

Fig. 11

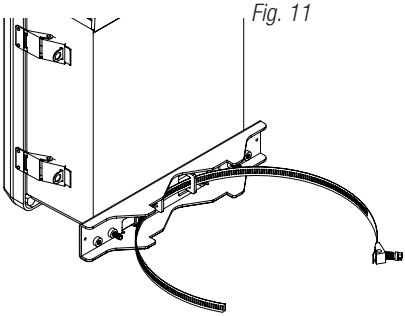

Fig. 12
2” to 8”(50.8mm to 203.2mm) diameter round pole

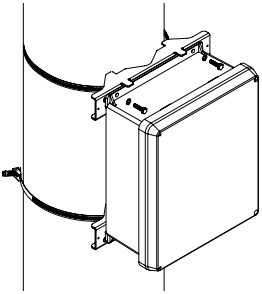

Fig. 12a
5” (127mm) square pole

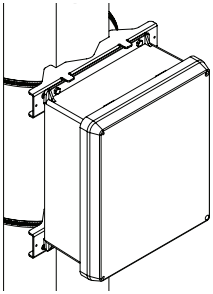

NetWaySP2BTWPN
Mechanical Drawing and Dimensions (H x W x D approx.):

9.5” x 7.32” x 4.92” (241.3mm x 185.9mm x 125mm)

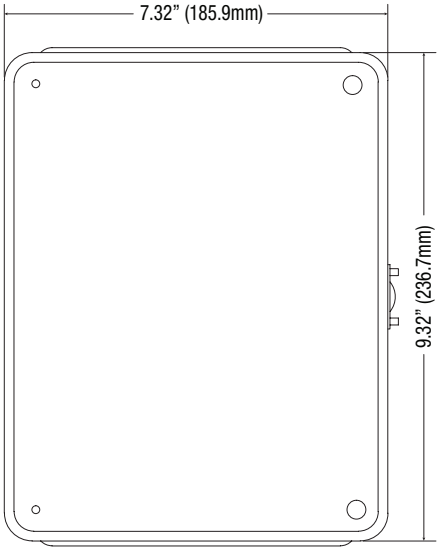

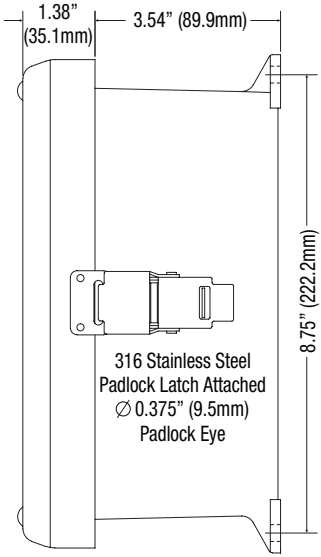

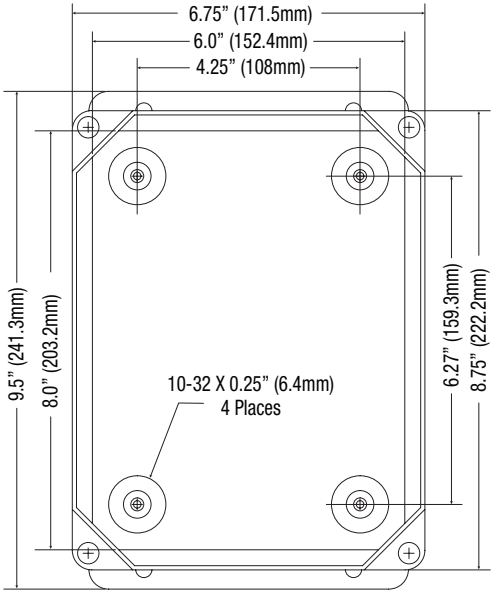

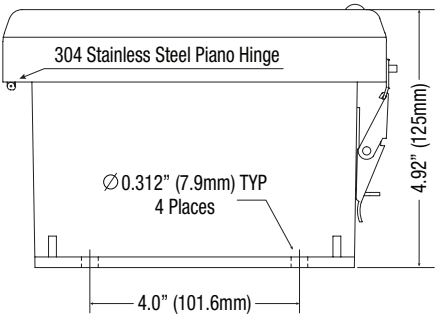

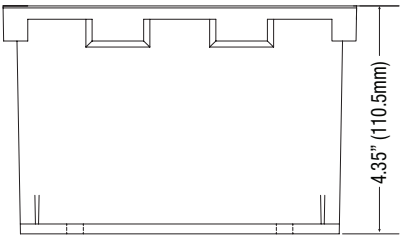

NetWaySP2BTWP
Enclosure Drawing and Dimensions (H x W x D approx.):

13.31” x 11.31” x 5.59” (338.1mm x 287.3mm x 142mm)

FRONT VIEW

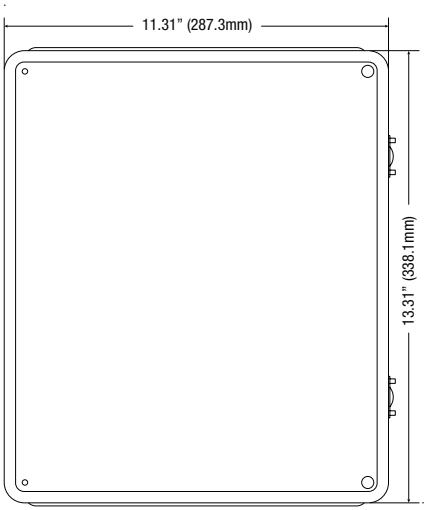

RIGHT SIDE VIEW

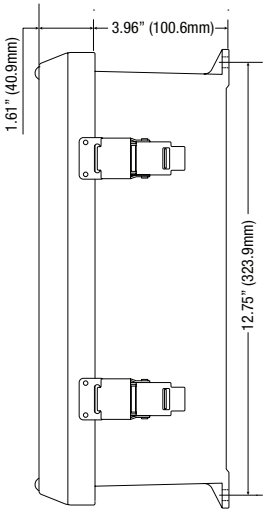

FRONT VIEW COVER REMOVED

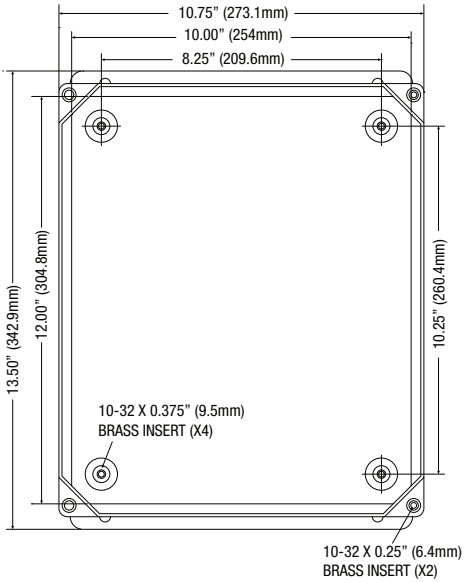

END VIEW

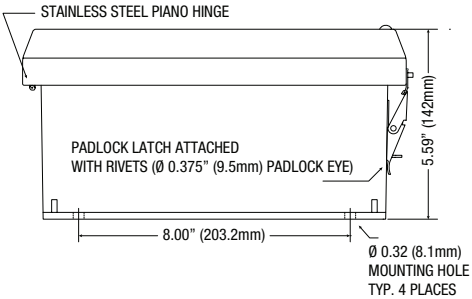

NetWaySP2BTWPX
Mechanical Drawing and Dimensions (H x W x D approx.):

17.53” x 15.3” x 6.67” (445.3mm x 388.6mm x 169.4mm)

FRONT VIEW

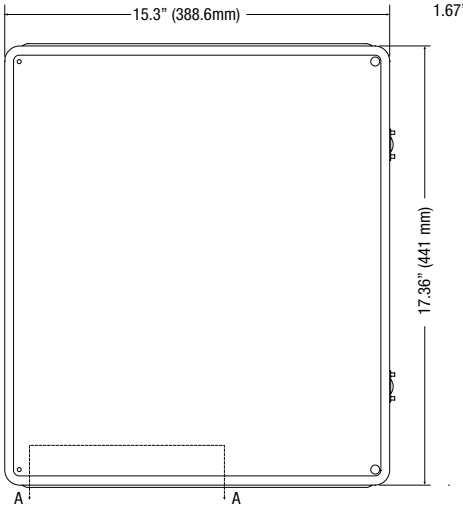

RIGHT SIDE VIEW

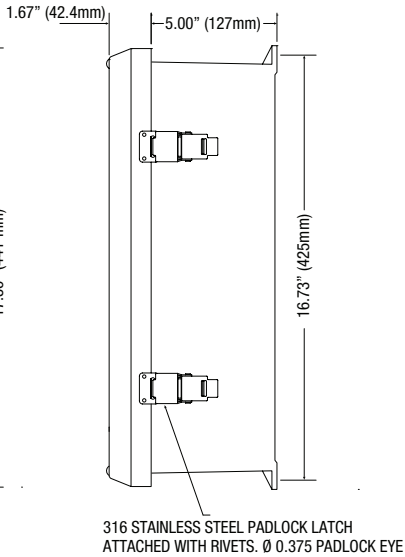

FRONT VIEW COVER REMOVED

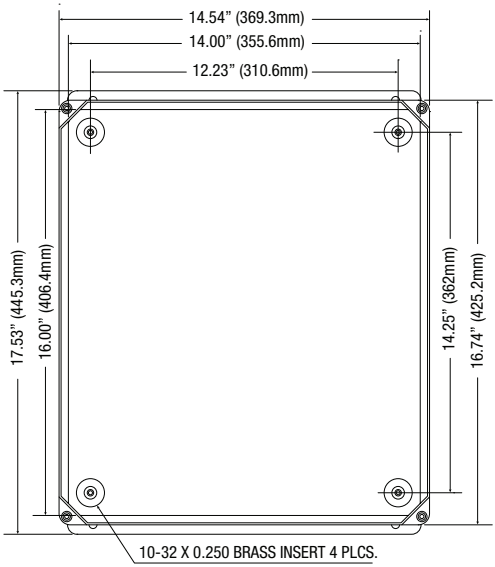

SECTION A-A

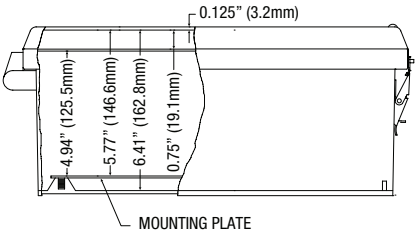
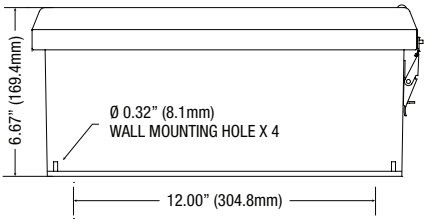
END VIEW