KIDDE™ COMMERCIAL

FIRE ALARM SYSTEMS.
**POWERED BY PARTNERSHIP.***

# OPTICA INTELLIGENT DUCT SMOKE DETECTOR

## KI-DDOS

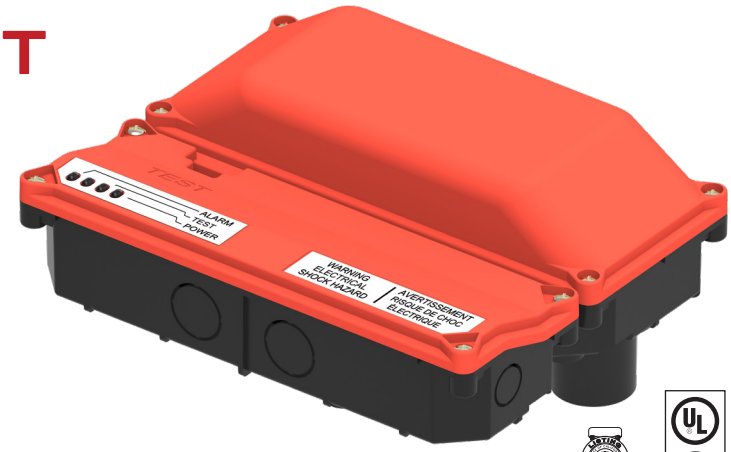


3242-1657:
0527

S853

## OVERVIEW

The Kidde Commercial Intelligent Optica Duct Smoke Detector is the most advanced and most reliable device in its class. Designed for easy installation and superb reliability, Optica duct detectors represent the perfect balance of practical design, advanced technology and robust performance.

**Optica duct detectors** feature a unique design that speeds installation and simplifies maintenance. Separate sensing and control sections, optical sensing tube, conformally coated circuit boards and hydrophilic coatings keep contaminants away from sensitive electronics providing longer service life. When cleaning is required, the assemblies come apart easily and snap back together in seconds.

The optical sensing tube incorporates many of the same principles used in the Optica detector. This sensor inherits the power and benefits of this exceptional technology.

Optica duct sensors gather analog information from their smoke sensing elements and convert it into digital signals. The sensor measures and analyzes these signals and compares the information to historical readings and time patterns to make an alarm decision. Digital filters and algorithms remove signal patterns that are not typical of fires, which reduces unwanted alarms.

**WARNING:** Duct detectors have specific limitations. Duct detectors are not a substitute for an open area smoke detector. Duct detectors are not a substitute for early warning detection or a replacement for a building's regular fire detection system. Smoke detectors are not designed to detect toxic gases which can build up to hazardous levels in some fires. These devices will not operate without electrical power. As fires frequently cause power interruptions, Kidde Commercial suggests you discuss further safeguards with your local fire protection specialist.

## STANDARD FEATURES

- Less than 2.5" deep for easy installation and applications where space is tight
- -20°F to 158°F (-29°C to 70°C) operating range with 100 ft/min to 4,000 ft/min air velocity rating assures reliability under harsh environmental conditions
- Standard sampling tube spacing for easy drop-in migration from other detectors
- Sampling tube can be installed with or without the cover/sensor in place and can be rotated in 45-degree increments to ensure proper alignment with duct airflow
- 15.2 to 19.95 Vdc operation
- Magnet-activated test switch
- One Form C auxiliary alarm relay for controlling ancillary equipment (e.g., HVAC controls)
- No special tools required for easy access to field connections
- Kidde Intelligent electronic addressing
- Environmental compensation with differential sensing for reliable, stable, and drift-free sensitivity
- Wide 1.5% to 4.5% obscuration/ft. smoke sensitivity
- Identification of dirty or defective detectors

*Kidde Commercial and its authorized resellers/distributors are separate and independent entities. This relationship between vendor and reseller/distributor does not constitute a legal partnership or create any shared liability between companies.

# APPLICATION

Optica duct detectors are ideally suited to duct smoke detection applications where early indication of combustion is required within the confined space of ventilation ductwork. Its primary purpose is to provide early warning of an impending fire and to prevent smoke from circulating throughout the building. It is typically used to detect smoke in the supply side of the HVAC system but can provide sensing of the return side as well.

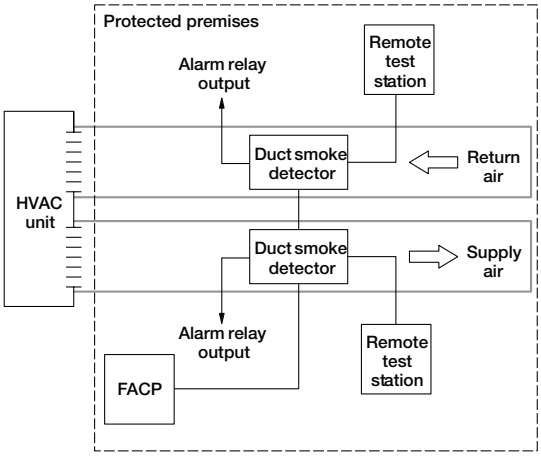


Optica duct detectors continually sample air flow in the HVAC duct and initiate an alarm condition whenever smoke is detected. An alarm is activated when the quantity (percent obscuration) of combustion products in that air sample exceeds the detector's sensitivity setting.

### Kidde Intelligence

The KI-DDOS features electronic addressing and issues a dirty sensor warning when it reaches its preset limit. The dirty sensor warning indicates the sensor is operating within its specified limits but is in need of servicing. When the detector's ability to compensate for environmental changes has reached its limit, the duct smoke detector signals a trouble condition.

The KI-DDOS also uses differential sensing to prevent gradual environmental changes from triggering unwanted alarms. A rapid change in environmental conditions, such as smoke from a fire, causes the detector to signal an alarm state, but dust and debris accumulated over time does not change alarm sensitivity.

Each Kidde Optica duct detector contains a microprocessor that performs comprehensive self-diagnostics and stores the results in nonvolatile memory. Stored results include details such as hours of operation, last maintenance date, and number of alarms and troubles. This information can be retrieved and reviewed when desired.

### Detector Configuration

The detector assembly cover provides easy access to the smoke sensor, its wiring connections, sample and exhaust tubes, and the smoke chamber itself.

Air enters the detector's sensing chamber through a sampling tube (ordered separately) that extends into the duct and is directed back into the ventilation system through an exhaust tube (included). The difference in air pressure between the two tubes pulls the sampled air through the sensing chamber. When a sufficient amount of smoke is detected in the sensing chamber, the detector initiates an alarm.

The sampling tube may be installed from either the duct side of the assembly or from inside the sensor compartment, as preferred by the installer. (The exhaust tube must be installed from the duct side.) Sampling tubes may be rotated in 45-degree increments so that air holes can be aligned to allow the unit to be mounted at virtually any angle relative to the air flow.

In installations where the duct smoke detector's controls and indicators are hidden from view, a remote test station or an LED indicator can be connected to the detector to provide these functions.

### Remote Test Stations

Labor-saving Remote Test/Reset stations provide alarm testing from the convenience of a remote location. Tests can be performed quickly and safely – without having to climb to the roof. Magnetically operated and key-operated one-gang models are available. Kidde Optica duct detectors are also compatible with GSA-LED remote alarm LED.

Air velocity in the duct as low as 100 ft/min. maintains adequate air flow into the sensor smoke chamber through air holes in the air sampling tube and discharges through the exhaust tube. Optica duct air sampling tubes must be installed with the inlet holes facing the airstream. Sampling tubes may be rotated in 45-degree increments so that air holes can be aligned to allow the unit to be mounted in virtually any angle relative to the airflow.

Optica duct sensors are engineered to operate optimally under the harsh environmental conditions frequently found in HVAC ductwork. Nonetheless, before installing the detector, test the duct air velocity, temperature, and humidity to verify that it is within the operating range of the Optica duct detector. Consult the Optica duct installation sheet for details.

# DIMENSIONS

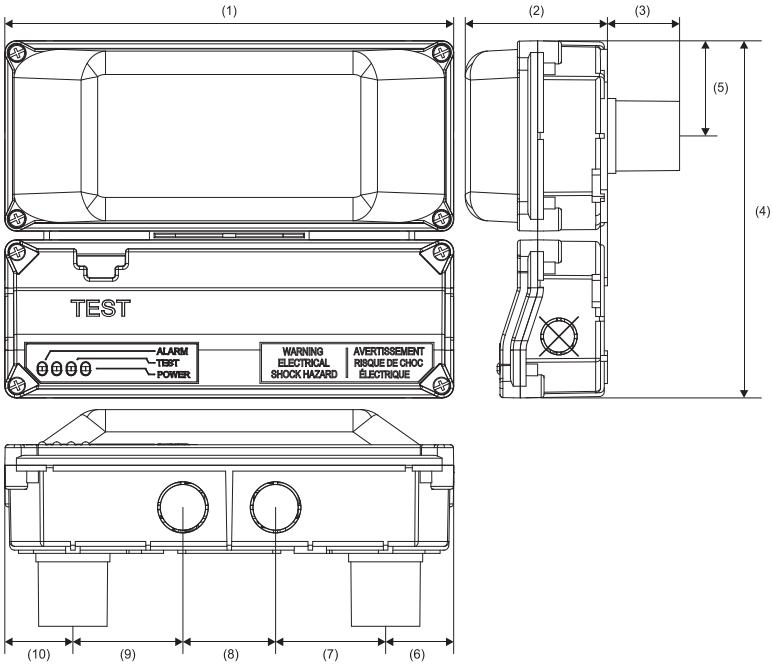


(1) 7.75 in. (16.69 cm)
(2) 2.50 in. (6.35 cm)
(3) 1.25 in. (3.18 cm)
(4) 6.10 in (15.49 cm)
(5) 1.63 in. (4.14 cm)
(6) 1.175 in. (2.98 cm)
(7) 1.90 in. (4.83 cm)
(8) 1.60 in. (4.06 cm)
(9) 1.90 in. (4.83 cm)
(10) 1.175 in. (2.98 cm)

## ASSEMBLY

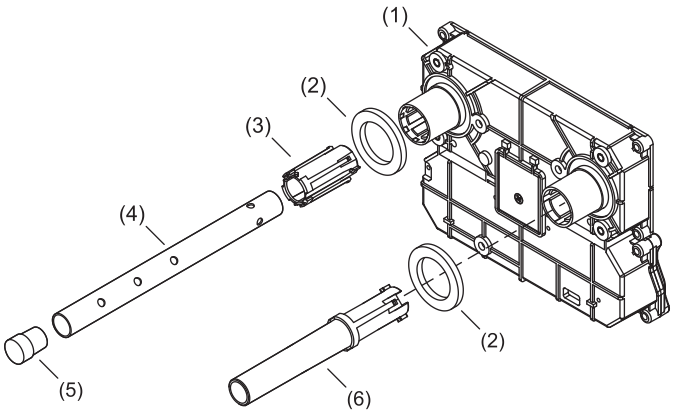


(1) Duct smoke detector
(2) Gasket (2X)
(3) Sampling tube coupling
(4) Sampling tube (ordered separately)
(5) Cap plug
(6) Exhaust tube

## MOUNTING

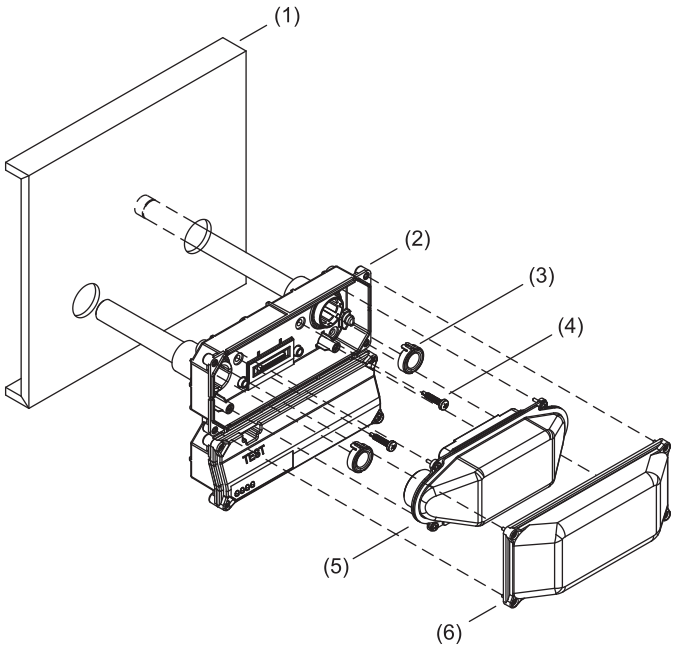


(1) HVAC duct
(2) Duct smoke detector
(3) Bug screens (2X) (optional)
(4) Mounting screws (2X)
(5) Optica tube assembly
(6) Optica tube assembly cover

## WIRING

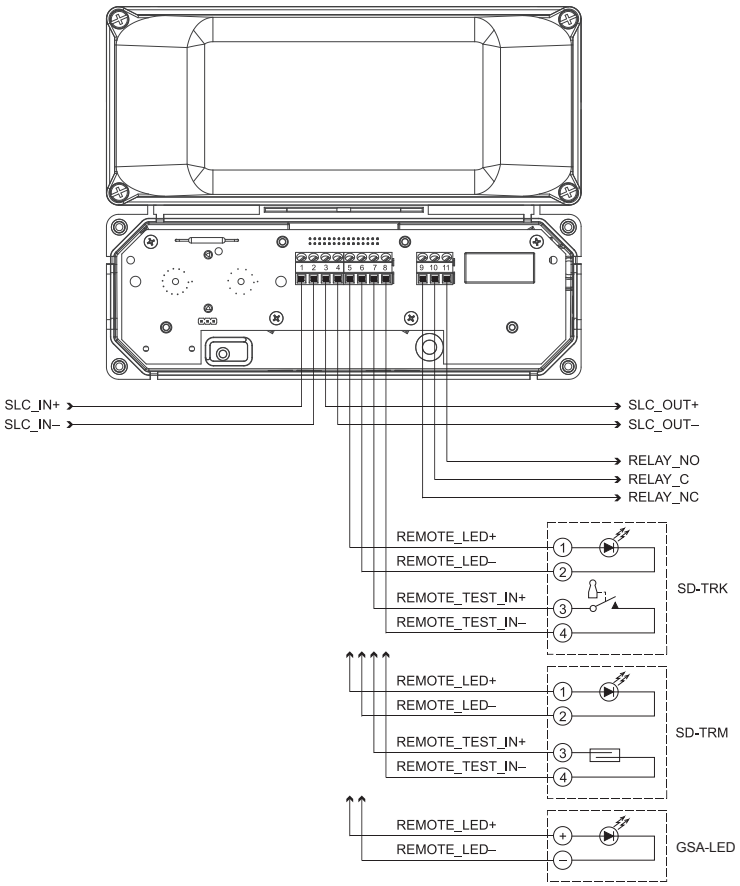


**Terminal block detail**

| Number | Signal name | Number | Signal name |
|---|---|---|---|
| 1 | SLC_IN+ | 7 | REMOTE_TEST_IN+ |
| 2 | SLC_IN− | 8 | REMOTE_TEST_IN− |
| 3 | SLC_OUT+ | 9 | RELAY_NC |
| 4 | SLC_OUT− | 10 | RELAY_C |
| 5 | REMOTE_LED+ | 11 | RELAY_NO |
| 6 | REMOTE_LED− | | |

KIDDE™ COMMERCIAL

FIRE ALARM SYSTEMS.
**POWERED BY PARTNERSHIP.***

## SPECIFICATIONS, DETECTOR

| | |
|---|---|
| Dimensions | 7.75 x 6.1 x 2.5 inches (167 x 155 x 65 mm) |
| Wire size | 14 to 22 AWG |
| Detection method | Photoelectric (light scattering principle) |
| Air velocity rating | 100 to 4,000 ft/min and meets the required minimum air pressure differential |
| Air pressure differential | 0.01 to 0.83 inch of water |
| Sensitivity | 1.5 to 4.5%/ft obscuration |
| Alarm test response time | 5 seconds |
| LED indicators | Alarm (red), Test (amber), Normal (green) |
| Common alarm relay | Unsupervised and power-limited<br>Quantity: 1; Type: Form C<br>Ratings: 3.0 A @30VDC, 3.0A @ 120VAC (.35pf), 1.5A @ 240VAC (.35pf) |
| Operating voltage | 15.2 to 19.95 VDC |
| Operating current | Standby: 50 µA<br>Alarm: 60 µA |
| Operating environment | Temperature (UL/ULC): -20 to 158°F (-29 to 70°C).<br>Relative humidity: 0 to 93%, noncondensing |
| Agency listings | UL, ULC, CSFM, FM |
| Compatible Panels | Kidde Commercial loop controllers |
| Storage temperature | -20 to 158°F (-29 to 70C) |

## SPECIFICATIONS, TEST STATIONS

Remote Test/Reset Stations provide alarm test, trouble indication, and reset capability from a remote location. They include a one-gang plate, momentary SPST switch, red alarm LED, and terminal block. Magnetically operated models (TRM) or key-operated models (TRK) are available.

| | |
|---|---|
| Compatible electrical boxes | North American 1-gang box<br>Standard 4-in square box, 1-1/2 inches deep, with 1-gang cover |
| LED indicators | Alarm (red) |
| LED type | Clear lens |
| Wire size | 14 to 22 AWG |
| Resistance per wire | 10 Ohms, max. |
| Current requirements | See controller specifications |
| LED circuit ratings | Voltage: 3 VDC, max.<br>Current: 30 mA, max. |
| Switch ratings (SD-TRK) | Voltage: 125 VDC, max.<br>Current: 4 A, max. |
| Switch ratings (SD-TRM) | Voltage: 200 VDC, max.<br>Current: 0.5 A, max. |
| Operating environment | Humidity: 93% RH, noncondensing |
| Storage temperature | -4 to 140°F (-20 to 70°C) |
| Agency listings | UL, ULC, CSFM |

## ORDERING INFORMATION

| Catalog | Description | Ship Wt., lb. (kg) |
|---|---|---|
| KI-DDOS | Optica Duct Smoke Detector | 2.4 (1.1) |
| **Accessories** | | |
| SD-T8 | 8-inch sampling tube | 0.5 (0.2) |
| SD-T18 | 18-inch sampling tube | 1.5 (0.7) |
| SD-T24 | 24-inch sampling tube | 2.7 (1.2) |
| SD-T36 | 36-inch sampling tube | 3.0 (1.4) |
| SD-T42 | 42-inch sampling tube | 3.5 (1.6) |
| SD-T60 | 60-inch sampling tube | 5.8 (2.6) |
| SD-T78 | 8-inch sampling tube | 7.5 (3.4) |
| SD-T120 | 120-inch sampling tube | 11.5 (5.2) |
| GSA-LED | Remote alarm LED | 1.0 (0.5) |
| SD-TRM | Remote test station, magnetic | 1.0 (0.5) |
| SD-TRK | Remote test station, keyed | 1.0 (0.5) |
| KI-DDOSIB | Replacement interface board | |
| KI-DDOS-ROT | Replacement optical sensor tube assembly | |
| DDOS-RET | Replacement exhaust tube | |
| SD-VTK | Air velocity test kit (stoppers only, etc) | 1.0 (0.5) |
| SD-MAG | Test magnet kit | 0.5 (0.2) |

## CONTACT US


Phone: 888.244.9979 (Option 4)
Email: kidde.fire@kgsolutions.com
Website: kidde-esfire.com

8985 Town Center Pkwy,
Bradenton, FL 34202



©2025 Walter Kidde Portable Equipment, LLC
All rights reserved.


*Kidde Commercial and its authorized resellers/distributors are separate and independent entities. This relationship between vendor and reseller/distributor does not constitute a legal partnership or create any shared liability between companies.

08-05-25