KIDDE™ COMMERCIAL

FIRE ALARM SYSTEMS.
POWERED BY PARTNERSHIP.*

OUTDOOR-RATED EXTENDED CANDELA STROBES AND SPEAKER-STROBES

GENESIS LED EWGVM & EWGSVM SERIES

S5389
S2813

7125-1657:0521
7320-1657:0526

OVERVIEW

Genesis LED EWGVM & EWGSVM Extended candela strobes and speaker-strobe appliances are among the most versatile emergency appliances of their kind. They are exceptionally capable as they are designed for outdoor wet applications with a NEMA 4X / IP66 UL listing[1], and IP67 Compliant[2]. Genesis LED EWGVM & EWGSVM appliances operate seamlessly in extreme temperatures, with a listed operating temperature range of as low as -40 °F to as high as 151 °F (-40 °C to 66 °C). These features make them suitable for a wide range of wet and harsh environments and applications, such as exposure to rain, snow, and sleet, and challenging conditions such as process areas, garage buildings, exterior of buildings, amongst many others.

Genesis LED EWGVM & EWGSVM Extended candela series feature a sleek low-profile design and offer energy-efficient technology that makes them less expensive to install and operate by reducing overhead. Genesis LED EWGVM & EWGSVM Extended candela strobes feature-high efficiency optics, combined with patented electronics, to deliver a highly controlled and efficiently focused light distribution pattern in exchange for lower current requirements. Strobes have field-selectable 15,30,75,115 candela light output. They are precision-timed to meet UL 1971 synchronization standards. Candela settings are viewable even after installation through an innovative sealed viewport display.

Compared with Xenon-type strobes, High-Performance LED strobes require fewer power supplies, backup power, batteries, and often smaller wire gauge, which lightens conduit requirements. They are also backwards-compatible with legacy strobes, so there's no need to replace all your existing devices to upgrade to new LED technology. In fact, Genesis LED EWGVM & EWGSVM Extended candela series strobes can be mixed on the same circuit and used in the same field of view as Xenon-based strobes. This makes Genesis LED EWGVM & EWGSVM Extended candela series ideal for new installations and retrofits alike.

Genesis LED EWGSVM Extended candela series appliances speakers feature selectable wattage taps to be configured in the field. Settings remain clearly visible — even after final installation. Speakers are also capable of both 25V and 70V and voltage in a single model with a field selectable switch. All this flexibility allows devices to be easily fine-tuned to exactly how they're needed to perform. All Genesis speakers include a DC blocking capacitor to allow electrical supervision of the audio distribution circuit.

Field-configurable speaker sound output levels provide the flexibility modern life safety projects demand, while the Genesis LED Mass Notification control protocol keeps multiple strobes on compatible NAC circuits synchronized to well within NFPA 72 requirements. The Speakers are approved for low frequency sounder applications when used with compatible tone file and systems, meeting NFPA and UL 520Hz requirements for sleeping areas, making them ideal for new construction or retrofits.

They are available for mounting on the ceiling or the wall. They can be installed to recessed (in-the-pour/block) electrical boxes. Genesis LED EWGVM & EWGSVM Extended candela series notification appliances also mount to suitable surface boxes. Replaceable Cover skins are available with FIRE, ALERT, FIRE/FEU (English/French), FUEGO (Spanish), and no marking configurations.

[1]UL Listed for Type 4X and IP66 when installed in surface/flush-mount applications as described under "Specifications."
[2]Device only (standalone) is IP67 compliant.

*Kidde Commercial and its authorized resellers/distributors are separate and independent entities. This relationship between vendor and reseller/distributor does not constitute a legal partnership or create any shared liability between companies.

STANDARD FEATURES

Designed for Outdoor & Wet-Rated Applications

– NEMA 4X / IP66[1] UL listing (when installed in surface/flush mount applications)
– IP67[2] Compliant Device only (standalone)
– Wide Operating Temperature range
– As low as -40 °F to as high as 151 °F (-40 °C to 66 °C)

High-Performance LED Strobe Technology

– Ultra-low device current consumption allows:
  – More devices per circuit
  – Ability to use lower-gauge wire
  – Longer wire runs
  – Fewer booster power supplies
  – High-efficiency optics
  – Selectable 15,30,75 or 115 cd light output
  – LED devices may be mixed with legacy Xenon strobes

High Fidelity Performance with Excellent STI

– Increased sound fidelity and audio intelligibility with an STI rating of .81 (More than .76 is excellent)

Low-Frequency (520Hz) Capable

– Low-frequency output meets NFPA standards for newly constructed commercial sleeping areas

Field Flexibility

– Speakers are also capable of both 25V and 70V voltage in a single model with a field-selectable switch
– Speakers feature selectable wattage taps for ¼W, ½W, 1W, and 2W to configure sound output levels in the field

Low-Profile Design

– Ultra-slim ... protrudes about 1.55 in. (3.94 cm) from the mounting surface
– Attractive appearance ... no visible mounting screws

Multiple Marking Options

– Order FIRE, ALERT, FEU/FIRE (French/English), FUEGO (Spanish), or no marking configurations
– Change markings at any time with replaceable quick-swap covers

Easy to Install

– Suitable for mount on walls or ceilings (indoor or outdoor)
– Compatible with Model 449 (gray) or 74347U (red) Deep 4-inch-square electrical box
– Field-selectable settings
– Fully compatible with Genesis synchronization protocols
– Speaker-only and speaker-strobe options

Current draw is the same for all candela output settings

– Easier for new system design
– Flexible for future changes in light output needs

APPLICATION

Speaker

The suggested sound pressure level for each signalling zone used with alert or alarm signals is a minimum of 15 dB above the average ambient sound level or 5 dB above the maximum sound level having a duration of at least 60 seconds, whichever is greater. Thisis measured 5 feet (1.5 m) above the floor.

Doubling the distance from the signal to the ear will theoretically cause a 6dB reduction in the received sound pressure level. The actual effect depends on the acoustic properties of materials in the space. Doubling the power output of a device (e.g., a speaker from 1W to 2W) will increase the sound pressure level by 3dBA.

Typical Sound Output Distribution dBA Measured in anechoic chamber at two watts

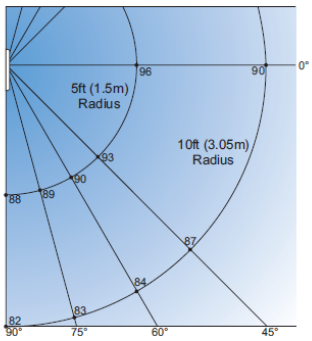

Genesis LED Series Cone Speaker/strobe

Strobe

Genesis LED EWGVM & EWGSVM Extended candela series clear-lensed strobes are UL 1971-listed for use indoors as wall- or ceiling-mounted public-mode notification appliances for the hearing impaired, and UL 1638-listed for outdoor applications. Prevailing codes require strobes to be used where ambient noise conditions exceed specified levels, where occupants use hearing protection, and in areas of public accommodation as defined in the Americans with Disabilities Act.

Visible appliance synchronization is required to avoid causing issues with people who have Photosensitive Epilepsy (PSE). Notification appliance synchronization is also generally required when more than two strobe appliances are in the same field of view from any one location. All Genesis strobes meet UL synchronization requirements (within 10 milliseconds over a two-hour period) when used with a synchronization source. See the specifications table for a list of compatible sources.

INSTALLATION AND MOUNTING

Genesis LED EWGVM & EWGSVM Extended candela series signals are rated for outdoor use and are suitable for indoor or outdoor applications on walls or ceilings. When installing the notification appliance in flush-mount outdoor or wet applications on a standard 4-inch-square-deep electrical box, EWGWMA (white) or EWGRMA (red) adapter plate must be ordered separately; remove the trim skirt from the adapter ring by removing the two screws from the back of the adapter ring.

For surface-mount installation in outdoor or wet applications, appliances must be mounted to a 449 (gray) or 74347U (red) weatherproof electrical box, and a EWGWMA (white) or EWGRMA (red) adapter plate with ring is required and must be ordered separately.

The shallow depth of Genesis LED devices leaves room behind the appliance for extra wiring. See “Specifications” below for a list of compatible electrical boxes that meet UL/ULC, IP66, and NEMA 4X requirements.

To meet IP66 requirements, plumbing tape (Teflon tape) must be applied to all threaded conduit plugs and connectors. The Genesis LED EWGVM & EWGSVM Extended candela series notification appliances listed in the data sheet are for DC rated operating voltage applications only. See Application Bulletin for details on application requirements requiring FWR operating voltage.

Flush-mount installation – 4-inch square-deep electrical box

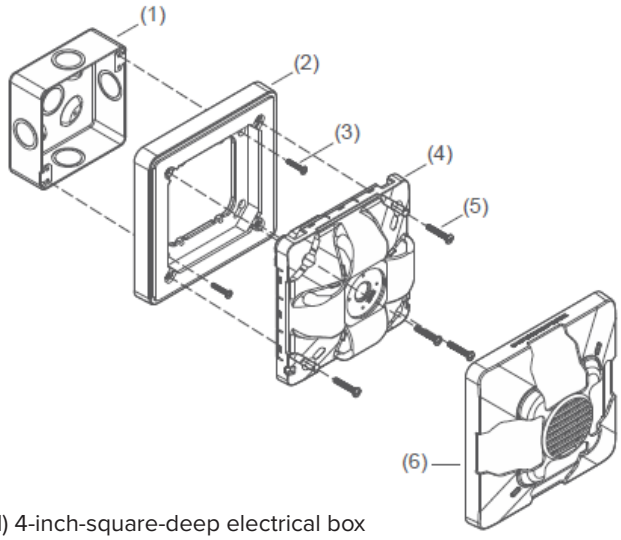

(1) 4-inch-square-deep electrical box
(2) EWGWMA or EWGRMA adapter plate (required, ordered separately)
(3) 8-32 machine screw (2X, supplied with electrical box)
(4) Notification appliance
(5) 8-32 machine screws (4X, supplied with appliance)
(6) Cover

Surface-mount installation – Model 449 (gray) or 74347U (red) weatherproof electrical box

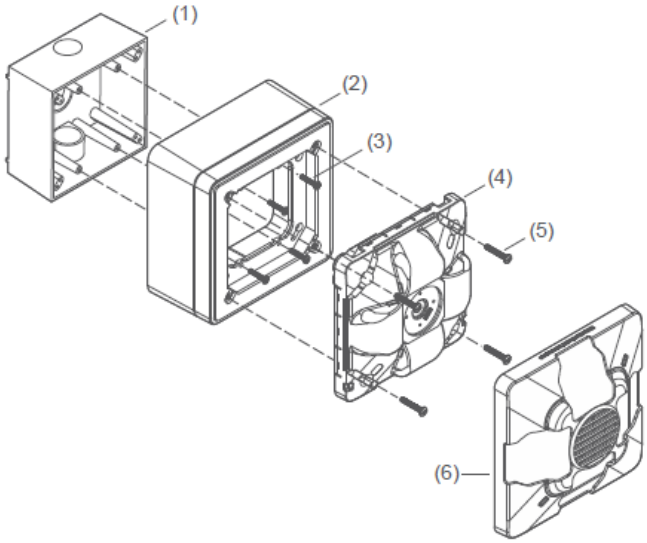

(1) Model 449 or 74347U weatherproof surface-mount electrical box
(2) EWGWMA or EWGRMA adapter plate with ring (required, ordered separately)
(3) 6-32 machine screw (4X, supplied with appliance)
(4) Notification appliance
(5) 8-32 machine screws (4X, supplied with appliance)
(6) Cover

WARNING: These devices will not operate without electrical power. As fires frequently cause power interruptions, we suggest you discuss further safeguards with your local fire protection specialist. Kidde Commercial recommends that these devices always be installed in accordance with the latest recognized edition of national and local codes. Refer to the appropriate codes and standards for mounting height information.

FIELD CONFIGURATION

Genesis LED EWGSVM speakers may be set to 70- or 25-Volt operation, and for ¼-, ½-, 1-, or 2-watt operation. The wattage setting is changed by removing the cover and simply sliding the S1 switch until the desired setting appears. The setting remains visible through a small window on the front of the device after the cover is installed. The voltage setting (70V or 25V) is toggled at S3. This setting is not visible after the cover is replaced.

Genesis LED EWGSVM speaker-strobes also feature selectable candela output. The candela setting is changed by removing the cover and simply sliding the S2 switch until the desired setting appears. The setting remains visible through a small window on the front of the device after the cover is installed.

LIGHT AND SOUND OUTPUT SETTINGS

Speaker-Strobe

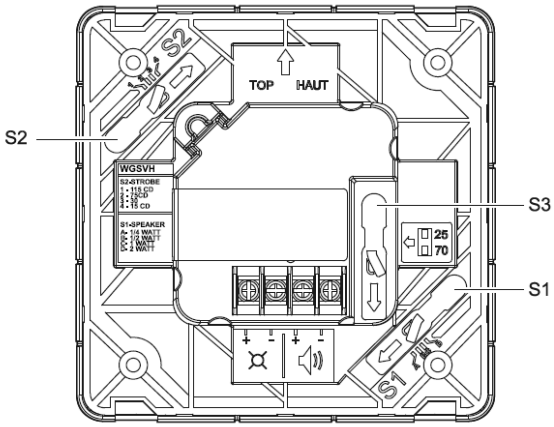

S1 switch settings		S2 switch settings		S3 switch settings	
A	1/4 Watt	1	115 candela	25	25 VRMS
B	1/2 Watt	2	75 candela	70	70 VRMS
C	1 Watt	3	30 candela		
D	2 Watt	4	15 candela		

Strobe

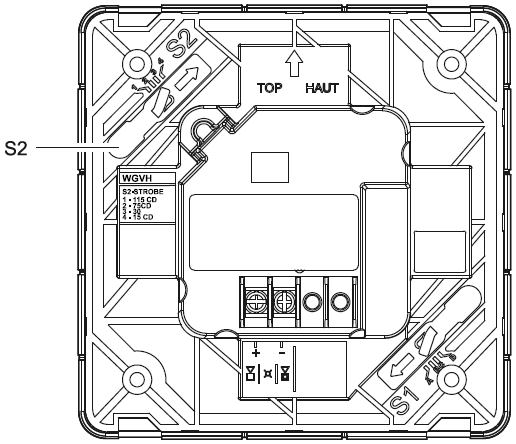

S2 switch settings	
1	115 candela
2	75 candela
3	30 candela
4	15 candela

Note: Switch S1 is not available on strobe-only models.

WIRING

Speaker-Strobe

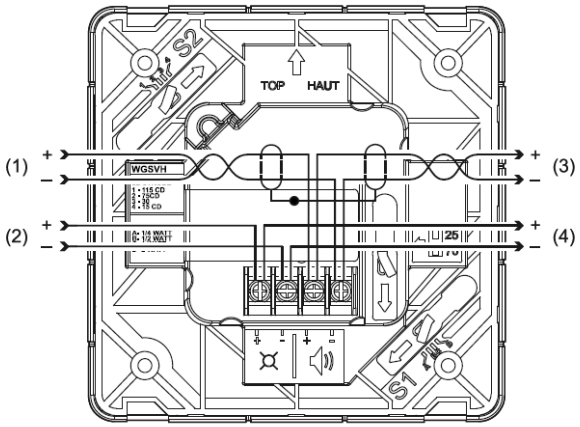

(1) Speaker circuit IN (shields, if used, must be continuous and free from earth ground except at the signal source)
(2) Strobe circuit IN (polarity shown in the active condition)
(3) Speaker circuit OUT
(4) Strobe circuit OUT

Strobe

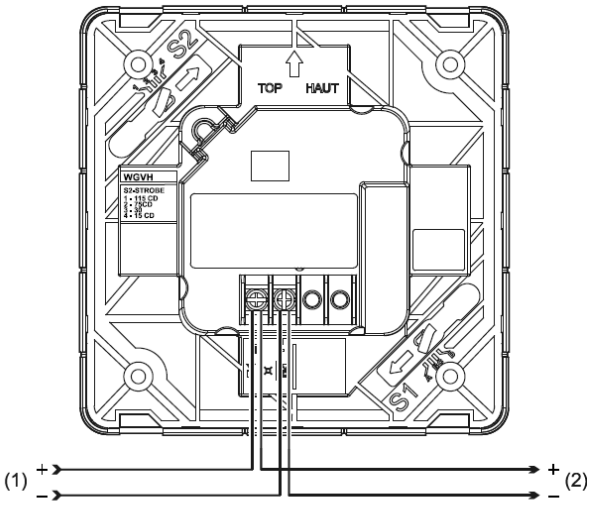

(1) Strobe circuit IN (signal polarity shown in the active condition)
(2) Strobe circuit OUT

DIMENSIONS

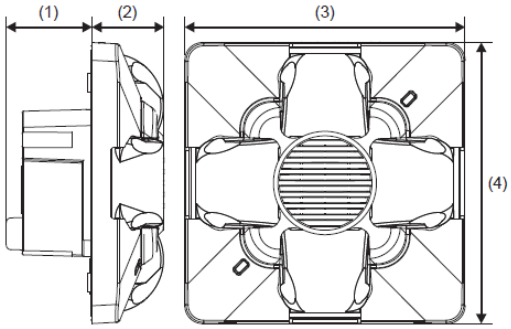

(1) 1.8 in. (4.57 cm)
(2) 1.55 in. (3.94 cm)
(3) 6.0 in. (15.24 cm)
(4) 6.0 in. (15.24 cm)

OPERATING CURRENT

Strobe setting	16 to 33 VDC
15,30,75,115	68 mA

See Application Bulletin for FWR operating voltage.

SOUND LEVEL OUTPUT (DBA) AT 3.05M (10FT.)

Voltage Setting	Wattage Setting	Reverberant (UL 1480)	Anechoic (CAN/ULC-S541)
25V / 70V	1/4W	78	76
	1/2W	81	79
	1W	84	82
	2W	87	85

SOUND PATTERN (SPEAKER-STROBE MODELS)

Axis	Angle	Change in output
Horizontal	± 50°	–3 dBA
	± 73°	–6 dBA
	± 90°	–9 dBA
Vertical	± 49°	–3 dBA
	± 71°	–6 dBA
	± 90°	–9 dBA

LIGHT DISTRIBUTION

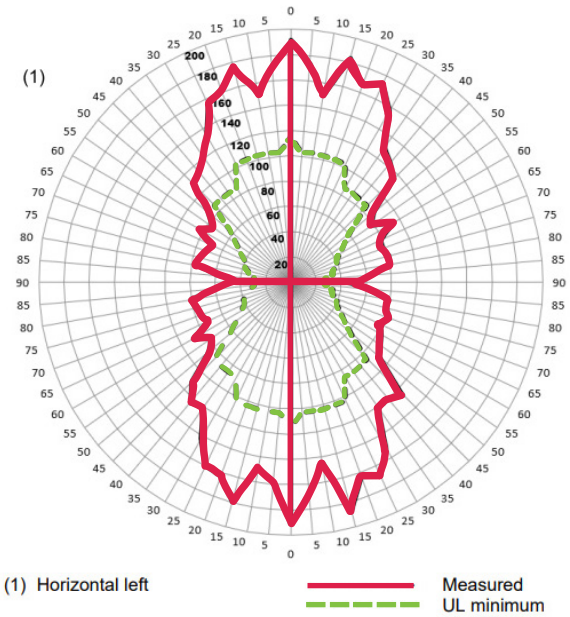

SPECIFICATIONS

Operating Voltage Strobe Speaker	 16 to 33 VDC 25 VRMS, 70 VRMS (selectable)
Supervisory voltage	30 V max.
Speaker response (UL rated)	400 to 4,000 Hz
Speaker frequency response (nominal)	100Hz-11,000Hz
Resonant frequency	520 Hz
Light output	15,30,75,115 cd
Strobe flash rate	1 fps (flash per second) approx.
Synchronization	20 Ω max. between any two devices. To determine allowed wire resistance, refer to these specifications, and the specifications for the synchronized signal source.
Synchronization Sources	CC1S/MCC1S Series Signal Modules, Universal Class A/B modules, FX- NAC, Booster Power Supplies (FX, VM, VS and Evolve Series).
Wire size	12 to 18 AWG (0.75 to 2.50 mm^2)
Screw torque Mounting screws Terminal screws	 15 lbf-in (1.8 N-m) max. 12 lbf-in (1.4 N-m) max.
Compatible electrical boxes[3] Surface mount[4] Flush mount[4]	UL/ULC, IP66, NEMA 4X – Model 449 (gray) or 74347U (red) electrical box with EWGWMA or EWGRMA adapter plate with ring UL/ULC, IP66,NEMA 4X Deep 4-inch square electrical box with EWGWMA or EWGRMA adapter plate
Compatible adapter rings	EWGWMA, EWGRMA
Operating environment	Class – Outdoor wet Temperature −40 to 150.8°F (−40 to 66°C) Relative humidity 0 to 95% non-condensing
Storage temperature	-40 to 158°F (-40 to 70°C)
RAL Color	Red=RAL 3013 White=RAL 9002
Environmental compliance	RoHS directive 2011/65/EU

[3]Electrical boxes must be at least 2 in. (5.08 cm) deep.
[5]To meet IP66 requirements, plumbing tape (Teflon tape) must be applied to all threaded conduit plugs and connectors.

ORDERING INFORMATION

Notification Applicances		Color	Marking
Strobes	EWGVMRF	Red	FIRE
	EWGVMRA	Red	ALERT
	EWGVMRN	Red	None
	EWGVMWF	White	FIRE
	EWGVMWA	White	ALERT
	EWGVMWN	White	None
Speaker-Strobes	EWGSVMRF	Red	FIRE
	EWGSVMRA	Red	ALERT
	EWGSVMRN	Red	None
	EWGSVMWF	White	FIRE
	EWGSVMWA	White	ALERT
	EWGSVMWN	White	None

Notification Applicances		Color	Marking
Strobe Covers	EWGVRF-CVR	Red	FIRE
	EWGVRA-CVR	Red	ALERT
	EWGVRN-CVR	Red	None
	EWGVWF-CVR	White	FIRE
	EWGVWA-CVR	White	ALERT
	EWGVWN-CVR	White	None
Speaker-Strobe Covers	EWGAVRF-CVR	Red	FIRE
	EWGAVRA-CVR	Red	ALERT
	EWGAVRN-CVR	Red	None
	EWGAVWF-CVR	White	FIRE
	EWGAVWA-CVR	White	ALERT
	EWGAVWN-CVR	White	None

ACCESSORIES

	74347U	Surface-mount box, outdoor rated, Red		EWGWMA	Adapter plate and ring, White
	449	Surface-mount box, outdoor rated, Gray		EWGRMA	Adapter plate and ring, Red

Model Number Syntax, Appliances

EWGSVMRF

- **Genesis Series**
  - **EWG** = Genesis Outdoor Rated
- **Housing Color**
  - **R** = Red
  - **W** = White
- **Housing Marking**
  - **N** = None
  - **F-FR** = FIRE/FEU
  - **F-SP** = FUEGO
  - **F** = FIRE
  - **A** = ALERT
- **Candela Rating**
  - **M** = Extended Candela
- **Functions**
  - **V** = Strobe only
  - **SV** = Speaker-Strobe

Model Number Syntax, Replacement Covers

EWGAVRF-CVR

- **Genesis Series**
  - **EWG** = Genesis Outdoor Rated
- **Housing Color**
  - **R** = Red
  - **W** = White
- **Cover Designation**
- **Cover Marking**
  - **N** = None
  - **F-FR** = FIRE/FEU
  - **F-SP** = FUEGO
  - **F** = FIRE
  - **A** = ALERT
- **Functions**
  - **V** = Visual only
  - **AV** = Audio-Visual

Note: EWGAV covers are compatible with EWGSVM Speaker-Strobes and EWGV covers are compatible with EWGVM Strobe Only appliances.

FIRE ALARM SYSTEMS.
POWERED BY PARTNERSHIP.*

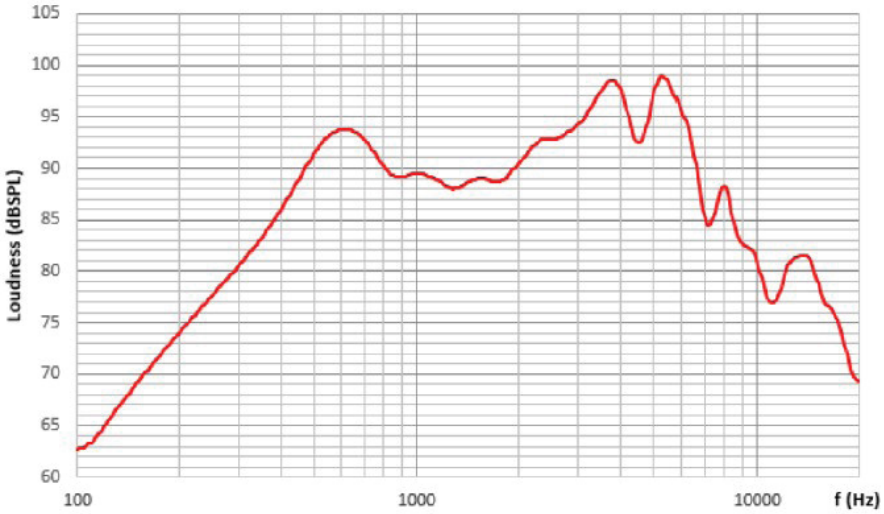

Typical Frequency response @ 1W/1m

CONTACT US

Phone: 888.244.9979 (Option 4)
Email: kidde.fire@kgsolutions.com
Website: kidde-esfire.com

8985 Town Center Pkwy,
Bradenton, FL 34202

©2025 Walter Kidde Portable Equipment, LLC
All rights reserved.

*Kidde Commercial and its authorized resellers/distributors are separate and independent entities. This relationship between vendor and reseller/distributor does not constitute a legal partnership or create any shared liability between companies.

06-03-25