KIDDE™ COMMERCIAL

FIRE ALARM SYSTEMS.
POWERED BY PARTNERSHIP.*

OUTDOOR-RATED HORNS, STROBES, AND HORN-STROBES

GENESIS LED EWG SERIES

S218, S5389

7135-1657:0522
7125-1657:0521

OVERVIEW

Genesis LED EWG Series horn, strobe and horn-strobe appliances are among the most versatile emergency appliances of their kind. They are exceptionally capable as they are designed for outdoor wet applications with a NEMA 4X / IP66 UL listing[1], and IP67 Compliant[2]. Genesis LED EWG appliances operate seamlessly in extreme temperatures, with a listed operating temperature range of as low as -40 °F to as high as 151 °F (-40 °C to 66 °C). These features make them suitable for a wide range of wet and harsh environments and applications, such as exposure to rain, snow, and sleet, and challenging conditions such as process areas.

Genesis LED EWG Series feature a sleek low-profile design and offer energy-efficient technology that makes them less expensive to install and operate by reducing overhead. Genesis LED EWG Series strobes feature high-efficiency optics, combined with patented electronics, to deliver a highly controlled and efficiently focused light distribution pattern in exchange for lower current requirements. Strobes have field-selectable 15 or 30 cd light output. They are precision-timed to meet UL 1971 synchronization standards. Candela settings are viewable even after installation through an innovative sealed viewport display.

Compared with Xenon-type strobes, High-performance LED strobes require fewer power supplies, backup power, batteries, and often smaller wire gauge, which lightens conduit requirements. They are also backwards-compatible with legacy strobes, so there's no need to replace all your existing devices to upgrade to new LED technology. In fact, Genesis LED EWG Series strobes can be mixed on the same circuit and used in the same field of view as Xenon-based strobes. This makes Genesis LED EWG Series ideal for new installations and retrofits alike.

Genesis LED EWG Series appliances feature an efficient and powerful piezo sounder. Field-configurable sound output levels provide the flexibility modern life safety projects demand, while the Genesis LED control protocol keeps multiple strobes on compatible NAC circuits synchronized to well within NFPA 72 requirements.

They are available for mounting on the ceiling or the wall. They can be installed to recessed (in-the-pour/block) electrical boxes. Genesis LED EWG notification appliances also mount to suitable surface boxes. Replaceable Cover skins are available with FIRE, ALERT, and no marking configurations.

[1]UL Listed for Type 4X and IP66 when installed in surface/flush-mount applications as described under "Specifications."
[2]Device only (standalone) is IP67 compliant.

*Kidde Commercial and its authorized resellers/distributors are separate and independent entities. This relationship between vendor and reseller/distributor does not constitute a legal partnership or create any shared liability between companies.

STANDARD FEATURES

- **Designed for Outdoor & Wet-Rated Applications**
  - NEMA 4X / IP66[1] UL listing (when installed in surface/flush-mount applications)
  - IP67[2] Compliant Device only (standalone)
- **High-Performance LED Strobe Technology**
  Ultra-low device current consumption allows:
  – More devices per circuit
  – Ability to use lower-gauge wire
  – Longer wire runs
  – Fewer booster power supplies
  – High-efficiency optics
  – Selectable 15 or 30 cd light output
  – LED devices may be mixed with legacy Xenon strobes
- **Efficient Audible Output**
  – Selectable temporal or steady horn output
  – Improved audio frequency range for better wall penetration
- **Low-Profile Design**
  – Ultra-slim ... protrudes about 1.55 in. (3.94 cm) from the mounting surface
  – Attractive appearance ... no visible mounting screws
- **Multiple Marking Options**
  – Order FIRE, ALERT, or no marking configurations
  – Change markings at any time with replaceable quick-swap covers
- **Easy to Install**
  – Suitable for mount on walls or ceilings (indoor or outdoor)
  – Compatible with Model 449 (gray) or 74347U (red) deep 4-inch-square electrical box
  – Field-selectable settings
  – Fully compatible with Genesis synchronization protocols
  – Horn only, strobe only, and horn-strobe options
- **Current draw is the same for all candela output settings**
  – Easier for new system design
  – Flexible for future changes in light output needs

APPLICATION

Horns

Genesis LED EWG Series horn output reaches as high as 86 dBA in accordance with UL 464 (88 dBA in accordance with ULC-S525) and features a unique frequency tone that results in excellent sound penetration and an unmistakable warning of danger. Horns may be configured for either coded or non-coded notification circuits.

The suggested sound pressure level for each notification zone used with alarm notification appliances is at least 15 dB above the average ambient sound level, or 5 dB above the maximum sound level having a duration of at least 60 seconds, whichever is greater, measured 5 feet (1.5 m) above the floor. The average ambient sound level is A-weighted (fast response) sound pressure measured over a 24-hour period.

Doubling the distance from the notification appliance to the ear will theoretically result in a 6 dB reduction of the received sound pressure level. The actual effect depends on the acoustic properties of materials in the space. A 3 dBA difference represents a barely noticeable change in volume.

Strobes

Genesis LED EWG Series clear-lensed strobes are UL 1971-listed for use indoors as wall- or ceiling-mounted public-mode notification appliances for the hearing impaired, and UL 1638-listed for outdoor applications. Prevailing codes require strobes to be used where ambient noise conditions exceed specified levels, where occupants use hearing protection, and in areas of public accommodation as defined in the Americans with Disabilities Act.

Visible appliance synchronization is required to avoid causing issues with people who have Photosensitive Epilepsy (PSE). Notification appliance synchronization is also generally required when more than two strobe appliances are in the same field of view from any one location. All Genesis strobes meet UL synchronization requirements (within 10 milliseconds over a two-hour period) when used with a synchronization source. See the specifications table for a list of compatible sources.

INSTALLATION AND MOUNTING

Genesis LED EWG Series notification appliances are rated for outdoor use and are suitable for indoor or outdoor applications on walls or ceilings. When installing the notification appliance in flush-mount outdoor or wet applications on a standard 4-inch-square-deep electrical box, EWGWMA (white) or EWGRMA (red) adapter plate must be ordered separately; remove the trim skirt from the adapter ring by removing the two screws from the back of the adapter ring.

For surface-mount installation in outdoor or wet applications, appliances must be mounted to a 449 (gray) or 74347U (red) weatherproof electrical box, and an EWGWMA (white) or EWGRMA (red) adapter plate with ring is required and must be ordered separately.

The shallow depth of Genesis LED devices leaves room behind the appliance for extra wiring. See “Specifications” below for a list of compatible electrical boxes that meet UL/ULC, IP66, and NEMA 4X requirements. To meet IP66 requirements, plumbing tape (Teflon tape) must be applied to all threaded conduit plugs and connectors.

The Genesis LED EWG series notification appliances listed in the data sheet are for DC rated operating voltage applications only. See Application Bulletin for details on application requirements requiring FWR operating voltage.

Flush-mount installation – 4-inch square deep electrical box

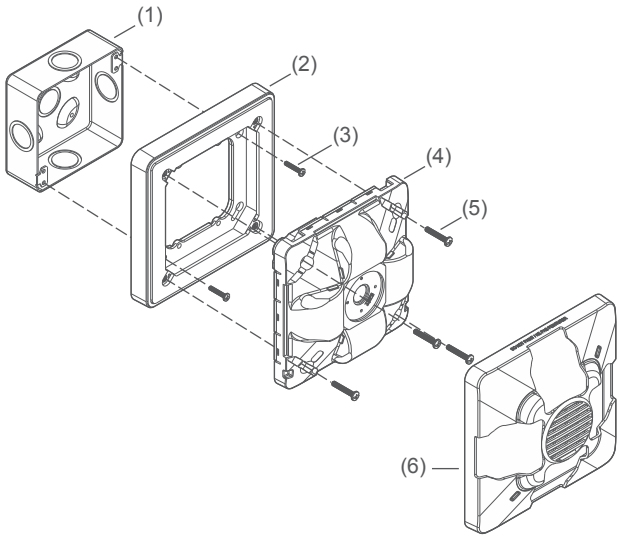

(1) 4-inch-square-deep electrical box
(2) EWGWMA or EWGRMA adapter plate (required, ordered separately)
(3) 8-32 machine screw (2X, supplied with electrical box)
(4) Notification appliance
(5) 8-32 machine screws (4X, supplied with appliance)
(6) Cover

Surface-mount Installation – Model 449 (gray) or 74347U (red) weatherproof electrical box

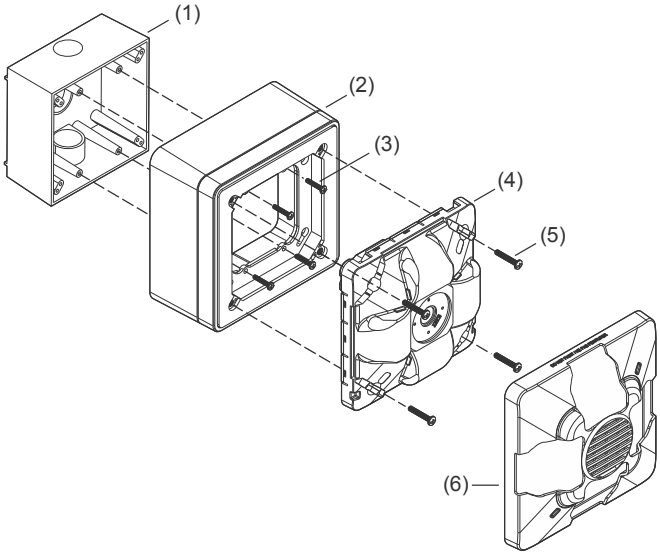

(1) Model 449 or 74347U weatherproof surface-mount electrical box
(2) EWGWMA or EWGRMA adapter plate with ring (required, ordered separately)
(3) 6-32 machine screw (4X, supplied with appliance)
(4) Notification appliance
(5) 8-32 machine screws (4X, supplied with appliance)
(6) Cover

WARNING: These devices will not operate without electrical power. As fires frequently cause power interruptions, we suggest you discuss further safeguards with your local fire protection specialist.

Kidde Commercial recommends that these devices always be installed in accordance with the latest recognized edition of national and local codes. Refer to the appropriate codes and standards for mounting height information.

FIELD CONFIGURATION

Horn pattern

Audible output of Genesis LED EWG horns and horn-strobes is factory-set to sound in a three-pulse temporal pattern. Units may be configured for use with coded systems by cutting a JP1 on the circuit board, setting the switch to continuous mode. This results in a steady output that can be turned on and off (coded) as the system applies and removes power to the notification circuit. Note: Temporal 3 coding is the required output for fire notification devices per NFPA 72. Any device coding other than temporal 3 is at the discretion and approval of the local authority having jurisdiction (AHJ).

Strobe pattern

Genesis LED EWG horn-strobes and strobes are factory-set for use as UL 1971-compliant notification appliances for public mode operation, and UL 1638-listed as protective visual signaling appliances.

Strobe output

Genesis LED EWG strobes may be set for one of two output intensities. The output setting is changed by simply opening the device and sliding the switch to the desired setting. The setting remains visible after the cover is closed through a small window on the front of the device.

LIGHT AND SOUND OUTPUT SETTINGS

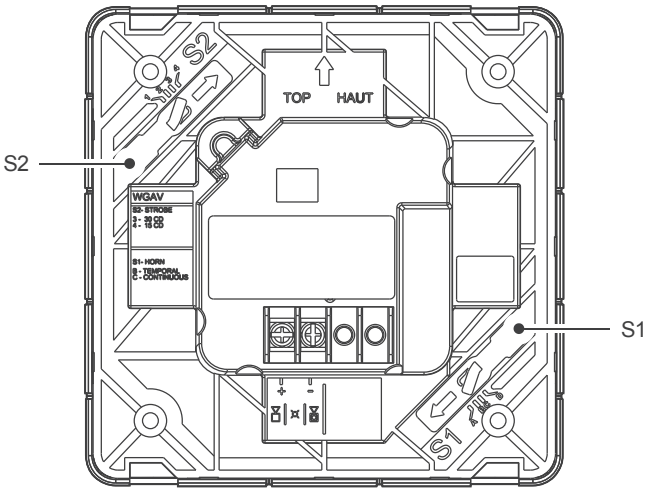

S1 switch settings

A Not used
B Temporal
C Continuous
D Not used

S2 switch settings

1 Not used
2 Not used
3 30 candela
4 15 candela

Note: Temporal 3 coding is the required output for fire notification devices per NFPA 72. Any device coding other than temporal 3 is at the discretion and approval of the local authority having jurisdiction (AHJ).

WIRING

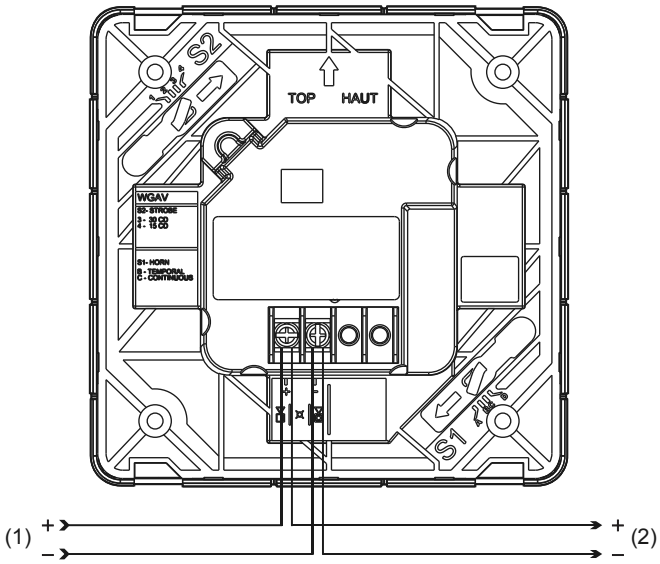

(1) Horn/strobe circuit in (signal polarity shown in the active condition)
(2) Horn/strobe circuit out

DIMENSIONS

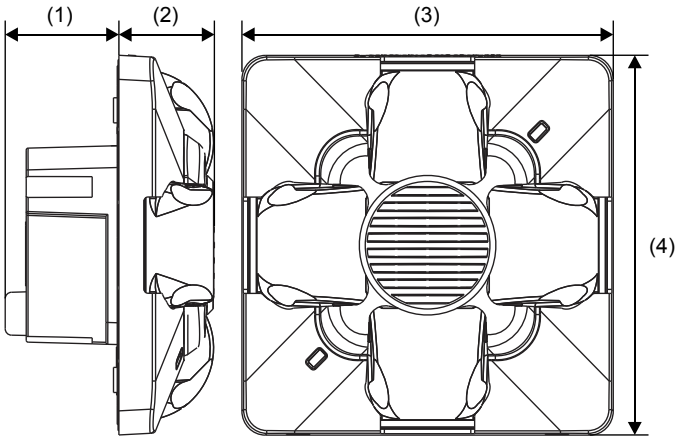

(1) 1.8 in. (4.57 cm)
(2) 1.55 in. (3.94 cm)
(3) 6.0 in. (15.24 cm)
(4) 6.0 in. (15.24 cm)

SOUND OUTPUT

Horn & Horn-Strobe

Sound setting	Reverberant (UL 464)	Anechoic (CAN/ULC-S525)
Continuous/Temporal	86 dBA	88 dBA

SOUND PATTERN

Horn Models

Axis	Angle	Change in output
Horizontal	± 46°	–3 dBA
	± 78°	–6 dBA
	± 90°	–8.5 dBA
Vertical	± 46°	–3 dBA
	± 78°	–6 dBA
	± 90°	–8.3 dBA

Horn-Strobe Models

Axis	Angle	Change in output
Horizontal	± 58°	–3 dBA
	± 84°	–6 dBA
	± 90°	–7.1 dBA
Vertical	± 48°	–3 dBA
	± 79°	–6 dBA
	± 90°	–8.1 dBA

LIGHT DISTRIBUTION

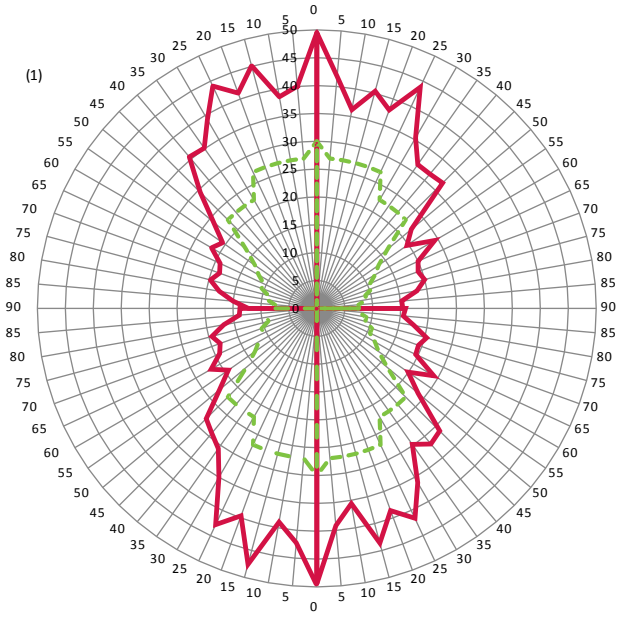

(1) Horizontal left

Measured
UL minimum

OPERATING CURRENT

Horn Models

Sound setting	16 to 33 VDC
Continuous/Temporal	20 mA

Strobe Models

Strobe setting	16 to 33 VDC
15,30	35 mA

Horn-Strobe Models

Strobe setting	Sound setting	16 to 33 VDC
15,30	Continuous/Temporal	50 mA

SPECIFICATIONS

Operating voltage	16 to 33 VDC
Horn signal type	Continuous or T3 temporal
Light output	15, 30 cd
Strobe flash rate	1 fps (flash per second) approx.
Synchronization	20 Ω max. between any two devices. To determine allowed wire resistance, refer to these specifications, and the specifications for the synchronized signal source.
Synchronization Sources	Kidde CC1S/MCC1S Series Signal Modules[3], Universal Class A/B modules[3], FX-NAC[3], Booster Power Supplies (FX, VM, VS and Evolve Series)
Wire size	12 to 18 AWG (0.75 to 2.50 mm^2)
Screw torque	
Mounting screws	15 lbf-in (1.8 N-m) max.
Terminal screws	12 lbf-in (1.4 N-m) max.
Compatible electrical boxes[4]	
Surface mount[5]	
UL/ULC, IP66, NEMA 4X	Model 449 (gray) or 74347U (red) electrical box with EWGWMA or EWGRMA adapter plate with ring
Flush mount[5]	
UL/ULC, IP66, NEMA 4X	Deep 4-inch-square electrical box with EWGWMA or EWGRMA adapter plate
Compatible adapter rings	EWGWMA, EWGRMA
Operating environment	
Class	Outdoor wet
Temperature	–40 to 150.8°F (–40 to 66°C)
Relative humidity	0 to 95% noncondensing
Storage temperature	-40 to 158°F (-40 to 70°C)
RAL Color	Red=RAL 3013 White=RAL 9002
Environmental Compliance	RoHS directive 2011/65/EU

[3]Compatibility for these modules limited to 3 appliances.
[4]Electrical boxes must be at least 2 in. (5.08 cm) deep.
[5]To meet IP66 requirements, plumbing tape (Teflon tape) must be applied to all threaded conduit plugs and connectors.

ORDERING INFORMATION

Notification Appliances		Color	Marking
Horns	EWGARA	Red	ALERT
	EWGARF	Red	FIRE
	EWGARN	Red	None
	EWGAWA	White	ALERT
	EWGAWF	White	FIRE
	EWGAWN	White	None
Strobes	EWGVRA	Red	ALERT
	EWGVRF	Red	FIRE
	EWGVRN	Red	None
	EWGVWF	White	FIRE
	EWGVWN	White	None
	EWGVWA	White	ALERT
Horn-Strobes	EWGAVRA	Red	ALERT
	EWGAVRF	Red	FIRE
	EWGAVRN	Red	None
	EWGAVWA	White	ALERT
	EWGAVWF	White	FIRE
	EWGAVWN	White	None

Replacement Appliance Covers		Color	Marking
Horn Covers	EWGARA-CVR	Red	ALERT
	EWGARF-CVR	Red	FIRE
	EWGARN-CVR	Red	None
	EWGAWA-CVR	White	ALERT
	EWGAWF-CVR	White	FIRE
	EWGAWN-CVR	White	None
Strobe Covers	EWGVRA-CVR	Red	ALERT
	EWGVRF-CVR	Red	FIRE
	EWGVRN-CVR	Red	None
	EWGVWA-CVR	White	ALERT
	EWGVWF-CVR	White	FIRE
	EWGVWN-CVR	White	None
Horn-Strobe Covers	EWGAVRA-CVR	Red	ALERT
	EWGAVRF-CVR	Red	FIRE
	EWGAVRN-CVR	Red	None
	EWGAVWA-CVR	White	ALERT
	EWGAVWF-CVR	White	FIRE
	EWGAVWN-CVR	White	None

Accessories					
	74347U	Surface-mount box, outdoor rated, Red		EWGWMA	Adapter Plate, White
	449	Surface-mount box, outdoor rated, Gray		EWGRMA	Adapter Plate, Red

Model Number Syntax, Appliances

EWGAVRF

- Genesis Series: **EWG** = Genesis Outdoor Rated
- Housing Color: **R** = Red, **W** = White
- Functions: **AV** = Horn-Strobe, **A** = Horn Only, **V** = Strobe Only
- Housing Marking: **N** = None, **F** = FIRE, **A** = ALERT

Model Number Syntax, Replacement Covers

EWGAVRF-CVR

- Genesis Series: **EWG** = Genesis Outdoor Rated
- Housing Color: **R** = Red, **W** = White
- Functions: **AV** = Speaker-Strobes & Horn-Strobes, **A** = Speaker Only & Horn Only, **V** = Strobe Only
- Cover Marking: **N** = None, **F** = FIRE, **A** = ALERT
- Cover Designation

Note: EWGAV covers are compatible with Speaker-Strobes & Horn-Strobes EWGA covers are compatible with Speaker Only & Horn Only

FIRE ALARM SYSTEMS.
POWERED BY PARTNERSHIP.*

CONTACT US

Phone: 888.244.9979 (Option 4)
Email: kidde.fire@kgsolutions.com
Website: kidde-esfire.com

8985 Town Center Pkwy,
Bradenton, FL 34202

©2025 Walter Kidde Portable Equipment, LLC
All rights reserved.

*Kidde Commercial and its authorized resellers/distributors are separate and independent entities. This relationship between vendor and reseller/distributor does not constitute a legal partnership or create any shared liability between companies.

07-25-25