KIDDE™ COMMERCIAL

FIRE ALARM SYSTEMS.
POWERED BY PARTNERSHIP.*

CEILING MOUNT HIGH CANDELA STROBES AND SPEAKER-STROBES

GENESIS LED EGCVH & EGCSVH SERIES

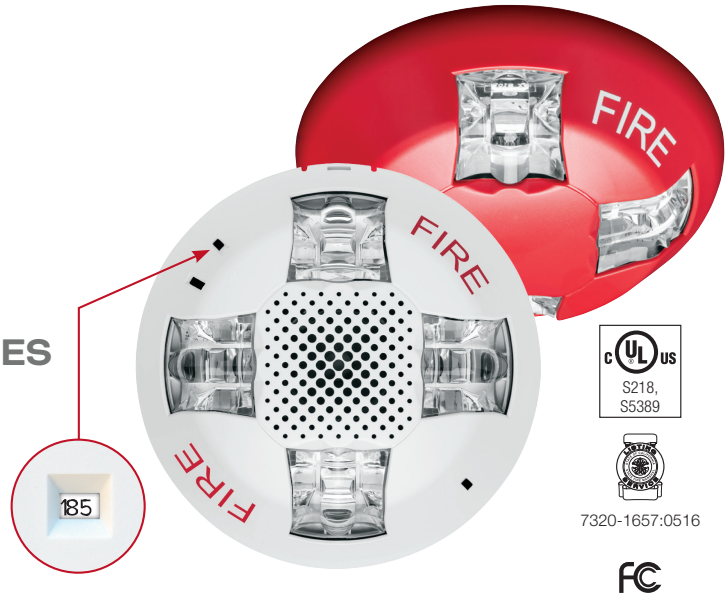

S218, S5389

7320-1657:0516

OVERVIEW

Genesis LED High Candela EGCVH & EGCSVH Series strobes and speaker-strobes combine high performance output with a sleek, low profile design and energy efficient technology that makes them less expensive to install and operate. High performance LEDs require fewer power supplies, backup power, and batteries. These new appliances are designed with energy efficiency and life safety in mind.

Speakers feature selectable wattage taps, while speaker-strobes allow for both wattage and light output levels to be configured in the field. Both settings remain clearly visible — even after final installation. Speakers are also capable of both 25V and 70V voltage in a single model with a field selectable switch. All this flexibility allows devices to be easily fine-tuned to exactly how they're needed to perform. All Genesis speakers include a DC blocking capacitor to allow electrical supervision of the audio distribution circuit.

Genesis LED High Candela EGCVH & EGCSVH Series uses high efficiency optics, combined with patented electronics, to deliver a highly controlled and efficiently focused light distribution pattern in exchange for lower current requirements. Strobes feature field-selectable 135,150,177, or 185 candela light output.

Compared with Xenon-type strobes, Genesis LED High Candela EGCVH & EGCSVH Series appliances offer greatly reduced current draw which provides benefits in longer circuit lengths, more devices per circuit, smaller wire gauge and reduced power supply quantities for an installation. They are also backwards compatible with legacy strobes, so there's no need to replace all your existing devices to upgrade to new LED technology. In fact, High Candela EGCVH & EGCSVH strobes can be mixed on the same circuit and used in the same field of view as Xenon-based strobes. This makes Genesis LED EGCVH & EGCSVH Series ideal for new installations and retrofits alike.

Field-configurable sound output levels provide the flexibility modern life safety projects demand, while the Genesis LED control protocol keeps multiple strobes on compatible NAC circuits synchronized to well within NFPA 72 requirements. They also meet NFPA and UL 520Hz requirements for sleeping areas, making them ideal for new construction or retrofits.

High Candela EGCSVH Series speakers produce crisp, clear voice audio output that is highly intelligible over large areas. In an emergency, intelligibility is critical to life safety. Understanding the content of the message is as important as knowing there is an emergency. Intelligibility is measured in Speech Transmission Index and anything above .76 is considered excellent. High Candela EGCSVH Series speakers deliver audio with an STI of .81, ensuring the message is clear.

Serviceability is another area where High Candela EGCVH & EGCSVH Series appliances shine. The universal room side wiring plate allows for pre-installation and electrical wiring as well as checking continuity with the included diagnostics check bar. High Candela EGCVH & EGCSVH Series devices can then be easily snapped into place with the confidence of knowing the wiring is correct. The innovative undercover diagnostic test points provide easy access to device circuit testing while mounted.

*Kidde Commercial and its authorized resellers/distributors are separate and independent entities. This relationship between vendor and reseller/distributor does not constitute a legal partnership or create any shared liability between companies.

STANDARD FEATURES

- **High Performance LED High Candela Strobe Technology**
  - Ultra low device current consumption allows:
    - More devices per circuit
    - Ability to use lower gauge wire
    - Longer wire runs
    - Fewer booster power supplies
  - High efficiency optics
  - Selectable 135, 150, 177, or 185 cd light output
  - LED devices may be mixed with legacy Xenon strobes on the same circuit and in the same field of view
- **High-Fidelity performance with excellent STI**
  - Increased sound fidelity and audio intelligibility with an STI rating of .81 (More than .76 is excellent)
- **Low Frequency (520Hz) capable**
  - Low frequency output meets NFPA standards for newly constructed commercial sleeping areas
- **Field flexibility**
  - Speakers are also capable of both 25V and 70V voltage in a single model with a field selectable switch
  - Speakers feature selectable wattage taps for ¼W, ½W, 1W, and 2W to configure sound output levels in the field
- **Low Profile Design**
  - Ultra-slim – protrudes about 1.5" from the mounting surface
  - Attractive appearance – no visible mounting screws
- **Multiple "FIRE" Marking Options**
  - Order English or no FIRE markings
  - Change markings at any time with replaceable quick-swap covers
  - Ask about no markings custom color UL / ULC listed covers to match architectural or design requirements.
- **Easy to Install**
  - Pre-install and pre-wire with convenient universal room side wiring plate
  - Check electrical continuity on room side wiring plate with included diagnostics check bar
  - Diagnostics port streamlines device circuit testing
  - Fits 2-gang and 4-inch-square electrical boxes
  - Optional red and white trim plates available
  - Slide switches for field configuration
  - 12 to 18 AWG in-out screw terminals for quick wiring
- **Current draw is the same for all candela output settings**
  - Easier for new system design
  - Flexible for future changes in light output needs

APPLICATION

Strobes

Genesis High Candela EGCVH & EGCSVH Series strobes are UL 1971-listed for use indoors as wall or ceiling public-mode notification appliances for the hearing impaired. Prevailing codes require strobes to be used where ambient noise conditions exceed 105 dBA (87 dBA in Canada), where occupants use hearing protection, and in areas of public accommodation as defined in the Americans with Disabilities Act.

Synchronization is important in order to avoid triggering seizures in people with photosensitive epilepsy. All Genesis strobes exceed UL synchronization requirements (within 10 milliseconds over a two-hour period) when used with a synchronization source. See the specifications table for a list of compatible sources.

Speakers

The suggested sound pressure level for each signaling zone used with alert or alarm signals is a minimum of 15 dB above the average ambient sound level or 5 dB above the maximum sound level having a duration of at least 60 seconds, whichever is greater. This is measured 5 feet (1.5 m) above the floor.

Doubling the distance from the signal to the ear will theoretically cause a 6 dB reduction in the received sound pressure level. The actual effect depends on the acoustic properties of materials in the space. Doubling the power output of a device (e.g., a speaker from 1W to 2W) will increase the sound pressure level by 3dBA.

High-Fidelity Sound

Genesis LED EGCSVH Series High-Fidelity appliances feature 87dB of sound output along with a highly intelligible Speech Transmission Index (STI) rating of .81. An STI rating above .76 is considered excellent for speech intelligibility. They are also effective in areas subject to high levels of ambient noise.

These appliances are ideal for hotels, dormitories and other residential occupancies that have sleeping areas that require 520Hz tones. In sleeping areas, always ensure that the wattage tap of the speaker is set sufficiently high so that the sound pressure reaches at least 75 dBA at the pillow.

These appliances are part of an end-to-end audio system approved for use in sleeping areas when used in conjunction with approved audio hardware and a factory-supplied 520 Hz tone. Check the System Compatibility List for other 520 Hz signaling requirements.

INSTALLATION

Genesis LED High Candela EGCVH & EGCSVH strobes and speaker-strobes mount to the required GRSW room side wiring plate. The GRSW mounting plate is required and included with the EGCVH & EGCSVH device in packs of 10 (GRSW-10) for convenient pre-installing and pre-wiring. The device can be removed easily from the room side wiring plate by pushing up with a flat tip screwdriver or using the EGRT Genesis LED Removal Tool ordered separately in packs of 10 (EGRT-10). The cover can also be removed from the device easily with a flat tip screwdriver or using the EGRT Genesis LED Removal Tool to access the light and sound output settings and a diagnostics test port for voltage testing.

Genesis LED High Candela EGCVH & EGCSVH Series strobes and speaker-strobes mount to any standard two-gang and 4-inch-square electrical box. Matching optional EGCT trim rings are available to cover oversized openings. Optional color matched double-gang surface boxes are also available.

When installing Genesis LED EGCSVH & EGCVH appliances onto 4-inch octagon boxes, Genesis GOCT Octagon Adapter is required to ensure seamless mounting. The GOCT attaches to the EGRSW wiring plate, guaranteeing a secure and efficient setup.

INSTALLATION

Electrical Box

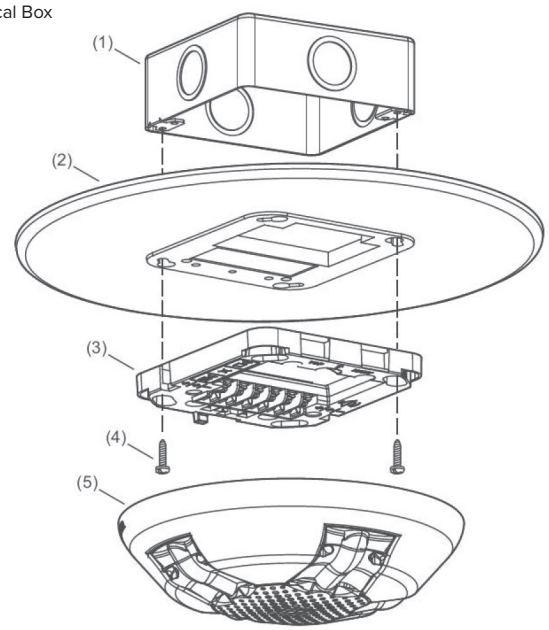

(1) Electrical box
(2) Trim plate (optional)
(3) Wiring plate (required, ordered separately)
(4) Machine screw (2X, supplied with wiring plate)
(5) Notification appliance

Removing Cover

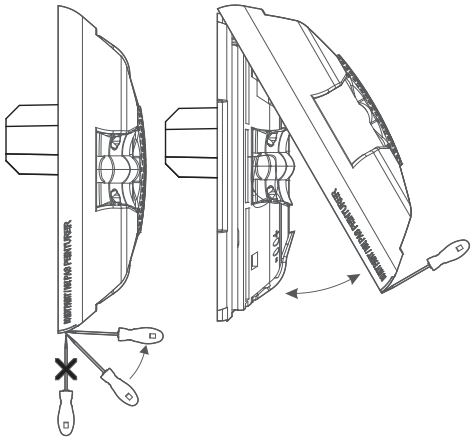

Removing Device

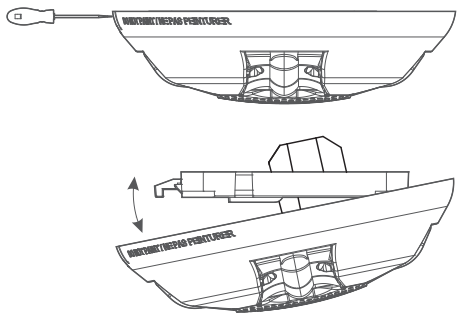

DIMENSIONS

EGCSVH & EGCVH Notification Appliances

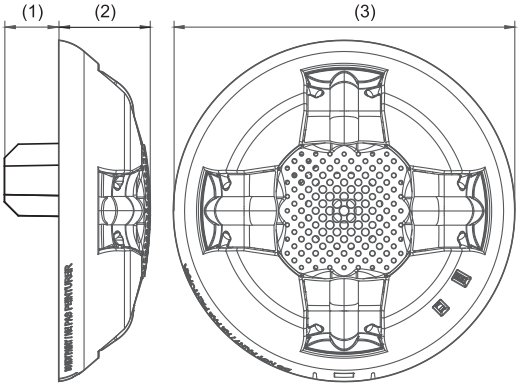

(1) 1.10 in. (2.87 cm)
(2) 1.82 in. (4.62 cm)
(3) Diameter 6.80 in. (17.27 cm)

Note: Dimension (1) does not apply to EGCVH Series, only dimensions (2) and (3).

EGCT Trim Plate (optional)

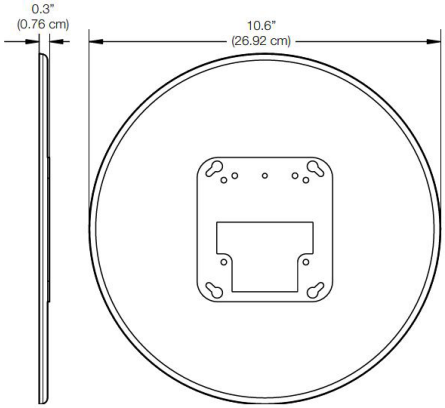

Use GOCT Octagon Adapter Plate when mounting to 4-inch octagon boxes.

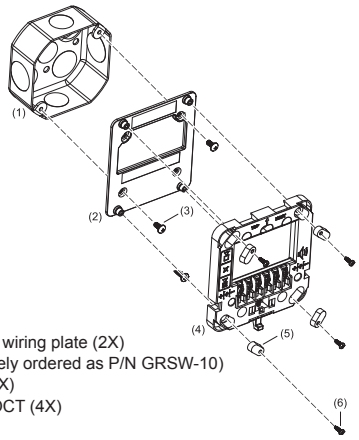

(1) Octagon electrical box
(2) GOCT
(3) Machine screw, provided with GRSW wiring plate (2X)
(4) EGRSW wiring plate (can be separately ordered as P/N GRSW-10)
(5) Adapter plug, provided with GOCT (4X)
(6) 6-19 × 0.375 screw, provided with GOCT (4X)

WIRING

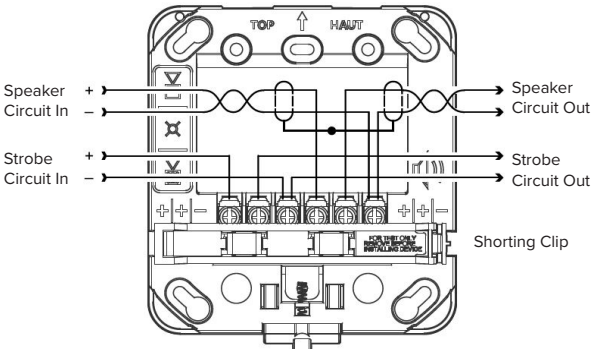

DIAGNOSTICS

Strobe Test Points

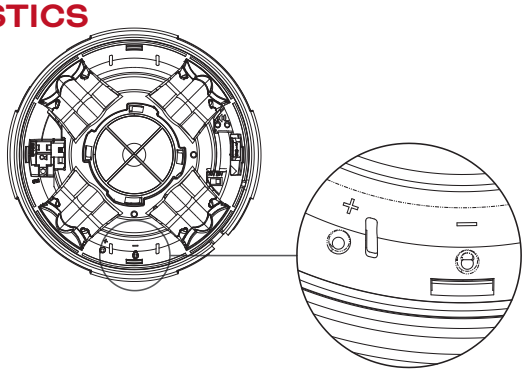

Speaker Test Points

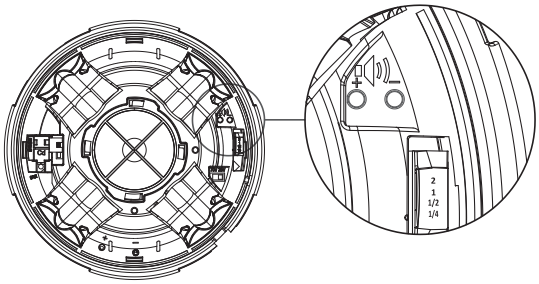

Test points indicated above are used to validate the Notification Appliance Circuit and verify device function

FIELD CONFIGURATION

Genesis LED speakers are capable of both 25V and 70V operation depending on the system. The voltage is set via a switch under the cover. Speakers also may be set for 1/4-, 1/2-, 1-, or 2-watt operation. The wattage setting is visible through a small window on the side of the device and is changed by simply sliding the switch under the cover until the desired setting appears in the window. The speaker does not have to be removed to change the wattage, only the cover.

Genesis LED clear High Candela EGCVH & EGCSVH strobes and speaker-strobes may be set for 135, 150, 177 or 185 candela output. The output setting is changed by simply removing the cover and sliding the candela switch to the desired setting. The device does not have to be removed from the wall to change the output setting. The setting remains visible through a small window on the left-hand side of the device after the cover is closed.

LIGHT AND SOUND OUTPUT SETTINGS

Strobe Switch Settings

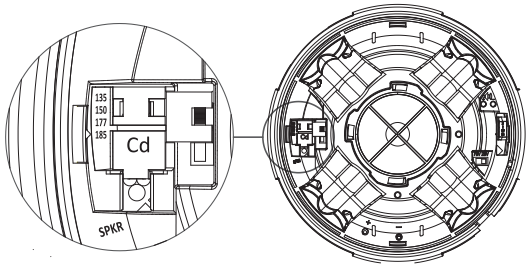

Speaker Switch Settings

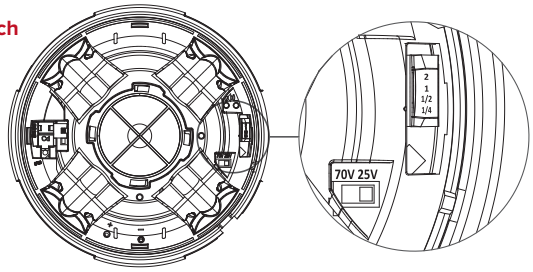

OPERATING CURRENT

Strobes

Strobe setting	16 to 33 VDC	16 to 33 VFWR
135, 150, 177, 185	53 mA	68 mA

Note: Current draw is the same for all candela settings

SOUND OUTPUT

Sound Level Output (dBA) at 3.05 m (10 ft.)

Voltage setting	Wattage setting	Reverberant (UL 1480)	Anechoic (CAN/ ULC-S541)
25V / 70V	¼W	78	77
	½W	81	80
	1W	84	83
	2W	87	85

Sound Pattern (ULC)

Axis	Angle	Change in output
Horizontal	120° and 60°	–3 dBA
	140° and 40°	–6 dBA
Vertical	120° and 60°	–3 dBA
	145° and 40°	–6 dBA

LIGHT DISTRIBUTION

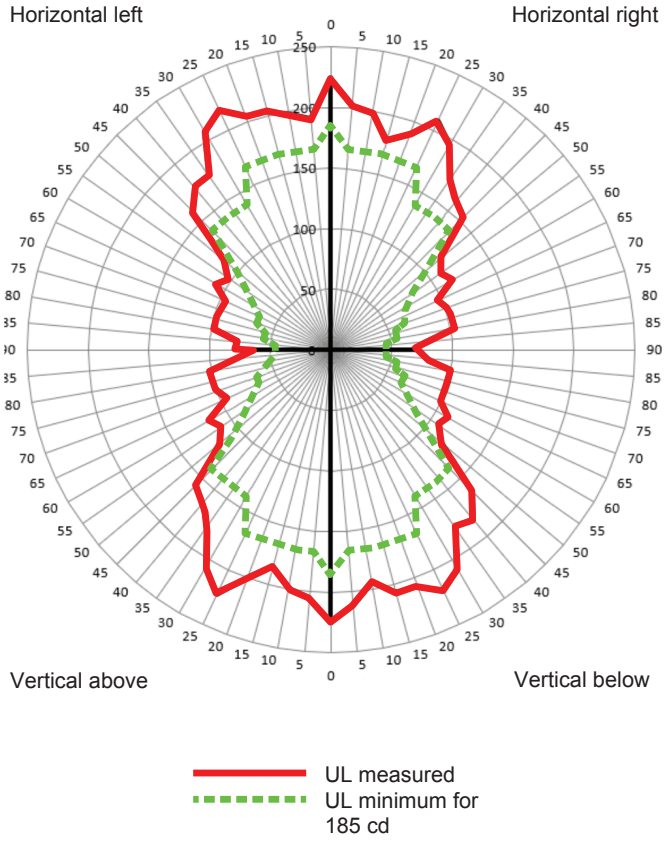

ORDERING INFORMATION

Notification Appliances		Color	Marking
Strobes	EGCVHRF	Red	FIRE
	EGCVHRN	Red	None
	EGCVHWF	White	FIRE
	EGCVHWN	White	None
Speaker-Strobes	EGCSVHRF	Red	FIRE
	EGCSVHRN	Red	None
	EGCSVHWF	White	FIRE
	EGCSVHWN	White	None
	EGCSVHWA	White	ALERT

Replacement Appliance Covers		Color	Marking
Strobe Covers	EGCVRF-CVR	Red	FIRE
	EGCVWA-CVR	White	ALERT
	EGCVWF-CVR	White	FIRE
	EGCVWN-CVR	White	None
Speaker-Strobe Covers	EGCSVRF-CVR	Red	FIRE
	EGCSVRN-CVR	Red	None
	EGCSVWA-CVR	White	ALERT
	EGCSVWF-CVR	White	FIRE
	EGCSVWN-CVR	White	None

Accessories

	GRSW-10	Room Side Wiring Plate (required and included with device)		EGCTR	Trim plate, EGC Series, red		EGCTW	Trim plate, EGC Series, white
	GOCT	4-inch octagon box Adapter Plate		27193-21	Two-gang surface mount box, red		27193-26	Two-gang surface mount box, white

EGRT-10 Genesis LED Device / Cover Removal Tool 10 pack

Model Number Syntax, Appliances

EGCSVHRF

Genesis Series
EGC = Ceiling mount appliances

Housing Color
R = Red
W = White

Housing Marking
N = None
F-FR = FEU/FIRE
F-SP = FUEGO
F = FIRE
A = ALERT*

Candela Rating
H = High Candela

Functions
V = Strobe only
SV = Speaker-Strobe

*ALERT Marking available on white strobe model only.
See replacement covers for more options.

Model Number Syntax, Replacement Covers

EGCSVRF-CVR

Genesis Series
EGC = Ceiling mount appliances

Housing Color
R = Red
W = White

Cover Designation

Cover Marking
N = None
F-FR = FEU/FIRE
F-SP = FUEGO
F = FIRE
A = ALERT

Functions
V = Strobe only
SV = Speaker-Strobe

Note: EGCV & EGCSV ceiling mount appliance covers are compatible with EGCVH & EGCSVH Series Ceiling High Candela appliances.

FIRE ALARM SYSTEMS.
POWERED BY PARTNERSHIP.*

SPECIFICATIONS

Strobe operating voltage	16 to 33 VDC, 16 to 33 VFWR
Speaker operating voltage	25VRMS of 70VRMS (selectable)
Speaker frequency response (UL rated)	400Hz-4,000Hz
Speaker frequency response (nominal)	100Hz-11,000Hz
Light output	135, 150, 177,or 185 candela
Strobe flash rate	1 fps (flash per second) approx.
Synchronization	20 Ω max. between any two devices. To determine allowed wire resistance, refer to these specifications, and the specifications for the synchronized signal source.
Synchronization Sources	CC1S/MCC1S Series Signal Modules[2], Universal Class A/B modules[2], FXNAC[2], Booster and Auxiliary Power Supplies, Intelligent and Conventional Control Panels
Wire size	12 to 18 AWG (0.75 to 2.50 mm^2)
Dimensions (Ø × D)	6.8 x 1.82 in (17.27 x 4.62 cm)
Compatible electrical boxes[1]	2-gang, 4-inch square, 4-inch octagon with GOCT adapter plate
Trim plates	EGCTR, EGCTW 10.6 × 0.3 in. (26.92 × 0.76 cm)
Wiring plate	GRSW (Catalog number: GRSW-10, Pack of 10)
Operating environment	
Temperature	32 to 122°F (0 to 50°C)
Relative humidity	0 to 93% noncondensing
Storage Temperature	-40 to 158 F (-40 to 70 C)
RAL Color	Red=RAL 3013 White=RAL 9002
Environmental Compliance	RoHS directive 2011/65/EU

[1] Electrical boxes must be at least 1-1/2 in. (3.81 cm) deep.
[2] Compatibility for these modules limited to 25 appliances

CONTACT US

Phone: 888.244.9979 (Option 4)
Email: kidde.fire@kgsolutions.com
Website: kidde-esfire.com

8985 Town Center Pkwy,
Bradenton, FL 34202

©2025 Walter Kidde Portable Equipment, LLC
All rights reserved.

*Kidde Commercial and its authorized resellers/distributors are separate and independent entities. This relationship between vendor and reseller/distributor does not constitute a legal partnership or create any shared liability between companies.

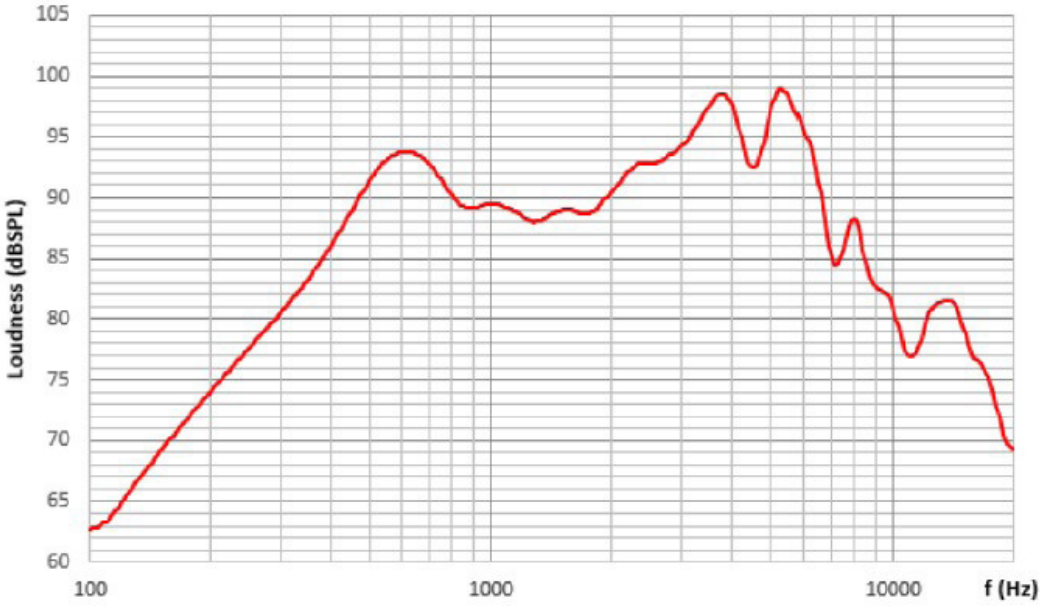

Typical Frequency response @ 1W/1m

08-11-25