KIDDE™ COMMERCIAL

FIRE ALARM SYSTEMS.
POWERED BY PARTNERSHIP.*

WALL MOUNT SPEAKERS AND SPEAKER-STROBES

GENESIS LED EG4S SERIES

S218, S5389

7320-1657:0516

FM APPROVED

OVERVIEW

Genesis LED EG4S Series speakers and speaker-strobes combine high performance output with a sleek low profile design and energy-efficient technology that makes them less expensive to install and operate. High performance LEDs require fewer power supplies, backup power, and batteries. These new appliances are designed with energy-efficiency, and life safety in mind.

Speakers feature selectable wattage taps, while speaker-strobes allow for both wattage and light output levels to be configured in the field. Both settings remain clearly visible — even after final installation. Speakers are also capable of both 25V and 70V and voltage in a single model with a field selectable switch. All this flexibility allows devices to be easily fine-tuned to exactly how they're needed to perform. All Genesis speakers include a DC blocking capacitor to allow electrical supervision of the audio distribution circuit.

Genesis LED EG4S Series uses high efficiency optics, combined with patented electronics, to deliver a highly controlled and efficiently focused light distribution pattern in exchange for lower current requirements. Strobes feature field-selectable 15, 30, 75, or 110 cd light output.

Compared with Xenon-type strobes, Genesis LED EG4S Series appliances offer greatly reduced current draw which provides benefits in longer circuit lengths, more devices per circuit, smaller wire gauge and reduced power supply quantities for an installation. They are also backwards compatible with legacy strobes, so there's no need to replace all your existing devices to upgrade to new LED technology. In fact, EG4S strobes can be mixed on the same circuit and used in the same field of view as Xenon-based strobes. This makes Genesis LED EG4S Series ideal for new installations and retrofits alike.

Field-configurable sound output levels provide the flexibility modern life safety projects demand, while the Genesis LED control protocol keeps multiple strobes on compatible NAC circuits synchronized to well within NFPA 72 requirements. They also meet NFPA and UL 520Hz requirements for sleeping areas making them ideal for new construction or retrofits.

EG4S Series speakers produce crisp, clear voice audio output that is highly intelligible over large areas. In an emergency, intelligibility is critical to life safety. Understanding the content of the message is as important as knowing there is an emergency. Intelligibility is measured in Speech Transmission Index and anything above .76 is considered excellent. EG4S Series speakers deliver audio with an STI of .81 ensuring the message is clear.

Serviceability is another area where EG4S Series appliances shine. The universal room side wiring plate allows for pre-installation and electrical wiring as well as checking continuity with the included diagnostics check bar. EG4S Series devices can then be easily snapped into place with the confidence of knowing the wiring is correct. The innovative under-cover diagnostic test points provide easy access to device circuit testing while mounted.

*Kidde Commercial and its authorized resellers/distributors are separate and independent entities. This relationship between vendor and reseller/distributor does not constitute a legal partnership or create any shared liability between companies.

STANDARD FEATURES

High Fidelity performance with excellent STI

- Increased sound fidelity and audio intelligibility with an STI rating of .81 (More than .76 is excellent)

Low Frequency (520Hz) capable

- Low frequency output meets NFPA standards for newly constructed commercial sleeping areas

High Performance LED Strobe Technology

- Ultra low device current consumption allows:
  - More devices per circuit
  - Ability to use lower gauge wire
  - Longer wire runs
  - Fewer booster power supplies
- High efficiency optics
- Selectable 15, 30, 75, or 110 cd light output
- LED devices may be mixed with legacy Xenon strobes on the same circuit and in the same field of view

Field flexibility

- Speakers are also capable of both 25V and 70V and voltage in a single model with a field selectable switch
- Speakers feature selectable wattage taps for ¼W, ½W, 1W, and 2W to configure sound output levels in the field

Low-profile Design

- Ultra-slim... protrudes about 1.5" from the mounting surface
- Attractive appearance... no visible mounting screws

Multiple Marking Options

- Order in red or white with or without FIRE markings
- Change markings at any time with replaceable quick-swap covers

Easy to Install

- Pre-install and pre-wire with convenient universal room side wiring plate
- Check electrical continuity on room side wiring plate with included diagnostics check bar
- Diagnostics port streamlines device circuit testing
- Fits 2-gang and 4-inch square electrical boxes
- Optional red and white trim plates available
- Slide switches for field configuration
- 12 to 18 AWG in-out screw terminals for quick wiring

Current draw is the same for all candela output settings

- Easier for new system design
- Flexible for future changes in light output needs

APPLICATION

Strobes

Genesis EG4S Series strobes are UL 1971-listed for use indoors as wall-mounted public-mode notification appliances for the hearing impaired. Prevailing codes require strobes to be used where ambient noise conditions exceed 105 dBA (87 dBA in Canada), where occupants use hearing protection, and in areas of public accommodation as defined in the *Americans with Disabilities Act.*

Synchronization is important in order to avoid triggering seizures in people with photosensitive epilepsy. All Genesis strobes exceed UL synchronization requirements (within 10 milliseconds over a two-hour period) when used with a synchronization source. See the specifications table for a list of compatible sources.

Speakers

The suggested sound pressure level for each signaling zone used with alert or alarm signals is a minimum of 15 dB above the average ambient sound level or 5 dB above the maximum sound level having a duration of at least 60 seconds, whichever is greater. This is measured 5 feet (1.5 m) above the floor.

Doubling the distance from the signal to the ear will theoretically cause a 6 dB reduction in the received sound pressure level. The actual effect depends on the acoustic properties of materials in the space. Doubling the power output of a device (e.g.: a speaker from 1W to 2W) will increase the sound pressure level by 3dBA.

High Fidelity Sound

Genesis LED EG4S Series High Fidelity appliances feature 87dB of sound output along with a highly intelligible Speech Transmission Index (STI) rating of .81. An STI rating above .76 is considered excellent for speech intelligibility. They are also effective in areas subject to high levels of ambient noise.

These appliances are ideal for hotels, dormitories and other residential occupancies that have sleeping areas that require 520Hz tones. In sleeping areas, always ensure that the wattage tap of the speaker is set sufficiently high so that the sound pressure reaches at least 75 dBA at the pillow.

These appliances are part of an end-to-end audio system approved for use in sleeping areas when used in conjunction with approved audio hardware and a factory-supplied 520 Hz tone. Check the System Compatibility List for other 520 Hz signaling requirements.

INSTALLATION

Genesis EG4S speakers and speaker-strobes mount to the required GRSW room side wiring plate. The GRSW mounting plate is included with the device for convenient pre-installing and pre-wiring. The device can be removed easily from the room side wiring plate by pushing up with a screwdriver. The cover can also be removed from the device easily with a screwdriver to access the light and sound output settings and a diagnostics test port for voltage testing.

Genesis LED EG4S Series speakers and speaker-strobes mount to any standard two-gang and 4-inch square electrical box. Matching optional G4T trim rings are available to cover oversized openings. Optional color matched double-gang surface boxes are also available.

Removing Cover

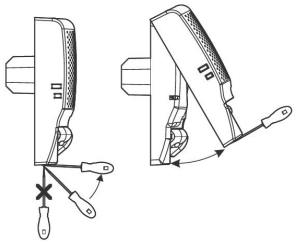

Removing Device

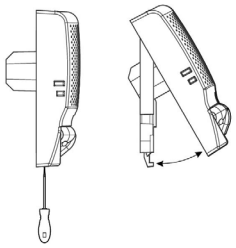

INSTALLATION

Electrical Box

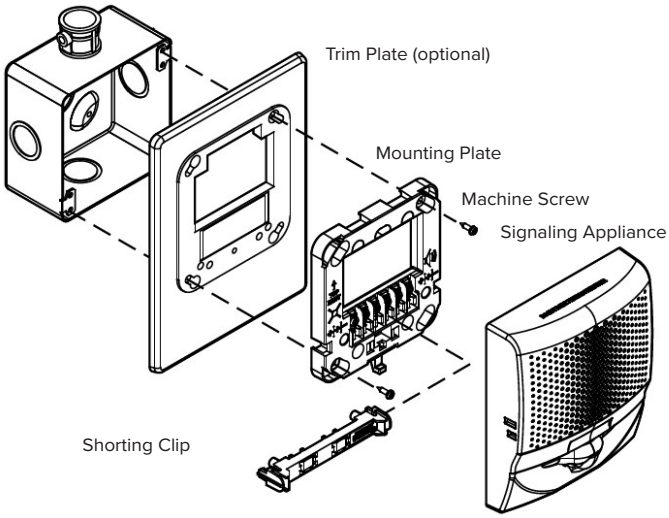

Surface Mount Box

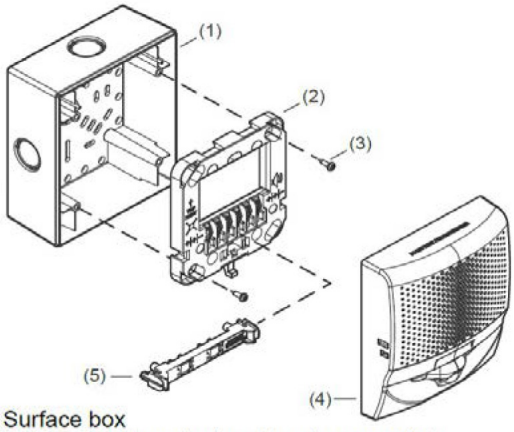

(1) Surface box
(2) Wiring plate (required, ordered separately)
(3) Machine screw (2X, supplied with wiring plate)
(4) Notification appliance
(5) Shorting clip

WIRING

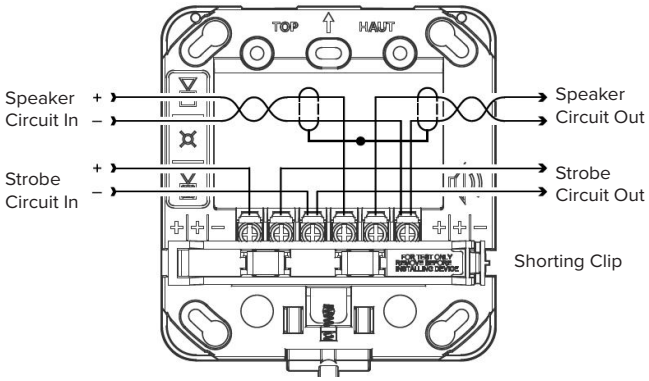

DIMENSIONS

EG4S Notification Appliances

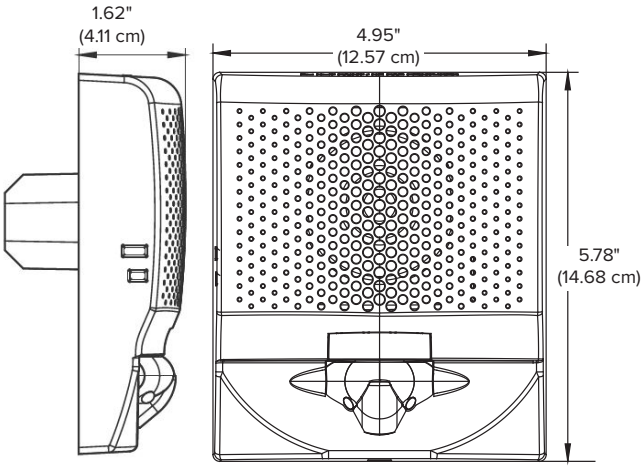

Surface Mount Box

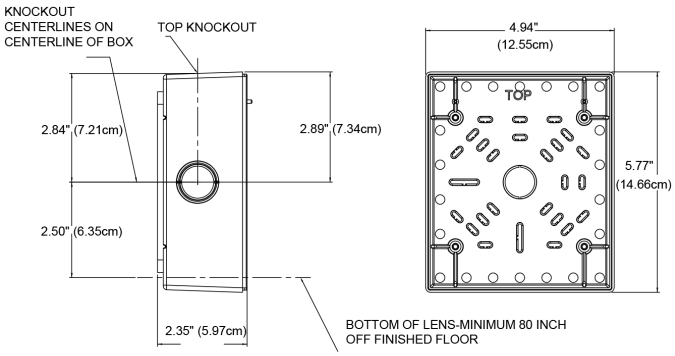

EG4T Trim Plate

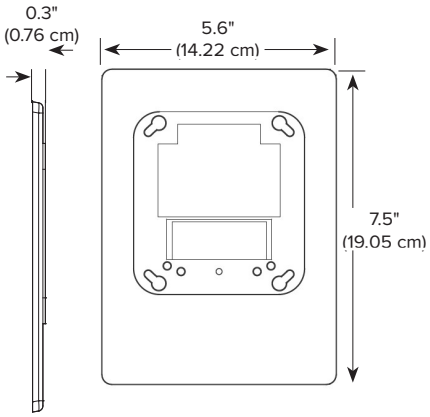

FIELD CONFIGURATION

Genesis LED speakers are capable of both 25V and 70V operation depending on the system, The voltage is set via a switch under the cover. Speakers also may be set for ¼, ½, 1, or 2 watt operation. The wattage setting is visible through a small window on the side of the device and is changed by simply sliding the switch under the cover until the desired setting appears in the window. The speaker does not have to be removed to change the wattage, only the cover skin.

Genesis LED clear strobes and speaker-strobes may be set for 15, 30, 75, or 110 candela output. The output setting is changed by simply removing the cover and sliding the candela switch to the desired setting. The device does not have to be removed from the wall to change the output setting. The setting remains visible through a small window on the left-hand side of the device after the cover is closed.

LIGHT AND SOUND OUTPUT SETTINGS

Light Output Setting (Candela)

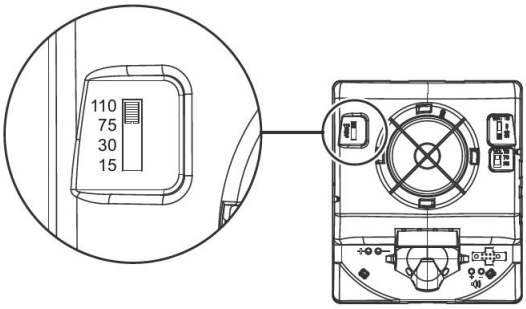

Sound Settings (Watts and Volts)

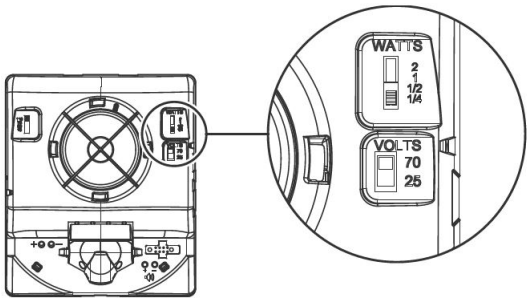

DIAGNOSTICS

Strobe Circuit Test Points

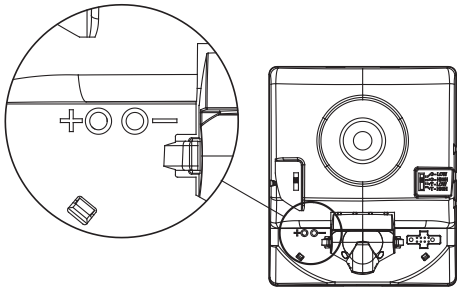

SOUND OUTPUT

Sound pattern (ULC)

Axis	Angle	Change in output
Horizontal	117° and 61°	–3 dBA
	134° and 49°	–6 dBA
Vertical	128° and 68°	–3 dBA
	138° and 52°	–6 dBA

LIGHT DISTRIBUTION

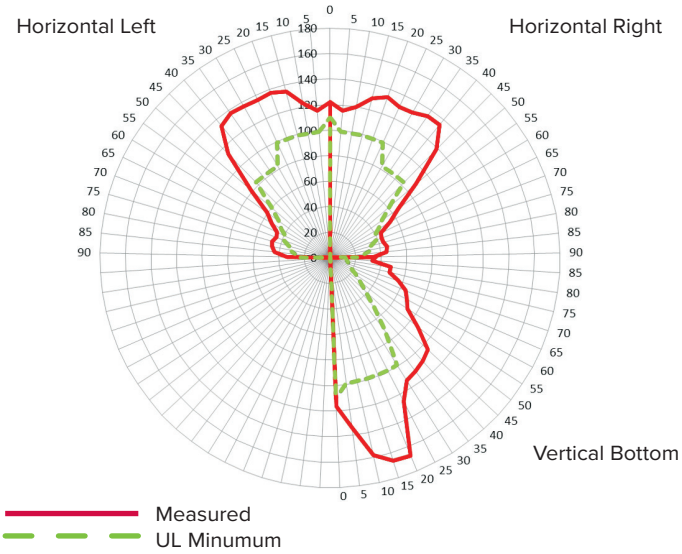

OPERATING CURRENT

Strobes

Strobe setting	16 to 33 VDC	16 to 33 VFWR
15, 30, 75, 110	28 mA	36 mA

Note: Current draw is the same for all candela settings

Sound Level Output

Voltage setting	Wattage setting	Reverberant (UL 1480)	Anechoic (CAN/ ULC-S541)
25V / 70V	¼W	78	78
	½W	81	81
	1W	84	84
	2W	87	87

Speaker Circuit Test Points

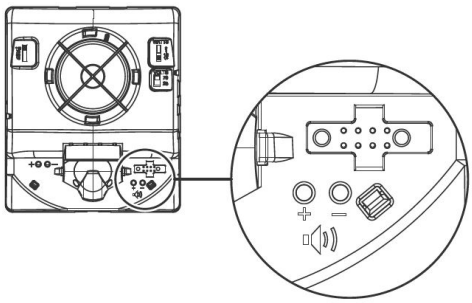

Test points indicated above are used to validate the Notification Appliance Circuit and verify device function.

ORDERING INFORMATION

FOR REFERENCE ONLY

Notification Appliances		Color	Marking
Speakers	EG4SRF	Red	FIRE
	EG4SRN	Red	None
	EG4SWF	White	FIRE
	EG4SWN	White	None
	EG4SWA	White	Alert
Speaker-strobes	EG4SVRF	Red	FIRE
	EG4SVRN	Red	None
	EG4SVWF	White	FIRE
	EG4SVWN	White	None
	EG4SVWA	White	Alert

Replacement Appliance Covers		Color	Marking
Speaker Covers	EG4SRF-CVR	Red	FIRE
	EG4SRN-CVR	Red	None
	EG4SWA-CVR	White	ALERT
	EG4SWF-CVR	White	FIRE
	EG4SWN-CVR	White	None
Speaker-strobe Covers	EG4SVRF-CVR	Red	FIRE
	EG4SVRN-CVR	Red	None
	EG4SVWA-CVR	White	ALERT
	EG4SVWF-CVR	White	FIRE
	EG4SVWN-CVR	White	None

Accessories

	GRSW-10	Room Side Wiring Plate (required and included with device)		EG4TR	Trim plate, G4 Series, red		EG4TW	Trim plate, G4 Series, white
				EG4RSB	Wall 4 inch Surface Mount Box, Red		EG4WSB	Wall 4 inch Surface Mount Box, White

Model Number Syntax, Appliances

EG4SVRF

- **Genesis Series**
  EG4S = Wall mount speakers
- **Housing Color**
  R = Red
  W = White
- **Housing Marking**
  N = None
  F = FIRE
  A = ALERT
- **Functions**
  S = Speaker only
  SV = Speaker-Strobe

Model Number Syntax, Replacement Covers

EG4SVRF-CVR

- **Genesis Series**
  EG4S = Wall mount speakers
- **Housing Color**
  R = Red
  W = White
- **Cover Designation**
- **Cover Marking**
  N = None
  F = FIRE
  A = ALERT
- **Functions**
  S = Speaker only
  SV = Speaker-Strobe

FIRE ALARM SYSTEMS.
POWERED BY PARTNERSHIP.*

CONTACT US

Phone: 888.244.9979 (Option 4)
Email: kidde.fire@kgsolutions.com
Website: kidde-esfire.com

8985 Town Center Pkwy,
Bradenton, FL 34202

©2025 Walter Kidde Portable Equipment, LLC
All rights reserved.

*Kidde Commercial and its authorized resellers/ distributors are separate and independent entities. This relationship between vendor and reseller/ distributor does not constitute a legal partnership or create any shared liability between companies.

SPECIFICATIONS

Strobe operating voltage	16 to 33 VDC, 16 to 33 VFWR
Speaker operating voltage	25VRMS of 70VRMS (selectable)
Speaker frequency response (UL rated)	400Hz-4,000Hz
Speaker frequency response (nominal)	100Hz-11,000Hz
Light output	15, 30, 75, or 110 candela
Strobe flash rate	1 fps (flash per second) approx.
Synchronization	20 Ω max. between any two devices. To determine allowed wire resistance, refer to these specifications, and the specifications for the synchronized signal source.
Synchronization Sources	Kidde CC Series Signal Modules, Booster and Auxiliary Power Supplies, Intelligent and Conventional Control Panels
Wire size	12 to 18 AWG (0.75 to 2.50 mm^2)
Dimensions (W×H×D)	4.95 x 5.78 x 1.62 in (12.57 x 14.68 x 4.11 cm)
Strobe-to-box center offset	-1.70 inches (-4.32 cm)
Compatible electrical boxes [1]	2-gang, 4-inch square
Trim plates	EG4TR, EG4TW (5.6 x 7.5 x 0.3 in (14.22 x 19.05 x 0.76 cm)
Operating environment Temperature Relative humidity	 32 to 122°F (0 to 50°C) 0 to 93% noncondensing
Storage Temperature	-40 to 158 F (-40 to 70 C)
Environmental compliance	RoHS directive 2011/65/EU

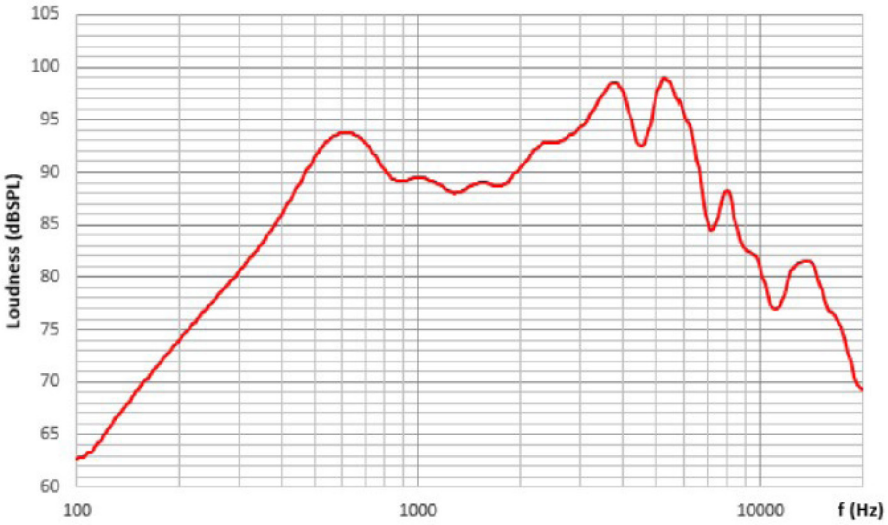

Typical Frequency response @ 1W/1m