KIDDE™ COMMERCIAL

FIRE ALARM SYSTEMS.
POWERED BY PARTNERSHIP.*

WALL MOUNT LOW FREQUENCY HORNS AND HORN-STROBES

GENESIS LED EG4LF SERIES

S218

7125 1657:0504

OVERVIEW

Genesis LED EG4LF Series Low Frequency Horns and Horns-Strobes comply with the low frequency requirements spelled out in NFPA 72 and meet UL 464 520Hz audible tone standards for sleeping areas. They feature a sleek low-profile design and energy-efficient technology that makes them less expensive to install and operate by reducing overhead. High performance LEDs require fewer power supplies, backup power, and batteries. These new appliances are designed with, energy-efficiency and life safety in mind.

Genesis LED EG4LF Series uses high efficiency optics, combined with patented electronics, to deliver a precisely controlled and efficiently focused light distribution pattern in exchange for lower current requirements. Strobes feature field-selectable 15, 30, 75 or 110 candela light output.

Compared with Xenon-type strobes, Genesis LED EG4FL Series appliances need fewer power supplies and often smaller wire gauge, which lightens conduit requirements. They are also backwards compatible with legacy strobes, so there's no need to replace all your existing devices to upgrade to new LED technology. In fact, EG4FL strobes can be mixed on the same circuit and used in the same field of view as Xenon-based strobes. This makes Genesis LED EG4FL Series ideal for new installations and retrofits alike.

Field-configurable sound output levels provide the flexibility modern life safety projects demand, while the Genesis LED control protocol keeps multiple strobes on compatible NAC circuits synchronized to meet or exceed NFPA 72 requirements.

Serviceability is another area where EG4FL Series appliances shine. The universal room side wiring plate allows for pre-installation of the electrical wiring as well as checking continuity with the included diagnostics check bar. EG4FL Series appliances can then be easily snapped into place with the confidence of knowing the wiring is correct. The innovative under-cover diagnostic test points provide easy access to device circuit testing while mounted.

STANDARD FEATURES

- **High Performance LED Strobe Technology**
  - Ultra low device current consumption allows:
  - More devices per circuit
  - Ability to use lower gauge wire
  - Longer wire runs
  - Fewer booster power supplies
  - High efficiency optics
  - Selectable 15, 30, 75, or 110 cd light output
  - LED devices may be mixed with legacy Xenon strobes
- **Current draw is the same for all candela output settings**
  - Easier for new system design
  - Flexible for future changes in candela output needs
- **Low Frequency (520Hz) Audible Output**
  - Low frequency output meets NFPA standards for newly constructed commercial sleeping areas
  - Selectable high or low dB horn output
  - Selectable temporal or steady horn output
  - Improved audio frequency range for better wall penetration
- **Low-profile Design**
  - Ultra-slim... protrudes about 1.5" from the mounting surface
  - Attractive appearance... no visible mounting screws
- **Multiple "FIRE" Marking Options**
  - Order English, French, Spanish or no FIRE markings
  - Change markings at any time with replaceable quick-swap covers
  - Custom color UL / ULC listed non marked covers to match architectural or design requirements are available
- **Easy to Install**
  - Pre-install and pre-wire with convenient universal room side wiring plate
  - Check electrical continuity on room side wiring plate with included diagnostics check bar
  - Diagnostics port streamlines device circuit testing
  - Fits 1-gang, 2-gang, 4-inch square, and 4-inch octagon electrical boxes
  - Optional red and white trim plates available
  - Slide switches for field configuration
  - 12 to 18 AWG in-out screw terminals for quick wiring

*Kidde Commercial and its authorized resellers/distributors are separate and independent entities. This relationship between vendor and reseller/distributor does not constitute a legal partnership or create any shared liability between companies.

AUDIBLE SIGNAL APPLICATION

Genesis LED EG4FL Series notification appliances are UL 464-listed for 520Hz low-frequency audible requirements and suitable for sleeping areas as per NFPA 72.

Most codes and regulations now call for low-frequency audible appliances (520 Hz) in existing and newly constructed sleeping rooms and require strobe lights under some of these circumstances. Consult with your Authority Having Jurisdiction for details. For sleeping rooms, most codes and standards require 75 dBA-fast at the pillow.

Genesis Low Frequency 520Hz horn output reaches as high as 83 dBA and features an improved audio frequency range compared with other Genesis horns. This results in excellent sound penetration through walls and a clear warning of danger for sleeping areas. Horn only models may be configured for either coded or non-coded notification appliance circuits. They can also be set for high or low dBA output. This setting reduces horn output by about 5 dBA. Horn-only models may be ceiling-mounted or wall-mounted.

For non-sleeping rooms, the suggested sound pressure level for each signaling zone used with alarm signals is at least 15 dBA above the average ambient sound level, or 5 dBA above the maximum sound level having a duration of at least 60 seconds, whichever is greater. These values are measured at five feet (1.5 m) above the floor. The average ambient sound level is A-weighted, fast response sound pressure measured over a 24-hour period.

Doubling the distance from the signal to the ear will theoretically result in a 6 dBA reduction of the received sound pressure level. The actual effect depends on the acoustic environment in the space. A 3 dBA difference represents a barely noticeable change in volume.

VISIBLE SIGNAL APPLICATION

Genesis LED EG4FL Low Frequency horn-strobes are UL 464-listed and are also UL 1971-listed for use indoors as wall-mounted public-mode notification appliances for the hearing impaired. Prevailing codes require strobes to be used where ambient noise conditions exceed 105 dBA (87 dBA in Canada), where occupants use hearing protection, and in areas of public accommodation as defined in the Americans with Disabilities Act.

Combination audible-visible appliances are installed in accordance with guidelines established for visible (strobe) devices.

For sleeping rooms as outlined by NFPA , a strobe is generally required within 16 feet of the pillow. Genesis LED EG4LF low-frequency horn-strobes are designed to meet these standards, offering light output of up to 110 candela, these units are compliant with NFPA wall-mounting requirements for sleeping rooms, with mounting positions set at or farther than 24 inches (610 mm) from the ceiling, ensuring optimal performance for occupant safety.

Synchronization is important to avoid triggering seizures in people with photosensitive epilepsy. All Genesis strobes exceed UL synchronization requirements (within 10 milliseconds over a two-hour period) when used with a synchronization source. See the specifications table for a list of compatible sources.

KIDDE COMMERCIAL recommends that these devices always be installed in accordance with the latest recognized edition of national and local codes. Refer to the appropriate codes and standards for mounting height information.

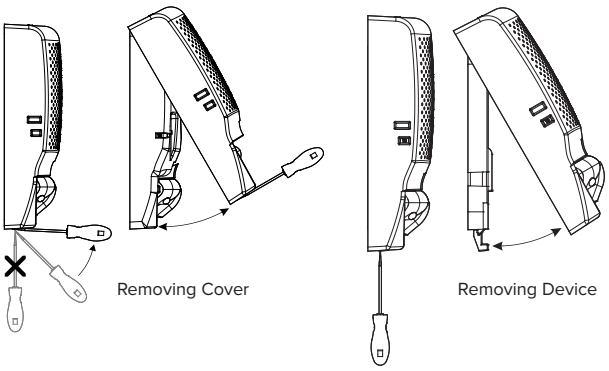

INSTALLATION

Genesis LED EG4FL Low Frequency horns and horn-strobes mount to the required GRSW room side wiring plate. The GRSW mounting plate is included with the device for convenient pre-installing and pre-wiring. The device can be removed easily from the room side wiring plate by pushing up with a flat tip screwdriver or using the GRT Genesis LED Removal Tool ordered separately in packs of 10 (GRT-10). The cover can also be removed from the device easily with a flat tip screwdriver or using the GRT Genesis LED Removal Tool to access the light and sound output settings and a diagnostics test port for voltage testing.

Genesis LED EG4FL Series Low Frequency horns and horn-strobes mount to any standard one-gang, two-gang, 4-inch square, and 4-inch octagon electrical box. Matching optional G4T trim rings are available to cover oversized openings. Optional color matched double-gang surface boxes are also available.

When installing Genesis LED EG4LF series appliances onto 4-inch octagon boxes, Genesis GOCT Octagon Adapter is required to ensure seamless mounting. The GOCT attaches to the GRSW wiring plate, guaranteeing a secure and efficient setup.

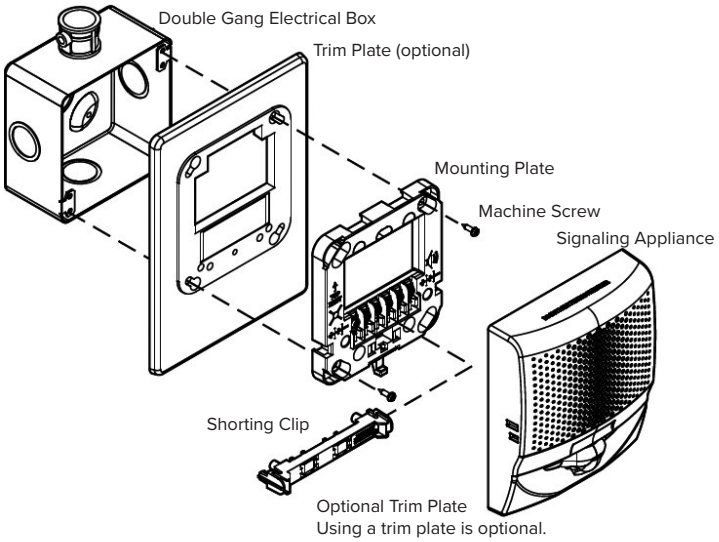

4-inch square Electrical Box

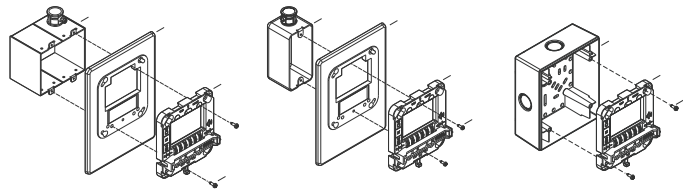

Two-gang Electrical Box | One-gang Electrical Box | Typical Surface Box Mounting

WIRING

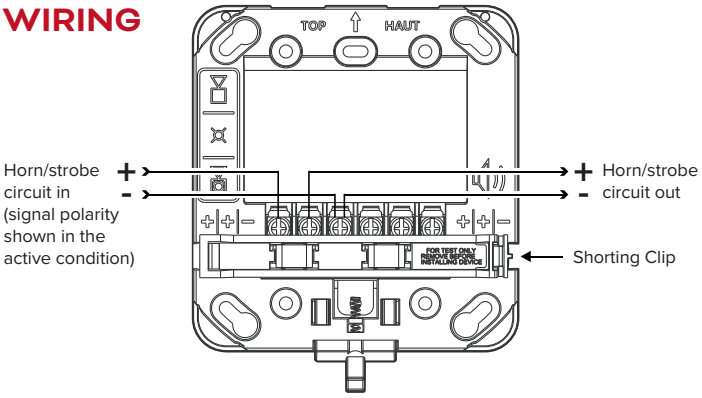

DIMENSIONS

EG4 Notification Appliances

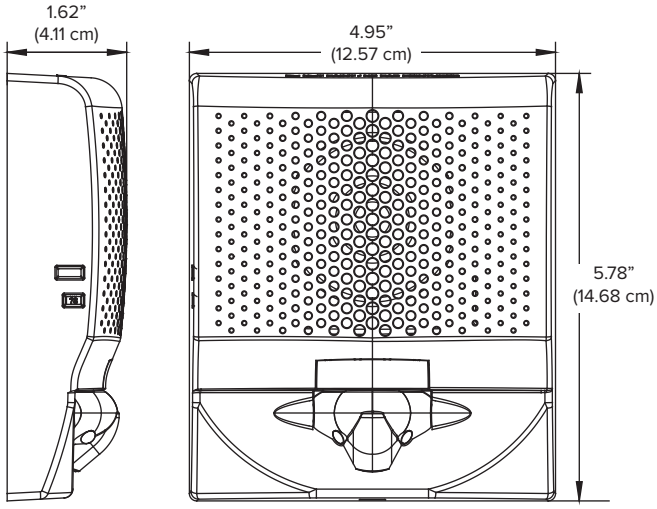

EG4T Trim Plate (optional)

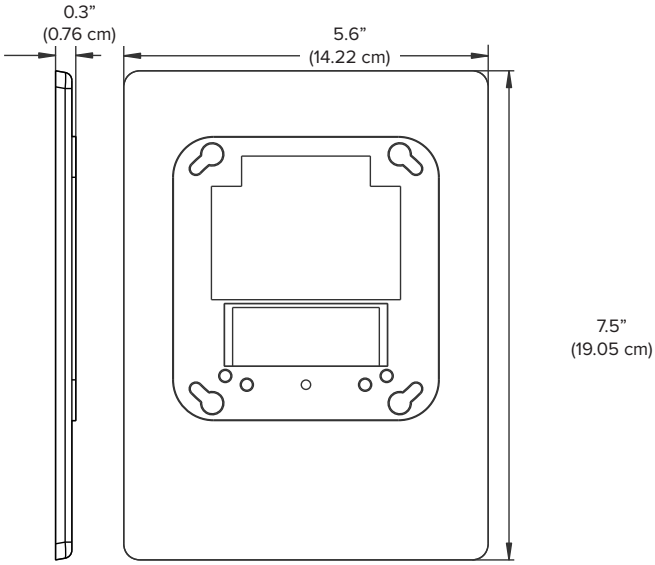

DIAGNOSTICS

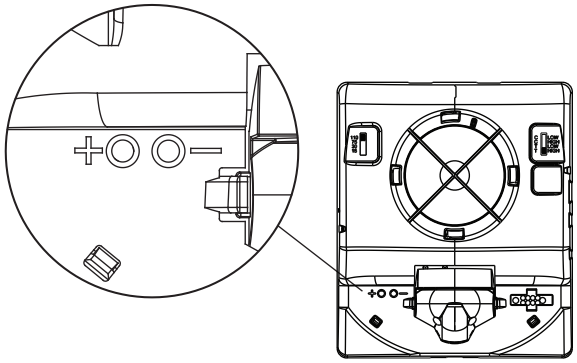

Test points indicated above are used to validate the Notification Appliance Circuit and verify device function.

FIELD CONFIGURATION

Temporal Low Frequency horn and horn-strobe models are factory set to sound ina three-pulse temporal pattern. By sliding the tone selector switch, horn only models may be configured for constant horn output that can be coded at precise intervals by KIDDE COMMERCIAL control panels and control modules.

Note: Temporal 3 coding is the required output for fire notification devices per NFPA 72. Any device coding other than temporal 3 is at the discretion and approval of the local authority having jurisdiction (AHJ).

Low Frequency horns and horn-strobes are factory set for high dB output. Low dB output may be selected by sliding the tone selector switch. This reduces the output by about 6 dBA.

Genesis LED clear strobes and horn-strobes may be set for 15, 30, 75, or 110 candela output. The output setting is changed by simply removing the cover and sliding the candela switch to the desired setting. The device does not have to be removed from the wall to change the output setting. The setting remains visible through a small window on the left-hand side of the device after the cover is closed.

Light and Sound Output Settings

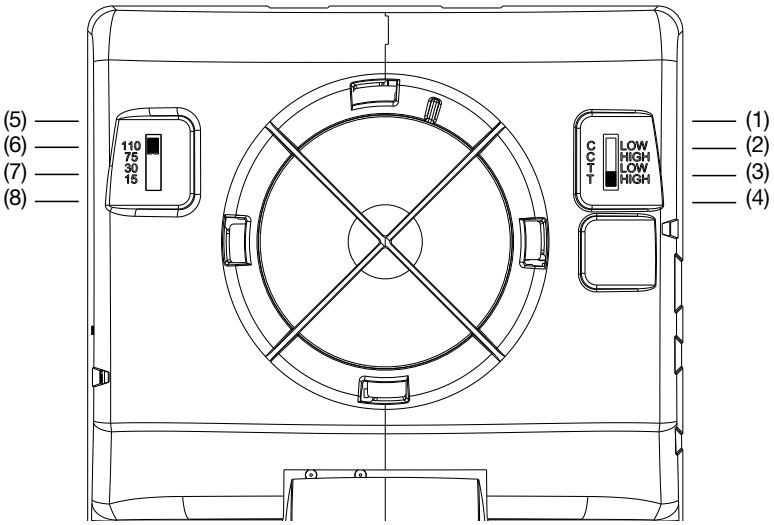

(1) Constant, low dB
(2) Constant, high dB
(3) T3 temporal, low dB
(4) T3 temporal, high dB
(5) 110 candela
(6) 75 candela
(7) 30 candela
(8) 15 candela

OPERATING CURRENT

Horns

Sound setting	16 to 33 VDC	16 to 33 VFWR
C-Low, T-Low	43 mA	82 mA
C-High, T-High	123 mA	198 mA

Horn-Strobes

Strobe setting	Sound setting	16 to 33 VDC	16 to 33 VFWR
15, 30, 75, 110	C-Low, T-Low	66 mA	103 mA
	C-High, T-High	159 mA	230 mA

SOUND OUTPUT

Horn & Horn-Strobe

Sound setting	Low dB(A)	High dB(A)
Continuous/Temporal	78 dBA	83 dBA

Sound pattern (ULC)

Axis	Angle	Change in output
Horizontal	+/– 42	–3 dBA
	+/– 75	–6 dBA
	+/– 90	–8.3 dBA
Vertical	+/– 37	–3 dBA
	+/– 81	–6 dBA
	+/– 90	–7.3 dBA

LIGHT DISTRIBUTION

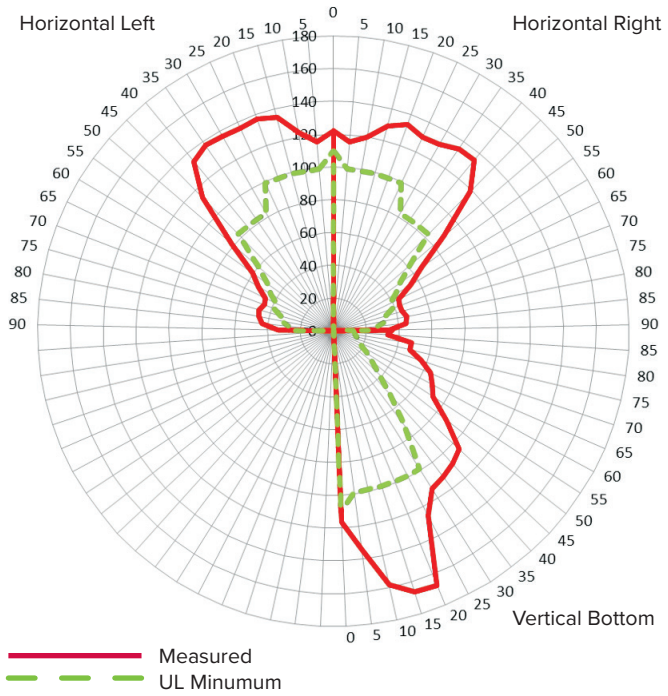

SPECIFICATIONS

Operating voltage	16 to 33 VDC, 16 to 33 VFWR
Horn signal type	Constant or TC3 temporal
Light output	15, 30, 75, or 110 candela
Strobe flash rate	1 fps (flash per second) approx.
Synchronization	20 Ω max. between any two devices. To determine allowed wire resistance, refer to these specifications, and the specifications for the synchronized signal source.
Synchronization Sources	CC1S/MCC1S Series Signal Modules, Booster and Auxiliary Power Supplies, Intelligent and Conventional Control Panels
Wire size	12 to 18 AWG (0.75 to 2.50 mm^2)
Dimensions (W×H×D)	4.95 x 5.78 x 1.62 in (12.57 x 14.68 x 4.11 cm)
Strobe-to-box center offset	-1.70 inches (-4.32 cm)
Compatible electrical boxes [1]	1-gang, 2-gang, 4-inch square, 4-inch octagon with GOCT adapter plate, surface mount G4RSB, G4WSB
Trim plates	G4TR, G4TW (5.6 x 7.5 x 0.3 in (14.22 x 19.05 x 0.76 cm))
Wiring plate	GRSW (Catalog number: GRSW-10, Pack of 10)
Operating environment Temperature Relative humidity	 32 to 122°F (0 to 50°C) 0 to 93% noncondensing
Environmental class	Indoor, dry
Storage Temperature	-40 to 158 F (-40 to 70 C)
RAL Color	Red=RAL 3013 White=RAL 9002
Environmental Compliance	RoHS directive 2011/65/EU
Industry Canada compliance	This Class A digital apparatus complies with Canadian ICES-003

[1] Electrical boxes must be at least 1-1/2 in. (3.81 cm) deep.

ORDERING INFORMATION

FOR REFERENCE ONLY

Notification Appliances		Color	Marking
Low Frequency Horns	EG4LFRF	Red	FIRE
	EG4LFRN	Red	None
	EG4LFWF	White	FIRE
	EG4LFWN	White	None
Low Frequency Horn-strobes	EG4LFVRF	Red	FIRE
	EG4LFVRN	Red	None
	EG4LFVWF	White	FIRE
	EG4LFVWN	White	None

Replacement Appliance Covers		Color	Marking
Horn Covers	EG4ARA-CVR	Red	ALERT
	EG4ARF-CVR	Red	FIRE
	EG4ARN-CVR	Red	None
	EG4AWA-CVR	White	ALERT
	EG4AWF-CVR	White	FIRE
	EG4AWN-CVR	White	None
Horn-strobe Covers	EG4AVRA-CVR	Red	ALERT
	EG4AVRF-CVR	Red	FIRE
	EG4AVRN-CVR	Red	None
	EG4AVWA-CVR	White	ALERT
	EG4AVWF-CVR	White	FIRE
	EG4AVWN-CVR	White	None

Accessories

	GRSW-10	Room Side Wiring Plate (required and included with device)		EG4TR	Trim plate, G4 Series, red		EG4TW	Trim plate, G4 Series, white
	GOCT	4-inch octagon box Adapter Plate		EG4RSB	Wall 4 inch Surface Mount Box, Red		EG4WSB	Wall 4 inch Surface Mount Box, White
	EGRT-10	Genesis LED Device / Cover Removal Tool 10 pack						

Model Number Syntax, Appliances

EG4LFVRF

- Genesis Series
  - **EG4** = Wall mount appliances
- Housing Color
  - **R** = Red
  - **W** = White
- Housing Marking
  - **N** = None
  - **F-FR** = FIRE/FEU
  - **F-SP** = FUEGO
  - **F** = FIRE
  - **A** = ALERT*
- Functions
  - **LF** = Low Frequency Horn only
  - **LFV** = Low Frequency Horn-Strobe

* ALERT Marking available. See replacement covers for more options.

Model Number Syntax, Replacement Covers

EG4AVRF-CVR

- Genesis Series
  - **EG4** = Wall mount appliances
- Housing Color
  - **R** = Red
  - **W** = White
- Cover Designation
- Cover Marking
  - **N** = None
  - **F-FR** = FIRE/FEU
  - **F-SP** = FUEGO
  - **F** = FIRE
  - **A** = ALERT
- Functions
  - **A** = Audible only
  - **AV** = Audible-Visible

Note: EG4A & EG4AV wall mount appliance covers are compatible with EG4LF & EG4LFV Series Wall Low Frequency appliances.

FIRE ALARM SYSTEMS.
POWERED BY PARTNERSHIP.*

CONTACT US

Phone: 888.244.9979 (Option 4)
Email: kidde.fire@kgsolutions.com
Website: kidde-esfire.com

8985 Town Center Pkwy,
Bradenton, FL 34202

©2025 Walter Kidde Portable Equipment, LLC
All rights reserved.

*Kidde Commercial and its authorized resellers/distributors are separate and independent entities. This relationship between vendor and reseller/distributor does not constitute a legal partnership or create any shared liability between companies.

08-14-25