KIDDE™ COMMERCIAL

FIRE ALARM SYSTEMS.
POWERED BY PARTNERSHIP.*

GENESIS LED EG1 SERIES

COMPACT NOTIFICATION DEVICES

S218, S5389

7125-1657:0506
7135-1657:0502

OVERVIEW

Genesis LED EG1 Series horns and LED strobes feature a sleek low profile design and energy-efficient technology that makes them less expensive to install and operate by reducing overhead. High performance LEDs require fewer circuits and power supplies. These new appliances are designed with energy-efficiency and life safety in mind.

Genesis LED EG1 Series uses high efficiency optics, combined with patented electronics, to deliver a highly controlled and efficiently focused light distribution pattern in exchange for lower current requirements. Strobes feature field-selectable 15, 30, or 75 cd light output.

Compared with Xenon-type strobes, Genesis LED EG1 Series appliances need fewer power supplies and often smaller wire gauge, which lightens conduit requirements. They are also backwards compatible with legacy strobes, so there's no need to replace all your existing devices to upgrade to new LED technology. In fact, EG1 strobes can be mixed on the same circuit and used in the same field of view as Xenon-based strobes. This makes Genesis LED EG1 Series ideal for new installations and retrofits alike.

Field-configurable sound output levels provide the flexibility modern life safety projects demand, while the Genesis LED control protocol keeps multiple strobes on compatible NAC circuits synchronized to well within NFPA 72 requirements.

Serviceability is another area where EG1 Series appliances shine. The innovative under-cover diagnostic test points provide easy access to device circuit testing while mounted.

STANDARD FEATURES

High Performance LED Strobe Technology

- Ultra low device current consumption
- High efficiency optics
- Selectable 15, 30, or 75 cd light output
- LED devices may be mixed with legacy Xenon strobes

Efficient Audible Output

- Selectable high or low dB horn output
- Selectable temporal or steady horn output
- Improved audio frequency range for better wall penetration

Low-profile Design

- Compact design—single gang mounting
- Ultra-slim—protrudes about 1" from the mounting surface
- Attractive appearance—no visible mounting screws

Multiple Cover Options

- Order with FIRE markings or no FIRE markings in both red and white
- Change markings at any time with quick-swap covers

Easy to Install

- Diagnostic test points streamline device circuit testing
- Fits standard 1-gang electrical boxes, no trim ring needed
- Optional trim ring available for 4-inch square boxes
- Slide switches for field configuration
- 12 to 18 AWG in-out screw terminals for quick wiring

*Kidde Commercial and its authorized resellers/distributors are separate and independent entities. This relationship between vendor and reseller/distributor does not constitute a legal partnership or create any shared liability between companies.

APPLICATION

Strobes

Genesis LED EG1 Series strobes are UL 1971-listed for use indoors as wall-mounted public-mode notification appliances for the hearing impaired. Prevailing codes require strobes to be used where ambient noise conditions exceed 105 dBA (87 dBA in Canada), where occupants use hearing protection, and in areas of public accommodation as defined in the *Americans with Disabilities Act.*

Synchronization is important in order to avoid epileptic sensitivity. All Genesis LED strobes exceed UL synchronization requirements (within 10 milliseconds over a two-hour period) when used with a synchronization source. See the specifications table for a list of compatible sources.

Horns

Genesis LED horn output reaches as high as 92 dBA and features an improved audio frequency range compared with other Genesis LED horns. This results in excellent sound penetration through walls and a clear warning of danger. They can also be set for high or low dBA output. This setting reduces horn output by about 6 dBA. Horn-only models may be ceiling-mounted or wall-mounted and may be configured for either coded or non-coded notification appliance circuits.

The suggested sound pressure level for each signaling zone used with alarm signals is at least 15 dBA above the average ambient sound level, or 5 dBA above the maximum sound level having a duration of at least 60 seconds, whichever is greater. These values are measured at five feet (1.5 m) above the floor. The average ambient sound level is A-weighted, fast response sound pressure measured over a 24-hour period.

Doubling the distance from the signal to the ear will theoretically result in a 6 dBA reduction of the received sound pressure level. The actual effect depends on the acoustic properties of materials in the space. A 3 dBA difference represents a barely noticeable change in volume.

INSTALLATION

All Genesis LED devices come with mounting screws for easy installation. The tab at the bottom of the device unlocks the cover to reveal the mounting holes. The shallow depth of Genesis LED devices leaves ample room behind them for extra wiring. Once installed with the cover in place, no mounting screws are visible.

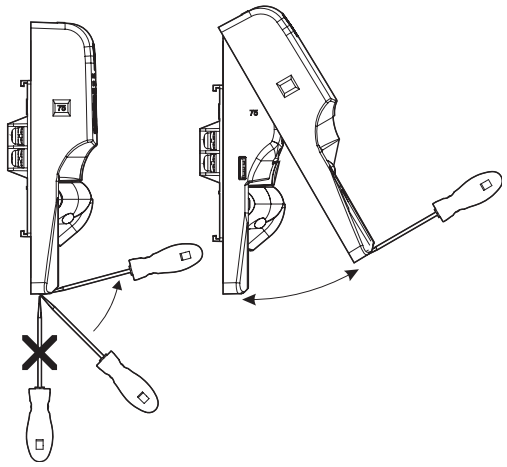

Genesis LED EG1 Series horns and strobes mount to any standard one-gang surface or flush electrical box. Matching optional EG1T trim rings are available to cover oversized openings and can accommodate one-gang or four-inch square boxes. Optional color matched single-gang surface boxes are also available.

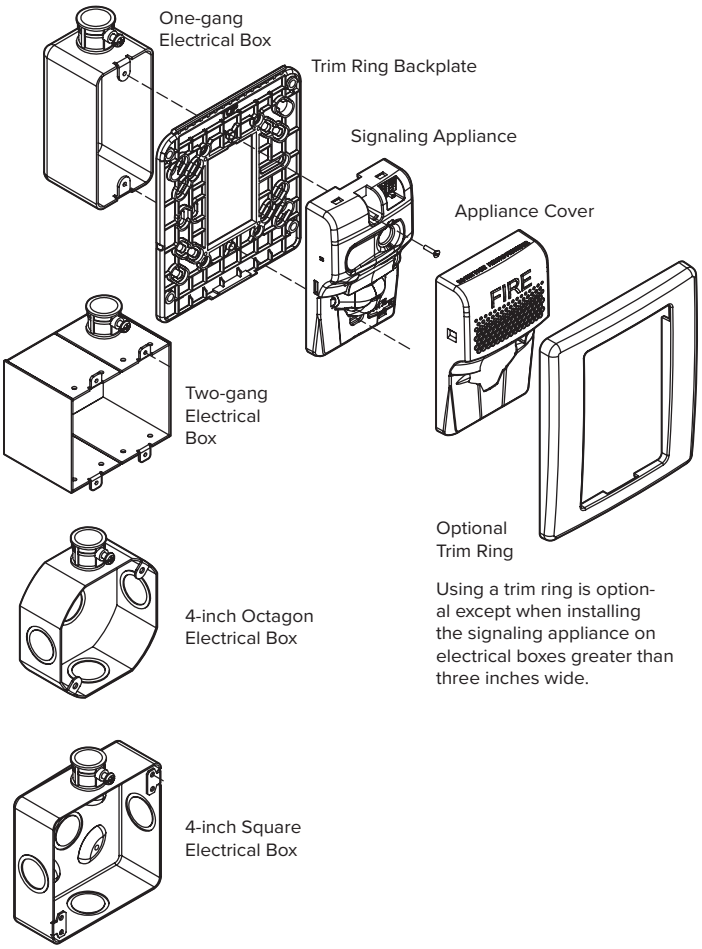

Using a trim ring is optional except when installing the signaling appliance on electrical boxes greater than three inches wide.

WIRING

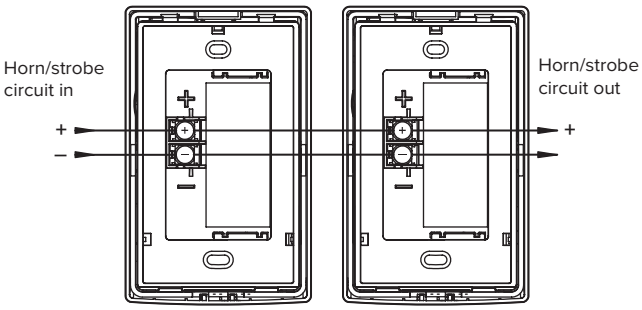

Signal polarity shown in the active condition.

DIMENSIONS

EG1 Notification Appliances

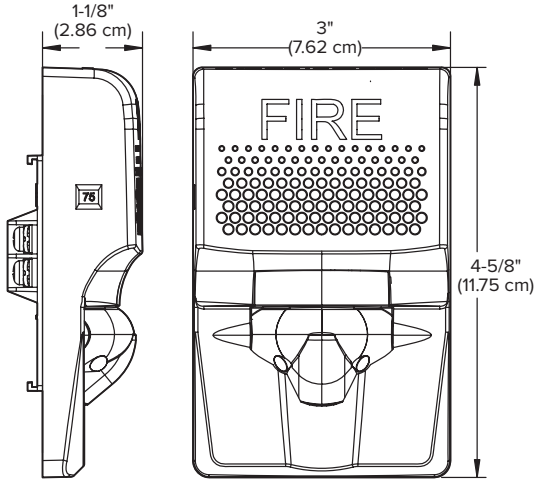

EG1T Trim Ring

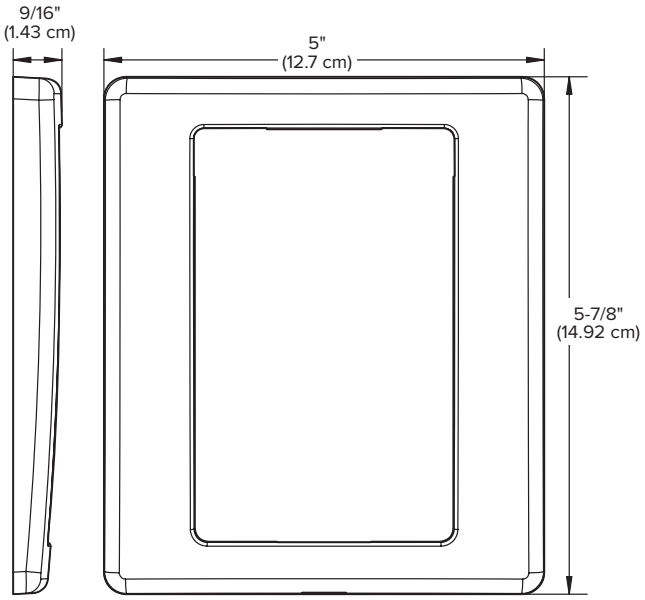

DIAGNOSTICS

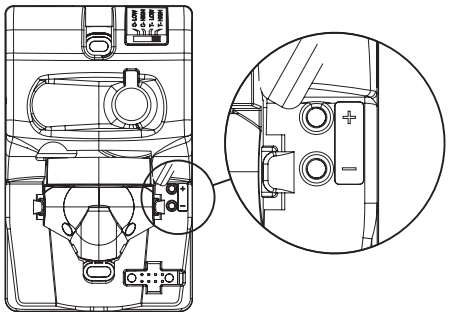

Test points indicated above are used to validate the Notification Appliance Circuit and verify device function.

FIELD CONFIGURATION

Temporal horn and horn-strobe models are factory set to sound in a three-pulse temporal pattern. By sliding the tone selector switch, units may be configured for constant horn output that can be coded at precise intervals by KIDDE control panels and control modules.

Note: Temporal 3 coding is the required output for fire notification devices per NFPA 72. Any device coding other than temporal 3 is at the discretion and approval of the local authority having jurisdiction (AHJ).

Horns and horn-strobes are factory set for high dB output. Low dB output may be selected by sliding the tone selector switch. This reduces the output by about 6 dBA.

Genesis LED clear strobes and horn-strobes may be set for 15, 30, or 75 candela output. The output setting is changed by simply removing the cover and sliding the candela switch to the desired setting. The device does not have to be removed from the wall to change the output setting. The setting remains visible through a small window on the left-hand side of the device after the cover is closed.

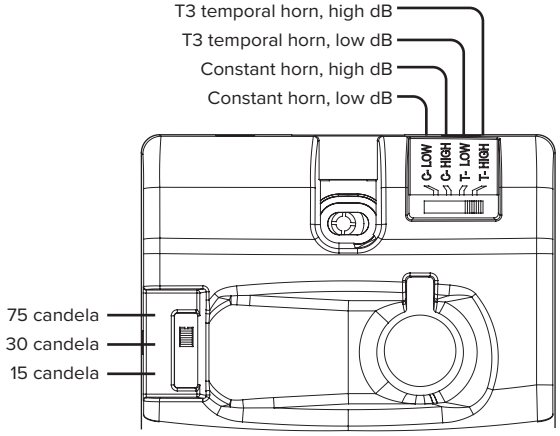

OPERATING CURRENT

Horns

Sound setting	16 to 33 VDC	16 to 33 VFWR
C-Low T-Low	13 mA	15 mA
C-High T-High	23 mA	29 mA

Strobes

Strobe setting	16 to 33 VDC	16 to 33 VFWR
15, 30, 75	24 mA	32 mA

Horn-Strobes

Strobe setting	Sound setting	16 to 33 VDC	16 to 33 VFWR
15, 30, 75	C-Low, T-Low	35 mA	43 mA
	C-High, T-High	45 mA	55 mA

SOUND OUTPUT

Sound setting	Reverberant (UL 464)	Anechoic (CAN/ULC S525)
C-Low T-Low	80 dBA	86 dBA
C-High T-High	85 dBA	92 dBA

Sound pattern (ULC)

Axis	Angle	Change in output
Horizontal	45° and 115°	-3 dBA
	5° and 130°	-6 dBA
Vertical	65° and 135°	-3 dBA
	45° and 140°	-6 dBA

LIGHT DISTRIBUTION

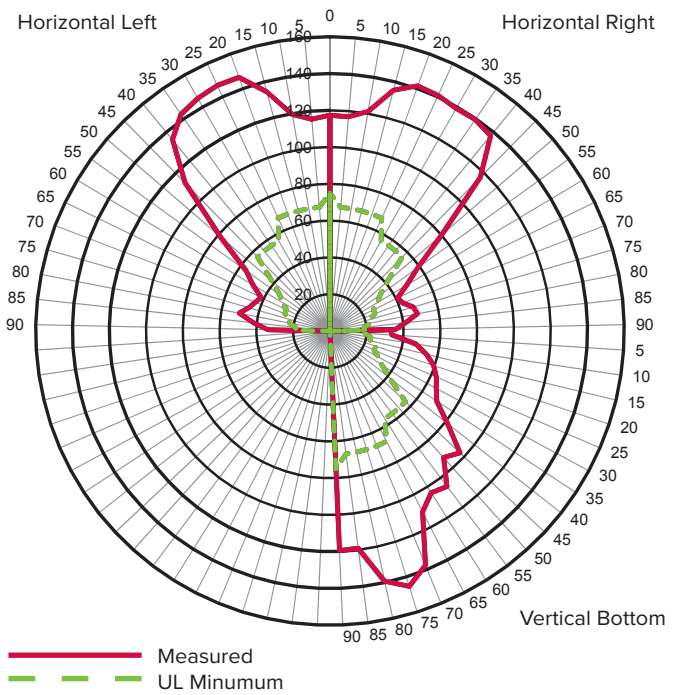

SPECIFICATIONS

Operating voltage	16 to 33 VDC, 16 to 33 VFWR
Horn signal type	Constant or T3 temporal
Light output	15, 30, or 75 candela
Strobe flash rate	1 fps (flash per second) approx.
Synchronization	20 Ω max. between any two devices. (To determine allowed wire resistance, refer to these specifications, and the specifications for the synchronized signal source.)
Synchronization sources	KIDDE CC Series Signal Modules, Booster and Auxiliary Power Supplies, and Intelligent and Conventional Control Panels
Wire size	12 to 18 AWG (0.75 to 2.50 mm^2)
Dimensions (W×H×D)	3 × 4-5/8 × 1-1/8 in. (7.62 × 11.75 x 2.86 cm)
Strobe-to-box center offset	-0.71 inches (-1.8 cm)
Compatible electrical boxes [1]	1-gang, 2-gang, 4-inch octagon, 4-inch square
Trim rings	EG1TR, EG1TW - Dimensions 5 x 5-7/8 x 9/16 in. (12.7 x 14.92 x 1.43 cm)
Agency Listings	FCC, ICC, UL1971, UL1638, UL464, CSFM (All models comply with ADA code of federal regulation Chapter 28 Part 36 final rule)
Operating environment Temperature Relative humidity	 32 to 122°F (0 to 50°C) 0 to 93% noncondensing

[1] Electrical boxes must be at least 1-1/2 in. (3.81 cm) deep. Electrical boxes greater than three inches wide require a trim ring.

ORDERING INFORMATION

Notification Appliances		Color	Marking
Horns Selectable High/low dB	EG1ARF	Red	FIRE
	EG1ARN	Red	None
	EG1AWF	White	FIRE
	EG1AWN	White	None
Strobes Selectable 15, 30, 75 cd	EG1VRF	Red	FIRE
	EG1VRN	Red	None
	EG1VWF	White	FIRE
	EG1VWN	White	None
Horn-strobes Selectable 15, 30, 75 cd, High/low dB	EG1AVRF	Red	FIRE
	EG1AVRN	Red	None
	EG1AVWF	White	FIRE
	EG1AVWN	White	None

Replacement Appliance Covers		Color	Marking
Horn Covers	EG1ARN-CVR	Red	None
	EG1AWA-CVR	White	ALERT
	EG1AWN-CVR	White	None
Strobe Covers	EG1VRN-CVR	Red	None
	EG1VWA-CVR	White	ALERT
	EG1VWN-CVR	White	None
Horn-Strobe Covers	EG1AVRN-CVR	Red	None
	EG1AVWA-CVR	White	ALERT
	EG1AVWN-CVR	White	None

Accessories

	EG1TR	Trim ring, EG1 Series, red		EG1TW	Trim ring, EG1 Series, white
	27193-11	One-gang surface mount box, red		27193-16	One-gang surface mount box, white

Model Number Syntax, Appliances

Genesis LED Series
EG1 = Wall mount appliances

Housing Color
R = Red
W = White

EG1AVRF

Housing Marking
N = None
F-FR = FEU
F-SP = FUEGO
F = FIRE
A = ALERT*

Functions
A = Horn only
V = Strobe only
AV = Horn-Strobe

**ALERT Marking available on white strobe model with clear lens only. See replacement covers for more options.*

Model Number Syntax, Replacement Covers

Genesis LED Series
EG1 = Wall mount appliances

Housing Color
R = Red
W = White

EG1AVRF-CVR

Cover Designation

Cover Marking
N = None
F-FR = FEU
F-SP = FUEGO
F = FIRE
A = ALERT

Functions
A = Horn only
V = Strobe only
AV = Horn-Strobe

FIRE ALARM SYSTEMS.
POWERED BY PARTNERSHIP.*

CONTACT US

Phone: 888.244.9979 (Option 4)
Email: kidde.fire@kgsolutions.com
Website: kidde-esfire.com

8985 Town Center Pkwy,
Bradenton, FL 34202

©2025 Walter Kidde Portable Equipment, LLC
All rights reserved.

*Kidde Commercial and its authorized resellers/distributors are separate and independent entities. This relationship between vendor and reseller/distributor does not constitute a legal partnership or create any shared liability between companies.