60 SERIES
HC60W35R2P-V
HC60W35R4P-V

5MP AI Indoor Dome Camera

5 YEAR WARRANTY

ONVIF | SGTM

Honeywell's new and improved 60 Series 5MP AI indoor dome cameras offer exceptional performance in variable and low light conditions with enhanced video/object analytics to highlight intricate details of persons and objects. These cameras include the latest FIPS 140-3 encryption standard as well as increased local storage (up to 1 TB) making them ideal for larger enterprise applications where cybersecurity and regulatory compliance is essential.

ENHANCED DETECTION AND IMAGING

- Upgraded WDR (up to 140 dB) to significantly reduce image glare
- Increased IR distance by 2X (up to 60 m (197 ft))
- P-Iris and improved minimum illumination (0.007 Lux@30 IRE) provides better image quality in variable or low light conditions
- Improved shutter speed (1/100000 ~ 1/5) allows faster capture of moving subjects, reducing motion blur and producing sharper images
- Enhanced 3D noise reduction eliminates visual noise resulting in crisper details for identifying objects or people in video footage
- Smart IR Technology automatically adjusts to changing light conditions and object distances for better capture of details even in dimly lit or nighttime scenes

INTELLIGENT SURVEILLANCE

- New and improved probabilistic AI video object analytics to quickly detect suspicious activities and identify attributes such as faces, vehicles, gender, age, colors of cars or personal attire for faster investigative search
- Visible bounding boxes with MAXPRO integration
- Supported in the Milestone plugin intelligent search

INCREASED OPERATIONAL EFFICIENCY

- System security enhancements with Secure Boot and latest FIPS 140-3 chipset provide secure data integrity and privacy
- Upgraded local storage (up to 1 TB) or 4X the amount of previous models significantly boosts camera data management and retention capacity
- ONVIF Profile M allows analytics metadata and events to be securely and seamlessly integrated within video surveillance systems for better operational decision making
- Built-in PoE eliminates need for separate power supply and associated wiring
- Remote configuration, motorized zoom adjustments and auto-focus can be performed from web client or NVR

COMPLIANCE

- NDAA compliant
- NIS2

POTENTIAL APPLICATIONS:

- Retail (Big Box Retail)
- Banking
- Gaming / Casinos
- Hospitality / Hotels
- Schools / Universities
- Pharma
- Datacenters
- Airport / Transportation Hubs
- Commercial / Large Office Buildings
- Hospitals / Healthcare Facilities
- Manufacturing/Warehouse
- Government / Military Facilities

Honeywell

60 SERIES 5MP AI INDOOR DOME CAMERA

OPERATIONAL

RAM	2 Gigabytes
Flash	16 Gigabytes
Video Standard	NTSC / PAL
Scanning System	Progressive
Image Sensor	Sony STARVIS 2 IMX675, 1/2.8" CMOS
Sensor size (H x V)	5.184 x 3.888 mm
Number Of Pixels (H x V)	5 MP (2592 x 1944)
Min. Illumination (Color/B/W)	**HC60W35R2P-V:** Color: 0.007 Lux@30IRE F1.4 B/W: 0Lux @F1.4(IR on) **HC60W35R4P-V:** Color: 0.007 Lux@30IRE F1.6 B/W: 0Lux @F1.6(IR on)
S/N Ratio	55 dB
Electronic Shutter Speed	1/5 ~ 1/100000 s
IR Distance	Up to 60 m (197 ft)
IR Light Control	Smart IR (Auto / Manual) / OFF
IR Light Number	4
Removable IR-Cut Filter	Yes
Day/Night	Auto / Day Mode / Night Mode / Timing
Backlight Compensation	WDR, HLC, BLC
White Balance	Auto / Tungsten / Fluorescent / Daylight / Shadow / Manual
Gain Control	0~100 %
Wide Dynamic Range	Up to 140 dB
Noise Reduction	2D / 3D DNR
Lens	**HC60W35R2P-V:** 2.7-13.5 mm, F1.4-F2.8, P-Iris **HC60W35R4P-V:** 7-22 mm, F1.6-F2.8, P-Iris
G-Sensor	Supported (hardware)
Electronic Image Stabilization	Supported
Angle Of View	**HC60W35R2P-V**: H: 100° ~ 30°, V: 72° ~ 23° **HC60W35R4P-V**: H: 39° ~ 16°, V: 29° ~ 12°
Privacy Masking	Off / On (4 Areas)
Defog	Supported
Encryption Chipset	Built-In FIPS 140-3 Encryption Chipset
Local Storage	Micro SD / SDHC / SDXC card slot (up to 1TB)
Micro USB	Support Wi-Fi Dongle for configuration
Alarm Inputs / Outputs	2 In / 1 Relay Out

VIDEO

Video Compression	H.265 HEVC / H.264 / MJPEG, Smart Codec	
Resolution	**PAL**	**NTSC**
	Stream 1 H.264/H.265: 2592 x 1944, 2688 x 1520, 2560 x 1440, 2304 x 1296, 1920 x 1080, 1280 x 720 @25 fps 2560 x 1440, 2304 x 1296, 1920 x 1080, 1280 x 720@50 fps MJPEG: 1920 x 1080, 1280 x 720 @12 fps **Stream 2** 2592 x 1944, 1920 x 1080, D1 (704 x 576), VGA (640 x 480), CIF (352 x 288)@25 fps 2560 x 1440, 2304 x 1296, 1920 x 1080, 1280 x 720, D1 (704 x 576), VGA (640 x 480), CIF (352 x 288)@50 fps MJPEG: 1920 x 1080, D1 (704 x 576), VGA (640 x 480), CIF (352 x 288) @12 fps **Stream 3** H.264/H.265: 2592 x 1944, VGA (640 x 480), CIF (352 x 288), QVGA (320 x 240) @25 fps 1920 x 1080, 1280 x 720, VGA (640 x 480), CIF (352 x 288), QVGA (320 x 240) @50 fps MJPEG: VGA (640 x 480), CIF (352 x 288), QVGA (320 x 240) @12 fps MJPEG: 1920 x 1080, 1280 x 720, VGA (640 x 480), CIF (352 x 288), QVGA (320 x 240) @12 fps	**Stream 1** H.264/H.265: 2592 x 1944, 2688 x 1520, 2560 x 1440, 2304 x 1296, 1920 x 1080, 1280 x 720 @30 fps 2560 x 1440, 2304 x 1296, 1920 x 1080, 1280 x 720@60 fps MJPEG: 1920 x 1080, 1280 x 720 @12 fps **Stream 2** 2592 x 1944, 1920 x 1080, D1 (704 x 480), VGA (640 x 480), CIF (352 x 240)@30 fps 2560 x 1440, 2304 x 1296, 1920 x 1080, 1280 x 720, D1 (704 x 480), VGA (640 x 480), CIF (352 x 240)@60 fps MJPEG: 1920 x 1080, D1 (704 x 480), VGA (640 x 480), CIF (352 x 240) @12 fps **Stream 3** H.264/H.265: 2592 x 1944, VGA (640 x 480), CIF (352 x 240), QVGA (320 x 240) @30 fps 1920 x 1080, 1280 x 720, VGA (640 x 480), CIF (352 x 240), QVGA (320 x 240) @60 fps MJPEG: VGA (640 x 480), CIF (352 x 240), QVGA (320 x 240) @12 fps MJPEG: 1920 x 1080, 1280 x 720, VGA (640 x 480), CIF (352 x 240), QVGA (320 x 240)@12 fps
Number of Video Streams	3	
Frame Rate	**Stream1:** MAX 25/30 fps 2592 x 1944, 2688 x 1520, 2560 x 1440, 2304 x 1296, 1920 x 1080, 1280 x 720 MAX 50/60 fps 2560 x 1440, 2304 x 1296, 1920 x 1080, 1280 x 720 **Stream2:** MAX 25 fps 2592 x 1944, 1920 x 1080, 704 x 576, 640 x 480, 352 x 288 MAX 30 fps 2592 x 1944, 1920 x 1080, 704 x 480, 640 x 480, 352 x 240 MAX 50 fps 2560 x 1440, 2304 x 1296, 1920 x 1080, 1280 x 720, 704 x 576, 640 x 480, 352 x 288 MAX 60 fps 2560 x 1440, 2304 x 1296, 1920 x 1080, 1280 x 720, 704 x 480, 640 x 480, 352 x 240 **Stream3:** MAX 25 fps 2592 x 1944,640 x 480, 352 x 288, 320 x 240 MAX 30 fps 2592 x 1944, 640 x 480, 352 x 240, 320 x 240 MAX 50 fps 1920 x 1080, 1280 x 720, 640 x 480, 352 x 288, 320 x 240 MAX 60 fps 1920 x 1080, 1280 x 720, 640 x 480, 352 x 240, 320 x 240	
Bit Rate	100kbps ~ 16000kbps	

AUDIO

Audio Compression	G.711a / G.711Mu / G.726
Audio Stream	Full duplex, Simplex
Audio Interface	Line In/Out, Built-in Microphone

Honeywell

60 SERIES 5MP AI INDOOR DOME CAMERA

NETWORK	
Ethernet	10 Base-T / 100 Base-TX Ethernet (RJ-45)
Supported Web Browsers	Microsoft Edge, Chrome
Supported OS	Microsoft Windows 10, Windows 11
Protocols*	IPv4, IPv6, TCP / IP, HTTP, HTTPS, RTSP / RTP / RTCP, IGMP / Multicast, SMTP, DHCP, NTP, DNS, QoS, SNMP, 802.1X, UDP, ICMP, ARP, TLS, FTP/ SFTP, DDNS
Interoperability	ONVIF Profile S, G, T, M
Maximum Users Access	10 Users
Security	User account and password protection, HTTPS, IP Filter, Digest authentication, TLS1.2&TLS1.3, Stream encryption, AES128 / 256, SSH / Telnet closed, PCI-DSS compliance, Built-In encryption chipset
Secure Boot	Supported
Languages Supported	Arabic, Czech, Dutch, English, French, German, Italian, Japanese, Korean, Polish, Portuguese (Brazil), Spanish, Turkish, Traditional Chinese

EVENTS / ANALYTICS	
Video Analytics	Motion Detection, Smart Motion, Scene Change, Intrusion, Multi Loitering, Face Detection, Line Crossing Detection, Unattended Object Detection, Missing Object Detection
Object Analytics	**Object Classes:** Humans, Vehicles
	Object Data: Vehicle: Car / Truck / Motorcycle / Bus Gender: Male / Female Face mask detection: with mask / without mask** Age: Young / Adult / Middle Age / Senior Colors of cars or personal clothing: Blue / Yellow / Black / White / Green/ Red / Gray / Purple / Pink / Brown /Teal / Colorful / Beige / Gold / Orange / Silvery / Floral
Audio Analytics	Audio Classes: Glass Break, Scream, Gunshot, Loud Sound
Event Type	Alarm Input, SD Card Alarm, Abnormal Sound Alarm, Illegal Access Alarm
Event Linkage	Event notification using digital output, FTP/SFTP, Email, Micro SD card recording and audio output
Region Of Interest	8

ELECTRICAL	
Power Supply	AC24V, 1A, 50-60 Hz; or DC12 V⎓2 A; or PoE 44-57 V⎓, 350 mA (IEEE 802.3af)
Power Consumption	Max. 10.5 W

* Some development may be required in specific user cases to support some of these protocols in the field as they mature over time.
** Face mask detection is a beta feature.

MECHANICAL	
Dimensions (Ø x H)	Ø 126 x 124 mm (Ø 4.96" x 4.88")
Dome Diameter	Ø 96.4 mm (3.80")
Package Dimensions (D x D x H)	195 x 195 x 185 mm (7.68" x 7.68" x 7.28")
Product Weight	0.47 kg (1.04 lb)
Package Weight	0.77 kg (1.7 lb)
Body Material	Plastic and Metal (die casting aluminum with liquid painting)
Construction Color	White

ENVIRONMENTAL	
Operating Temperature	Starting Temperature: 0 °C ~ 60 °C (32°F ~ 140 °F) Working Temperature: -10°C ~ 60°C (14°F ~ 140°F)
Relative Humidity	Less than 95 %, non-condensing
Ingress Protection	IP52
Impact Resistance	IK10

REGULATORY	
Emissions	FCC PART 15, ICES, CE (EN 55032), Complies with UKCA and RCM
Immunity	CE(EN 50130-4, EN55035), Complies with UKCA and RCM
Safety	UL LISTED TO UL/CSA 62368-1, CE(EN 62368-1), Complies with UKCA and RCM
RoHS	CE(EN 63000), UAE(Cabinet Decree No.10 of 2017)
Country of Origin	Vietnam
Warranty	5 years

DORI (EN62676-4 STANDARD)		
	Wide	**Tele**
Detect	**HC60W35R2P-V:** 62 m (203.41ft) **HC60W35R4P-V:** 143 m (469.16 ft)	**HC60W35R2P-V:** 215 m (705.38 ft) **HC60W35R4P-V:** 350 m (1148.29 ft)
Observe	**HC60W35R2P-V:** 24.8 m (81.36 ft) **HC60W35R4P-V:** 57.2 m (187.66 ft)	**HC60W35R2P-V:** 86 m (282.15 ft) **HC60W35R4P-V:** 140 m (459.32 ft)
Recognize	**HC60W35R2P-V:** 14.2 m (46.59 ft) **HC60W35R4P-V:** 28.6 m (93.83 ft)	**HC60W35R2P-V:** 43 m (141.08 ft) **HC60W35R4P-V:** 70 m (229.66 ft)
Identify	**HC60W35R2P-V:** 6.2 m (20.34 ft) **HC60W35R4P-V:** 14.3 m (46.92 ft)	**HC60W35R2P-V:** 21.5 m (70.54 ft) **HC60W35R4P-V:** 35 m (114.83 ft)

DIMENSIONS

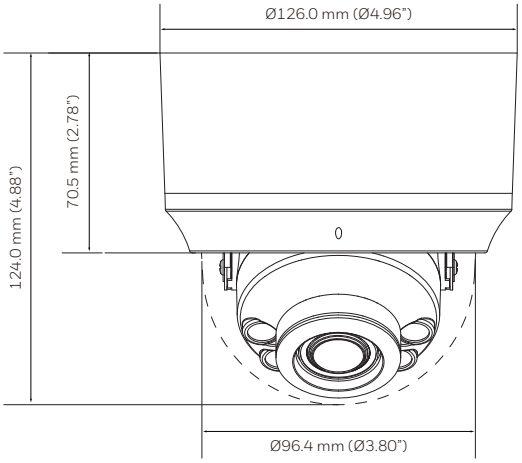

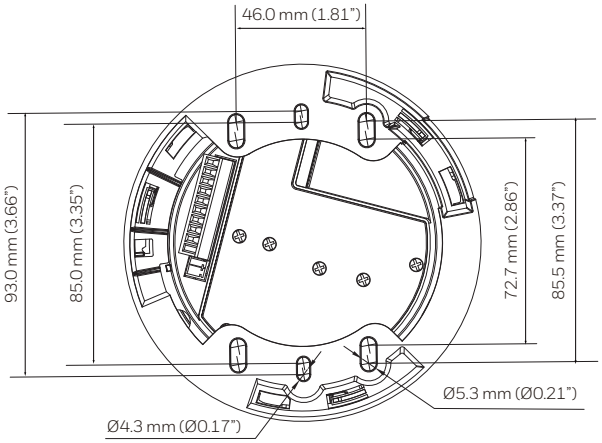

Honeywell

60 SERIES 5MP AI INDOOR DOME CAMERA

SYSTEM COMPATIBILITY & RECOMMENDED ACCESSORIES

SYSTEM COMPATIBILITY	
MAXPRO NVR	Supported with MAXPRO R795
ADPRO NVR iFT-E*	Up to 32 IP channels with up to 32 VA channels NVRs
ADPRO NVR iFT*	Up to 32 IP channels or 16 IP channels with up to 16 VA channels NVRs
ADPRO NVR eFT-S*	Up to 16 IP channels or 8 IP channels with up to 8 VA channels NVRs
Honeywell DVM*	Supported with Honeywell DVM R800
35 Series NVR	4/8/16/32/64-channel 35 series NVRs
Third Party Systems	Supported with Milestone 2025 R1

*Limited features are supported for compatibility. Please refer to the Integration Matrix for detailed information.

OPTIONAL MOUNTS AND ACCESSORIES**	
HA60WLM3	60S wall mount bracket for 3 inch dome, white
HA60WIF	60S Wi-Fi dongle and USB adapter for camera configuration
HA60CB3I	60S indoor dome camera bubble replacment (clear) - for HC60W35R2P-V and HC60W35R4P-V
HA60SB3I	60S indoor dome camera bubble replacement (smoke) - for HC60W35R2P-V and HC60W35R4P-V
HA60ICK	60S indoor dome in-ceiling mount kit

** Mounting accessories, unless otherwise noted, are not included with camera and must be ordered separately. Please refer to the cross reference matrix or accessories datasheet for detailed information.
HA60ICK is included in camera package.

ORDERING

PART NUMBER	DESCRIPTION
HC60W35R2P-V	60 Series 5MP AI Indoor Dome Camera, WDR up to 140 dB, 1/2.8" CMOS, 2.7-13.5 mm MFZ, PoE
HC60W35R4P-V	60 Series 5MP AI Indoor Dome Camera, WDR up to 140 dB, 1/2.8" CMOS, 7-22 mm MFZ, PoE

For more information
buildings.honeywell.com/security

Honeywell Commercial Security
715 Peachtree St. NE
Atlanta, GA 30308
1.800.323.4576
www.honeywell.com

HEVC Advance™

ONVIF and the ONVIF logo are trademarks of ONVIF Inc.
HEVC Advance logo is a trademark of HEVC Advance.
Sony and Sony STARVIS are registered
trademarks of Sony Corporation.

Honeywell reserves the right, without notification, to
make changes in product design or specifications.

HBA-SEC-60S-HC60W35RxP-V-DS-US-EN-09-2025-V01-Y
© 2025 Honeywell International Inc.

Honeywell