60 SERIES CAMERAS
MOUNTS AND ACCESSORIES

Honeywell's 60 Series mounts and accessories provide a wide range of installation options for the Honeywell 60 Series IP cameras, including junction box, in ceiling mount bracket, wall mount bracket, pole mount bracket, corner mount bracket, etc.

The mounts provide easy cable routing with no exposed wiring, and the cameras can be installed, adjusted, and tested without repositioning the housing. All of the mounts and accessories are suitable for indoor or outdoor use.

The junction box, pendant mount bracket, wall mount bracket, pendant mount cap and pendant mount adapter are constructed of die-casting aluminum. The in ceiling mount bracket is made of SECC steel. The pole mount bracket, corner mount bracket is made of SPCC steel.

MARKET OPPORTUNITIES

Honeywell's 60 Series mounts and accessories provide excellent value at an attractive price, featuring simple, clean lines, and rugged construction for a wide range of mounting options.

HA60BB1
Junction Box

HA60JCBH2*
Dome Junction Box

HA35PLM01
Pole Mount Bracket

HA35CNM01
Corner Mount Adapter

HA60WLMB1
Wall Mount Bracket

HA60WLM4F
Wall Mount Bracket

HA60WLM3
Wall Mount Bracket

HA60PMC4FI
Pendant Mount Adapter

HA60PMC4FO
Pendant Mount Adapter

HA35PCM04B
Camera Cap

HA35CLM01
Pendant Mount

HA35CLM02
Pendent Extension Mount

HA60WIF
Wifi Dongle

HA60CB3I
Indoor Bubble Clear

HA60CB4I
Outdoor Bubble Clear

HA60SB3I
Indoor Bubble Smoke

HA60SB4I
Outdoor Bubble Smoke

HA60ICK
Indoor Dome Inceiling Mount Kit

HA60APR
Outdoor Dome Adapter Plate and Rubber

HA60WLMZI
Wall Mount Bracket

HA60WLMZL
Wall Mount Bracket

HA60PLMZI
Pole Mount Bracket

HA60CNMZI
Corner Mount Bracket

HA60CLM01
Pendent Mount

HA60CLM02
Pendent Extension Mount

HA35JCBHBB
Bullet Junction Box

HAS1PTD
PT Driver

HAS1PTDP
PT Driver Pendant Mount

HA60JCBPT
PT Driver Junction Box

HA60ICMM
In-Ceiling Mount Bracket

HA30PMB01
Pendant Mounting Base

HA30PME02
Pendant Mount Extend Bracket

HA60PCMZ
Pendant Mount Cap

HA60MLMM
Multi-Sensor Camera Wall Mount Bracket

HA60PLMM
Multi-Sensor Pole Mount Bracket

HA60CNMM
Multi-Sensor Corner Mount Bracket

* HA60JCBH2 - coming in 2026

Honeywell

MOUNTS AND ACCESSORIES

COMPATIBLE 60 SERIES CAMERAS

MODEL	HC60W34R2I HC60W32R2I	HC60W44R2I HC60W42R2I	HC60WB4R2I HC60WB2R2I HC60WB4R5I	HC60WZ4R40WI HC60WZ4R40KI HC60WZ8R40WI HC60WZ8R40KI	HC60W35R2P-V HC60W35R4P-V	HC60W45R2P-V	HC60WFCR1-V	HC60WB5R2P-V HC60WB5R5P-V
HA60BB1								
HA60JCBH2								
HA60WLMZI								
HA60WLMZL								
HA35PLM01		+HA60JCBH2 or +HA60WLM4F or +HA60WLMB1 +HA60PMC4FO	+HA60BB1			+HA60JCBH2 or +HA60WLM4F or +HA60WLMB1 +HA60PMC4FO	+HA60JCBH2	+HA60BB1
HA35CNM01		+HA60JCBH2 or +HA60WLM4F or +HA60WLMB1 +HA60PMC4FO	+HA60BB1			+HA60JCBH2 or +HA60WLM4F or +HA60WLMB1 +HA60PMC4FO	+HA60JCBH2	+HA60BB1
HA60PLMZI				+HA60WLMZI or +HA60WLMZL				
HA60CNMZI				+HA60WLMZI or +HA60WLMZL				
HA60WLMB1		+HA60PMC4FO				+HA60PMC4FO		
HA60WLM3								
HA60WLM4F								
HA60PMC4FI		+Pendant mount bracket (bracket and installation not included)				+Pendant mount bracket (bracket and installation not included)	+Pendant mount bracket (bracket and installation not included)	

MOUNTS AND ACCESSORIES

COMPATIBLE 60 SERIES CAMERAS

MODEL	HC60W34R2I HC60W32R2I	HC60W44R2I HC60W42R2I	HC60WB4R2I HC60WB2R2I HC60WB4R5I	HC60WZ4R40WI HC60WZ4R40KI HC60WZ8R40WI HC60WZ8R40KI	HC60W35R2P-V HC60W35R4P-V	HC60W45R2P-V	HC60WFCR1-V	HC60WB5R2P-V HC60WB5R5P-V
HA60PMC4FO		+Pendant mount bracket (bracket and installation not included) +HA35CLM01 or +HA35CLM01 +HA35CLM02				+Pendant mount bracket (bracket and installation not included) +HA35CLM01 or +HA35CLM01 +HA35CLM02	+Pendant mount bracket (bracket and installation not included) +HA35CLM01 or +HA35CLM01 +HA35CLM02	
HA35PCM04B			+HA35CLM01 or +HA35CLM01 +HA35CLM02					+HA35CLM01 or +HA35CLM01 +HA35CLM02
HA60CB3I					✓			
HA60CB4I						✓		
HA60SB3I					✓			
HA60SB4I						✓		
HA60ICK					Included in camera package			
HA60APR						Included in camera package	Included in camera package	
HA60WIF					✓	✓		✓
HA60CLM01				+HA60CLM02				
HA60CLM02				+HA60CLM01				
HA35CLM01		+HA60PMC4FO	+HA35PCM04B			+HA60PMC4FO	+HA60PMC4FO	+HA35PCM04B
HA35CLM02		+HA35CLM01 HA60PMC4FO	+HA35CLM01 HA35PCM04B			+HA35CLM01 HA60PMC4FO	+HA35CLM01 HA60PMC4FO	+HA35CLM01 HA35PCM04B

MOUNTS AND ACCESSORIES

COMPATIBLE 60 SERIES CAMERAS

MODEL	HC60WM20R1
HA60ICMM	
HA30PMB01	+HA30PME02 +HA60PCMZ
HA30PME02	+HA30PMB01 +HA60PCMZ
HA60PCMZ	+HA30PMB01 +HA30PME02
HA60MLMM	
HA60PLMM	+HA60MLMM
HA60CNMM	+HA60MLMM

MOUNTS AND ACCESSORIES

COMPATIBLE 60 SERIES CAMERAS

MODEL	HC60TB4R1VT09 HC60TB4R4VT15 HC60TB4R2VT25 HC60TB4R2VT35 HC60TB4R2VT50
HA35JCBHBB	
HA35CNM01	+HA35JCBHBB
HA35PLM01	+HA35JCBHBB
HA35PCM04B	+HA35JCBHBB
HA35CLM01	+HA35PCM04B +HA35JCBHBB
HA35CLM02	+HA35PCM04B +HA35CLM01 +HA35JCBHBB
HAS1PTD	
HAS1PTDP	
HA60JCBPT	✓

MOUNTS AND ACCESSORIES

SPECIFICATIONS

MODEL	INDOOR/ OUTDOOR	CONSTRUCTION	COLOR	WEIGHT	DIMENSIONS
HA60BB1	Indoor/outdoor	ADC12	RAL 7022 (Dark Gray)	0.4 kg (0.8 lb)	Ø 105.0mm x 56.0 mm (Ø 4.13" x 2.2")
HA60JCBH2	Indoor/outdoor	ADC12	RAL 9003 (Signal White)	0.55 kg (1.21 lb)	Ø 159.0mm x 51.6 mm (Ø 6.26" x 2.03")
HA60PLMZI	Indoor/outdoor	SPCC	RAL 9003 (Signal White)	3.2 kg(7.05 lb)	200 mm x 67. 2 mm x 320 mm (7.87" x 2.65" x 12.6")
HA60CNMZI	Indoor/outdoor	SPCC	RAL 9003 (Signal White)	1.56 kg (3.44 lb)	247.6 mm x 180 mm x 143.5 mm (9.75" x 7.09" x 5.65")
HA60WLMZI	Indoor/outdoor	ADC12	RAL 9003 (Signal White)	0.59 kg (1.3 lb)	109 mm x 164 mm x 209.3 mm (4.29" x 6.46" x 8.24")
HA60WLMZL	Indoor/outdoor	ADC12	RAL 9003 (Signal White)	0.99 kg (2.18 lb)	109 mm x 164 mm x 279.3 mm (4.29" x 6.46" x 11.0")
HA60WLM3	Indoor	Plastic	RAL 9003 (Signal White)	0.08 kg (0.2 lb)	Ø 121.1 mm x 153.3 mm x 97.0 mm (Ø 4.77" x 6.04 x 3.82")
HA60WLM4F	Indoor/outdoor	ADC12	RAL 9003 (Signal White)	1.28 kg (2.82 lb)	Ø 166.2mmx139.3mmx278.7mm (6.54"x5.48"x10.97")
HA60PMC4FI	Indoor/outdoor	ADC12	RAL 9003 (Signal White)	0.76 kg (1.68 lb)	Ø166.2 mm x 72 mm (Ø6.54" x 2.83")
HA60PMC4FO	Indoor/outdoor	ADC12	RAL 9003 (Signal White)	0.75 kg (1.65 lb)	Ø166.2 mm x 72 mm (Ø6.54" x 2.83")
HA60ICK	Indoor	Plastic	White	0.08 kg (0.176 lb)	Ø 161 mm x 64.2 mm (Ø 6.34" x 2.53")
HA60APR	Indoor/outdoor	Aluminium / rubber	RAL 9003 (Signal White)	0.271 kg (0.6 lb)	Ø 158.0mmx3.5mm(Ø 6.22"x0.14")
HA60CLM01	Indoor/outdoor	Aluminum (ADC12)	RAL 9003 (Signal White)	0.24 kg (0.53 lb)	Ø 121 mm x 38 mm (Ø 4.77" x 1.50")
HA60CLM02	Indoor/outdoor	Aluminium	RAL 9003 (Signal White)	0.86 kg (1.90 lb)	Ø 56 mm x 352 mm (Ø 2.20" x 13.86")
HA60ICMM	Indoor/outdoor	Aluminum	Silver	1.13 kg (2.49 lb)	660.00 mm x 20.00 mm x 40.00 mm (25.98" x 0.79" x 1.57")
HA30PMB01	Indoor/outdoor	Aluminum	RAL 9003 (Signal White)	1.63 lb (0.74 k g)	Ø 160 mm x 90 mm (Ø 6.3" x 3.54")
HA30PME02	Indoor/outdoor	Aluminum	RAL 9003 (Signal White)	1.98 lb (0.9 kg)	Ø 50.8 mm x 400 mm (Ø 2" x 15.75")
HA60PCMZ	Indoor/outdoor	Aluminum	RAL 9003 (Signal White)	1.0 lb (0.5 kg)	Ø 154.2 mm x 71.7 mm (Ø 6.1" x 2.8")
HA60MLMM	Indoor/outdoor	Aluminum	RAL 9003 (Signal White)	1.40 kg (3.08 lb)	276.00 mm x 202.00 mm x 140.00 mm (10.86" x 7.95" x 5.51")
HA60PLMM	Indoor/outdoor	SPCC steel	White	1.24 kg (2.73 lb)	240.0 mm x 156.7 mm x 68.9 mm (9.45" x 6.16" x 2.71")
HA60CNMM	Indoor/outdoor	SPCC steel	White	4.00 kg (8.81 lb)	233.40 mm x 341.60 mm x 240.00 mm(9.19" x 13.45" x 9.45")
HA35JCBHBB	Indoor/outdoor	ADC12	RAL 9003 (Signal White)	0.17 kg (0.37 lb)	Ø120.5 mm x 37 mm (Ø4.74" x 1.46")
HA35CNM01	Indoor/outdoor	Aluminum	RAL 9003 (Signal White)	0.5 kg (1.1 lb)	170.0 mm x 176.5 mm x 103.3 mm (6.69" x 6.95" x 4.07")
HA35PLM01	Indoor/outdoor	Aluminum+SUS304	RAL 9003 (Signal White)	0.31 kg (0.68 lb)	170.0 mm x 130. 2 mm x 46 mm (6.69" x 5.13" x 1.81")
HA35PCM04B	Indoor/outdoor	ADC12	RAL 9003 (Signal White)	0.52 kg (1.15 lb)	133.6 mm x 76.7 mm (Ø5.26" x 3.02")
HA60WLMB1	Indoor/outdoor	ADC12	RAL 9003 (Signal White)	0.4 kg (0.90 lb)	222.7mm x 118.0 mmx 118.0 mm (8.77" x 4.65" x 4.65")
HA35CLM01	Indoor/outdoor	ADC12	RAL 9003 (Signal White)	0.3 kg (0.70 lb)	Ø140.0 mm x 52.2 mm (Ø5.51" x 2.06")
HA35CLM02	Indoor/outdoor	Aluminum	RAL 9003 (Signal White)	0.3 kg (0.70 lb)	Ø38.0 mm x 252.0 mm (Ø1.50" x 9.92")
HAS1PTD	Indoor/outdoor	ADC12	RAL 9003 (Signal White)	11.2 kg (24.7 lb)	210.4 mm × 210 mm × 498.8 mm (8.28"×8.27"×19.64")
HAS1PTDP	Indoor/Outdoor	ADC12	RAL 9003 (Signal White)	11.2 kg (24.7 lb)	498.8 mm x 210.4 mm x 210 mm (19.64" x 8.28" x 8.27")
HA60JCBPT	Indoor/Outdoor	SECC	RAL 9003 (Signal White)	10.3 kg (22.71 lb)	400.0 mm x 205.0 mm x 501.0 mm(15.75" x 8.07" x 19.72")
HA60CB3I	Indoor	PC	Clear	0.048 kg (0.106 lb)	Ø102.9 mm x 58.4 mm (Ø4.05" x 2.30")
HA60CB4I	Indoor/Outdoor	PC	Clear	0.048 kg (0.106 lb)	Ø102.9mm x 58.4 mm (Ø4.05" x 2.30")
HA60SB3I	Indoor	PC	Smoke	0.048 kg (0.106 lb)	Ø102.9mm x 58.4 mm (Ø4.05" x 2.30")
HA60SB4I	Indoor/Outdoor	PC	Smoke	0.048 kg (0.106 lb)	Ø102.9mm x 58.4 mm (Ø4.05" x 2.30")

MOUNTS AND ACCESSORIES

DIMENSIONS

HA60BB1

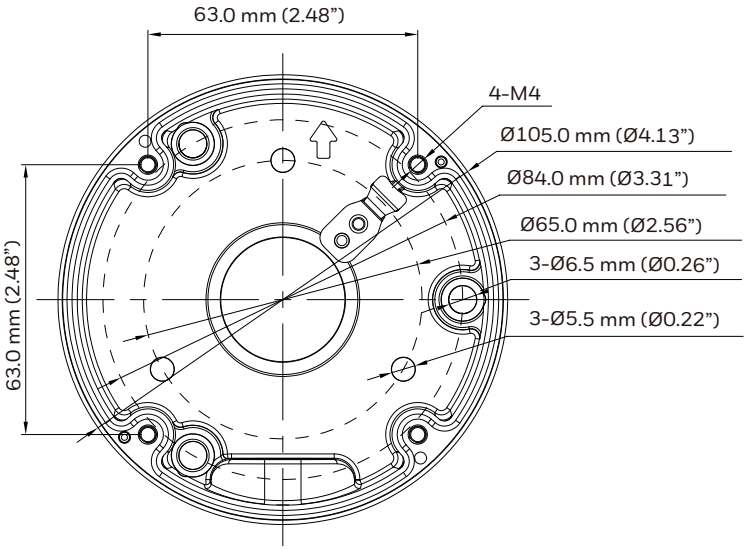

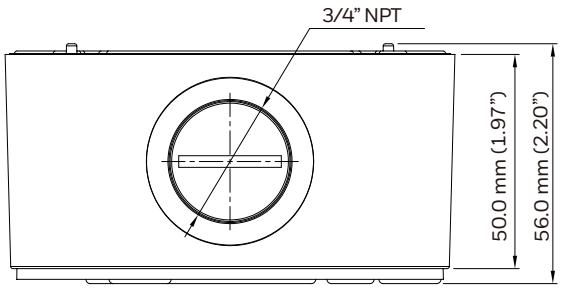

HA60JCBH2

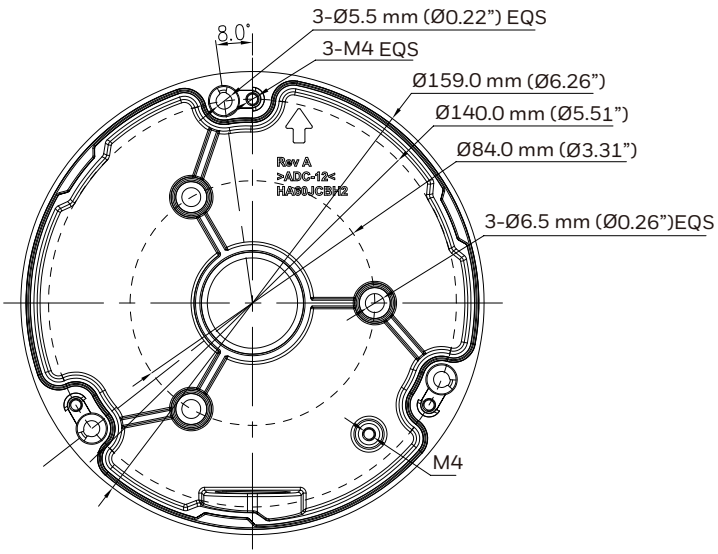

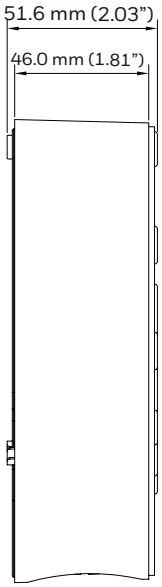

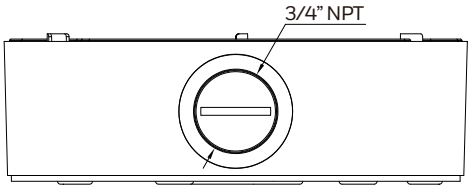

MOUNTS AND ACCESSORIES

DIMENSIONS

HA60WLM3

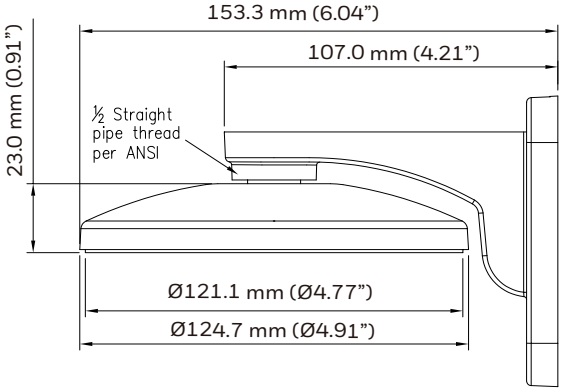

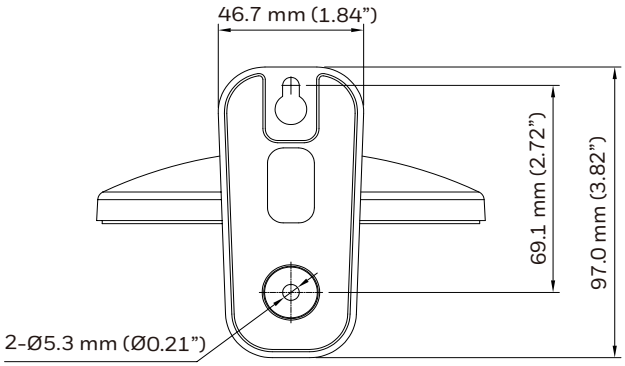

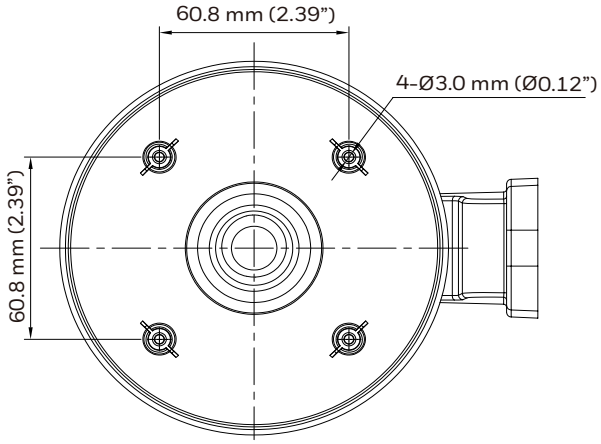

HA60PLMZI

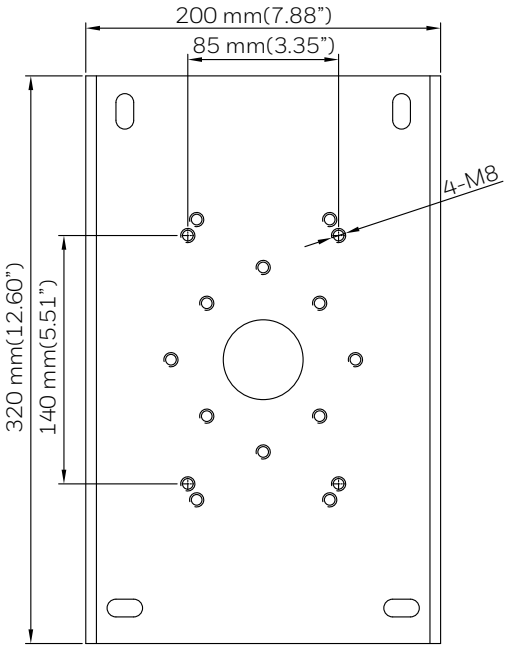

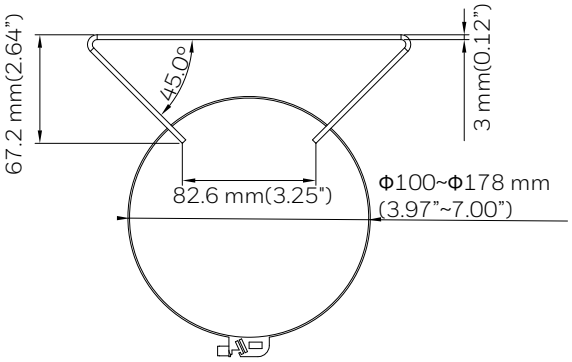

MOUNTS AND ACCESSORIES
DIMENSIONS

HA60CNMZI

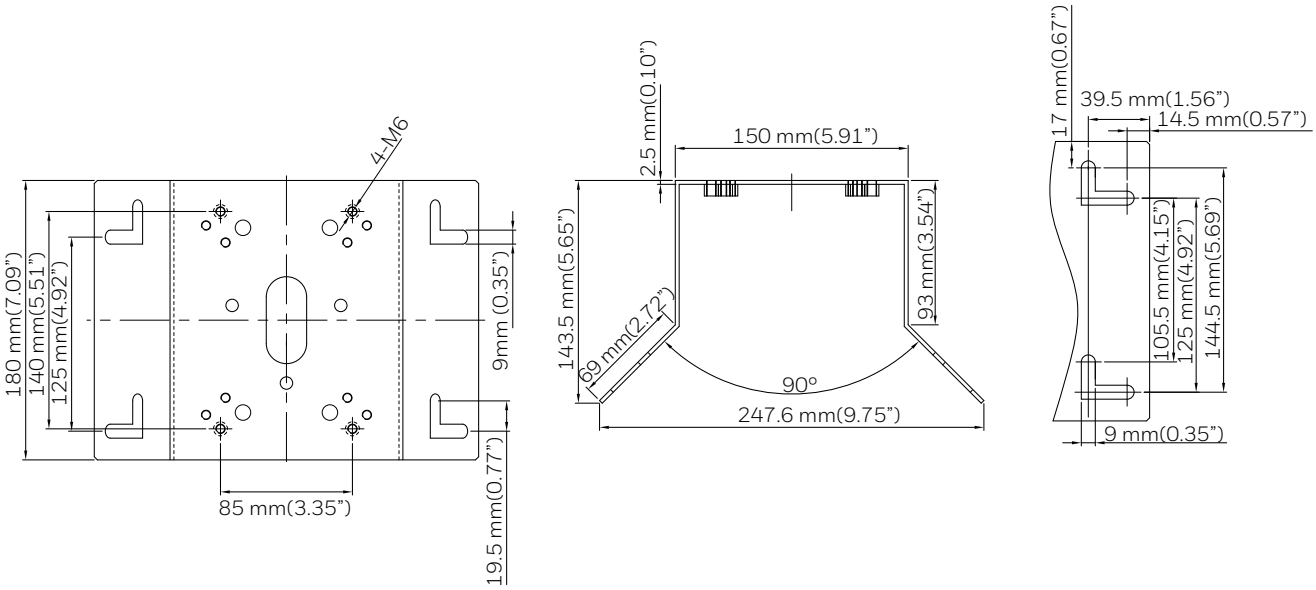

HA60WLMZI

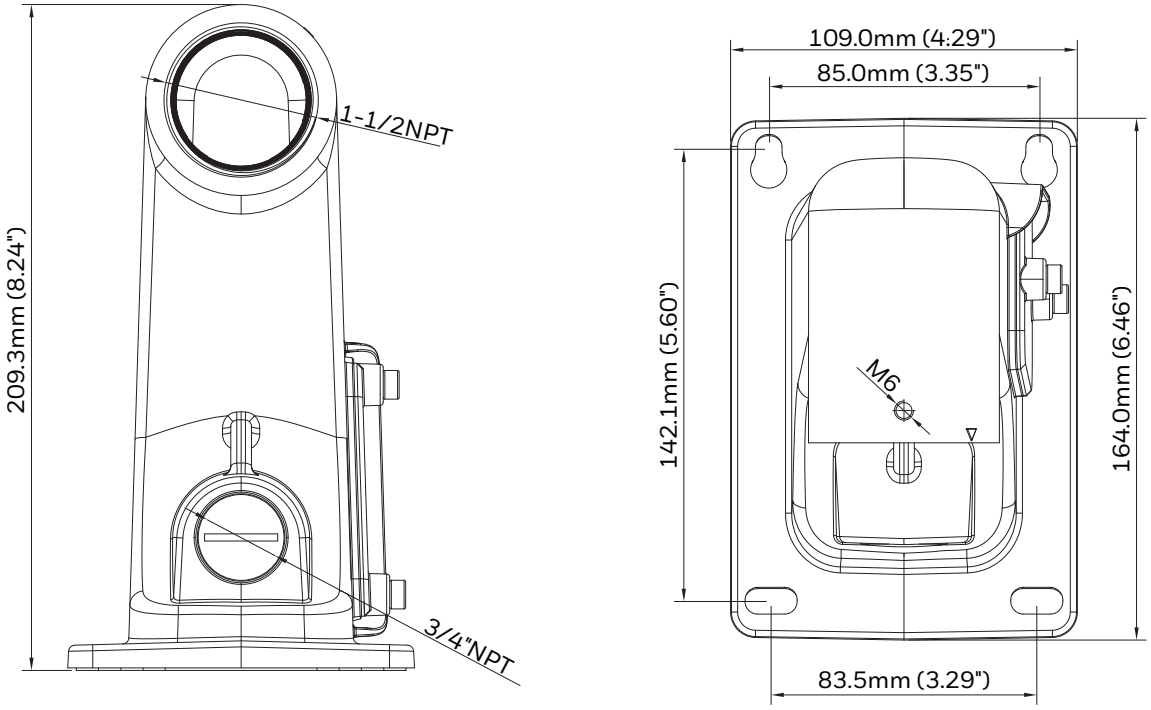

MOUNTS AND ACCESSORIES
DIMENSIONS

HA60WLMZL

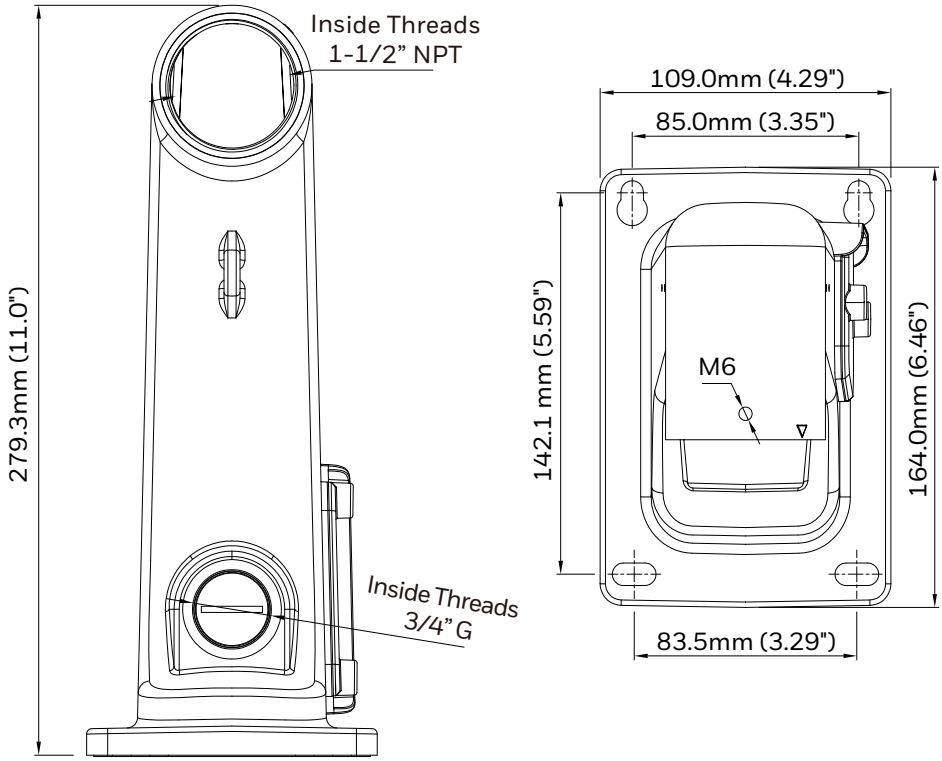

HA60WLM4F

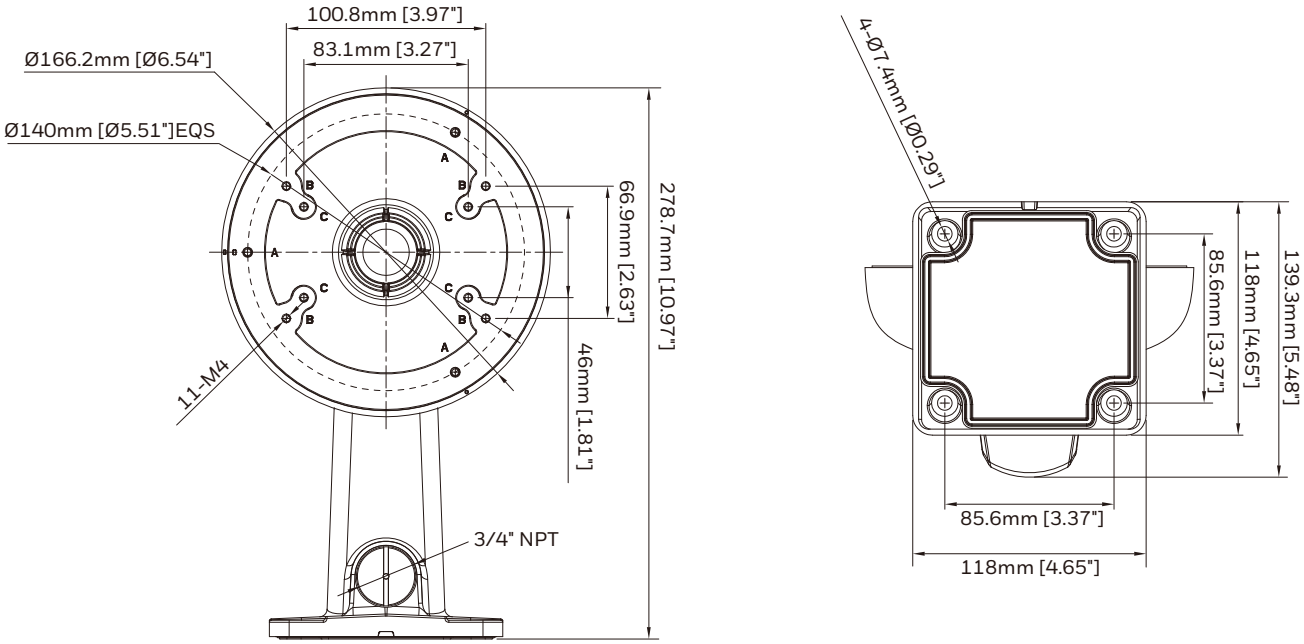

MOUNTS AND ACCESSORIES

DIMENSIONS

HA60PMC4FI

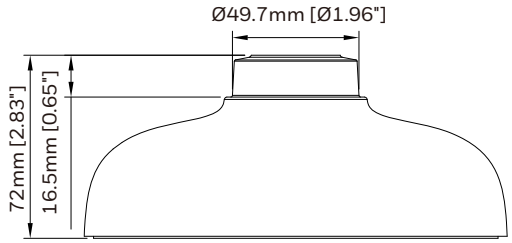

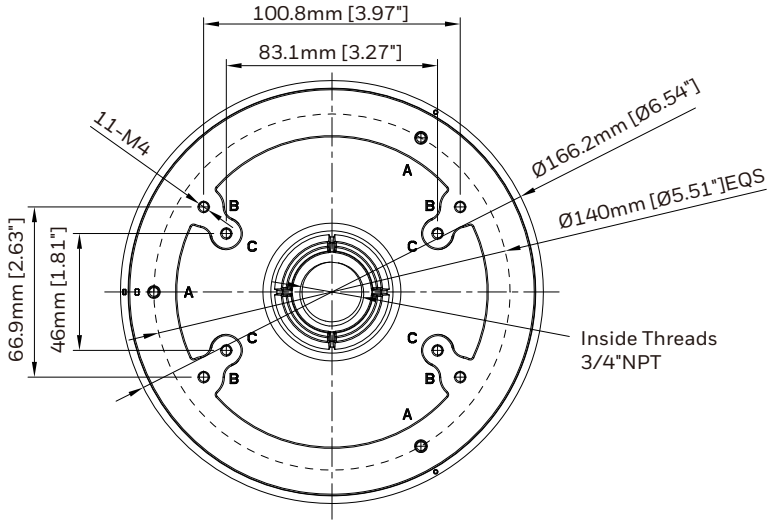

HA60PMC4FO

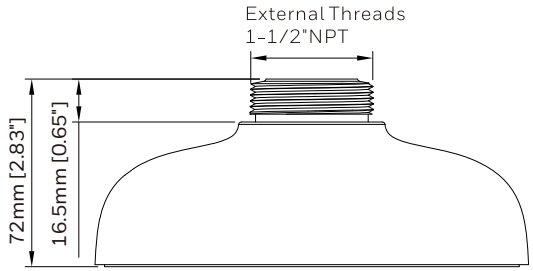

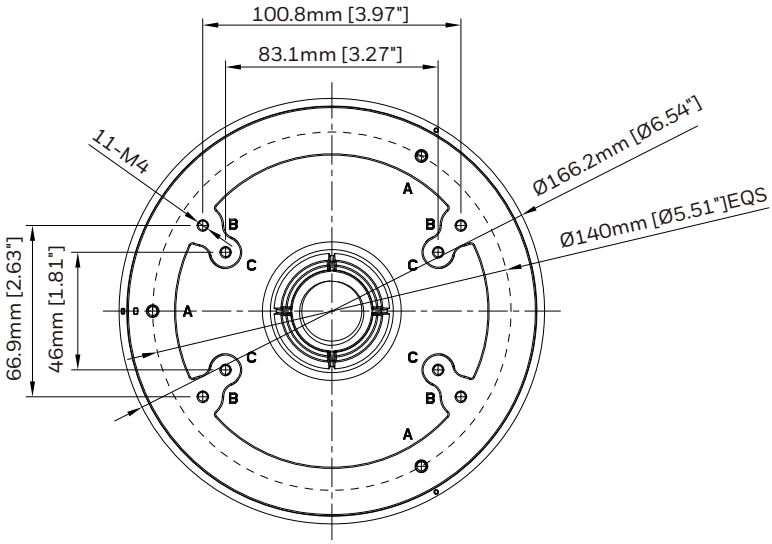

MOUNTS AND ACCESSORIES

DIMENSIONS

HA60CLM01

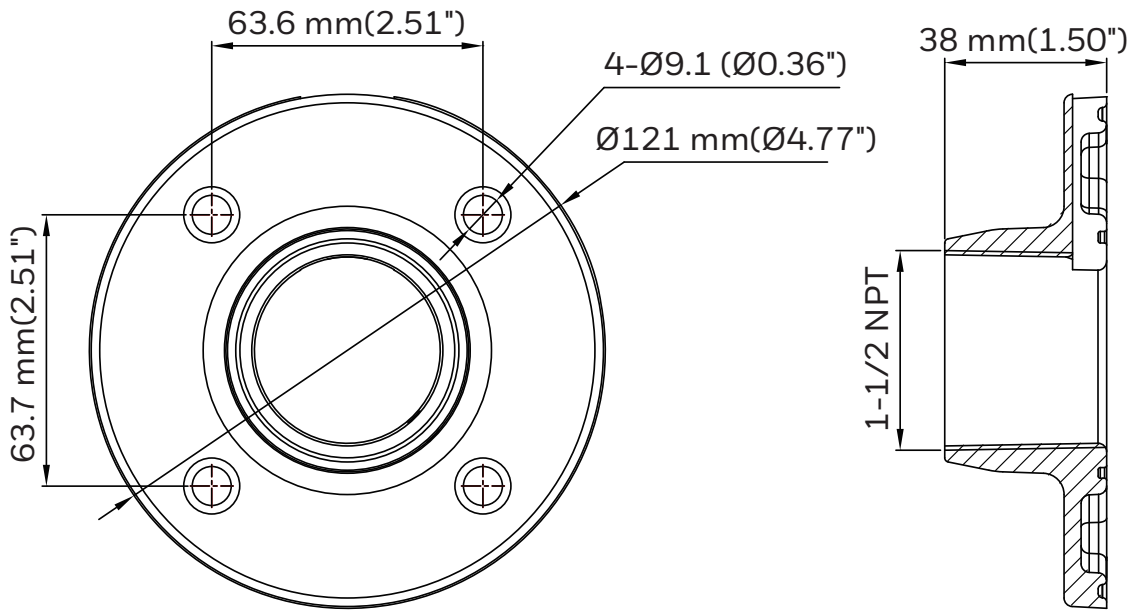

HA60CLM02

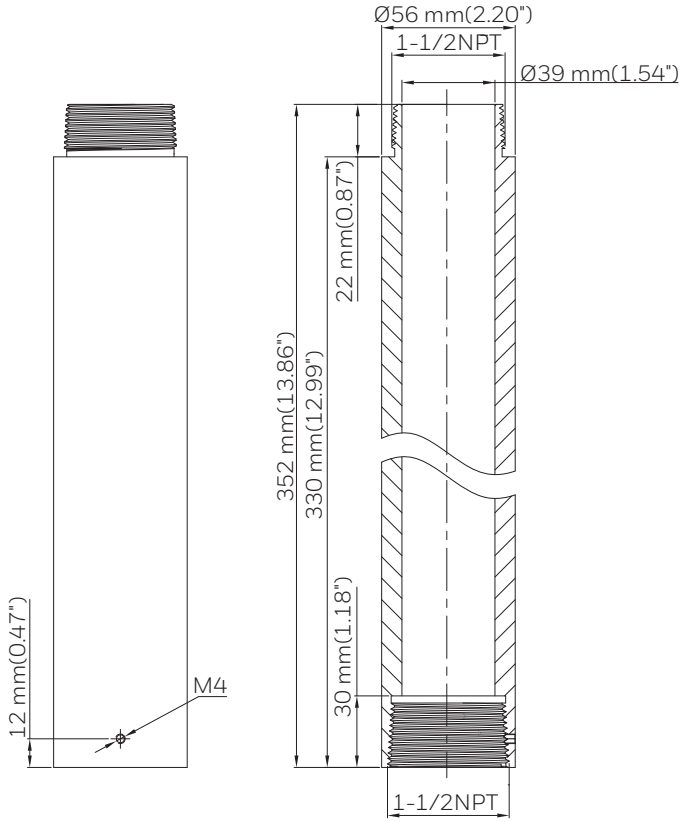

MOUNTS AND ACCESSORIES

DIMENSIONS

HA60ICMM

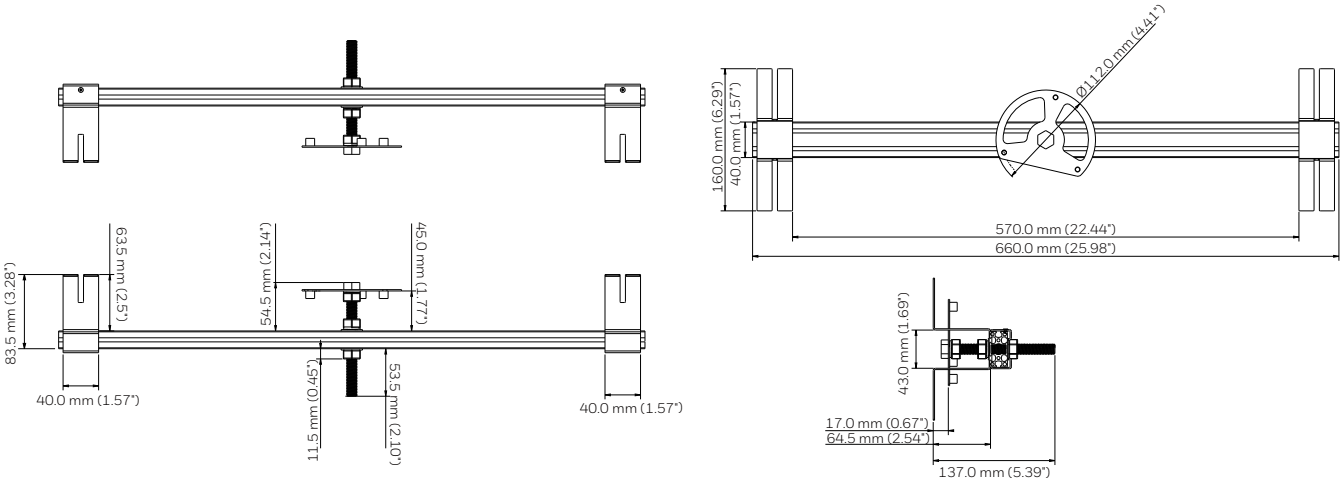

HA30PMB01

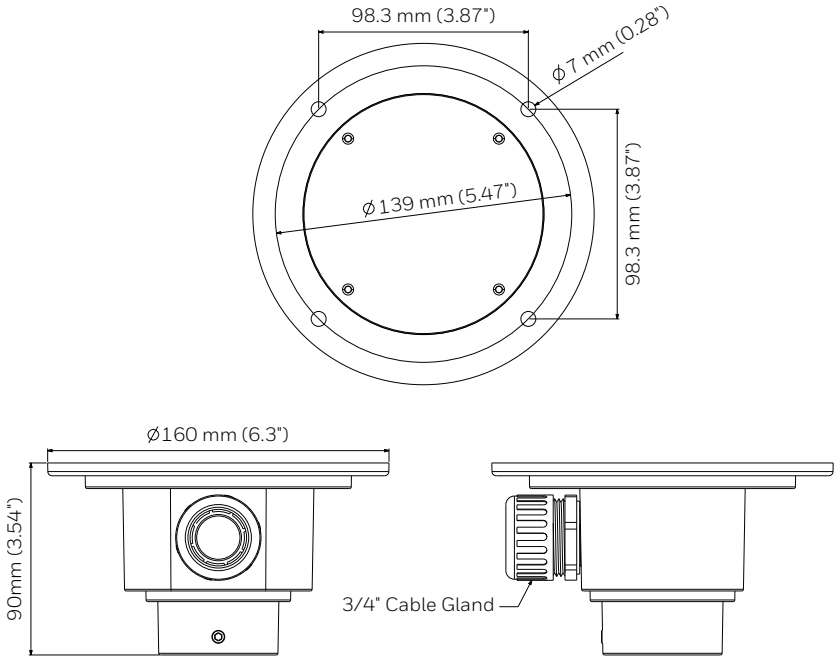

HA30PME02

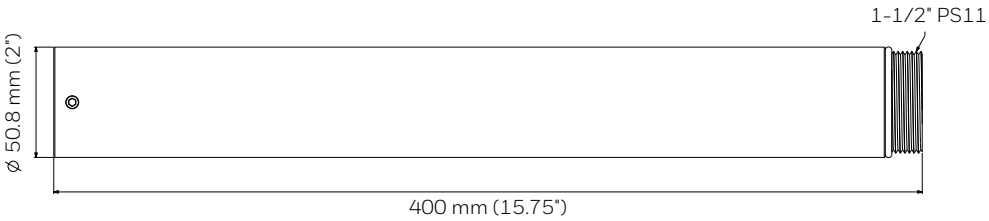

MOUNTS AND ACCESSORIES

DIMENSIONS

HA60PCMZ

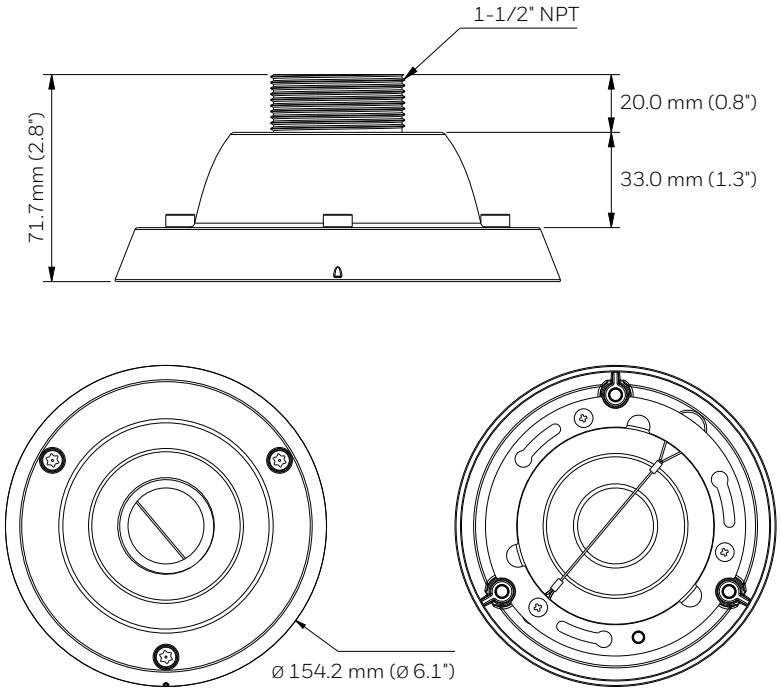

HA60MLMM

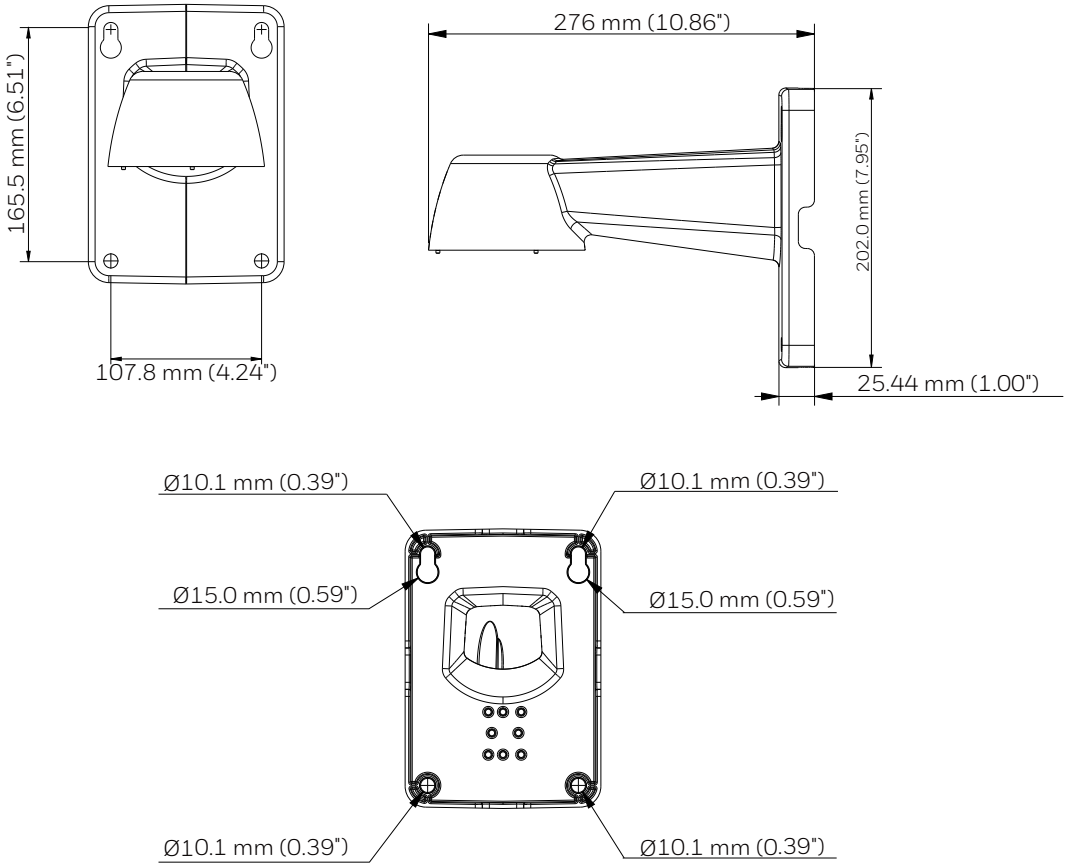

MOUNTS AND ACCESSORIES

DIMENSIONS

HA60PLMM

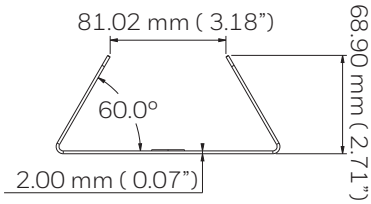

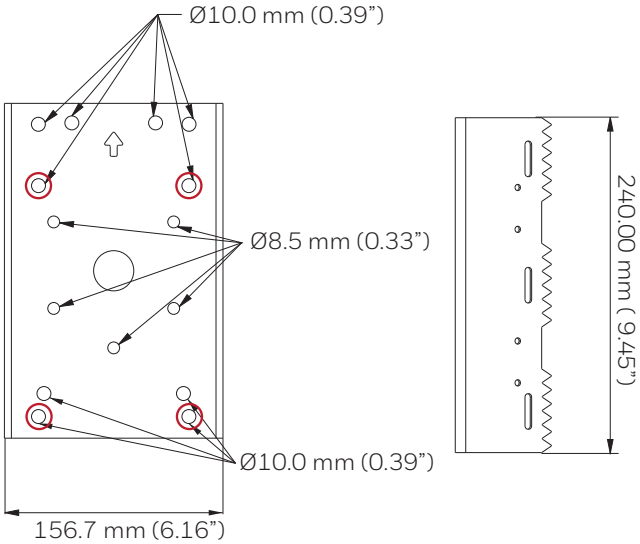

HA60CNMM

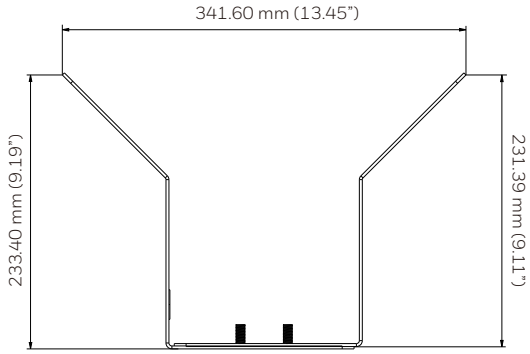

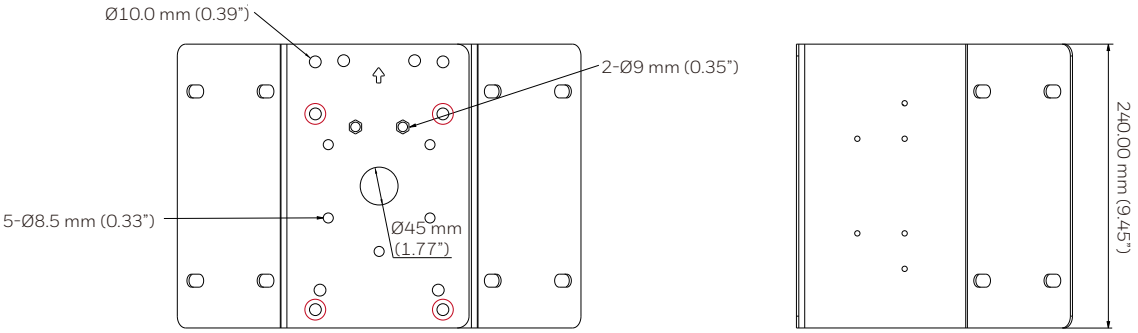

MOUNTS AND ACCESSORIES

DIMENSIONS

HA35JCBHBB

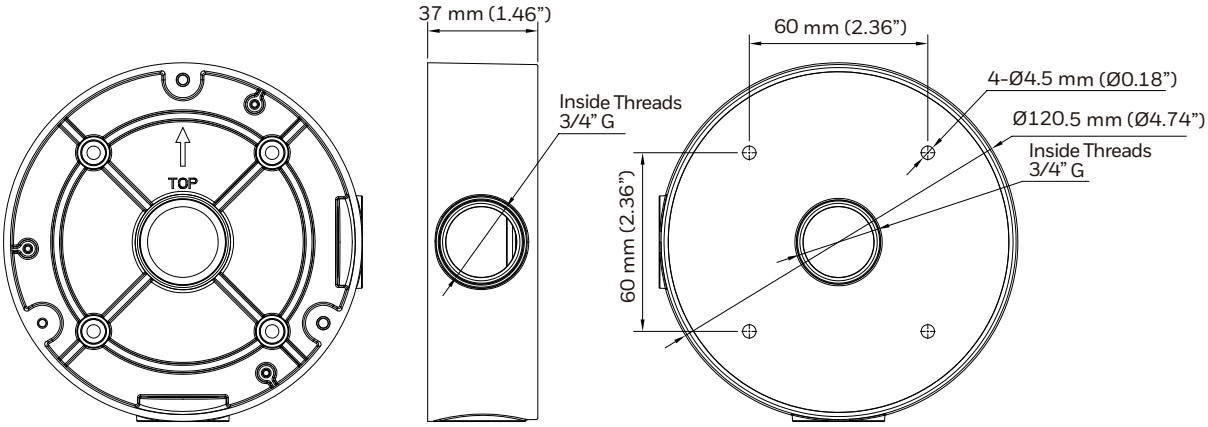

HAS1PTD

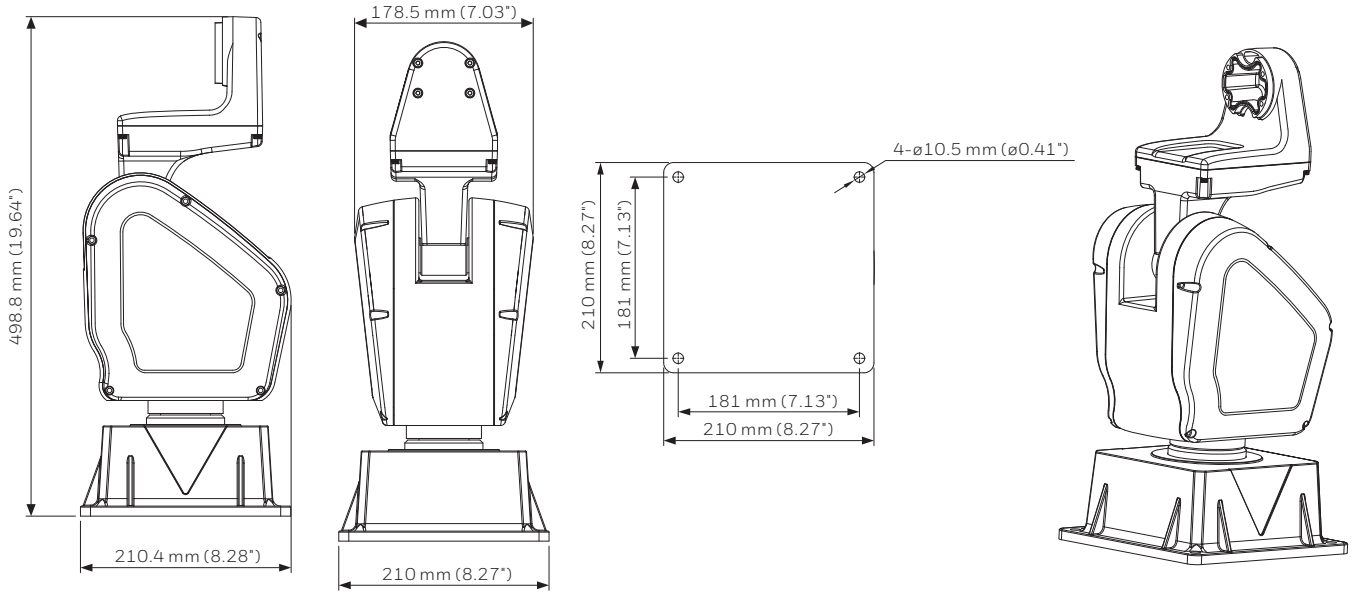

HA60WLMB1

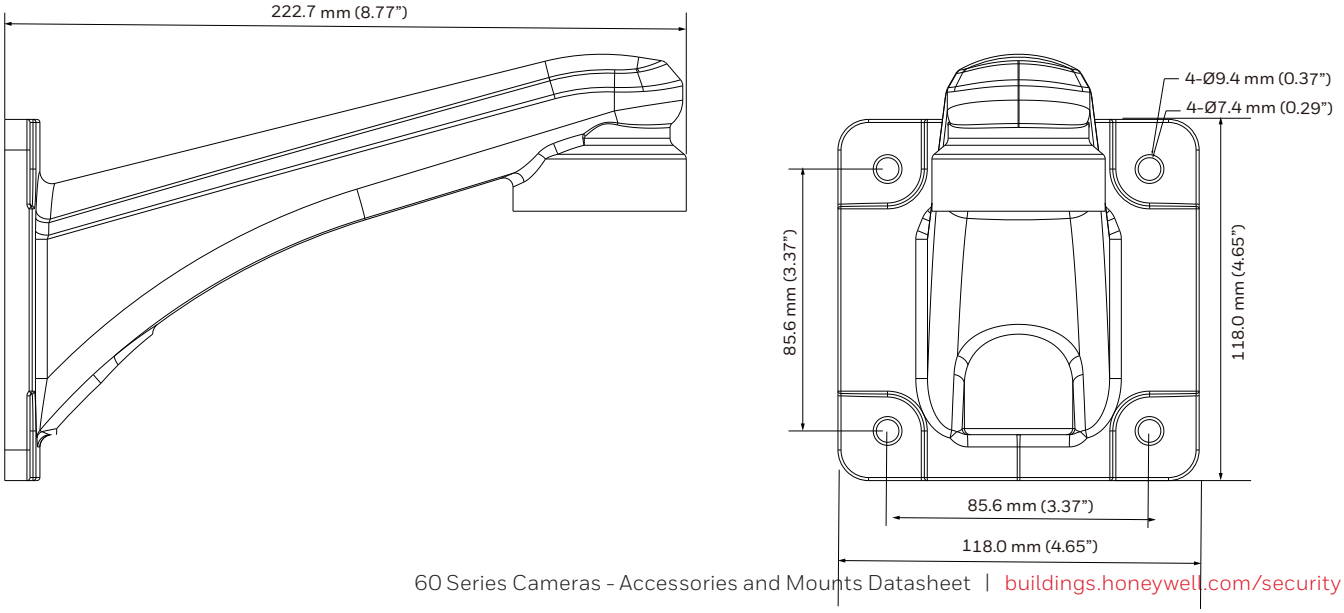

MOUNTS AND ACCESSORIES

DIMENSIONS

HA35PCM04B

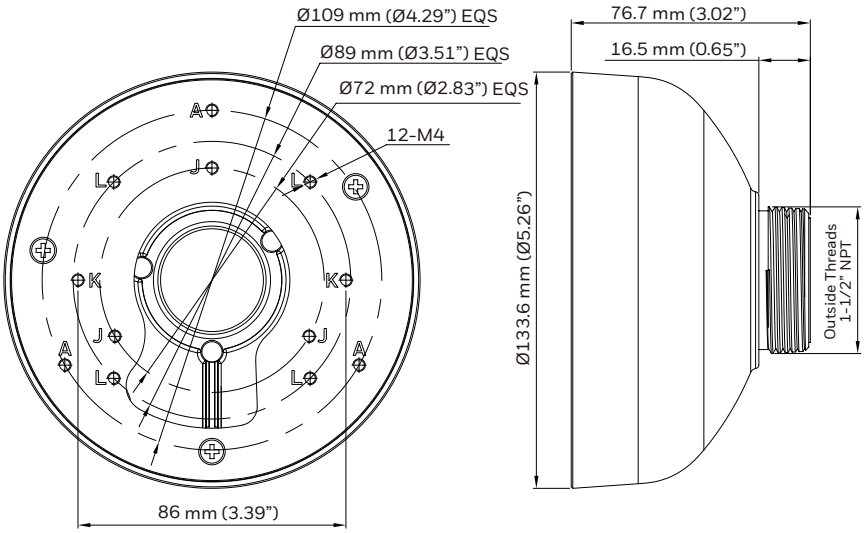

HA35CNM01

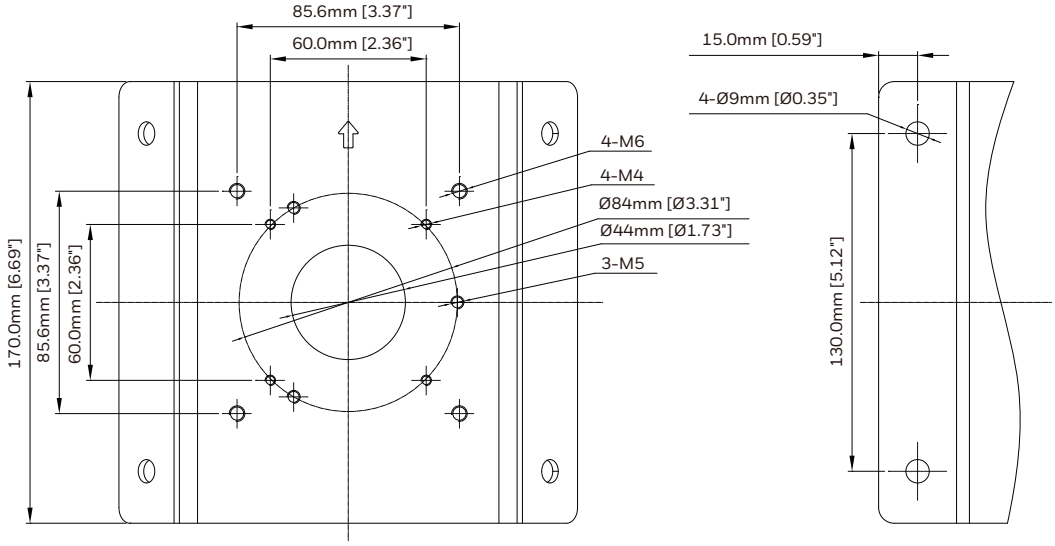

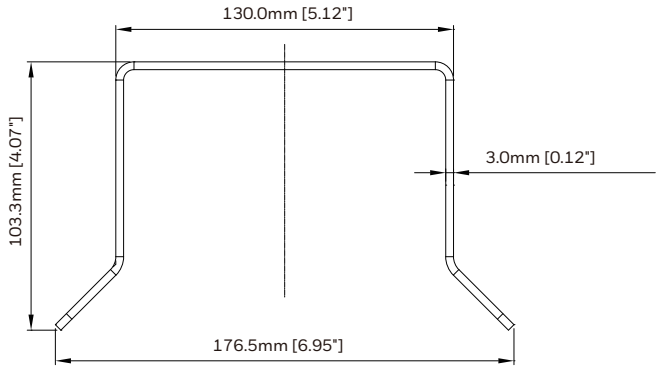

MOUNTS AND ACCESSORIES

DIMENSIONS

HA35CLM01

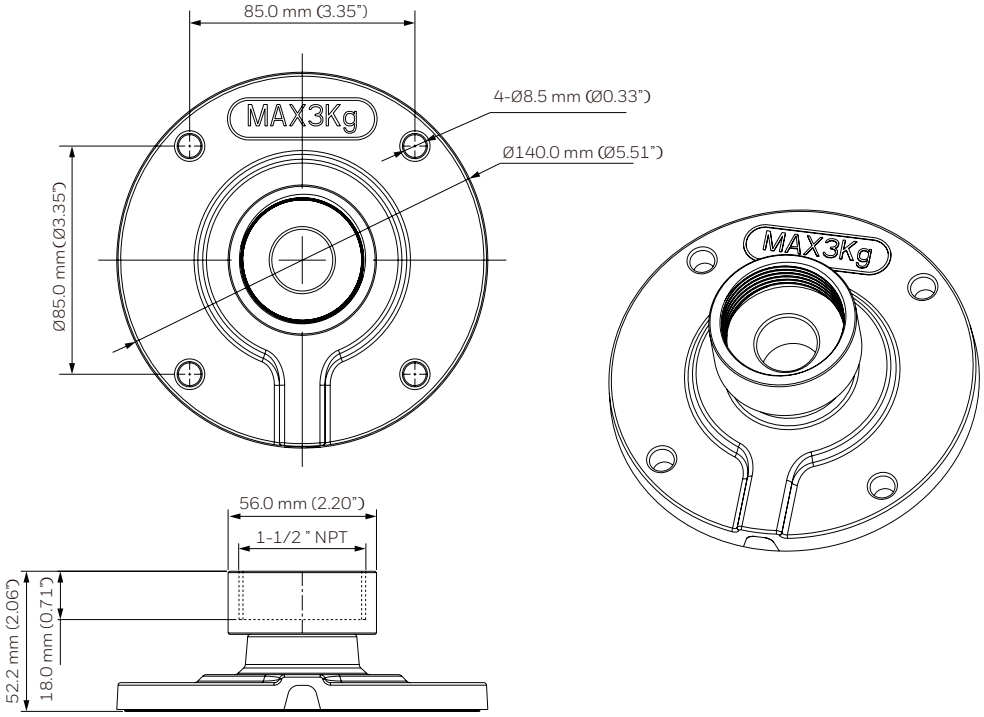

HA35CLM02

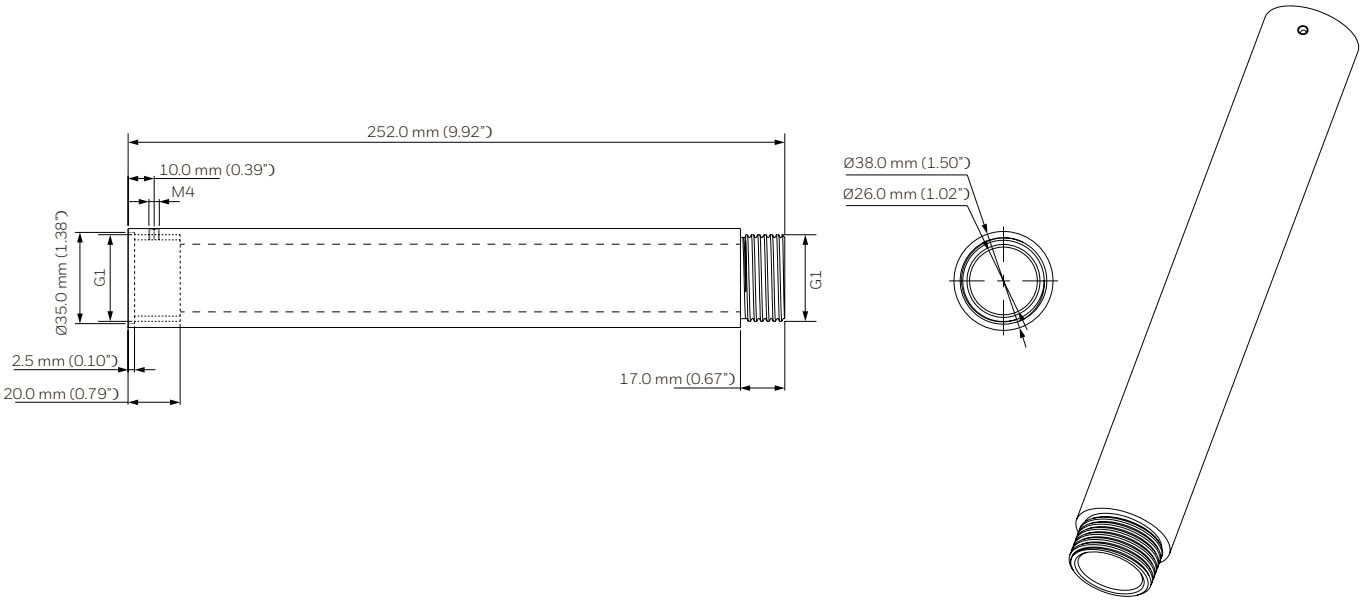

MOUNTS AND ACCESSORIES

DIMENSIONS

HA35PLM01

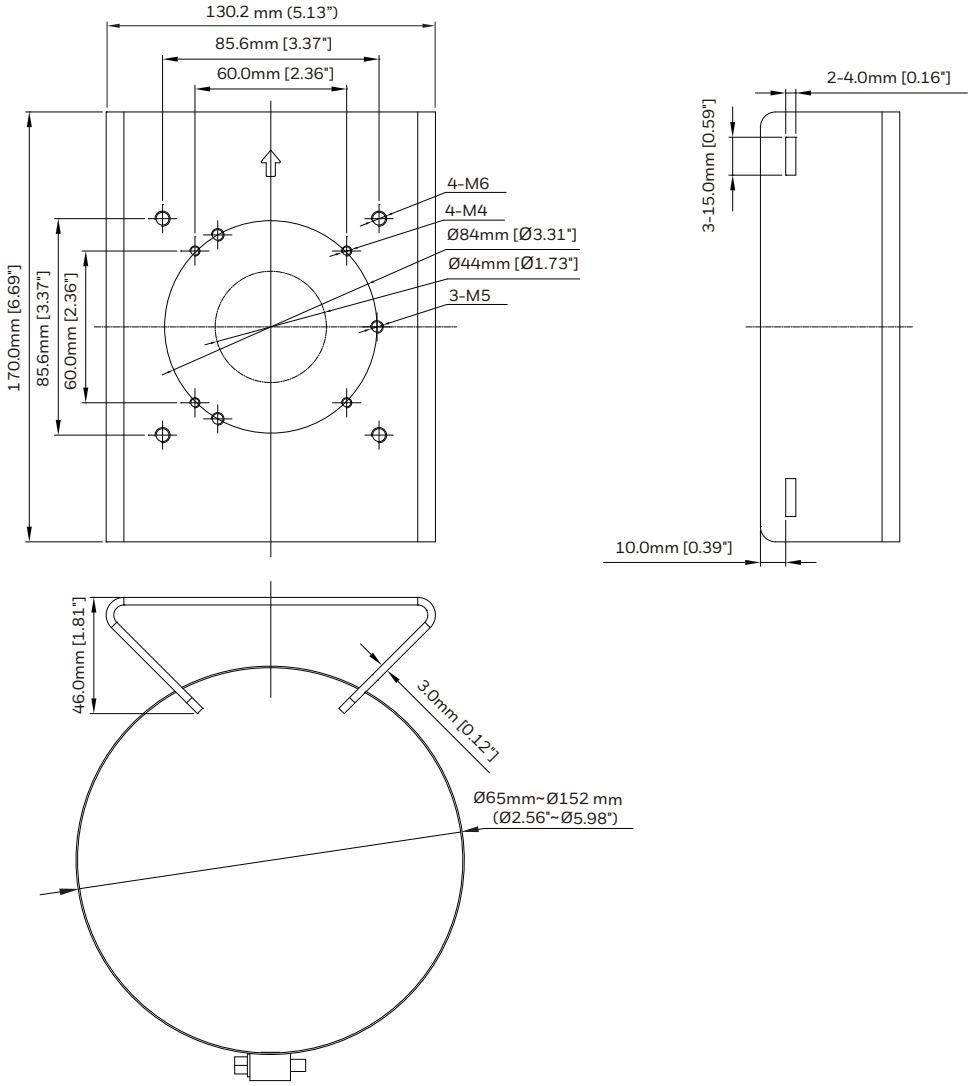

HA60SB3I / HA60SB4I / HA60CB3I / HA60CB4I

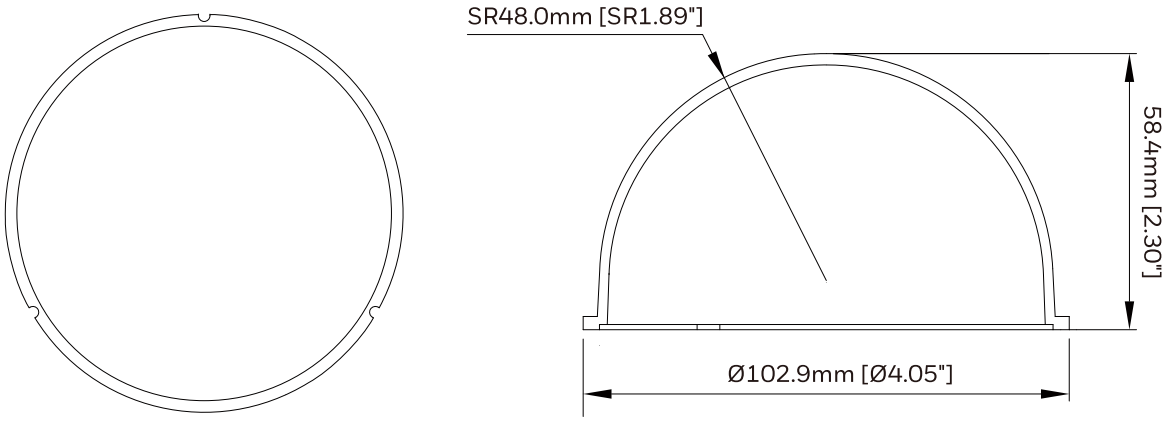

MOUNTS AND ACCESSORIES

DIMENSIONS

HAS1PTDP

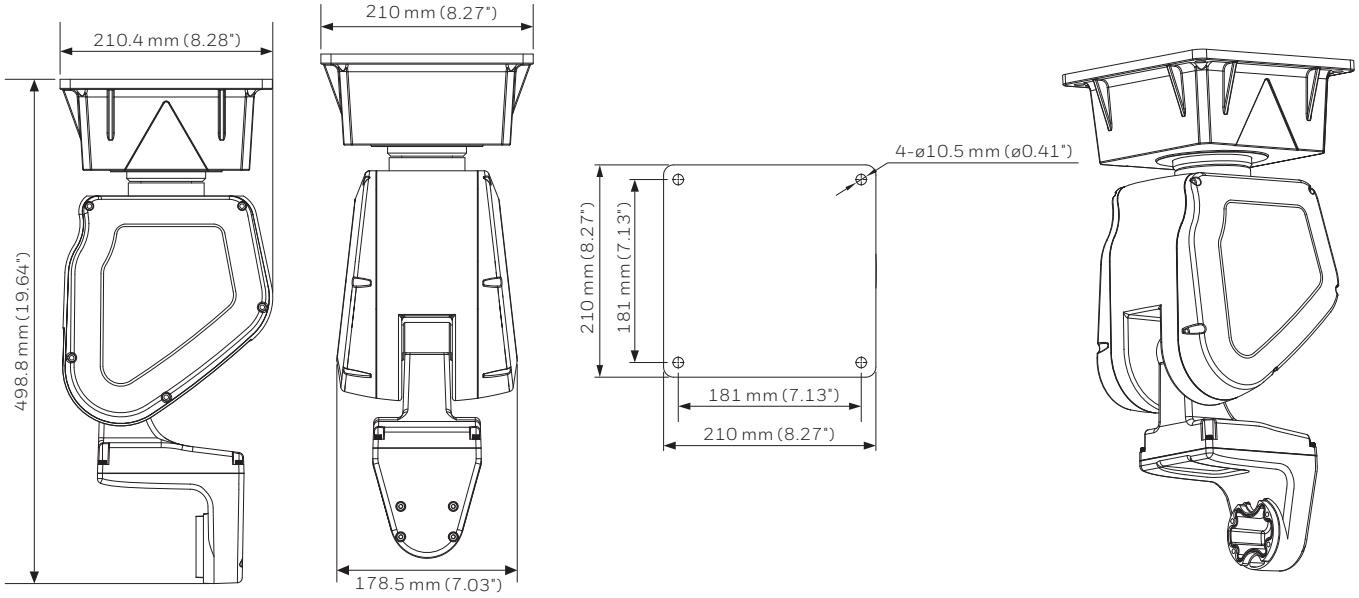

HA60JCBPT

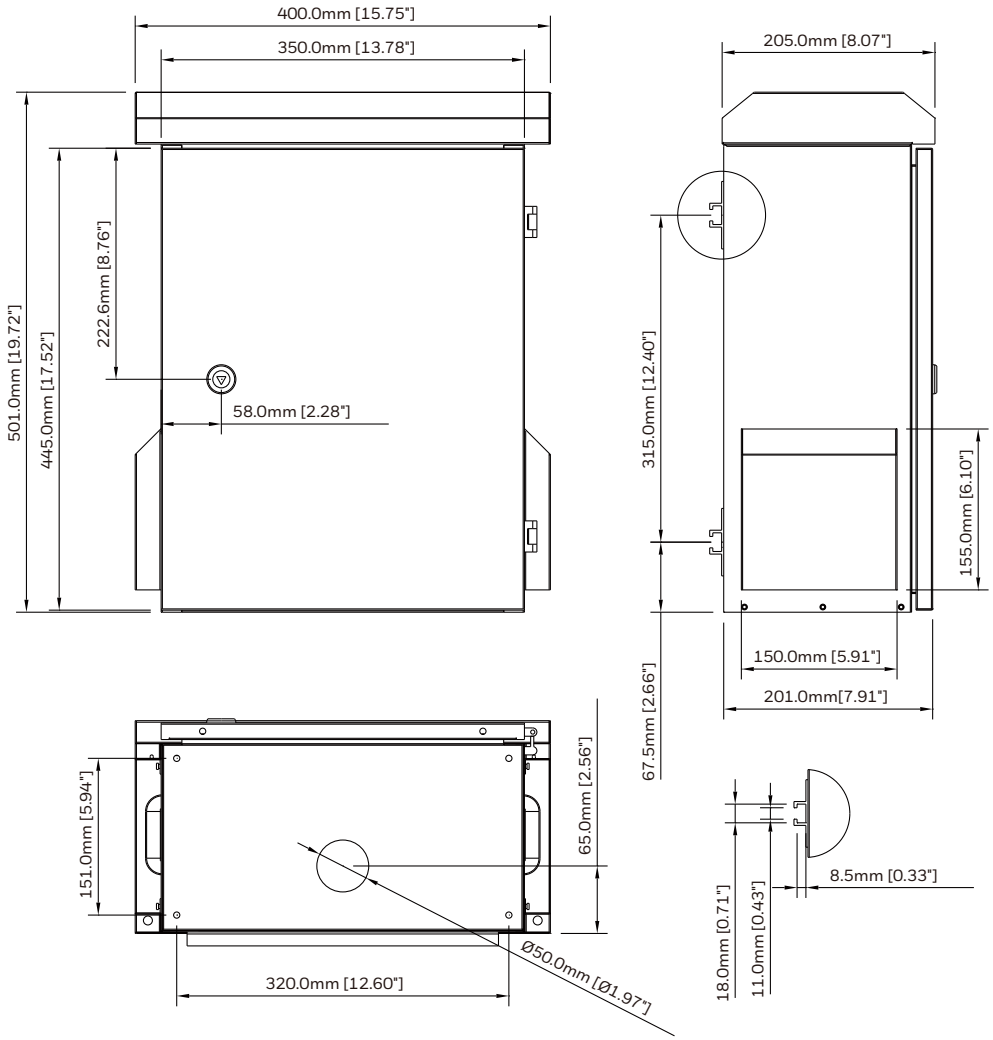

MOUNTS AND ACCESSORIES

DIMENSIONS

HA60ICK

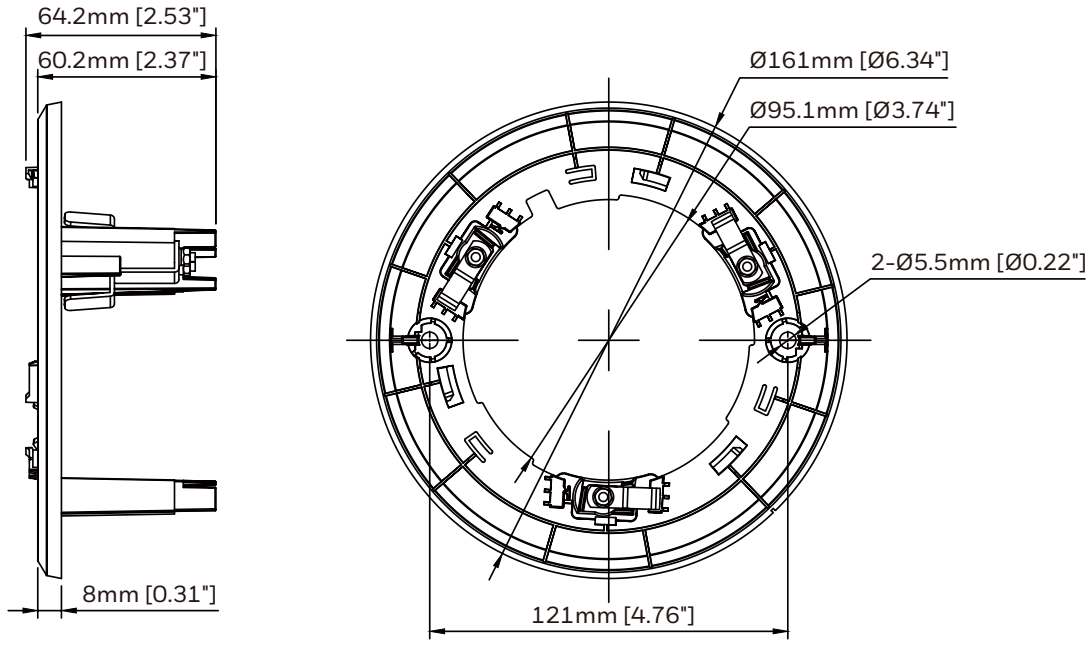

HA60APR

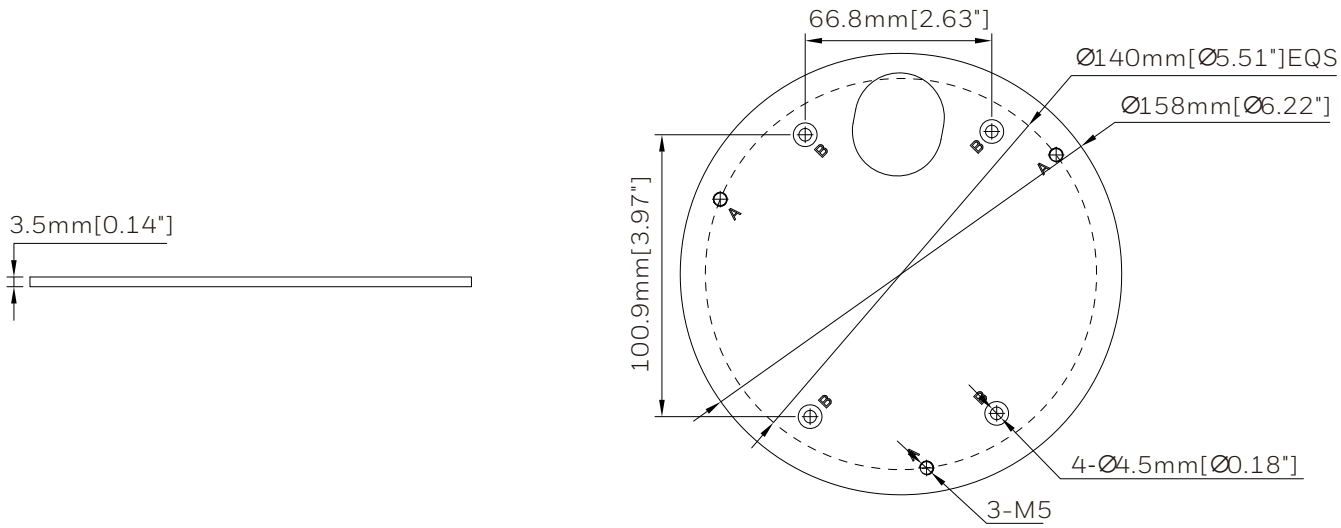

MOUNTS AND ACCESSORIES

ORDERING

MODEL	DESCRIPTION
HA60BB1	60S outdoor bullet junction box
HA60JCBH2	60S dome junction box
HA60PLMZI	60S PTZ pole mount bracket, white
HA60CNMZI	60S PTZ corner mount bracket, white
HA60WLMZI	60S PTZ wall mount bracket, white, 1.5NPT female
HA60WLM3	60S wall mount bracket for 3 inch dome, white
HA60WLM4F	60S wall mount bracket, with cap
HA60PMC4FI	60S outdoor dome fisheye cap 3/4NPT female
HA60PMC4FO	60S outdoor dome fisheye cap 1.5NPT male
HA60ICMM	60S multi-sensor in-ceiling mount bracket
HA30PMB01	30S pendant mount base
HA30PME02	30S pendant mount extend bracket
HA60CNMM	60S multi-sensor corner mount bracket
HA35JCBHBB	35S bullet junction box , IP66
HAS1PTD	Bi-spectrum bullet PT driver
HA60JCBPT	60S Bi-spectrum PT driver junction box
HA35PCM04B	35S cap for pendent mount, 1.5NPT male
HAS1PTDP	Bi-spectrum bullet PT driver pendant mount

MODEL	DESCRIPTION
HA60WIF	60S wifi dongle and USB adapter for camera configuration
HA60CB3I	60S indoor dome camera bubble replacment (clear) - for HC60W35R2P-V and HC60W35R4P-V
HA60CB4I	60S outdoor dome camera bubble replacement (clear) - for HC60W45R2P-V
HA60SB3I	60S indoor dome camera bubble replacement (smoke) - for HC60W35R2P-V and HC60W35R4P-V
HA60SB4I	60S outdoor dome camera bubble replacement (smoke) - for HC60W45R2P-V
HA60ICK	60S indoor dome in-ceiling mount kit
HA60APR	60S outdoor dome adapter plate and rubber
HA60CLM01	60S pendent mount base, 1.5NPT female
HA60CLM02	60S pendent extension mount, 1.5NPT male
HA60PCMZ	60S pendant mount cap, 1.5NPT female
HA60MLMM	60S multi-sensor camera wall mount bracket
HA60PLMM	60S multi-sensor pole mount bracket
HA60WLMZL	60S 1.5NPT longer wall mount, 1.5NPT female
HA60WLMB1	60S wall mount bracket, 1.5NPT female
HA35CLM01	35S ceiling mount base with adapter
HA35CLM02	35S ceiling mount pendent extension, 252mm
HA35CNM01	35S corner mount bracket
HA35PLM01	35S pole mount bracket

For more information
buildings.honeywell.com/security

Honeywell Commercial Security
715 Peachtree St. NE
Atlanta, GA 30308
1.800.323.4576
www.honeywell.com

Honeywell reserves the right, without notification, to make changes in product design or specifications.

HSV-SEC-60 Series-MNTS-ACC-05-US(0925)DS-Y
© 2025 Honeywell International Inc.

Honeywell