12 Clintonville Road, Northford, CT 06472-1610
Phone: 203-484-7161 Fax: 203-484-7118
www.silentknight.com

SK-RELAY Relay Control Module

SPECIFICATIONS

Normal Operating Voltage:	15 to 32 VDC
Maximum Current Draw:	6.5mA (LED on)
Average Operating Current:	230 µA direct poll; 255 µA group poll
EOL Resistance:	Not used
Temperature Range:	32˚F to 120˚F (0˚C to 49˚C)
Humidity:	10% to 93% Non-condensing
Dimensions:	4.675" H x 4.275" W x 1.4" D (119 mm H x 108 mm W x 36 mm D) (Mounts to a 4" square by 2 1/8" deep box.)
Accessories:	SMB500 Series Electrical Box

NOTE: The control module is manufactured using two configurations. Both variants offer the same functionality. Reference the section of the manual that reflects the terminal alignment on the module you are using.

RELAY CONTACT RATINGS

CURRENT RATING	MAXIMUM VOLTAGE	LOAD DESCRIPTION	APPLICATION
2 A	25 VAC	PF = 0.35	Non-coded
3 A	30 VDC	Resistive	Non-coded
2 A	30 VDC	Resistive	Coded
0.46 A	30 VDC	(L/R = 20ms)	Non-coded
0.7 A	70.7 VAC	PF = 0.35	Non-coded
0.9 A	125 VDC	Resistive	Non-coded
0.5 A	125 VAC	PF = 0.75	Non-coded
0.3 A	125 VAC	PF = 0.35	Non-coded

BEFORE INSTALLING

This information is included as a quick reference installation guide. Refer to the appropriate Silent Knight control panel installation manual for detailed system information. If the modules will be installed in an existing operational system, inform the operator and local authority that the system will be temporarily out of service. Disconnect power to the control panel before installing the modules.

NOTICE: This manual should be left with the owner/user of this equipment.

GENERAL DESCRIPTION

The SK-Relay Relay Control Module is intended for use in intelligent, two-wire systems where the individual address of each module is selected using the built-in rotary switches. It allows a compatible control panel to switch discrete contacts by code command. The relay contains two isolated sets of Form-C contacts, which operate as a DPDT switch and are rated in accordance with the table in the manual. Circuit connections to the relay contacts are not supervised by the module. The module also has a panel controlled LED indicator.

COMPATIBILITY REQUIREMENTS

To ensure proper operation, this module shall be connected to a compatible Silent Knight system control panel (list available from Silent Knight).

FIGURE 1. CONTROLS, INDICATORS, AND TERMINAL DEFINITIONS

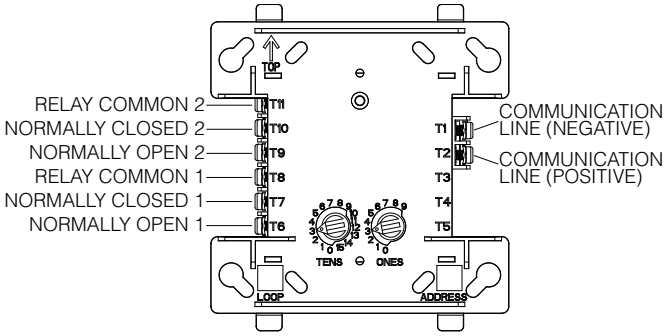

C2241-01

Note: For legacy terminal designations, see Figure 4.

MOUNTING

The SK-Relay mounts directly to 4-inch square electrical boxes. (See Figure 2). The box must have a minimum depth of 2 1/8 inches (54 mm). Surface mounted electrical boxes (SMB500-WH) are available from Silent Knight. The module can also mount to the DNR(W) duct housing.

FIGURE 2. MODULE MOUNTING

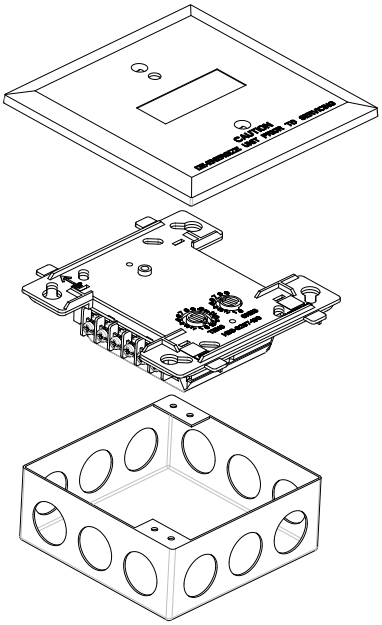

C2250-00

WIRING

NOTE: All wiring must conform to applicable local codes, ordinances, and regulations.

1. Install module wiring in accordance with the job drawings and appropriate wiring diagrams.
2. Set the address on the module per job drawings.
3. Secure module to electrical box (supplied by installer). See Figure 2.

Wire should be stripped to the appropriate length (recommended strip length is 1/4" to 3/8") (6 mm to 10 mm). Exposed conductor should be secured under the clamping plate and should not protrude beyond the terminal block area.

⚠CAUTION

Caution: Do not loop wire under terminals. Break wire run to provide supervision of connections.

NOTE: Dispose electronic waste following national and/or local regulations.

⚠WARNING

All relay switch contacts are shipped in the standby state (open) state, but may have transferred to the activated (closed) state during shipping. To ensure that the switch contacts are in their correct state, modules must be made to communicate with the panel before connecting circuits controlled by the module.

FIGURE 3. RELAY MODULE WIRING DIAGRAM

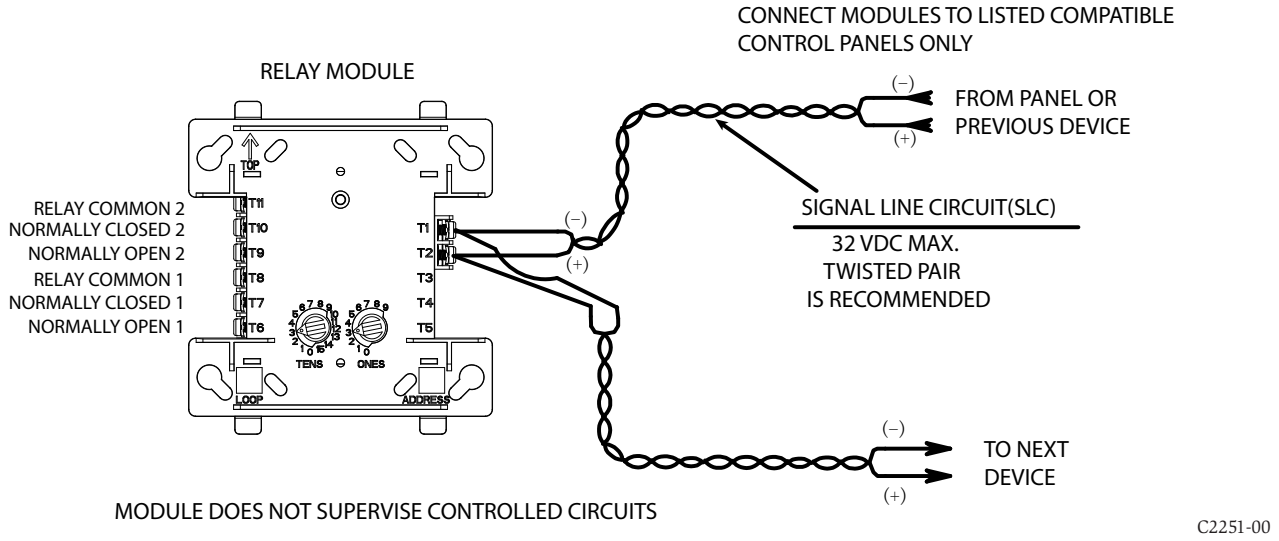

FIGURE 4. RETROFIT TERMINAL DESIGNATIONS FOR LEGACY SK-RELAY

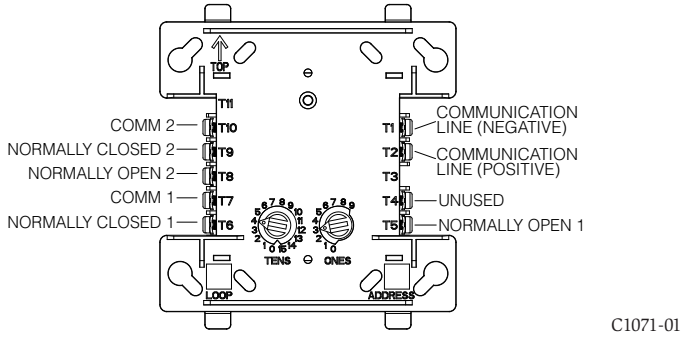

NOTE: Refer to pages 3 and 4 of this instruction manual for complete information regarding the legacy SK-RELAY configuration.

Silent Knight® and Honeywell® are registered trademarks of Honeywell International, Inc.

©2022 Honeywell. 04/26/2022

Honeywell

SILENT KNIGHT

SK-RELAY Relay Control Module
(Legacy SK-RELAY)

12 Clintonville Road, Northford, CT 06472-1610
Phone: 203-484-7161 Fax: 203-484-7118
www.silentknight.com

SPECIFICATIONS

Normal Operating Voltage:	15 to 32 VDC
Maximum Current Draw:	6.5mA (LED on)
Average Operating Current:	230 µA direct poll; 255 µA group poll
EOL Resistance:	Not used
Temperature Range:	32˚F to 120˚F (0˚C to 49˚C)
Humidity:	10% to 93% Non-condensing
Dimensions:	4.675" H x 4.275" W x 1.4" D (Mounts to a 4" square by 2 1/8" deep box.)
Accessories:	SMB500 Electrical Box; CB500 Barrier

NOTE: The control module is manufactured using two configurations. Both variants offer the same functionality. Reference the section of the manual that reflects the terminal alignment on the module you are using.

RELAY CONTACT RATINGS:

CURRENT RATING	MAXIMUM VOLTAGE	LOAD DESCRIPTION	APPLICATION
2 A	25 VAC	PF = 0.35	Non-coded
3 A	30 VDC	Resistive	Non-coded
2 A	30 VDC	Resistive	Coded
0.46 A	30 VDC	(L/R = 20ms)	Non-coded
0.7 A	70.7 VAC	PF = 0.35	Non-coded
0.9 A	125 VDC	Resistive	Non-coded
0.5 A	125 VAC	PF = 0.75	Non-coded
0.3 A	125 VAC	PF = 0.35	Non-coded

BEFORE INSTALLING

This information is included as a quick reference installation guide. Refer to the appropriate Silent Knight control panel installation manual for detailed system information. If the modules will be installed in an existing operational system, inform the operator and local authority that the system will be temporarily out of service. Disconnect power to the control panel before installing the modules.

NOTICE: This manual should be left with the owner/user of this equipment.

GENERAL DESCRIPTION

The SK-Relay is intended for use in intelligent, two-wire systems where the individual address of each module is selected using the built-in rotary switches. It allows a compatible control panel to switch discrete contacts by code command. The relay contains two isolated sets of Form-C contacts, which operate as a DPDT switch and are rated in accordance with the table in the manual. Circuit connections to the relay contacts are not supervised by the module. The module also has a panel controlled LED indicator.

COMPATIBILITY REQUIREMENTS

To ensure proper operation, this module shall be connected to a compatible Silent Knight system control panel (list available from Silent Knight).

FIGURE 1. CONTROLS AND INDICATORS:

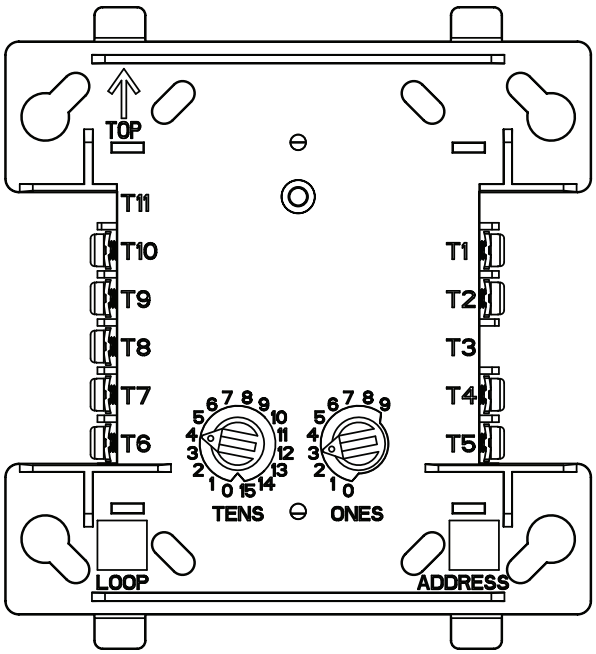

C1071-00

MOUNTING

The SK-Relay mounts directly to 4-inch square electrical boxes (see Figure 2A). The box must have a minimum depth of 2 1/8 inches. Surface mounted electrical boxes (SMB500) are available from Silent Knight.

FIGURE 2A. MODULE MOUNTING WITH BARRIER:

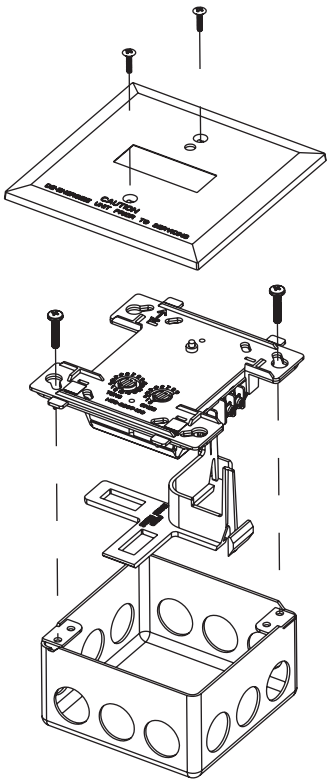

FIGURE 2B:

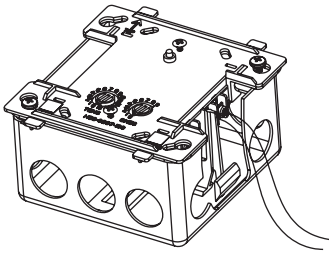

C1070-00

WIRING

NOTE: All wiring must conform to applicable local codes, ordinances, and regulations. When using control modules in nonpower-limited applications, the CB500 Module Barrier must be used to meet UL requirements for the separation of power-limited and nonpower-limited terminals and wiring. The barrier must be inserted into a 4" × 4" × 2⅛" junction box, and the control module must be placed into the barrier and attached to the junction box (Figure 2A). The power-limited wiring must be placed into the isolated quadrant of the module barrier (Figure 2B).

1. Install module wiring in accordance with the job drawings and appropriate wiring diagrams.
2. Set the address on the module per job drawings.
3. Secure module to electrical box (supplied by installer), as shown in Figure 2A.

NOTE: All references to power limited represent "Power Limited (Class 2)".

⚠WARNING

All relay switch contacts are shipped in the standby state (open) state, but may have transferred to the activated (closed) state during shipping. To ensure that the switch contacts are in their correct state, modules must be made to communicate with the panel before connecting circuits controlled by the module.

FIGURE 3. RELAY MODULE WIRING DIAGRAM:

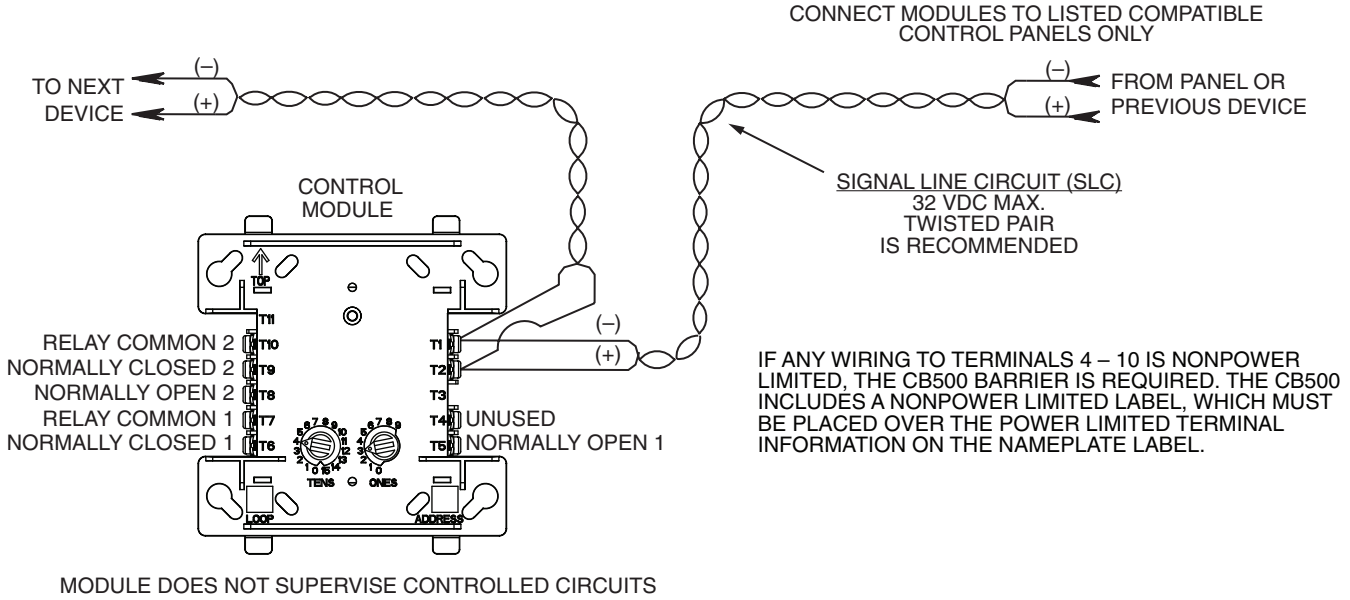

C0946-00

Silent Knight® and Honeywell® are registered trademarks of Honeywell International, Inc.

©2022 Honeywell. 04/26/2022