AVARRO™

CONFIGURED WALL MOUNTED ENCLOSED RACK SERIES

6U-12U

FULLY ASSEMBLED RACK SYSTEMS TO MANAGE COMPONENTS FOR NETWORKING, AUTOMATION, HI-FI AND HOME THEATER APPLICATIONS. DESIGNED WITH HEAVY-GAUGE STEEL AND MULTIPLE FEATURES SUCH AS REMOVEABLE SIDE PANELS AND REVERSIBLE LOCKING HINGED DOORS

SPECIFICATIONS:

- Fully welded steel construction
- Max. Weight capacity
  6U unit - 66lb. (30kg.)
  12U unit - 132 lb. (60kg.)
- Removable locking side panels (locks not included)
- Lockable tempered-glass door (option to reverse door)
- Vented top and bottom
- Heavy-duty hinges support rack and equipment
- Swing-out rack opens to the left
- Rear cable-routing knockouts

For more information please call 1-833-574-9124
or email AVARRO@adiglobal.com

To learn more about AVARRO products visit
avarro.adiglobaldistribution.us

RoHS COMPLIANT

TECHNICAL DATA

6U-12U

RK-ERW6U (6 Unit Space)

- Max Weight Capacity: 66lb. (30kg.)
- Dimensions of rack: 23.63" x 23.63" x 14.65"
- Box Dimensions: 26.38" x 26.38" x 22.05"
- UPC: 840049305663

RK-ERW12U (12 Unit Space)

- Max Weight Capacity: 132lbs. (60kg.)
- Dimensions of rack: 23.63" x 23.63" x 25.16"
- Box Dimensions: 26.38" x 26.38" x 32.68"
- UPC: 840049305670

For more information please call 1-833-574-9124
or email AVARRO@adiglobal.com

To learn more about AVARRO products visit
avarro.adiglobaldistribution.us

TECHNICAL DRAWING

6U-12U

Expanded View and Parts

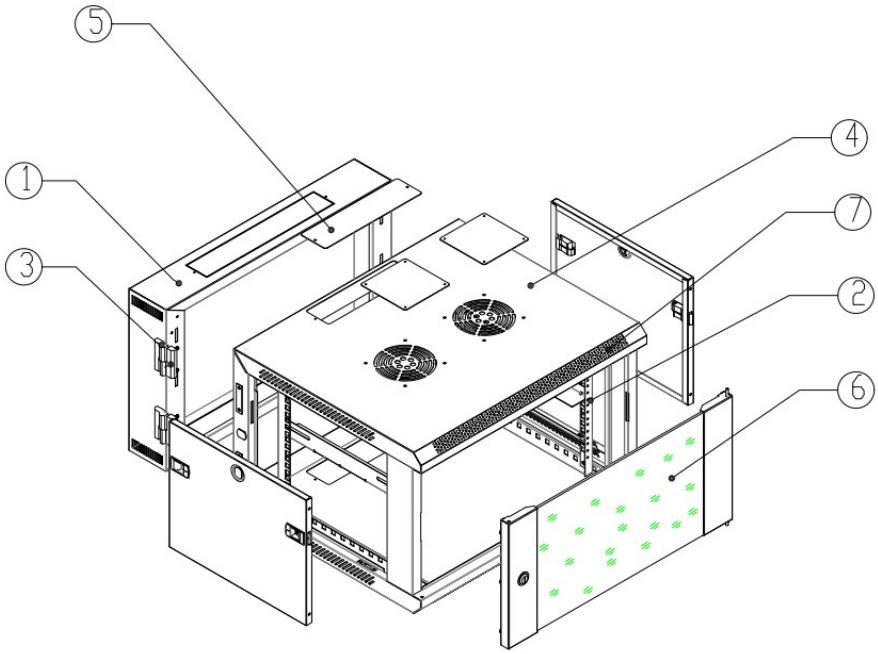

1 Frame (side that mounts to wall)
2 Mounting Rail
3 Hinges
4 Swing-out rack opens to the left
5 Cable Management Cover
6 Front Glass Door (option to reverse door)
7 Vented Top and Bottom (fans not included)

For more information please call 1-833-574-9124
or email AVARRO@adiglobal.com

To learn more about AVARRO products visit
avarro.adiglobaldistribution.us

TECHNICAL DRAWING

6U-12U

Dimensions

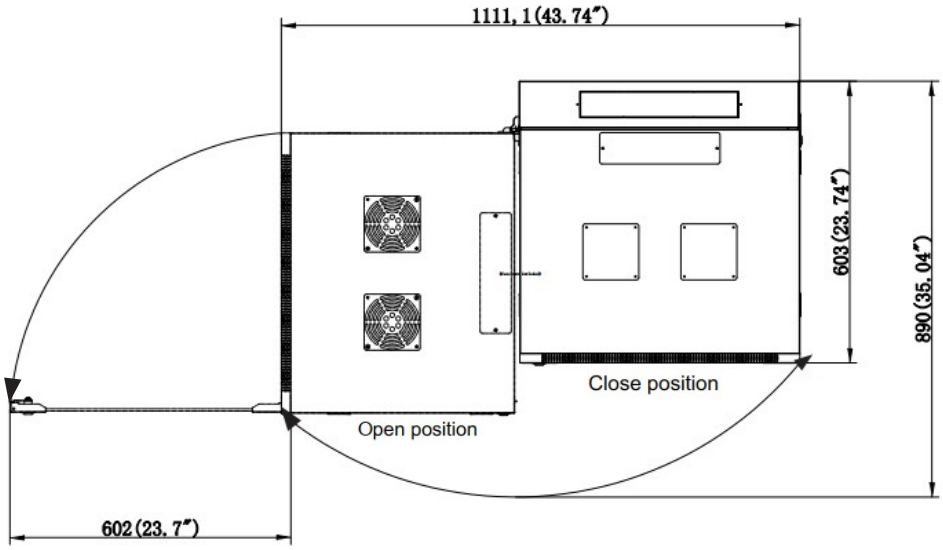

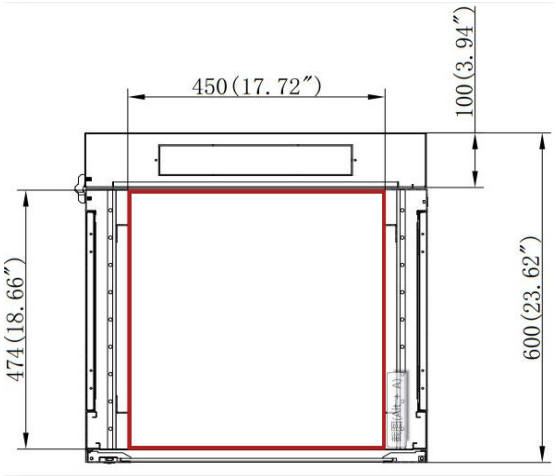

Usable Space Inside Rack in Red

dims of the usable space :450(17.72")width,474(18.66")depth

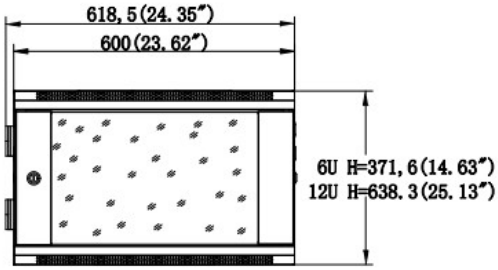

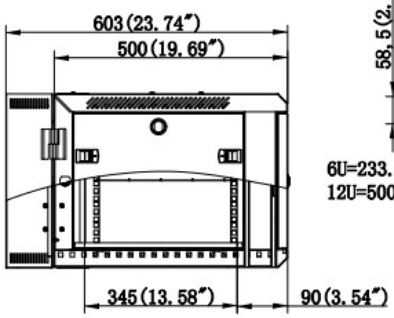

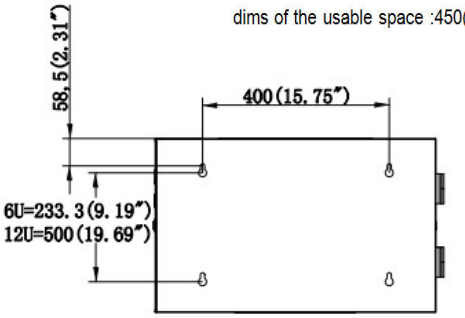

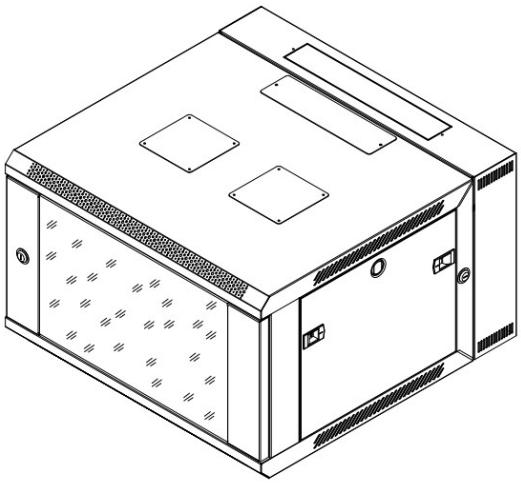

For more information please call 1-833-574-9124
or email AVARRO@adiglobal.com

To learn more about AVARRO products visit
avarro.adiglobaldistribution.us