AVARRO™

ENCLOSED RACKS
& ACCESSORIES

Keep AV and IT equipment organized with additional accessories to improve your setup. Our accessories are designed to fit standard 19″ racks, including our AVARRO floor-standing and wall racks.

RACK FEATURES

1. Reversible, Locking Glass Door
2. Removable Side Panels
3. Back Access Panel
4. Preinstalled Shelves and Blanks
5. Two DC UL Listed Fans
6. Vented Top and Bottom (fans not included)
7. Hinged Back Panel
8. Cable Routing Knockouts
9. Casters and Leveling Feet

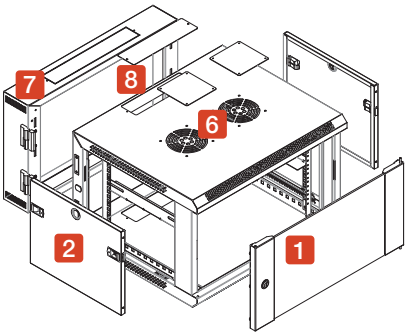

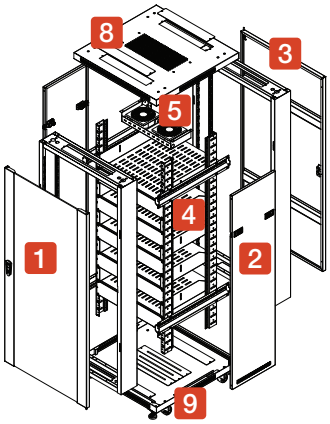

Part #	Description	W x D x H (w/o casters)	Max. Load	Fans	Shelves & Blanks
RK-ERW6U	6U Wall Rack	23.6" x 23.6" x 14.7"	66 lbs.	--	--
RK-ERW12U	12U Wall Rack	23.6" x 23.6" x 25.2"	132 lbs.	--	--
RK-ER18U	18U Floor Rack	23.6" x 23.6" x 35.5"	600 lbs.	2	3
RK-ER27U	27U Floor Rack	23.6" x 23.6" x 51.3"	900 lbs.	2	5
RK-ER42U	42U Floor Rack	23.6" x 23.6" x 77.5"	1,322 lbs.	2	9

ACCESSORIES

RK-1UVSHLF
1U Vented Rack Shelf

RK-1USHELF
1U Rack Shelf

RK-2UVSHLF
2U Vented Rack Shelf

RK-2USHELF
2U Rack Shelf

RK-FBP1U
1U Flanged Blank Panel

RK-FBP2U
2U Flanged Blank Panel

RK-BLPANEL
1U Blank Rack Panel

RK-BGP1U
1U Brush Panel
Grommet Strip

RK-LSBAR10
Horizontal Lacing Bars

1.800.233.6261
AVARRO.adiglobaldistribution.us

Learn more about
AVARRO