INSTALLATION AND MAINTENANCE INSTRUCTIONS

L-Series
Low Frequency Sounder/Strobes

3333 Unity Drive, Mississauga, ON L5L 3S6
800/736-7672, FAX: 905-812-0771
www.systemsensor.ca

For use with the following models: Standard Wall Mount Sounder: HRLA-LF, HWLA-LF. Compact, Silenceable Wall Mount Sounder: HGRLZA-LF, HGWLZA-LF. Ceiling Mount Sounder: HCRLA-LF, HCWLA-LF. Wall Mount Sounder Strobe: P2RLA-LF, P2WLA-LF.
(Sounder Strobes have English/French marking. Bezels required for other languages are sold separately.)

PRODUCT SPECIFICATIONS

Operating Temperature:	32°F to 120°F (0°C to 49°C)
Humidity Range:	10 to 93% Non-condensing
Strobe Flash Rate:	1 flash per second
Nominal Voltage (Low Frequency Sounder):	Regulated 24VDC/FWR
Nominal Voltage(Low Frequency Sounder/Strobe):	Regulated 24VDC/FWR
Operating Voltage Range (includes fire alarm panels with built in sync):	16 to 33V (24V nominal)
Operating Voltage with MDL3A Sync Module:	16.5 to 33V (24V nominal)
Input terminal wire gauge:	12 to 18 AWG
Silence Time	10 minutes max.
Power down time to reset silence	4 seconds

DIMENSIONS FOR PRODUCTS AND ACCESSORIES

WALL PRODUCTS	Length	Width	Depth
Standard Sounder	5.6" (143mm)	4.7" (119mm)	1.5" (38 mm)
Sounder Strobe	5.6" (143mm)	4.7" (119mm)	1.93" (49mm)
Compact Silenceable Sounder	5.26" (133 mm)	3.46" (88 mm)	1.5" (38 mm)
Standard device with SBBRL/WL Surface Mount Back Box	5.7" (145 mm)	4.8"(120mm)	3.3" (84mm)
Compact device with SBBGRL/WL Surface Mount Back Box	5.4" (137 mm)	3.6"(91mm)	3" (76mm)
NOTE: SBBRL/WL Surface Mount Back Box intended only for standard sounder and sounder strobe. SBBGRL/WL Surface Mount Back Box intended for compact sounder.			

CEILING PRODUCTS	Diameter	Depth
Sounder	6.83" (173.5mm)	1.4" (36mm)
Sounder with SBBCRL/WL Surface Mount Back Box	6.92" (175.8mm)	3.9" (99mm)

JUNCTION BOX OPTIONS

Standard Indoor Products: 4" x 4" x 1½" (10.16 cm x 10.16 cm x 3.8 cm), Single Gang, Double Gang, 4" Octagon, SBBRL/WL (wall), SBBCRL/WL (ceiling)
Compact Indoor Products: Single Gang, SBBGRL/WL (wall)

NOTICE: This manual shall be left with the owner/user of this equipment.

GENERAL DESCRIPTION

The L-Series low frequency series of notification appliances offers a range of low frequency sounder and low frequency sounder/strobe products for wall and ceiling applications. Studies have shown that low frequency audible devices that operate around 520Hz are more effective in waking individuals in sleeping areas. These products are electrically backward compatible with SpectrAlert Advance notification appliances. The 2-wire products fit systems where a single NAC controls both sounder and strobe. The System Sensor MDL3A module may be used to provide synchronization.

The models HGRLZA-LF and HGWLZA-LF include an LED alarm indicator and silence switch. (See Figures 9 and 10.) During alarm, pressing the silence switch will silence the horn and illuminate the LED for a maximum of 10 minutes. The silence can be reset by removing power for a minimum of 4 seconds. Also included in these models is a silence test feature. To use this, activate the NAC at the panel and put the system into alarm. Hold the silence button for 5 to 10 seconds and release; the unit will silence but resound in 10 seconds. These devices are to be installed according to the requirements of the local codes/authorities and CAN/ULC S524.

For non-silenceable models, install a separate remote switch with the sounder or sounder strobes. Use a Residential Silence Module (model RSM-1A or a RSM-1RA and RSM-1SWA) to comply with the requirements of the local codes/authorities and CAN/ULC S524 for dwelling spaces.

Sounder-only models are approved for wall or ceiling installations. Sounder Strobe models approved for wall use only.

FIRE ALARM SYSTEM CONSIDERATIONS

The National Building Code of Canada and CAN/ULC S525 require that all sounders used for building evacuation produce temporal coded signals. Signals other than those used for evacuation purposes do not have to produce the temporal coded signal. The National Fire Alarm Code, NFPA 72, requires that audible appliances installed in sleeping areas produce a low frequency alarm signal that shall be a square wave or provide equivalent awakening ability (effective Jan. 1, 2014). System Sensor recommends spacing notification appliances in compliance with NFPA 72.

LOOP DESIGN AND WIRING

The system designer must make sure that the total current drawn by the devices on the loop does not exceed the current capability of the panel supply, and that the last device on the circuit is operated within its rated voltage. The current draw information for making these calculations can be found in the tables within this manual. For convenience and accuracy, use the voltage drop calculator on the System Sensor website.

When calculating the voltage available to the last device, it is necessary to consider the voltage drop due to the resistance of the wire. The thicker the wire, the smaller the voltage drop. Wire resistance tables can be obtained from electrical handbooks. Note that if Class A wiring is installed, the wire length may be up to twice as long as it would be for circuits that are not fault tolerant.

NOTE: The total number of strobes on a single NAC must not exceed 69 for 24 volt applications. Loop resistance on a single NAC should not exceed 120 ohms for 24 volt.

NOTE: A shorting spring is provided between terminals 2 and 3 of the mounting plate to enable wiring checks after the system has been wired, but prior to installation of the final product. This spring will automatically disengage when the product is installed, to enable supervision of the final system.

Removal of a notification device will result in an open circuit indication on the NAC.

MOUNTING AND REMOVING APPLIANCE

1. Attach mounting plate to junction box. (See Figures 3, 5, 7, and 9.)
2. Connect field wiring to terminals. (See Figures 1 and 2.)
3. If the product is not to be installed at this point, use the paint cover to prevent contamination of the mounting plate.
4. To attach product to mounting plate:
   a. Remove the protective dust cover.
   b. Hook the tabs on the top of the product housing into the grooves on mounting plate.
   c. Pivot the product into position to engage the terminals on the mounting plate. Make sure that the tabs on the back of the product housing fully engage with the mounting plate.
   d. Hold product in place with one hand, and secure product by tightening the single mounting screw in the front of the product housing.
5. To remove products from the mounting plate, press the locking button after loosening the captivate mounting screw. (Ceiling models only)

INSTALLING A SURFACE MOUNT BACK BOX

1. The surface mount back box may be secured directly to the wall or ceiling. Use of grounding bracket with ground screw is optional. (See Figures 4, 6, 8, and 10.)
2. The wall mount box must be mounted with the up arrow pointing up. (See Figure 12.)
3. Threaded knockout holes are provided for the sides of the box for ¾ inch and ½ inch conduit adapter. Knockout plugs in the back of the box can be used for ¾ inch and ½ inch rear entry.
4. To remove the ½ inch or ¾ inch knockout, place the blade of a flat-head screwdriver along the outer edge and work your way around the knockout as you strike the screwdriver. (See Figure 13.)

   NOTE: Use caution not to strike the knockout near the top edge of the surface mount back box.
5. V500 and V700 wiremold raceways are also provided. Use V500 for low profile applications and V700 for high profile applications.
6. To remove the knockout, turn pliers up. (See Figure 13.)
7. Attach the mounting plate to the surface mount back box using the four unpainted screws. (See Figures 4, 6, 8, and 10.)
8. To wire and attach the product, follow steps 4 and 5 of “Mounting and Removing Appliance” (above).

FIGURE 1. WIRING DIAGRAM

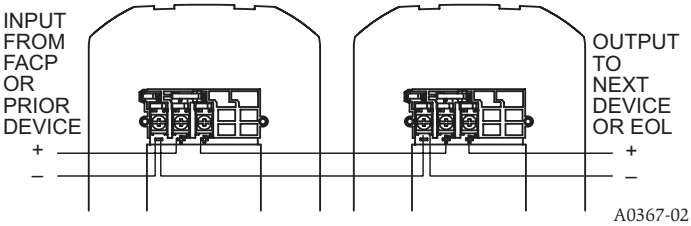

⚠CAUTION

Factory finish should not be altered: Do not paint!

⚠CAUTION

Do not over tighten mounting plate screws; this may cause mounting plate to flex.

FIGURE 2. WIRING TERMINALS, SHORTING SPRING, AND STRIP GUIDE

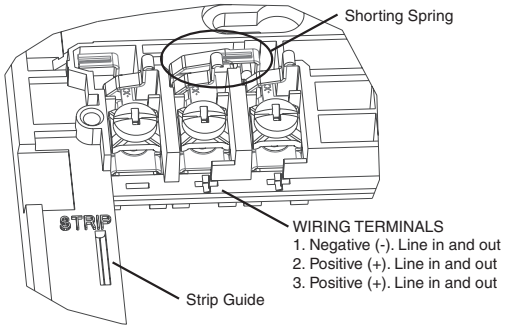

FIGURE 3. WALL MOUNT LOW-FREQUENCY SOUNDER WITH JUNCTION BOX

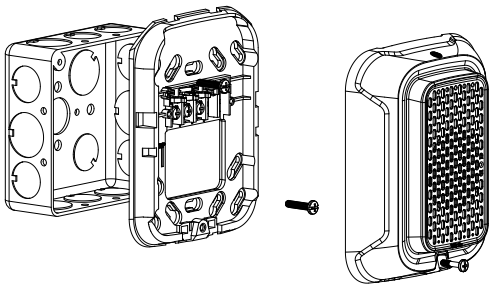

FIGURE 4. WALL MOUNT LOW-FREQUENCY SOUNDER WITH SURFACE-MOUNT BACK BOX

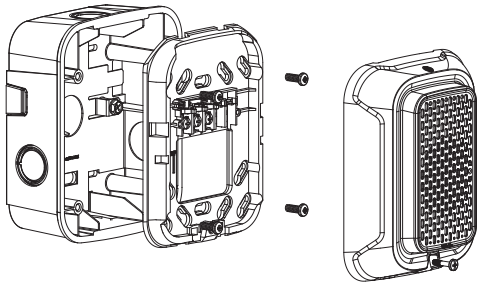

FIGURE 5. CEILING MOUNT LOW-FREQUENCY SOUNDER WITH JUNCTION BOX (SOUNDER-ONLY SHOWN

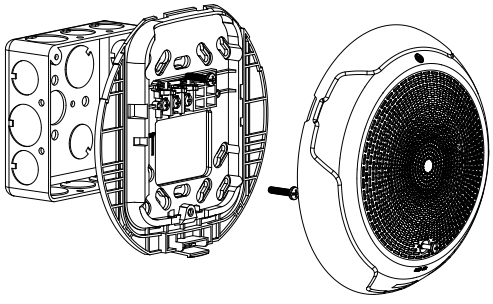

FIGURE 6. CEILING MOUNT LOW-FREQUENCY SOUNDER WITH SURFACE-MOUNT BACK BOX (SOUNDER STROBE SHOWN)

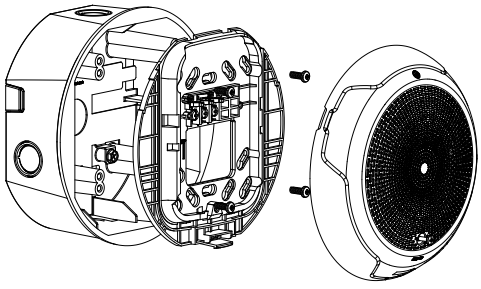

TABLE 1. WALL SOUNDER STROBE CURRENT DRAW (mA) AND SOUND OUTPUT (dBA)

Pos	Tone	Volume Setting	Current draw (mA)														Sound Output (dBA) Reverberant		Sound Output (dBA) Anechoic	
			16-33 VDC							16-33 FWR							16-33 V		16-33 V	
			15cd	30cd	75cd	95cd	110cd	135cd	185cd	15cd	30cd	75cd	95cd	110cd	135cd	185cd	DC	FWR	DC	FWR
1	Temp 3	High	98	115	158	173	182	212	266	136	153	188	206	228	258	304	80	80	82	82
2		Low	98	102	141	162	173	202	255	150	150	176	194	216	242	280	76	76	78	78
3	Temp 4	High	98	108	137	151	178	202	252	200	198	169	188	212	242	290	80	80	82	82
4		Low	102	104	122	136	163	187	237	176	174	154	173	197	227	275	76	76	78	78
5	Contin-	High	141	158	198	216	234	264	305	190	207	249	268	289	321	368	80	80	82	82
6	uous	Low	120	128	179	196	215	244	285	165	182	226	244	266	297	342	76	76	78	78

FIGURE 7. WALL MOUNT LOW-FREQUENCY SOUNDER STROBE WITH JUNCTION BOX

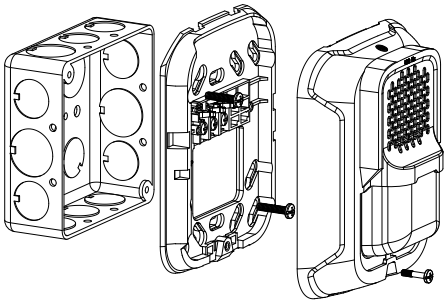

A0583-00

FIGURE 8. WALL MOUNT LOW-FREQUENCY SOUNDER STROBE WITH SURFACE-MOUNT BACK BOX

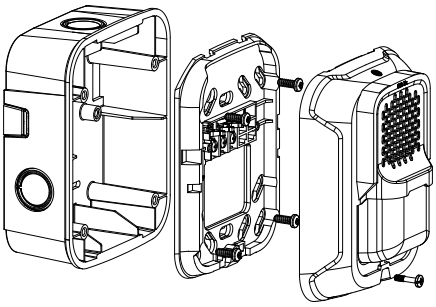

A0584-00

FIGURE 9. COMPACT WALL MOUNT LOW-FREQUENCY SOUNDER SOUNDER WITH LED ALARM INDICATOR AND SILENCE SWITCH, IN JUNCTION BOX

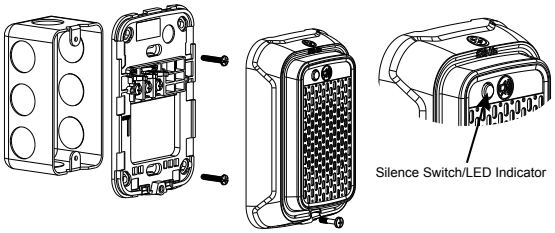

A0585-00

FIGURE 10. COMPACT WALL MOUNT LOW-FREQUENCY SOUNDER WITH LED ALARM INDICATOR AND SILENCE SWITCH, IN SURFACE-MOUNT BACK BOX

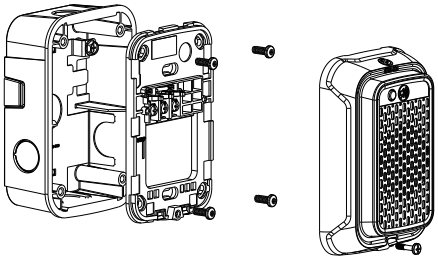

A0586-00

TONE AND CANDELA SELECTION

Tables 1 and 2 list current draw and sound output for available settings. Figures 14 – 15 list the minimum light output requirements per ULC.

Sounder tone and volume: Turn the rotary switch on the back of the product.

Candela: Adjust the slide switch on the rear of the product to the desired candela setting. Candela setting will display in the small window on the front of the unit. All products meet the light output profiles specified in the appropriate ULC Standards.

TABLE 2. LOW FREQUENCY WALL AND CEILING SOUNDER ONLY CURRENT DRAW (mA)

Pos	Sound Patterns	Volume Setting	Current Draw (mA)		Sound Output (dBA) Reverberant		Sound Output (dBA) Anechoic	
			16–33 Volts		16-33 V		16-33 V	
			DC	FWR	DC	FWR	DC	FWR
1	Temp 3	High	108	150	80	80	82	82
2		Low	78	76	76	76	78	78
3	Temp 4	High	111	151	80	80	82	82
4		Low	80	76	76	76	78	78
5	Contin-	High	111	151	80	80	82	82
6	uous	Low	80	76	76	76	78	78
7*	Coded	High	111	151	80	80	82	82
8*		Low	80	76	76	76	78	78

*NOTE: For coded tones, temporal coding must be provided by the NAC. If the NAC voltage is held constant, the sounder output will remain constantly on. Coded ratings provided are for continuous voltage.

TAMPER SCREW

For tamper resistance, the standard captive screw may be replaced with a Torx screw, ordered separately.

To remove the captive screw, back out the screw and apply pressure to the back of the screw until it disengages from the housing. Replace with Torx screw. (See Figure 11.)

FIGURE 11. TAMPER SCREW

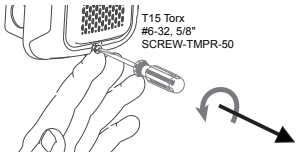

A0478-00

FIGURE 12. SURFACE MOUNT BACK BOX UP ARROW

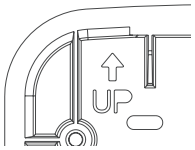

A0481-00

FIGURE 13. KNOCKOUT AND V500/V700 REMOVAL FOR SURFACE MOUNT BACK BOX

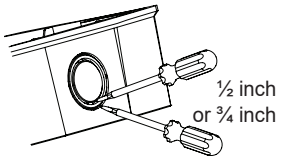

A0465-01

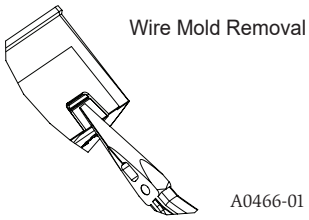

A0466-01

TABLE 7. SOUND DISTRIBUTION FOR WALL AND CEILING APPLICATIONS

Directional Sound Characteristics				
Sounder Only	**Horizontal Angle**		**Vertical Angle**	
	30	-3 dBA	50	-3 dBA
	70	-6 dBA	75	-6 dBA

Sounder Strobe	**Horizontal Angle**		**Vertical Angle**	
	30	-3 dBA	52	-3 dBA
	69	-6 dBA	75	-6 dBA

FIGURE 14. LIGHT OUTPUT – HORIZONTAL DISPERSION

Degrees*	Percent of Rating
0	100
5-25	90
30-45	75
50	55
55	45
60	40
65	35
70	35
75	30
80	30
85	25
90	25
Compound 45 to the left	24
Compound 45 to the right	24

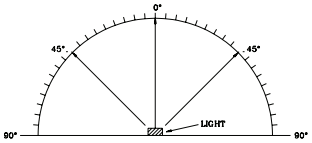

A0467-000

FIGURE 15. VERTICAL DISPERSION, WALL TO FLOOR

Degrees*	Percent of Rating
0	100
5-30	90
35	65
40	46
45	34
50	27
55	22
60	18
65	16
70	15
75	13
80	12
85	12
90	12

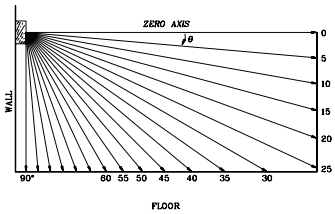

A0469-00

*Tolerance of ± 1 degree is permitted.

DEVICE AND SYSTEM SECURITY

Before installing this product ensure that the tamper seal on the packaging is present and unbroken and the product has not been tampered with since leaving the factory. Do not install this product if there are any indications of tampering. If there are any signs of tampering the product should be returned to the point of purchase.

It is the responsibility of the system owner to ensure that all system components, i.e. devices, panels, wiring etc., are adequately protected to avoid tampering of the system that could result in information disclosure, spoofing, and integrity violation.

⚠WARNING

THE LIMITATIONS OF LOW FREQUENCY HORN/STROBES

The sounder and/or strobe will not work without power. The sounder/strobe gets its power from the fire/security panel monitoring the alarm system. If power is cut off for any reason, the sounder/strobe will not provide the desired audio or visual warning.

The sounder may not be heard. The loudness of the sounder meets (or exceeds) current Underwriters Laboratories' standards. Studies have shown that the low frequency sounder (520Hz) is more effective at waking individuals in sleeping spaces, especially individuals that may have recently used drugs or drinking alcoholic beverages. The sounder may not be heard if it is placed on a different floor from the person in hazard or if placed too far away to be heard over the ambient noise such as traffic, air conditioners, machinery or music appliances that may prevent alert persons from hearing the alarm. The low frequency sounder may not be heard by persons who are hearing impaired.

NOTE: Strobes must be powered continuously for sounder operation.

The signal strobe may not be seen. The electronic visual warning signal uses an extremely reliable xenon flash tube. It flashes at least once every second. The strobe must not be installed in direct sunlight or areas of high light intensity (over 60 foot candles) where the visual flash might be disregarded or not seen. The strobe may not be seen by the visually impaired.

The signal strobe may cause seizures. Individuals who have positive photoic response to visual stimuli with seizures, such as persons with epilepsy, should avoid prolonged exposure to environments in which strobe signals, including this strobe, are activated.

The signal strobe cannot operate from coded power supplies. Coded power supplies produce interrupted power. The strobe must have an uninterrupted source of power in order to operate correctly. System Sensor recommends that the sounder and signal strobe always be used in combination so that the risks from any of the above limitations are minimized.

FCC STATEMENT

System Sensor Strobes and Horn/Strobes have been tested and found to comply with the limits for a Class B digital device, pursuant to part 15 of the FCC Rules. These limits are designed to provide reasonable protection against harmful interference when the equipment is operated in a commercial environment. This equipment generates, uses, and can radiate radio frequency energy and, if not installed and used in accordance with the instruction manual, may cause harmful interference to radio communications. Operation of this equipment in a residential area is likely to cause harmful interference in which case the user will be required to correct the interference at his own expense.

This class B digital apparatus complies with Canadian ICES-003

SUPPLEMENTAL INFORMATION

For the latest Warranty information, please go to:
http://www.systemsensor.com/en-us/Documents/E56-4000.pdf

For Limitations of Fire Alarm Systems, please go to:
http://www.systemsensor.com/en-us/Documents/I56-1558.pdf

Speakers only: For the latest Important Assembly Information, please go to:
http://www.systemsensor.com/en-us/Documents/I56-6556.pdf

Warranty

Limitations of Fire Alarm Systems

Speakers Only: Assembly Information

System Sensor® is a registered trademark of Honeywell International, Inc.

©2020 System Sensor. 2/24/2020