INSTALLATION AND MAINTENANCE INSTRUCTIONS

Innovair flex™

D4120 Duct Smoke Detector
D4S Sensor Component
D4P120 Power Board Component

SYSTEM SENSOR®
3825 Ohio Avenue, St. Charles, Illinois 60174
1-800-SENSOR2, FAX: 630-377-6495
www.systemsensor.com

NOTE: The D4120 duct detector consists of D4P120 Power Board component and the D4S Sensor component.

SPECIFICATIONS

Operating Temperature:	D4120 & D4S: –4° to 158° F (–20° to 70° C) D4P120: –40° to 158° F (–40° to 70° C)
Storage Temperature:	D4120 & D4S: –22° to 158° F (–30° to 70° C) D4P120: –40° to 158° F (–40° to 70° C)
Humidity:	0% to 95% Relative Humidity Non-condensing
Air Velocity:	100 to 4000 ft./min. (0.5 to 20.3 m/sec.)
D4120 Footprint Dimensions:	Rectangular - 14.38 in L x 5 in W x 2.5 in D (37cm L x 12.7cm W x 6.36cm D) Square - 7.75 in L x 9 in W x 2.5 in D (19.7cm L x 22.9cm W x 6.35cm D)
D4S/D4P120 Footprint Dimensions:	7.75 in L x 5 in W x 2.5 in D (19.7cm L x 12.7cm W x 6.35cm D)
D4120 Weight:	2.5 pounds; 1.14 kg

Electrical

Power supply voltage:	20-29 VDC	24 VAC 50-60-Hz	120 VAC 50-60 Hz
Input capacitance:	270 µF max.	270 µF max.	N/A
Reset Voltage:	3.0 VDC min.	2.0 VAC min.	10 VAC min.
Reset Time (with RTS451):	.03 to 0.3 sec.	.03 to 0.3 sec.	.03 to 0.3 sec.
Reset Time (by power down):	0.6 sec. max.	0.6 sec. max.	0.6 sec. max.
Power Up Time:	35 sec. max.	35 sec. max.	35 sec. max.
Alarm response time:	15 sec.	15 sec.	15 sec.
Sensitivity Test:	See detector label	See detector label	See detector label

Current Requirements (Using No Accessories)

Max. standby current	21 mA @ 24 VDC	65 mA RMS @ 24VAC 60Hz	20 mA RMS @ 120 VAC 60 Hz
Max. alarm current	65 mA @ 24 VDC	135 mA RMS @ 24 VAC 60 Hz	35 mA RMS @ 120 VAC 60 Hz

CONTACT RATINGS

Alarm initiation contacts (SPST)	2.0A @ 30 VDC (resistive)
Alarm auxiliary contatcs (DPDT)	10A @30 VDC (resistive) 10A @250 VAC (resistive) 1/2 HP @240 VAC 1/4 HP @120 VAC
NOTE: Alarm auxiliary contacts shall not be connected to initiating circuits of control panels. Use the alarm initiation contact for this purpose.	
Supervisory Contacts (SPDT)	2.0A @ 30 VDC (resistive) 2.0A @ 125 VAC (resistive)

ACCESSORY CURRENT LOADS AT 24 VDC

DEVICE	STANDBY	TROUBLE	ALARM
APA151/APA451	12.5mA	n/a	30mA Max.
MHR/MHW	0mA	n/a	29mA Max.
RA400Z	0mA	n/a	12mA Max.
RTS451	0mA	n/a	12mA Max.
RTS451KEY	12mA	n/a	12mA Max.
SSK451	8mA Max.	16mA Max.	40mA Max.

NOTE: Any combination of accessories may be used such that the given accessory loads are: 110mA or less at the Aux output, and 50mA or less at the Alarm output.

TABLE OF CONTENTS **PAGE**

[1] Limitations of Duct Smoke Detectors 1
[2] Exploded View of Duct Smoke Detector Components 2
[3] General Description 2
[4] Contents of Duct Smoke Detector Kit. 2
[5] Detector Installation 2
[6] Sampling Tube Installation 3
[7] Measurement Tests 3
[8] Field Wiring Installation Guidelines. 4
[9] Unit Configuration 5
[10] Detector Status Indication 6
[11] Interconnection (Multiple Fan Shut Down) 6
[12] Verification of Operation 6
[13] Detector Cleaning Procedures 7
[14] Sensor replacement. 7
[15] Optional Accessories 7
Wiring Diagrams 5-7
Warranty 8

BEFORE INSTALLING

Read the System Sensor *Guide for Proper Use of Smoke Detectors in Duct Applications* (A05-1004), which provides information on detector spacing, placement, zoning, wiring, and special applications. This manual is available online at www.systemsensor.com. NFPA Standards 72 and 90A should also be referenced for detailed information.

NOTICE: This manual shall be left with the owner/user of this equipment.

IMPORTANT: This detector must be tested and maintained regularly following NFPA 72 requirements. The detector should be cleaned at least once a year.

[1] LIMITATIONS OF DUCT SMOKE DETECTORS

⚠WARNING

The National Fire Protection Association has established that DUCT DETECTORS MUST NOT BE USED AS A SUBSTITUTE FOR OPEN AREA DETECTOR PROTECTION as a means of providing life safety. Nor are they a substitute for early warning in a building's regular fire detection system.

System Sensor supports this position and strongly recommends that the user read NFPA Standards 90A, 72, and 101. The D4120 Air Duct Smoke Detectors are listed per UL 268A.

This device will not operate without electrical power. Fire situations may cause an interruption of power. The system safeguards should be discussed with your local fire protection specialist.

This device will not sense smoke unless the ventilation system is operating and the cover is installed.

For this detector to function properly, it MUST be installed according to the instructions in this manual. Furthermore, the detector MUST be operated within ALL electrical and environmental specifications listed in this manual. Failure to comply with these requirements may prevent the detector from activating when smoke is present in the air duct.

[2] FIGURE 1. EXPLODED VIEW OF DUCT SMOKE DETECTOR COMPONENTS:

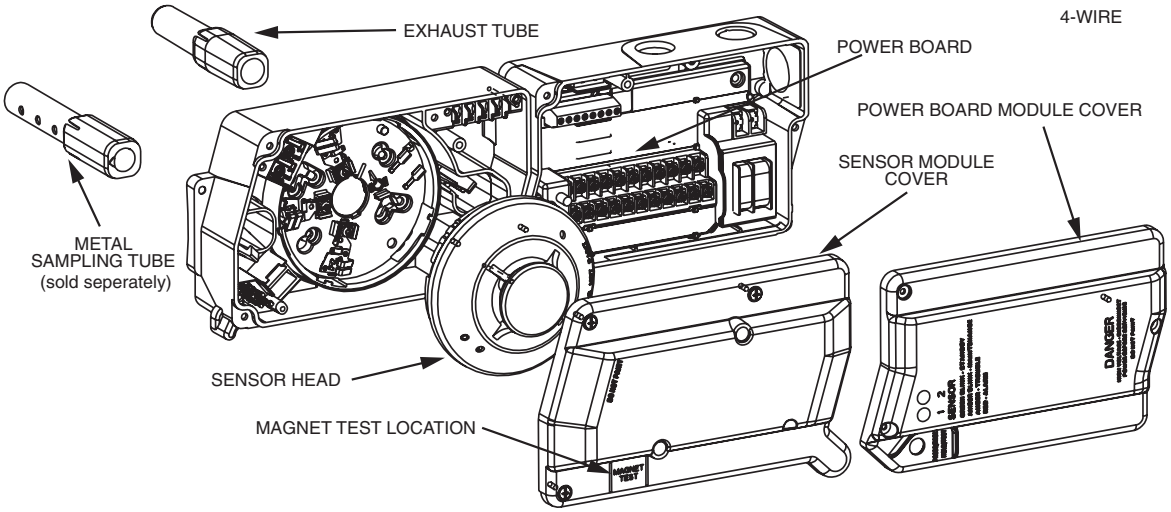

[3] GENERAL DESCRIPTION

Smoke introduced into an air duct system will be distributed throughout the entire building. Smoke detectors designed for use in air duct systems are used to sense the presence of smoke in the duct.

Model D4120 and D4S Duct Smoke Detectors utilize 4-wire photoelectric technology for the detection of smoke. This detection method, when combined with an efficient housing, samples air passing through the duct allowing detection of a developing hazardous condition. When sufficient smoke is sensed, an alarm signal is initiated and appropriate action can be taken to shut off fans, blowers, change over air handling systems, etc. These actions can facilitate the management of toxic smoke and fire gases throughout the areas served by the duct system.

The D4120 and D4P120 detectors are designed to operate on 24 VDC/VAC or 120 VAC. Alarm and supervisory relay contacts are available for control panel interface (alarm initiation), HVAC control, and other auxiliary functions. Auxiliary relays are provided for fan shut down. Detector interconnection provides signaling of up to 50 other detectors in the loop for multiple fan shut down. These detectors are not designed for 2-wire applications.

[3.1] DETECTOR FEATURE SET

-Utilizes 2D51 plug-in head

-2 sensors to 1 power board capability

-Cover missing signal

-Sampling tubes install from front or rear of detector

-Compatible with existing accessories

[4] CONTENTS OF THE DUCT SMOKE DETECTOR KIT

1. Sensor/power board assembly and cover(s)
2. Three #10 sheet metal screws for mounting
3. One test magnet
4. Drilling template
5. One sampling tube end cap
6. One plastic exhaust tube

NOTE: A sampling tube must be ordered to complete the installation. It must be the correct length for the width of the duct where it will be installed. See Table 1 on page 3 to determine the inlet tube required for different duct widths.

[5] DETECTOR INSTALLATION

[5.1] VERIFY AIR FLOW DIRECTION AND VELOCITY

Model D4120 detectors are designed to be used in air handling systems with air velocities of 100 to 4000 feet per minute. Duct widths from 6 inches to 12 feet can be accommodated. Be sure to check engineering specifications to ensure that the air velocity in the duct falls within these parameters. If necessary, use a velocity meter (anemometer) to check the air velocity in the duct.

[5.2] DETERMINE MOUNTING LOCATION AND CONFIGURATION

On ducts wider than 18 inches it is recommended that the detector be mounted downstream of a bend, obstruction in the duct, or the supply or return air inlet.

Exception: Installation of duct detectors can be on or within a commercial packaged rooftop heating and air-conditioning system, fire/smoke dampers and economizers. They may be mounted in either the supply and/or return air section as determined by local code.

Once a suitable location is selected, determine if the detector is to be mounted in a side-by-side "rectangular" configuration or a top-over-bottom "square" configuration as shown in **Figure 2**. If mounting in the square configuration, remove the rear attachment screw, rotate the unit at the hinge, and replace the screw into the new attachment hole as shown in **Figure 2**. Do NOT remove the hinge screw during this process. Final installation approval shall be based upon passing section 7.2.2 and/or 8.2.4 tests.

FIGURE 2:

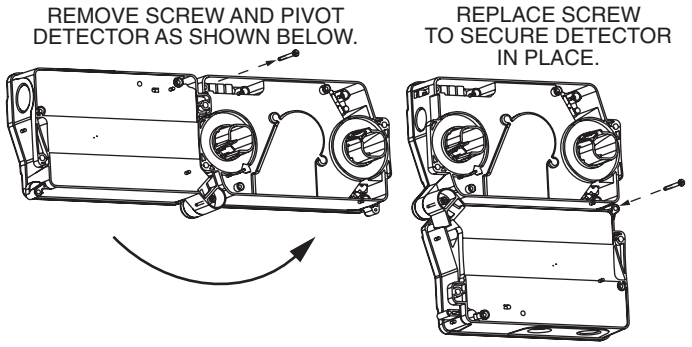

[5.3] DRILL THE MOUNTING HOLES

Remove the paper backing from the mounting template supplied. Affix the template to the duct at the desired mounting location. Make sure the template lies flat and smooth on the duct.

[5.3.1] FOR RECTANGULAR SIDE-BY-SIDE MOUNTING CONFIGURATION:

Center punch at (4) target centers: (2) "A" for sampling tubes and (2) "B" for the rectangular configuration mounting tabs as shown on mounting template. Drill pilot holes at target "A" centers and cut two 1.375 inch diameter holes using a $1^3/_8$ inch hole saw or punch. Drill .156 inch diameter holes using a $^5/_{32}$ inch drill at target "B" centers.

[5.3.2] FOR SQUARE TOP-OVER-BOTTOM MOUNTING CONFIGURATION OR D4S SENSOR COMPONENT MOUNTING:

Center punch at (4) target centers: (2) "A" for sampling tubes and (2) "C" for the square configuration mounting tabs as shown on mounting template. Drill pilot holes at target "A" centers and cut two 1.375 inch diameter holes using a $1^3/_8$ inch hole saw or punch. Drill .156 inch diameter holes using a $^5/_{32}$ inch drill at target "C" centers. If desired, drill an additional .156 inch hole at the location of one of the mounting tabs on the lower housing.

[5.4] SECURE THE DUCT DETECTOR TO THE DUCT

Use two (rectangular configuration) or three (square configuration) of the provided sheet metal screws to screw the duct detector to the duct.

CAUTION: Do not overtighten the screws.

[6] SAMPLING TUBE INSTALLATION

[6.1] SAMPLING TUBE SELECTION

The sampling tube must be purchased separately. Order the correct length, as specified in **Table 1**, for width of the duct where it will be installed. It is recommended that the sampling tube length extend at least $^2/_3$ across the duct width for optimal performance.

TABLE 1. SAMPLING TUBES RECOMMENDED FOR DIFFERENT DUCT WIDTHS:

Outside Duct Width	Sampling Tube Recommended*
Up to 1 ft.	DST1
1 to 2 ft.	DST1.5
2 to 4 ft.	DST3
4 to 8 ft.	DST5
8 to 12 ft.	DST10 (2-piece)

*Must extend a minimum of $^2/_3$ the duct width. These sampling tubes can only be used with new InnovairFlex duct smoke detectors.

The sampling tube is always installed with the air inlet holes facing into the air flow. To assist proper installation, the tube's connector is marked with an arrow. Make sure the sampling tube is mounted so that the arrow points into the airflow as shown in **Figure 3**. Mounting the detector housing in a vertical orientation is acceptable provided that the air flows directly into the sampling tube holes as indicated in **Figure 3**. The sampling tube and exhaust tube can be mounted in either housing connection as long as the exhaust tube is mounted downstream from the sampling tube.

FIGURE 3. AIR DUCT DETECTOR SAMPLING TUBE:

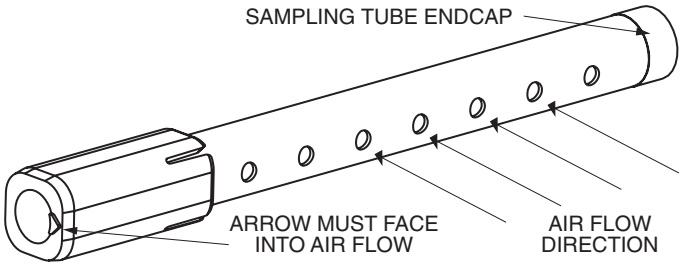

H0551-00

CAUTION: The sampling tube end cap, included with the detector, is critical to proper operation of the duct smoke detector. The end cap is needed to create the proper air flow to the sensor of the duct smoke detector. Once any sampling tube length adjustments are made, plug the end of the sampling tube with the provided end cap.

A plastic exhaust tube is included with the unit to be installed if needed. Install into the housing connection that is downstream from the sampling tube connection. The exhaust tube can be installed from the front or back of the detector. A longer 1 foot exhaust tube, model ETX, is available as an accessory in cases where the molded exhaust tube does not extend at least 2 inches into the duct.

[6.2] SAMPLING TUBE INSTALLATION

1. For tubes shorter than the width of the duct, slide the sampling tube, with installed end cap, into the housing connection that meets the airflow first. Position the tube so the arrow points into the airflow as shown in **Figure 3**. Per NFPA sampling tubes over 3 feet long should be supported at the end opposite the duct detector. In ducts wider than 8 feet, work must be performed inside the duct to couple the other section of the sampling tube to the section already installed using the $^1/_2$ inch conduit fitting. Make sure that the holes on both sections of the air inlet sampling tube are lined up and facing into the airflow.
2. For tubes longer than the width of the duct, the tube should extend out of the opposite side of the duct. Drill a $^3/_4$ inch hole in the duct opposite the hole already cut for the sampling tube. Ensure that the sampling tube is angled downward from the duct smoke detector to allow for moisture drainage away from the detector. The sampling tube should be angled at least 1/4" downward for every 12" of duct width per Figure 4. There should be 10 to 12 holes spaced as evenly as possible across the width of the duct. If there are more than 2 holes in the section of the tube extending out of the duct, select a shorter tube using **Table 1**. Otherwise, trim the tube to leave approximately 1 to 2 inches extending outside the duct. Plug the end with the end cap and tape closed any holes in the protruding section of tube. Be sure to seal the duct where the tube protrudes.

FIGURE 4.

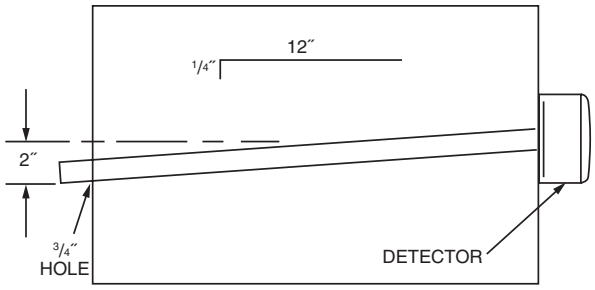

H0215-00

NOTE: Air currents inside the duct may cause excessive vibration, especially when the longer sampling tubes are used. In these cases, a 3 inch floor flange (available at most plumbing supply stores) may be used to fasten the sampling tube to the other side of the duct. When using the flange/connector mounting technique, drill a 1 to $1^1/_4$ inch hole where the flange will be used.

[6.3] MODIFICATIONS OF SAMPLING TUBES

There may be applications where duct widths are not what is specified for the installation. In such cases, it is permissible to modify a sampling tube that is longer than necessary to span the duct width.

Use a 0.193 inch diameter (#10) drill and add the appropriate number of holes so that the total number of holes exposed to the air flow in the duct is 10 to 12. Space the additional holes as evenly as possible over the length of the tube.

NOTE: This procedure should only be used as a temporary fix and is not intended as a substitute for ordering the correct length tubes.

[6.4] REMOTE SAMPLING TUBE INSTALLATION

The detector arrangement can also incorporate remote mounting of the sampling tube and/or exhaust tube. In this case both the detector, sampling tube and exhaust tube (if included) should be rigidly mounted to withstand the pressure and vibrations caused by the air velocity. The location of the detector's sampling tube should be such that there is uniform airflow in the cross section area.

The pressure differential across the sampling and exhaust ports in the detector housing shall be verified to be between 0.01 and 1.11 inches of water. Do so by measuring the pressure difference between the inlet and outlet ports on the detector housing using a manometer as described in **Section 7.1**.

[7] MEASUREMENT TESTS

[7.1] AIR FLOW

The D4120 is designed to operate over an extended air speed range of 100 to 4000 FPM. To verify sufficient sampling of ducted air, turn the air handler on and use a manometer to measure the differential pressure between the two sampling tubes. The differential pressure should measure at least 0.01 inches of water and no more than 1.11 inches of water. Because most commercially available manometers cannot accurately measure very low pressure differentials, applications with less than 500 FPM of air speed may require one of the following: 1) the use of a current-sourcing pressure transmitter (Dwyer Series 607) per Section 7.2, or 2) the use of aerosol smoke per section 12.5.3.

[7.2] LOW FLOW AIR FLOW TEST USING DWYER SERIES 607 DIFFERENTIAL PRESSURE TRANSMITTER

Verify the air speed of the duct using an anemometer. Air speed must be at least 100 FPM. Wire the Dwyer transmitter as shown in **Figure 5**. Connect the leads of the meter to either side of the 1000Ω resistor. Allow unit to warm up for 15 seconds. With both HIGH and LOW pressure ports open to ambient air, measure and record the voltage drop across the 1000Ω resistor (measurement 1), 4.00 volts is typical. Using flexible tubing and rubber stoppers, connect the HIGH side of the transmitter to the sampling tube of the duct smoke detector housing, and the LOW side of the transmitter to the exhaust tube of the duct smoke detector housing. Measure and record the voltage drop across the 1000Ω resistor (measurement 2). Subtract the voltage recorded in measurement 1 from the voltage recorded in measurement 2. If the difference is greater than 0.15 volts, there is enough air flow through the duct smoke detector for proper operation.

FIGURE 5. PROCEDURE FOR VERIFYING AIR FLOW LESS THAN 500 FPM:

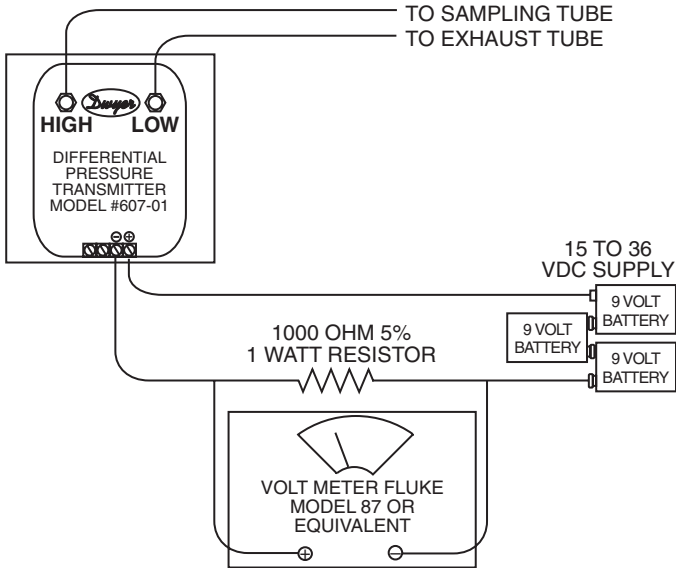

H0163-01

[8] FIELD WIRING INSTALLATION GUIDELINES

All wiring must be installed in compliance with the National Electrical Code and the local codes having jurisdiction. Proper wire gauges should be used. The conductors used to connect smoke detectors to control panels and accessory devices should be color-coded to prevent wiring mistakes. Improper connections can prevent a system from responding properly in the event of a fire.

For signal wiring, (wiring between interconnected detectors or from detectors to auxiliary devices), it is recommended that single conductor wire be no smaller than 18 gauge.

Smoke detectors and alarm system control panels have specifications for allowable loop resistance. Consult the control panel manufacturer's specifications for the total loop resistance allowed for the particular control panel being used before wiring the detector loop.

[8.1] WIRING INSTRUCTIONS

The D4120 and D4P120 detectors are designed for easy wiring. The housing provides a terminal strip with clamping plates. The D4S housing provides 4 wiring terminals with clamping plates. Wiring connections are made by sliding the bare end of the wire under the plate, and tightening the clamping plate screw. See **Figure 7** on page 5 for system wiring.

[8.2] SENSOR 2 INSTALLATION/WIRING

The power board is capable of controlling a second housed sensor. The second sensor, model D4S, can be wired to the power board per the following:

1. Connect wires to the four wire terminals in the corner of the D4S sensor housing designated as Tamper (Y,Y), +R, and –B. Route wires through the conduit openings in the sensor housing and D4120 power board housing.
2. Connect the opposing ends of the wires to the terminal connections marked "Sensor 2" on the Power board. See **Figure 6** for reference. Ensure that wires are connected to the appropriate terminal locations. A No. 0 or 1 phillips screwdriver should be used for terminal connection. The tamper terminals are not polarity sensitive.
3. Adjust the middle dip switch on the power board to indicate (2) sensors as shown in **Figure 6**.
4. The D4S can only be used with new InnovairFlex models and is not compatible with previously sold detectors.

FIGURE 6. OPTIONAL SENSOR 2 CONFIGURATION AND WIRING:

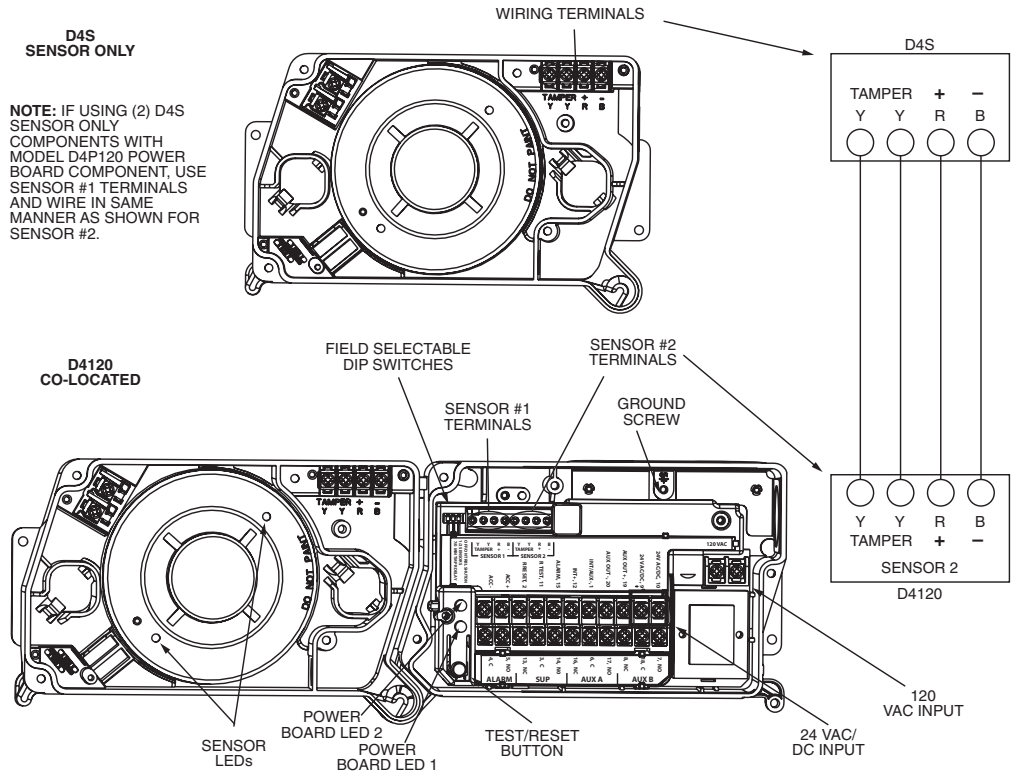

H0557-01

FIGURE 7. SYSTEM WIRING DIAGRAM FOR 4-WIRE DUCT SMOKE DETECTORS:

⚠CAUTION

Do not loop wire under terminals when wiring detectors. Break wire runs to provide system supervision of connections.

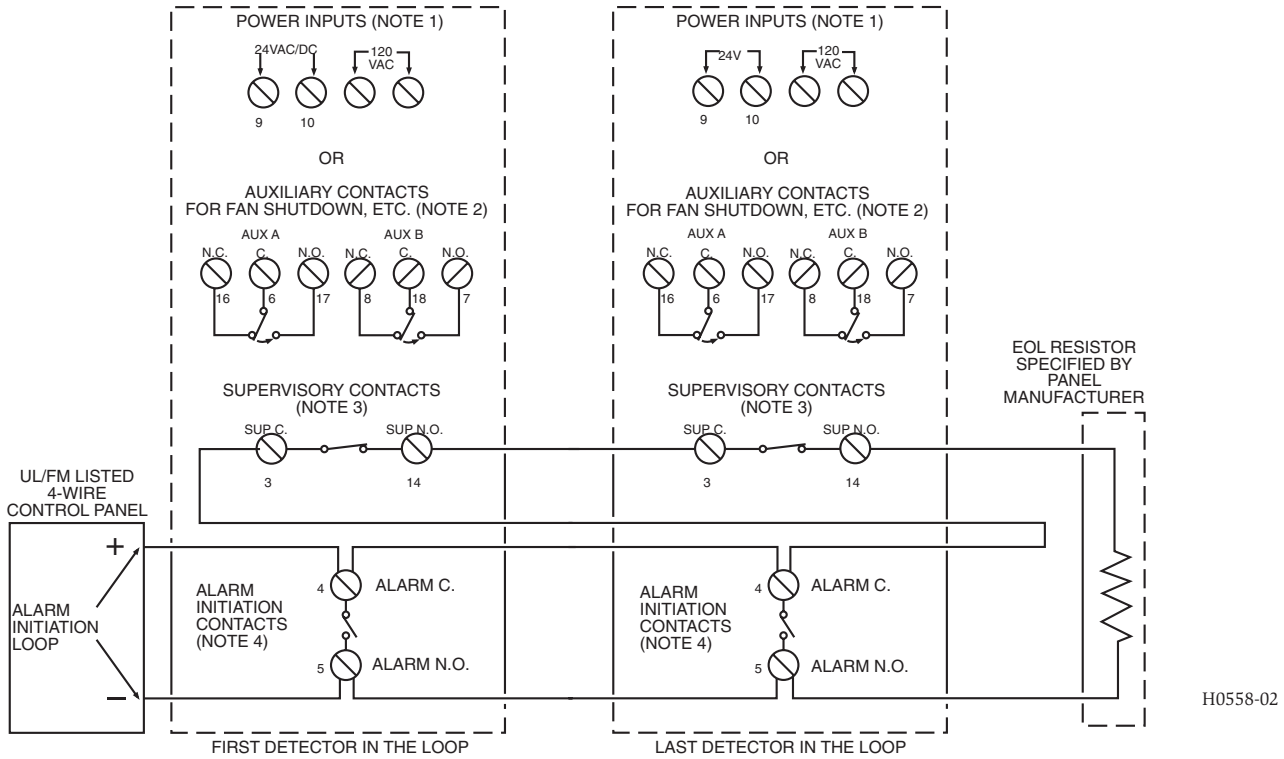

NOTE 1: 24V Power Inputs accept a non-polarized 24VDC or 24VAC 50-60Hz. 120VAC Power Inputs accept only 120VAC 50-60Hz. Connect power source to appropriate terminals of each detector. See specifications for additional power supply information.

NOTE 2: Auxiliary contacts shown in standby position. Contacts switch during alarm as indicated by arrows. Auxiliary contacts are not to be used for connection to the control panel. See specifications for contact ratings.

NOTE 3: Supervisory contacts shown in standby position. Open contacts indicate a trouble condition to the panel. See specifications for contact ratings.

NOTE 4: Alarm Initiation contacts shown in standby position. Closed contacts indicate an alarm condition to the panel. See specifications for contact ratings.

[9] UNIT CONFIGURATION:

A three position Dip Switch is included only on the D4P120 in order to configure the setup of the unit. One switch is used to determine it there are one or two sensors connected to the Power Board. The second switch selects an instantaneous or 7-minute tamper Delay. A tamper Condition indicates that the cover of the sesor Housing has been removed or has not been secured properly. The third switch is used to turn the Shutdown On Trouble feature on or off. With this feature turned On, the Aux relay will switch states when a Trouble Condition occurs.

***Trouble is indicated when the Supervisory Relay, switches state-Terminals 3 and 14 are open in a Trouble Condition**

Causes of a Trouble Condition may be:

- Unit loses Power
- Cover Tamper Feature times out
- Wiring Problems between the Sensor and the Power Board
- Mismatch between number of sensors connected to the Power Board and the Dipswitch setting

TABLE 2. DIP SWITCH SETTINGS:

Designation	Default	Selection	Features
TRBL SHUTDN	OFF	OFF	Aux relay does not switch states with a Trouble condition
		ON	Aux relay switches states with a Trouble condition
SENSORS	1	1	Only one sensor is connected the Power Board
		2	Two sensors are connected to the Power Board
MIN TMPR DELAY	7	7	Provides a Trouble condition (terminals 3 and 14 open) when Sensor Housing cover has been removed or has been secured improperly for more than 7 minutes
		0	Provides an instantaneous Trouble condition(terminals 3 and 14 open) upon cover removal

[10] DETECTOR STATUS INDICATION

Detector Staus is indicated by the LED sensor, and the correcsponding LED on the power board. The power board has two separate LED's to indicate the status of each sensor connected to it. Refer to Table 3 on page 8 for more details.

[11] INTERCONNECTION (MULTIPLE FAN SHUT DOWN)

When using the interconnect feature, an alarm from an initiating device will switch the Aux Relays on the other devices interconnected.

FIGURE 8. MULTIPLE FAN SHUTDOWN (INTERCONNECTION OF D4120'S):

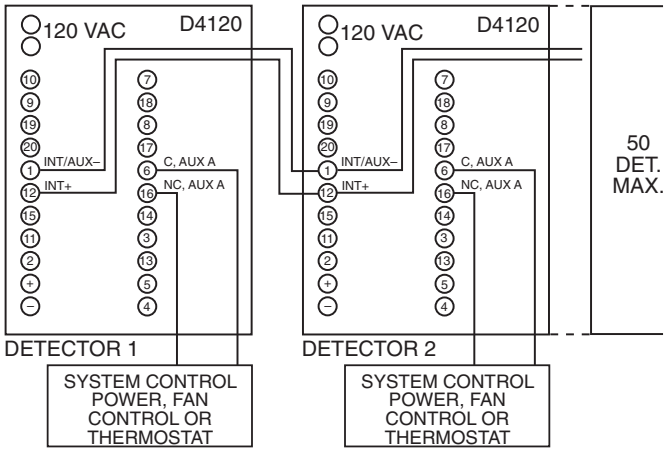

H0552-00

FIGURE 9. MULTIPLE FAN SHUTDOWN (INTERCONNECTION OF D4120 TO DH100ACDC):

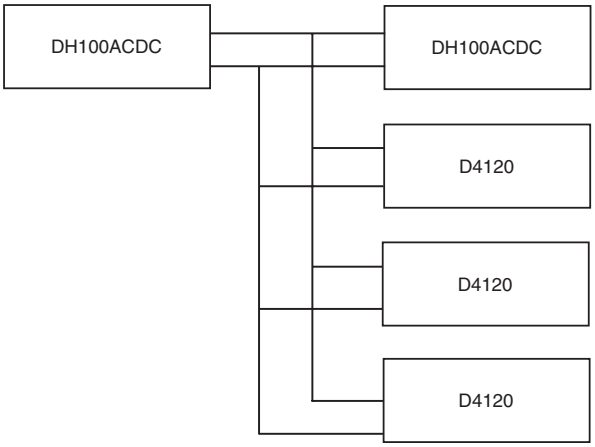

H0617-00

[11.1] IMPORTANT INTERCONNECTION NOTES:

- When using the interconnect feature, all interconnected units must be powered using the same independent supply.
- Polarity must be maintained throughout the interconnect wiring. Connect the INT+ terminal on unit 1 to the INT+ terminal on unit 2 and so on. Similarly, connect the INT/AUX- terminal on unit 1 to the INT/AUX- terminal on unit 2 and so on.
- Up to 50 D4120 units may be interconnected.
- Up to 10 DH100ACDC units may be interconnected. Please note that each of the 9 DH100ACDC units interconnected can be substituted by three D4P120 units. Therefore, when using the interconnect feature a single DH100ACDC can drive either 9 DH100ACDC's or 27 D4120 units.

NOTE: Alarm can be reset only at the initiating device and not at the devices interconnected.

[12] VERIFICATION OF OPERATION

[12.1] FIELD SELECTABLE SETTINGS

Verify dip switch settings as per Table 2 on Page 5.

[12.2] POWERING THE UNIT

Apply 24 VDC power to 9 and 10 terminals on the D4P120 or apply 120 VAC on terminals named 120VAC. See Figure 7 and electrical specifications for details.

[12.3] PERFORM DETECTOR CHECK

VERIFY STANDBY AND TROUBLE TEST per Table 3 on page 8. The use of a remote accessory for visible indication of power and alarm is recommended.

NOTE: If an instantaneous tamper delay is selected a trouble may be indicated with the cover installed.

[12.4] SENSITIVITY VERIFICATION

The sensitivity of the sensor is confirmed to be operating within its allowable range each time the sensor and power board LEDs blink green every 5 seconds. Note in a maintenance condition the sensor LEDs will blink red every 5 seconds and power board will blink amber as depicted in **Table 3** on page 8. The maintenance condition indicates that the sensor is operating outside its original factory preset sensitivity and shall be cleaned or replaced. See Section 9 for reference. This is a valid UL test.

[12.5] DETECTOR CLEANING PROCEDURES

Notify the proper authorities that the smoke detector system is undergoing maintenance, and that the system will temporarily be out of service. Disable the zone or system undergoing maintenance to prevent unwanted alarms and possible dispatch of the fire department.

[12.5.1] ALARM TESTS

1a. Test/Reset Button - Press and hold the test button located on the power board cover for at least 2 seconds.

OR

1b. M02-04-00 Magnet Test - Place the painted surface of the magnet onto the MAGNET TEST location on the sensor cover of unit (Figure 1).

OR

1c. Remote Test Accessory - See list on page 1.

The red alarm LED on the sensor and the power board should latch on, as should any accessories (i.e. RA400Z, RTS451). Verify system control panel alarm status and control panel execution of all intended auxiliary functions (i.e fan shutdown, damper control, etc.).

2. The detector must be reset by the system control panel, front cover Test/Reset button, or remote accessory.
3. To reset using the Test/Reset button on the power board cover simply Press and release.
4. Verify airflow test per Section 7 has been performed.

[12.5.2] SMOKE RESPONSE TESTS

To determine if smoke is capable of entering the sensing chamber, visually identify any obstructions. Plug the exhaust and sampling tube holes to prevent ducted air from carrying smoke away from the detector head, then blow smoke such as cigarette, cotton wick, or punk directly at the head to cause an alarm. REMEMBER TO REMOVE THE PLUGS AFTER THIS TEST, OR THE DETECTOR WILL NOT FUNCTION PROPERLY.

[12.5.3] SMOKE ENTRY USING AEROSOL SMOKE

This test is intended for low-flow systems (100-500 FPM). If the air speed is greater than 500 FPM, use a conventional manometer to measure differential pressure between the sampling tubes, as described in Section 7.1.

Drill a ¼ inch hole 3 feet upstream from the duct smoke detector. With the air handler on, measure the air velocity with an anemometer. Air speed must be at least 100 FPM. Spray aerosol smoke* into the duct through the ¼ inch hole for five seconds. Wait two minutes for the duct smoke detector to alarm. If the duct smoke detector alarms, air is flowing through the detector. Remove the duct smoke detector cover and blow out the residual aerosol smoke from the chamber and reset the duct smoke detector. Use duct tape to seal the aerosol smoke entry hole.

*Aerosol smoke can be purchased from Home Safeguard Industries, model 25S Smoke Detector Tester, Malibu, CA. Phone: 310/457-5813 and Chekkit Smoke Detector Tester model CHEK02 and CHEK06 available from SDi. When used properly, the canned smoke agent will cause the smoke detector to go into alarm. Refer to the manufacturer's published instructions for proper use of the canned smoke agent.

⚠CAUTION

Canned aerosol simulated smoke (canned smoke agent) formulas will vary by manufacturer. Misuse or overuse to these products may have long term adverse effects on the smoke detector. Consult the canned smoke agent manufacturer's published instructions for any further warnings or caution statements.

[12.6] INSTALL THE COVER

Install the covers making sure that the cover fits into the base groove. Tighten the seven screws that are captured in the covers.

NOTE: Verify sensor cover gasket is properly seated on cover prior to cover installation.

[13] DETECTOR CLEANING PROCEDURES

Notify the proper authorities that the smoke detector system is undergoing maintenance, and that the system will temporarily be out of service. Disable the zone or system undergoing maintenance to prevent unwanted alarms and possible dispatch of the fire department.

FIGURE 10. DETECTOR SENSOR EXPLODED VIEW:

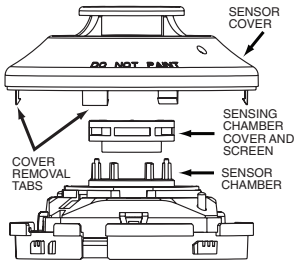

H0584-00

[13.1] DETECTOR SENSOR

1. Remove the sensor to be cleaned from the system.
2. Remove the sensor cover by pulling outward on each of the four removal tabs that hold the cover in place. See **Figure 10**.
3. Vacuum the screen carefully without removing it. If further cleaning is required continue with Step 4, otherwise skip to Step 7.
4. Remove the chamber cover/screen assembly by pulling it straight out.
5. Use a vacuum cleaner or compressed air to remove dust and debris from the sensing chamber.
6. Reinstall the chamber cover/screen assembly by sliding the edge over the sensing chamber. Turn until it is firmly in place.
7. Replace the cover using the holes for the LEDs for alignment and then gently pushing it until it locks into place.
8. Reinstall the detector.

[13.2] REINSTALLATION

1. Reinstall the detector in its housing.
2. Restore system power.
3. Perform Detector Check, Section 12.3.
4. Notify the proper authorities testing has been completed and the smoke detector system is back in operation.

[14] SENSOR REPLACEMENT (PART NO. 2D51)

1. Remove the sensor head by rotating counterclockwise.
2. Pull gently to remove it.
3. To replace the sensor head, align the mounting features and rotate clockwise into place.

[15] OPTIONAL ACCESSORIES

[15.1] RTS451/RTS451KEY REMOTE TEST STATION

The RTS451/RTS451KEY Remote Test Station facilitates test of the alarm capability of the duct smoke detector as indicated in the RTS451/RTS451KEY manual. The D4120 duct smoke detector can be reset by the RTS451/RTS451KEY. To install the RTS451/RTS451KEY, connect the device as shown in **Figure 12**; wire runs must be limited to 25 ohms or less per interconnecting wire. If a system control panel is used, the panel itself may require testing.

[15.2] SSK451 MULTI-SIGNALING ACCESSORY

The SSK451 Multi-Signaling accessory combines a sounder feature with a key activated test and reset function. Green, amber and red LEDs provide a visual indication of power, trouble, and alarm respectively. An optional strobe (PS24LOW) with a smoke lens can be added to conform to the codes of certain jurisdictions.

To install the SSK451, connect the device as shown in **Figure 14**.

FIGURE 11. WIRING DIAGRAMS FOR OPTIONAL ACCESSORIES:

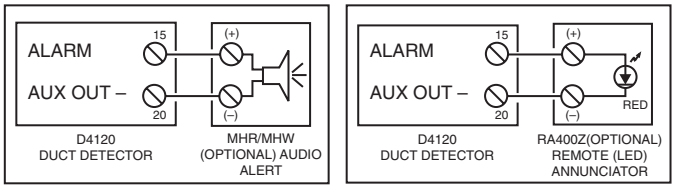

H0554-00

FIGURE 12. WIRING DIAGRAM FOR D4120 TO APA151 OR APA451:

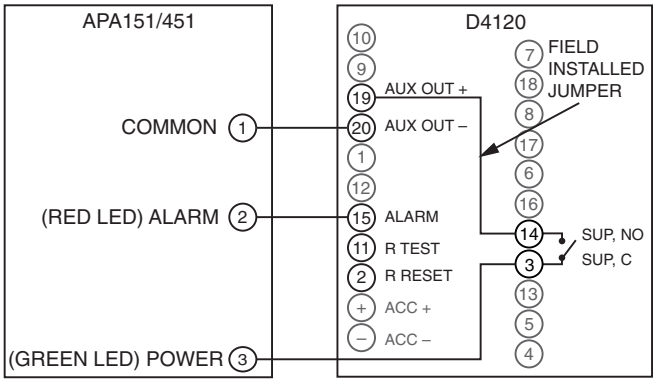

NOTE: WIRING DIAGRAM SHOWN IS FOR D4120 4-WIRE DUCT SMOKE DETECTOR SYSTEM EQUIPPED WITHOUT A CONTROL PANEL.

NOTE: A TROUBLE CONDITION IS INDICATED BY LOSS OF GREEN LED

C1009-00

FIGURE 13. WIRING DIAGRAM FOR D4120 TO RTS451/RTS451KEY:

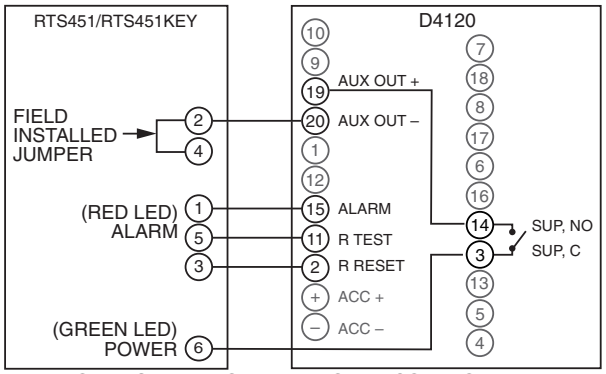

FOR RTS451KEY ONLY WITHOUT A CONTROL PANEL

H0582-00

FIGURE 14. WIRING DIAGRAM FOR D4120 TO SSK451:

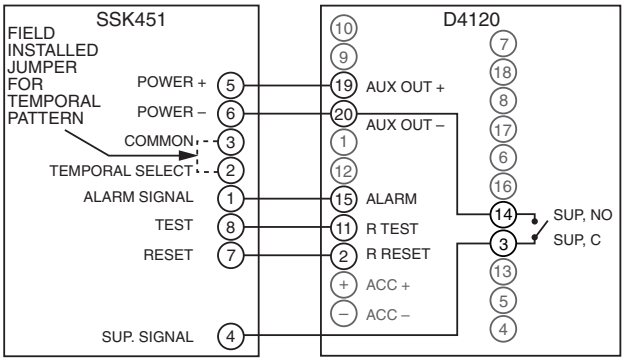

NOTE: WIRING DIAGRAM SHOWN IS FOR D4120 4-WIRE DUCT SMOKE DETECTOR SYSTEM EQUIPPED WITHOUT A CONTROL PANEL.

H0583-00

©2008 System Sensor

TABLE 3. DETECTOR STATUS INDICATION

NOTE: There are two LED's on the Power board D4P120, each indicating the Status of the two sensors connected. When there is only one sensor connected, LED2 will remain off.

Status	Description	LED Status		Status of Relays
		Sensor D4S	Power Board D4P120	
Sensor Initialization	At power-up or reset at the panel, the sensor will take approx 45 seconds to initialize. Also occurs if the sensor has been removed and restored in the base in the sensor housing.	RED Blink every 5 seconds	Alternating Green/amber every 1 second	**Supervisory relay**: Terminals 3 and 14 are open. **Alarm Relay**: Terminals 4 and 5 are open. **Aux Relay** does not switch states:Terminals 6 and 16 are closed,Terminals 8 and 18 are closed
	Sensor is missing during the seven minute tamper Delay, if selected.	Off	Alternating Green/amber every 1 second	**Supervisory relay**: Terminals 3 and 14 are closed **Alarm Relay**: Terminals 4 and 5 are open. **Aux Relay** does not switch states:Terminals 6 and 16 are closed,Terminals 8 and 18 are closed
Maintenance	Sensor D4S is outside it's UL approved sensitivity limits and needs to be cleaned or replaced.	RED Blink every 5 seconds	Amber Blink every 5 seconds	**Supervisory relay**: Terminals 3 and 14 are open. **Alarm Relay**: Terminals 4 and 5 are open. **Aux Relay** does not switch states:Terminals 6 and 16 are closed,Terminals 8 and 18 are closed
Trouble	.Unit loses Power	Off	Off	**Supervisory relay**: Terminals 3 and 14 are open. **Alarm Relay:** Terminals 4 and 5 are open. **Aux Relay** does not switch states with no shutdown on Trouble selected: Terminals 6 and 16 are closed. Terminals 8 and 18 are closed. **Aux Relay** Switches states with shutdown on Trouble selected: Terminals 6 and 16 are open, Terminals 8 and 18 are open
	.Cover Tamper Delay times out	Green Blink every 5 seconds	Amber solid	
	.Wiring Problems between the Sensor and the Power Board	Off	Amber solid	
	.Mismatch between the number of sensors connected and the Dip Switch setting			
	1 sensor connected,2 selected	Green blink every 5 seconds on first sensor. No second sensor.	LED1 Green blink every 5 seconds LED2 Amber solid	
	2 sensors connected,1 selected	Green blink every 5 seconds on first sensor. LED's off on second sensor	LED1 Green blink every 5 seconds LED2 Amber solid	
Alarm	Unit detects smoke	Solid Red	Solid Red	**Supervisory relay**: Terminals 3 and 14 are closed **Alarm Relay**: Terminals 4 and 5 are closed. **Aux Relay** switches states: Terminals 6 and 16 are open, Terminals 8 and 18 are open
Standby	Unit has Power and it is not in initialization, Trouble, Maintenance or Alarm.	Green Blink every 5 seconds	Green Blink every 5 seconds	**Supervisory relay**: Terminals 3 and 14 are closed **Alarm Relay**: Terminals 4 and 5 are open. **Aux Relay** does not switch states: Terminals 6 and 16 are closed, Terminals 8 and 18 are closed

NOTE: If any other visual indication is noted contact System Sensor technical support at 1-800-SENSOR2.

Please refer to insert for the Limitations of Fire Alarm Systems

THREE-YEAR LIMITED WARRANTY

System Sensor warrants its enclosed product to be free from defects in materials and workmanship under normal use and service for a period of three years from date of manufacture. System Sensor makes no other express warranty for the enclosed product. No agent, representative, dealer, or employee of the Company has the authority to increase or alter the obligations or limitations of this Warranty. The Company's obligation of this Warranty shall be limited to the replacement of any part of the product which is found to be defective in materials or workmanship under normal use and service during the three year period commencing with the date of manufacture. After phoning System Sensor's toll free number 800-SENSOR2 (736-7672) for a Return Authorization number, send defective units postage prepaid to: System Sensor, Returns Department, RA #_____, 3825 Ohio Avenue, St. Charles, IL 60174. Please include a note describing the malfunction and suspected cause of failure. The Company shall not be obligated to replace units which are found to be defective because of damage, unreasonable use, modifications, or alterations occurring after the date of manufacture. In no case shall the Company be liable for any consequential or incidental damages for breach of this or any other Warranty, expressed or implied whatsoever, even if the loss or damage is caused by the Company's negligence or fault. Some states do not allow the exclusion or limitation of incidental or consequential damages, so the above limitation or exclusion may not apply to you. This Warranty gives you specific legal rights, and you may also have other rights which vary from state to state.