Pro Max 48 PoE

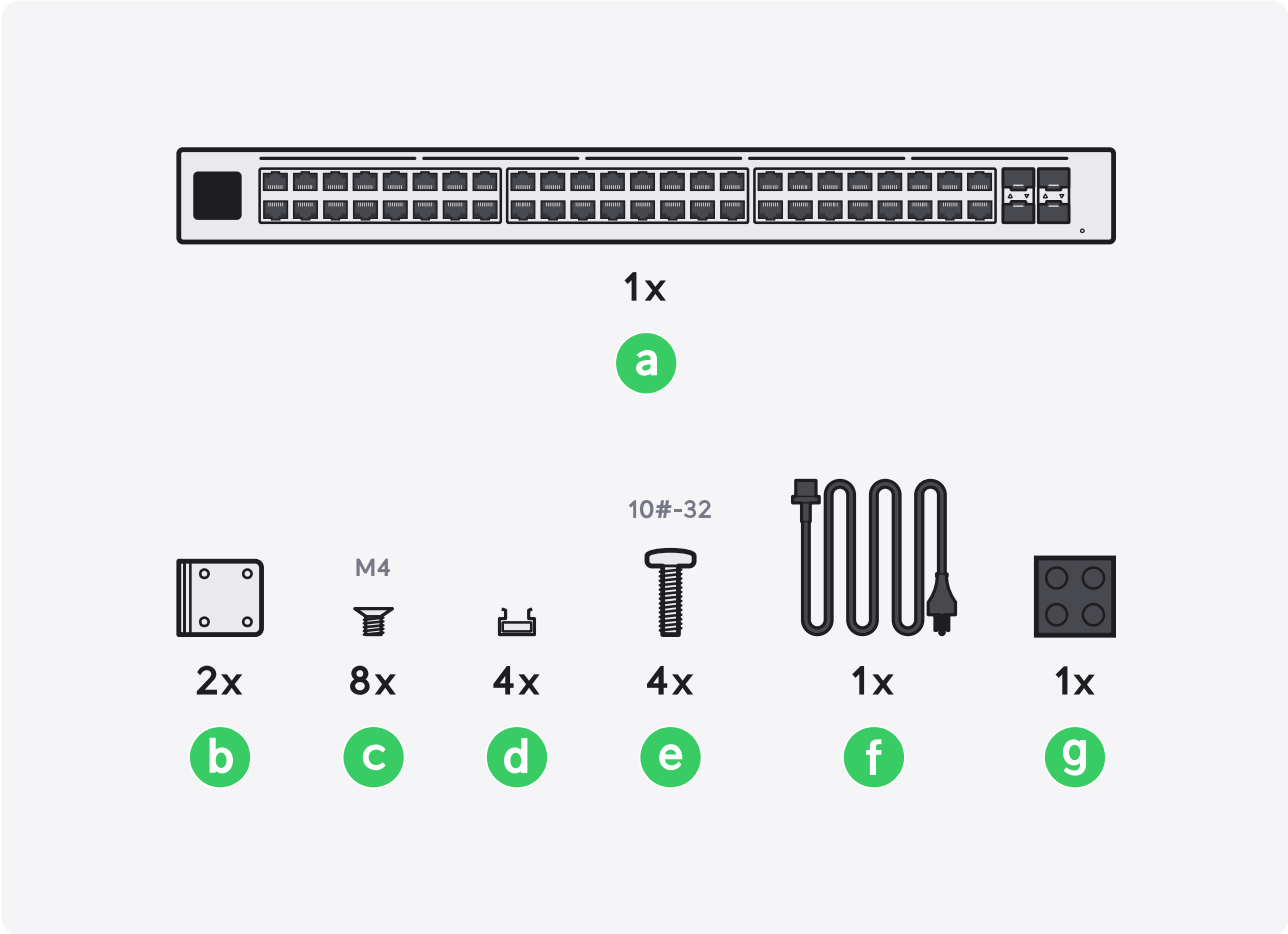
1x
a
M4
10#-32
2x
8x
4x
4x
1x
1x
b
c
d
e
f
g

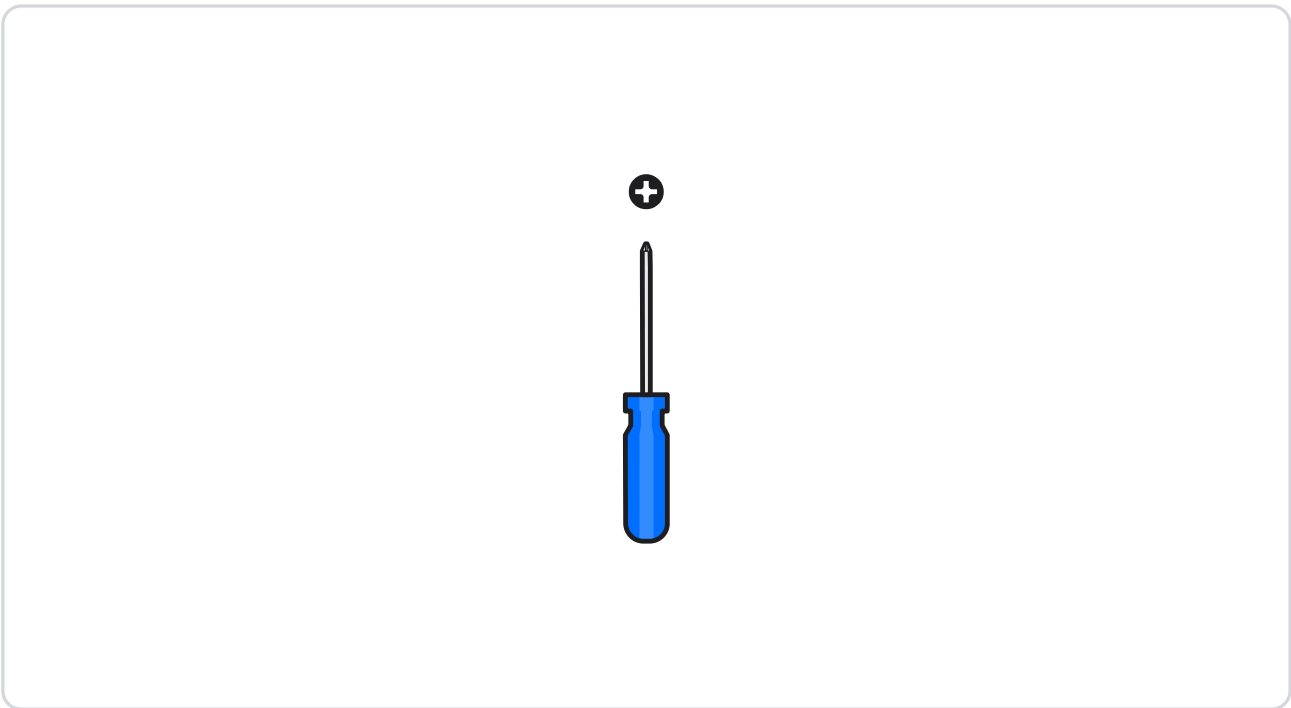

1

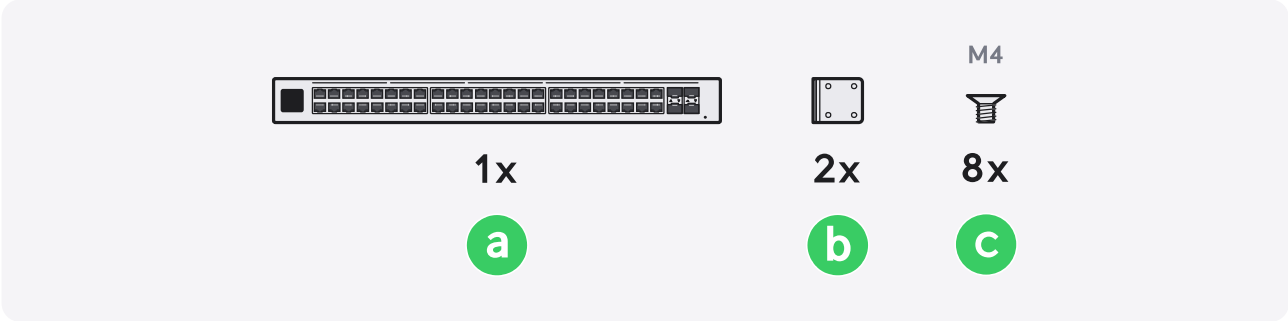

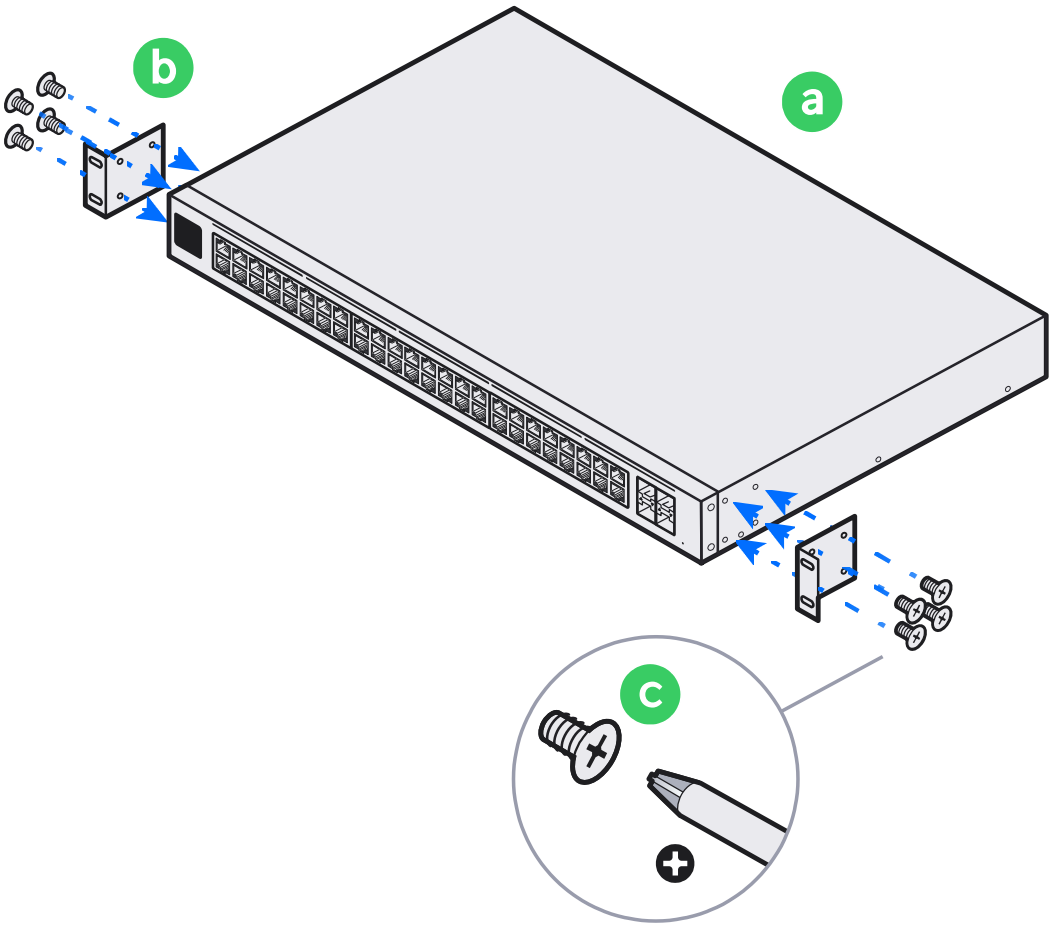

2

4x

d

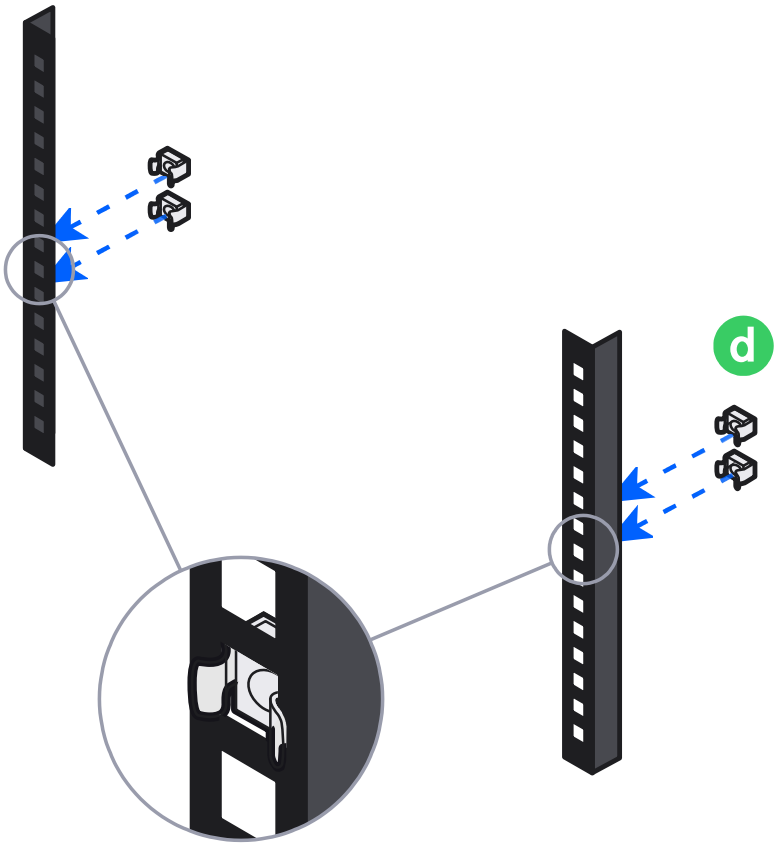

3

10#-32

4x

e

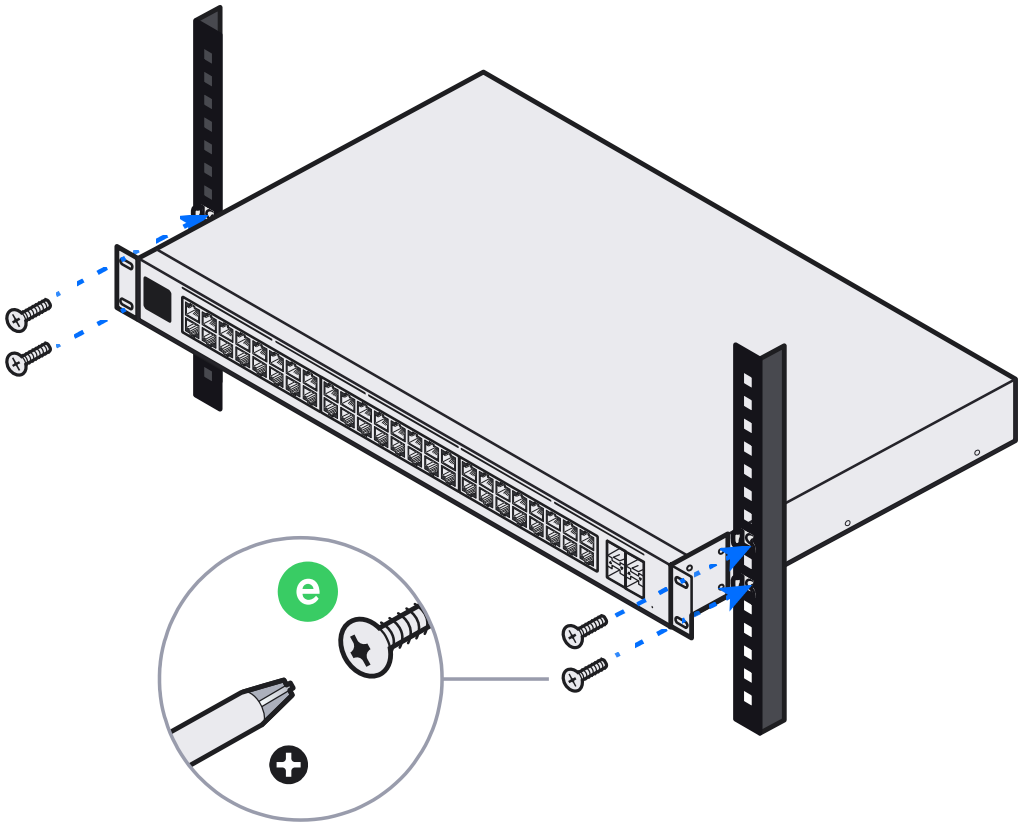

4

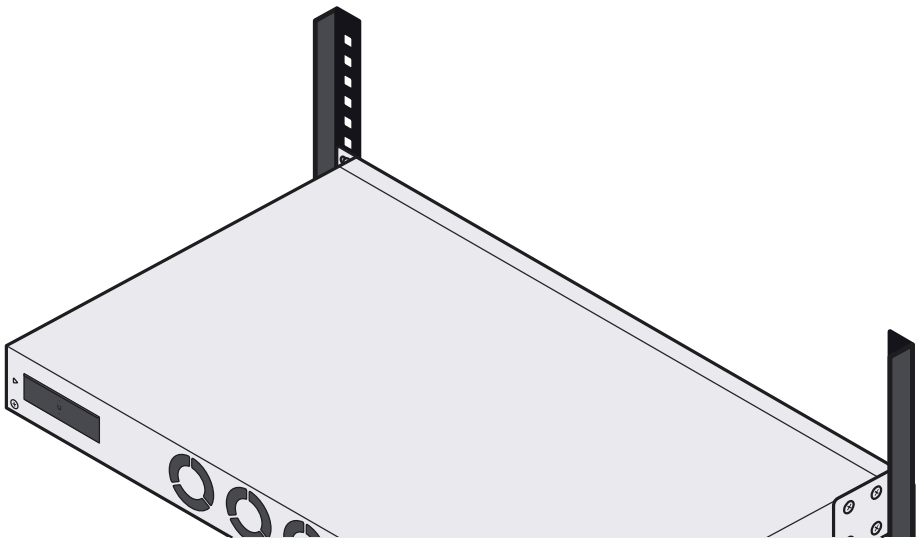

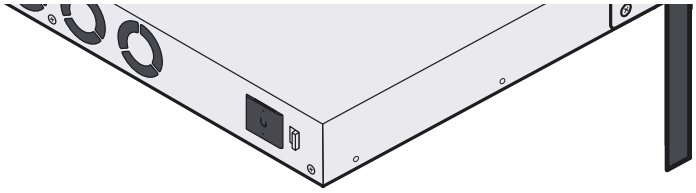

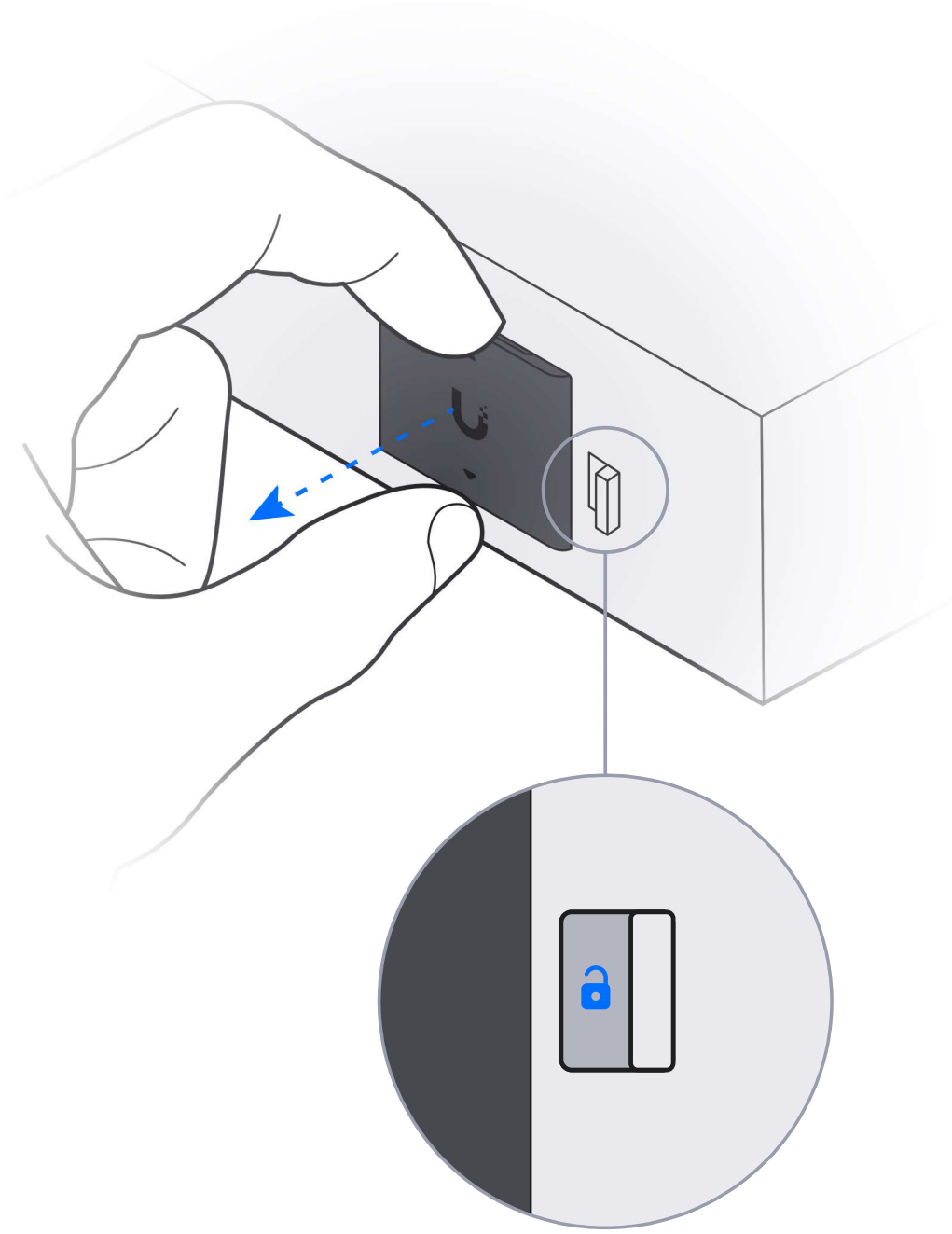

5

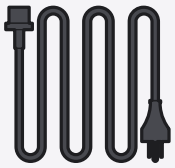

1x

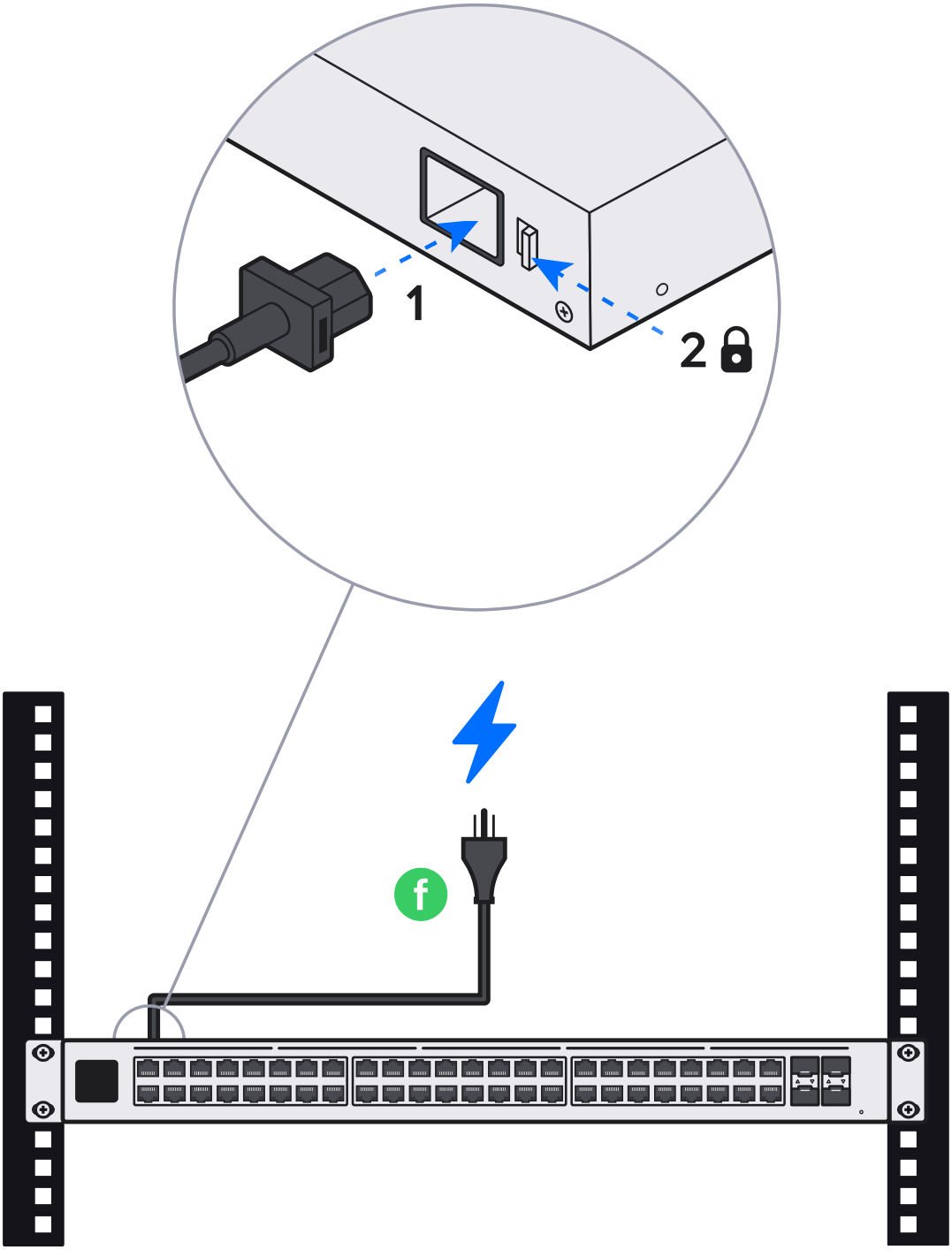

6

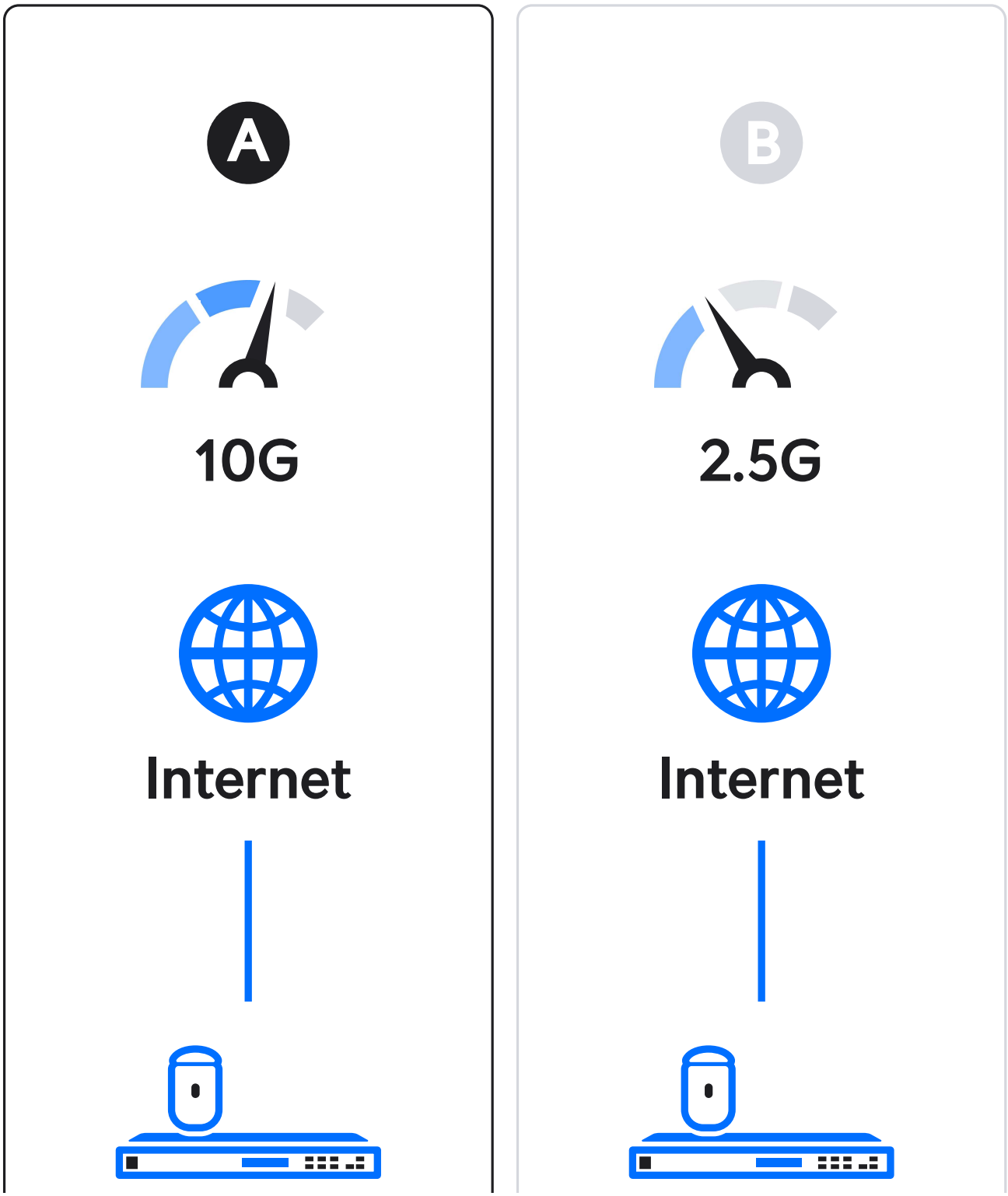

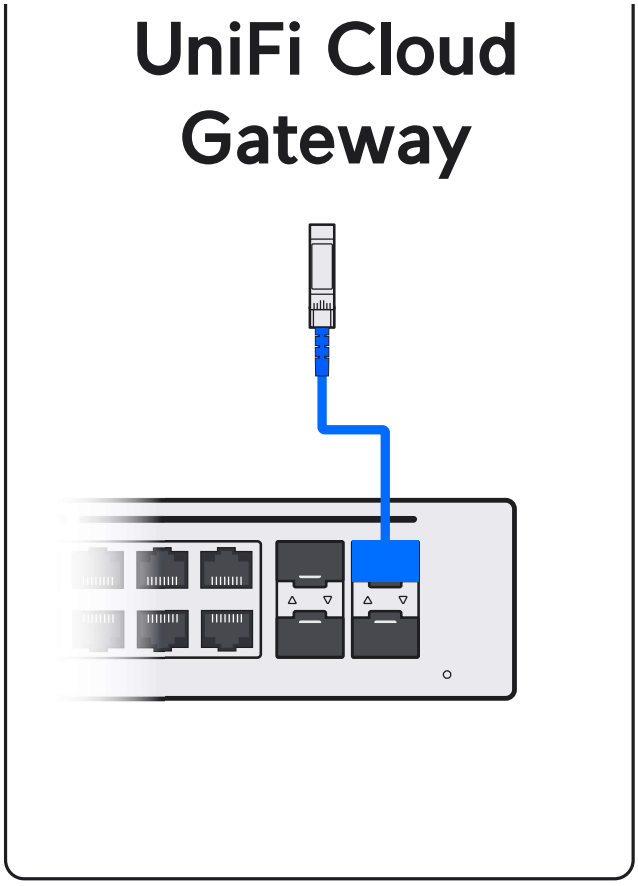
UniFi Cloud Gateway

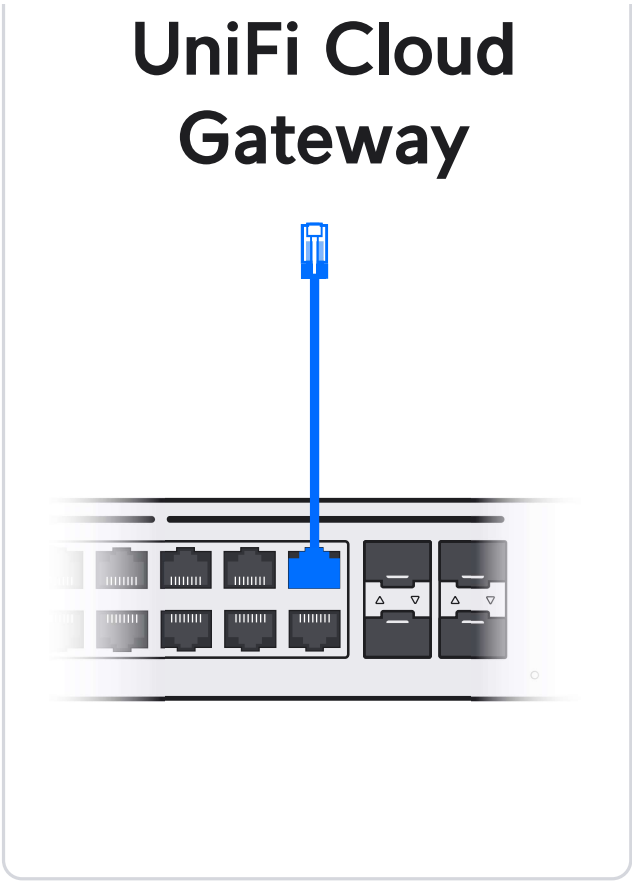
UniFi Cloud Gateway

7

Download on the
App Store
GET IT ON
Google Play

If you need further assistance, visit our Help Center or contact Ubiquiti Support.

©2023 Ubiquiti Inc. All rights reserved. Ubiquiti, Ubiquiti Networks, the Ubiquiti U logo, UniFi, and UniFi Network are trademarks or registered trademarks of Ubiquiti Inc. in the United States and in other countries. Apple and the Apple logo are trademarks of Apple Inc., registered in the U.S. and other countries. App Store is a service mark of Apple Inc., registered in the U.S. and other countries. Android, Google, Google Play, the Google Play logo and other marks are trademarks of Google LLC. All other trademarks are the property of their respective owners.