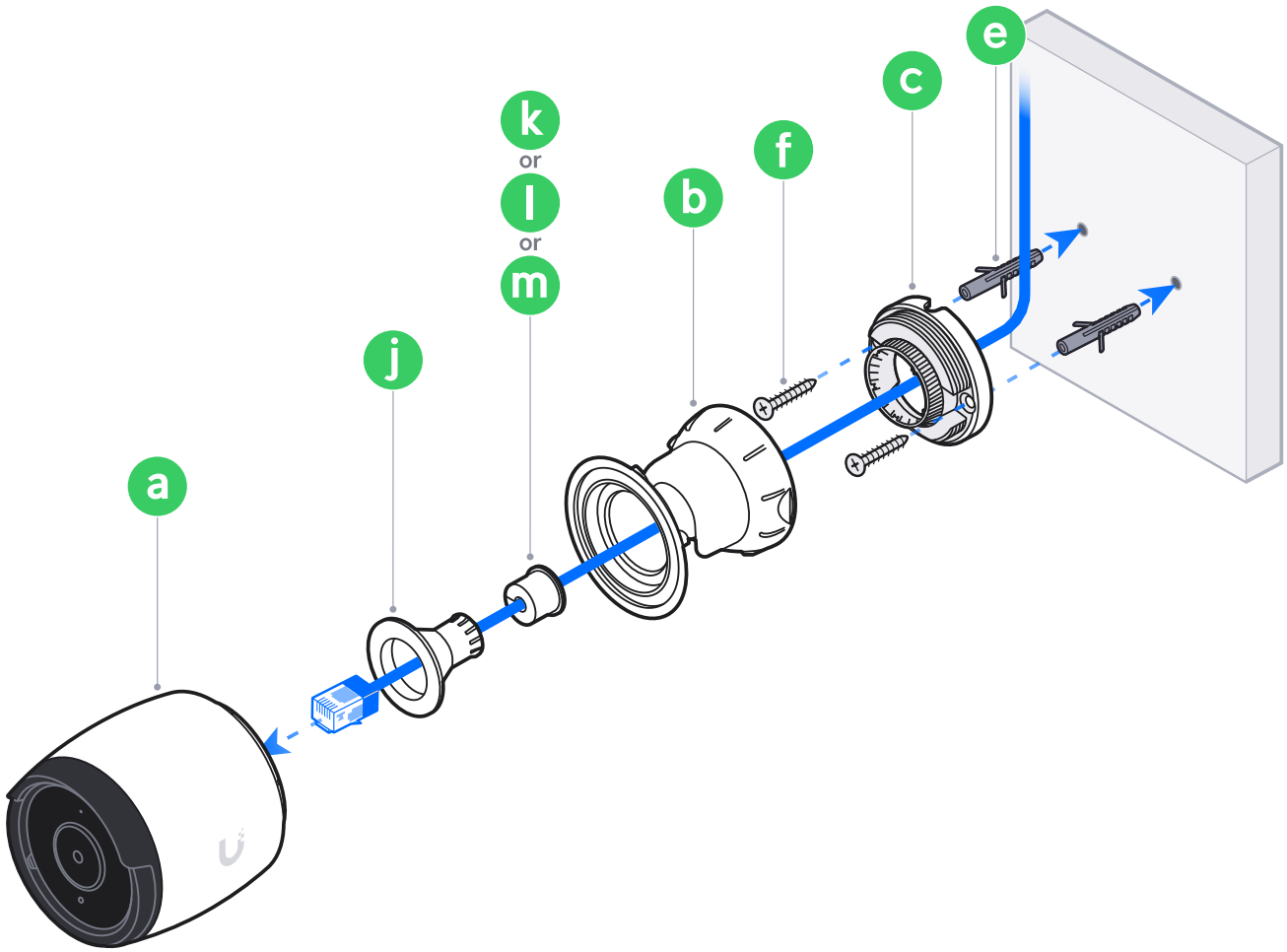
a
j
k
or
l
or
m
b
f
c
e

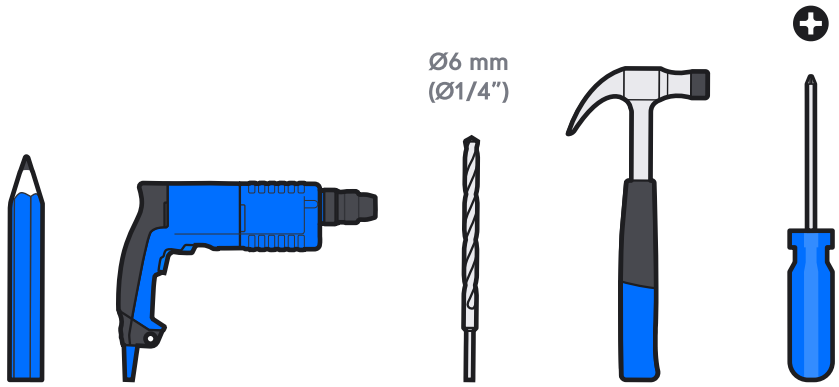
Ø6 mm
(Ø1/4")

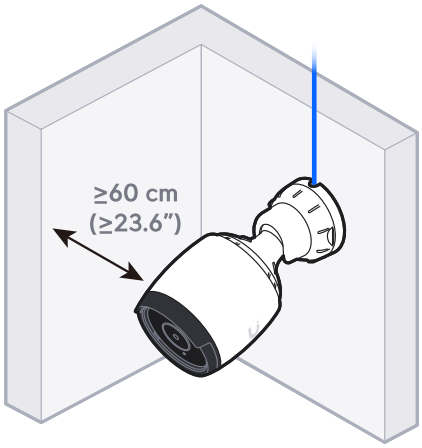

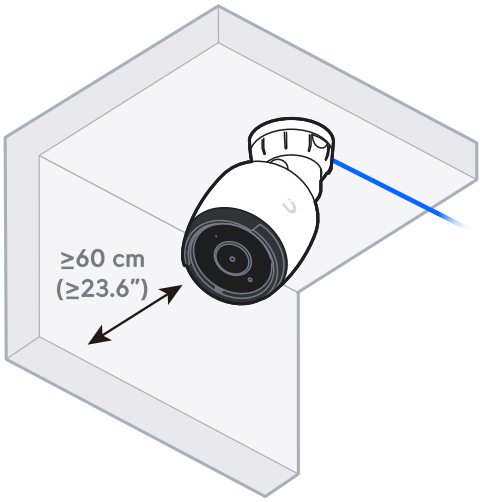

1

1x

C

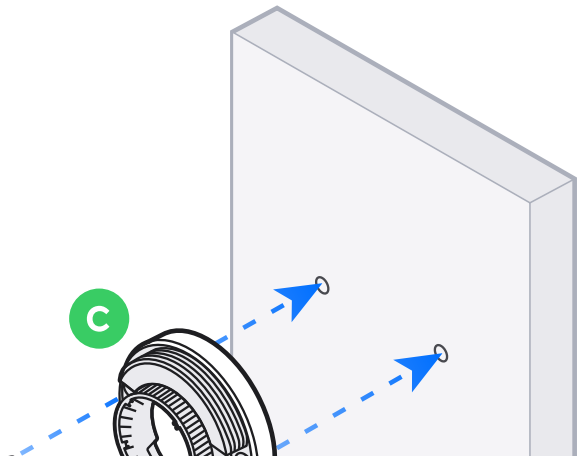

2

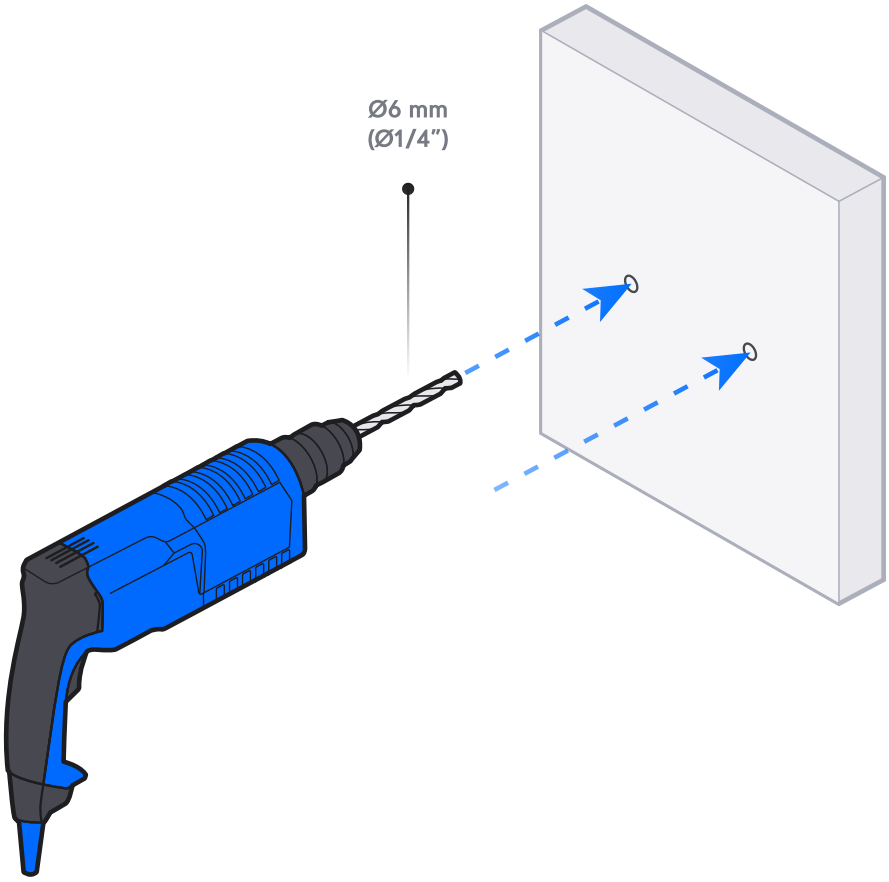

3

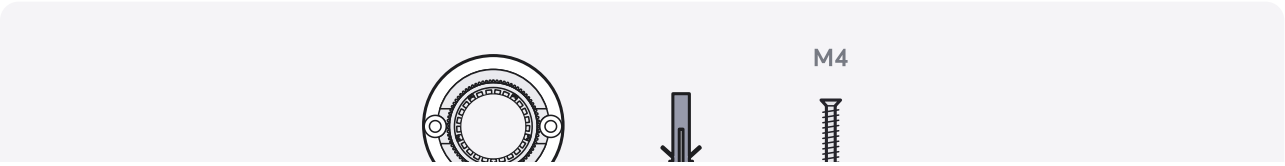

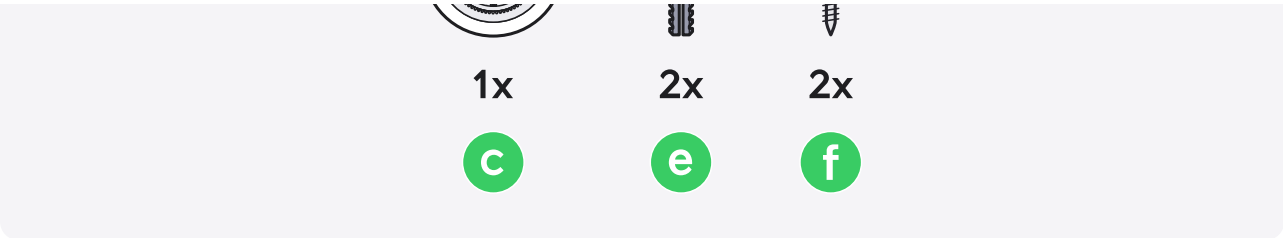

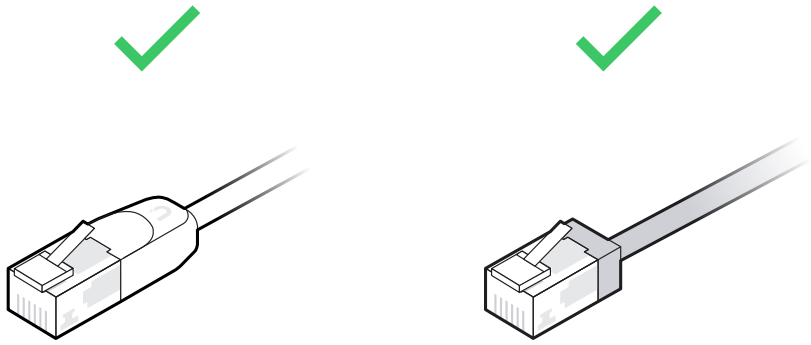

UniFi Outdoor Patch Cable

Buy ›

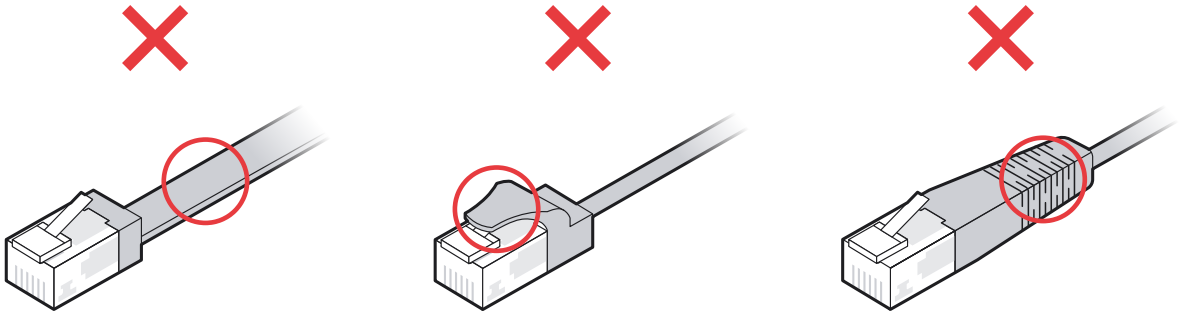

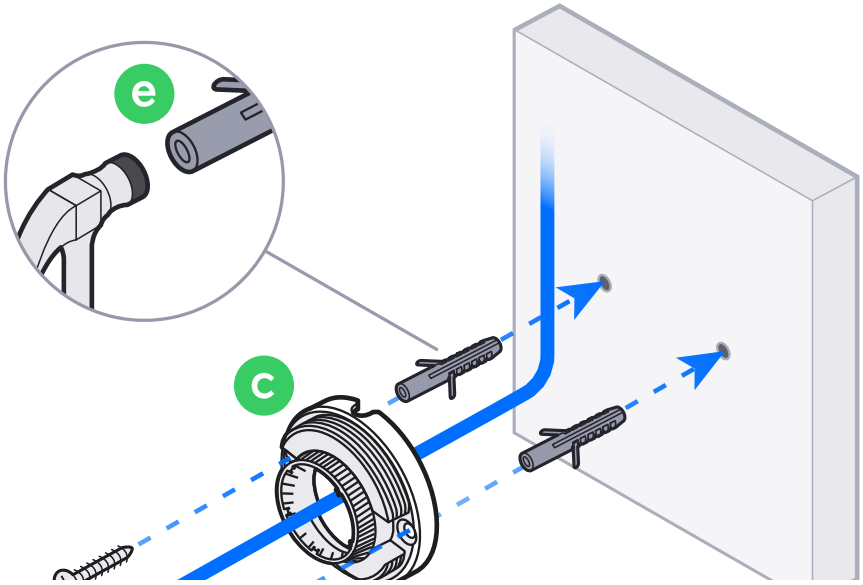

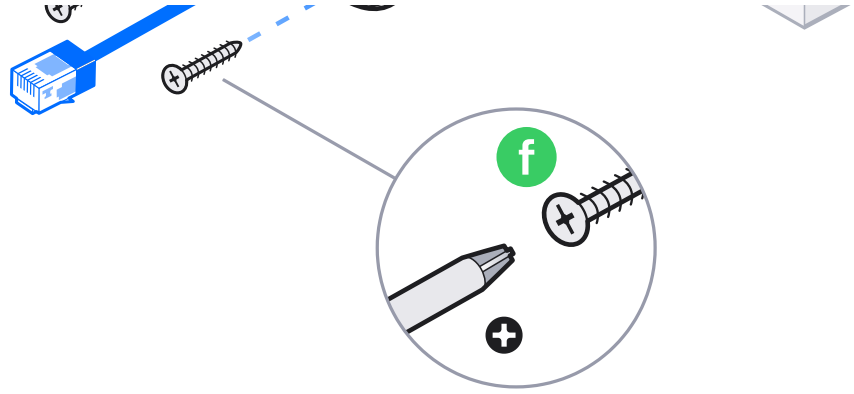

4

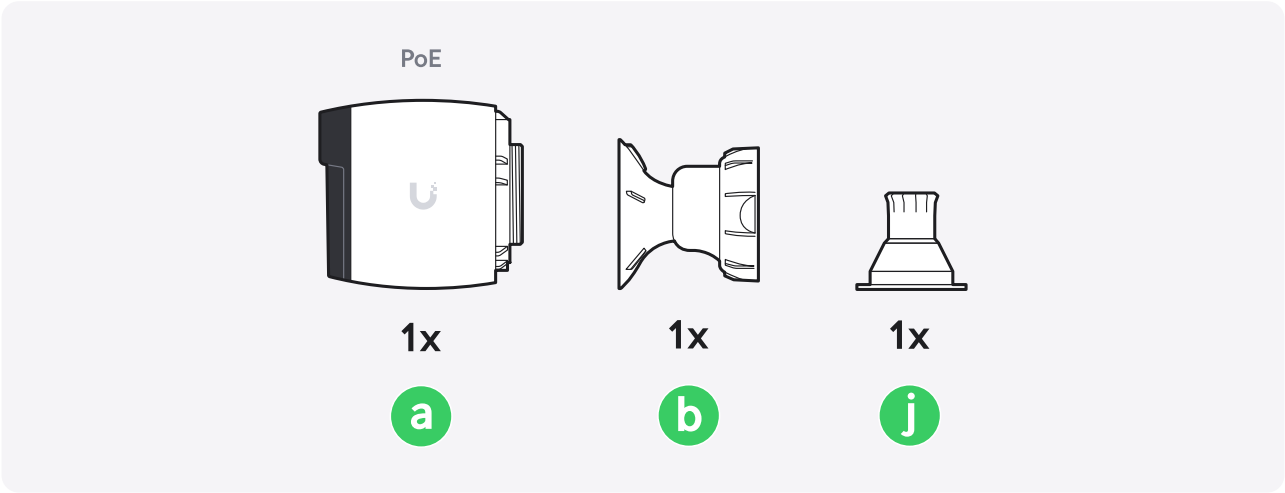

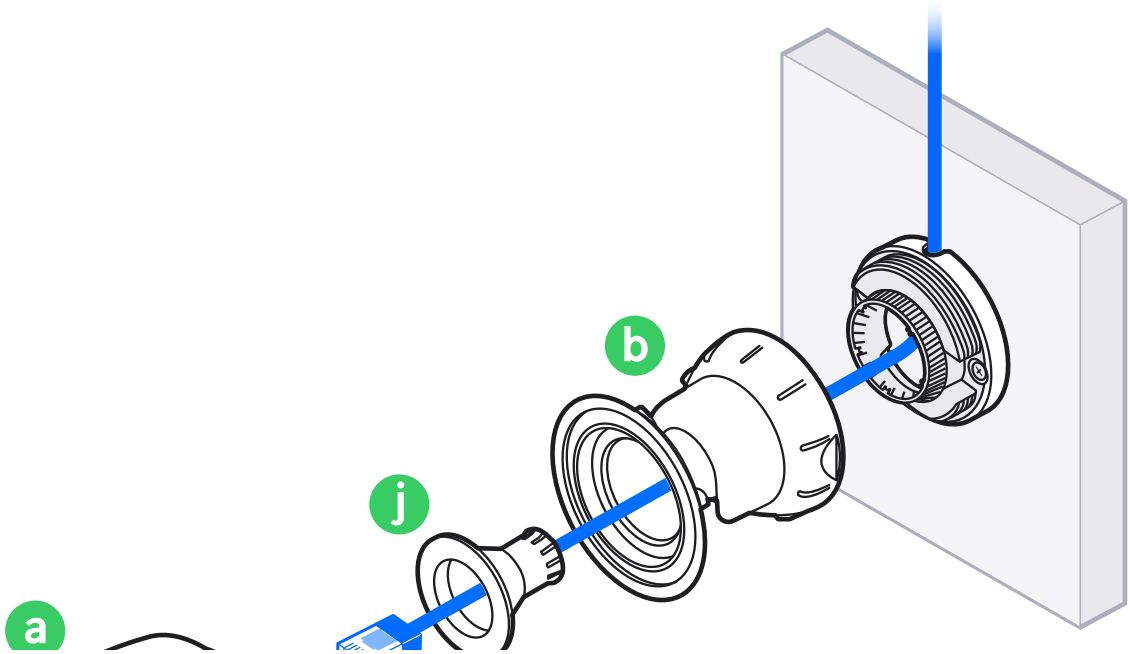

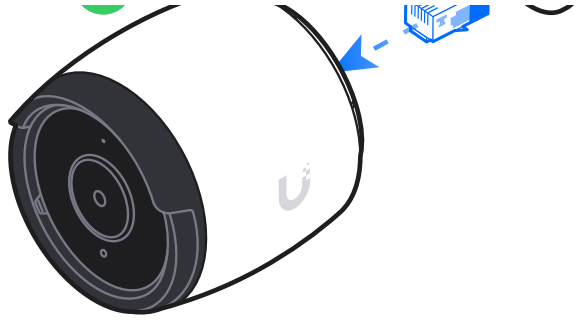

5

Ø3.3~4.5 mm (Ø0.13~0.18")	Ø4.5~5.5 mm (Ø0.18~0.22")	Ø5.5~6.5 mm (Ø0.22~0.26")
1x	1x	1x
k	l	m

Ø3.3~4.5 mm
(Ø0.13~0.18")

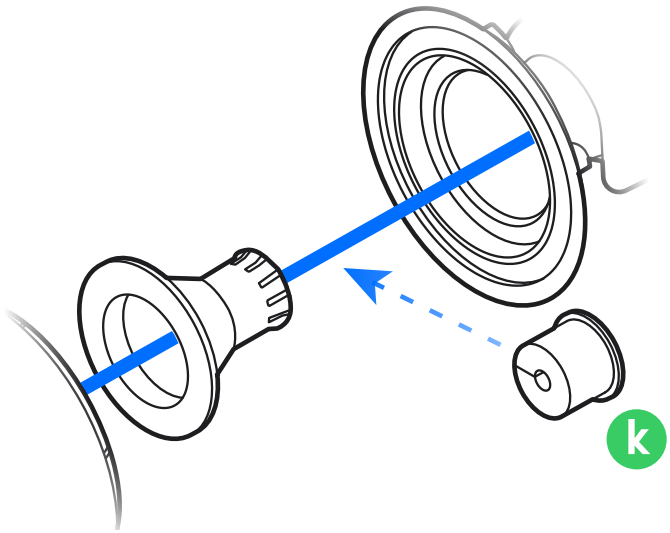

Ø4.5~5.5 mm
(Ø0.18~0.22")

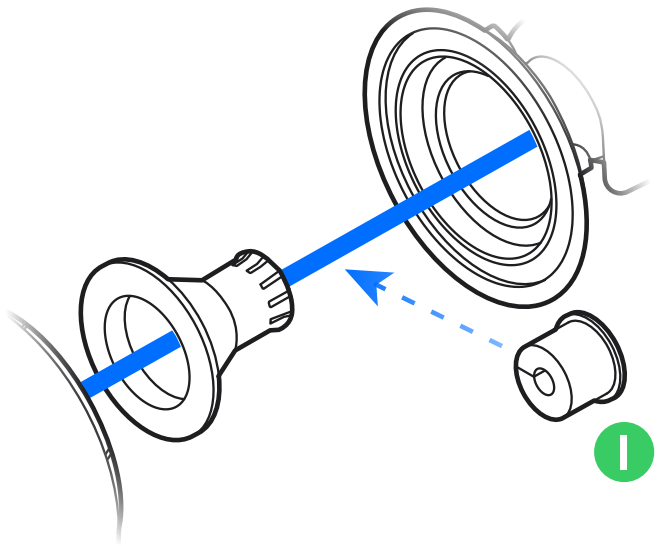

Ø5.5~6.5 mm
(Ø0.22~0.26")

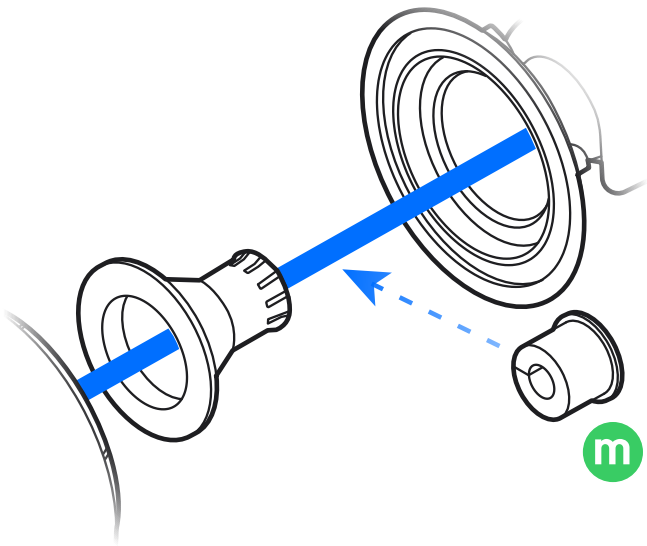

6

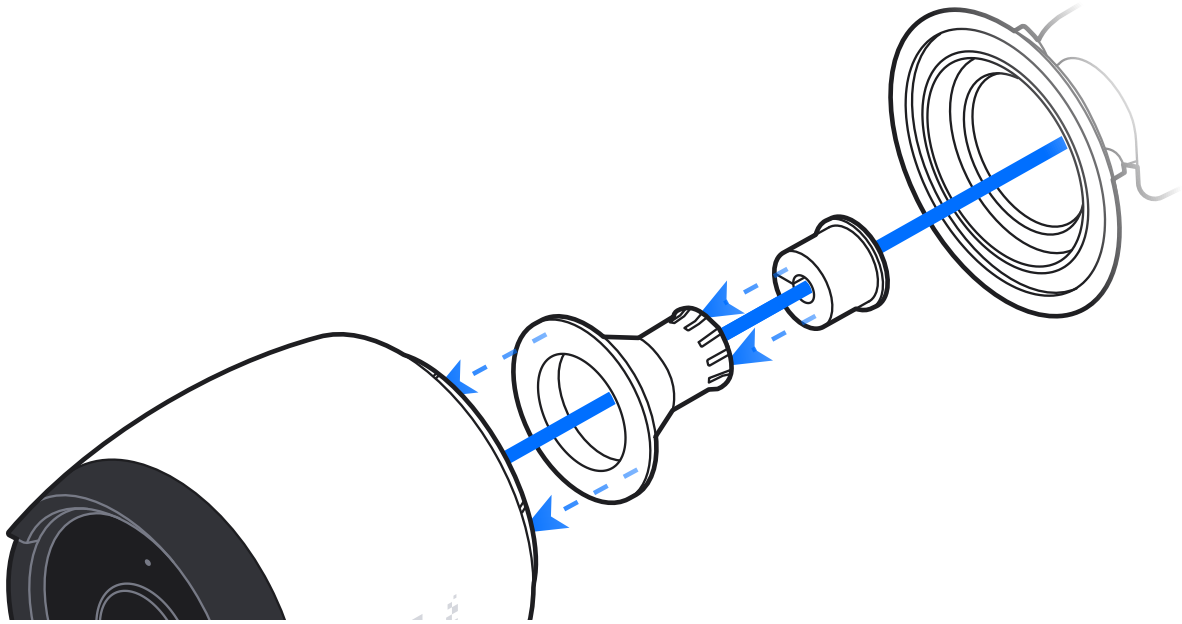

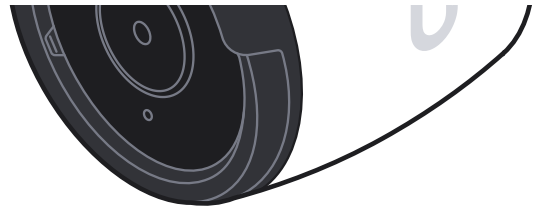

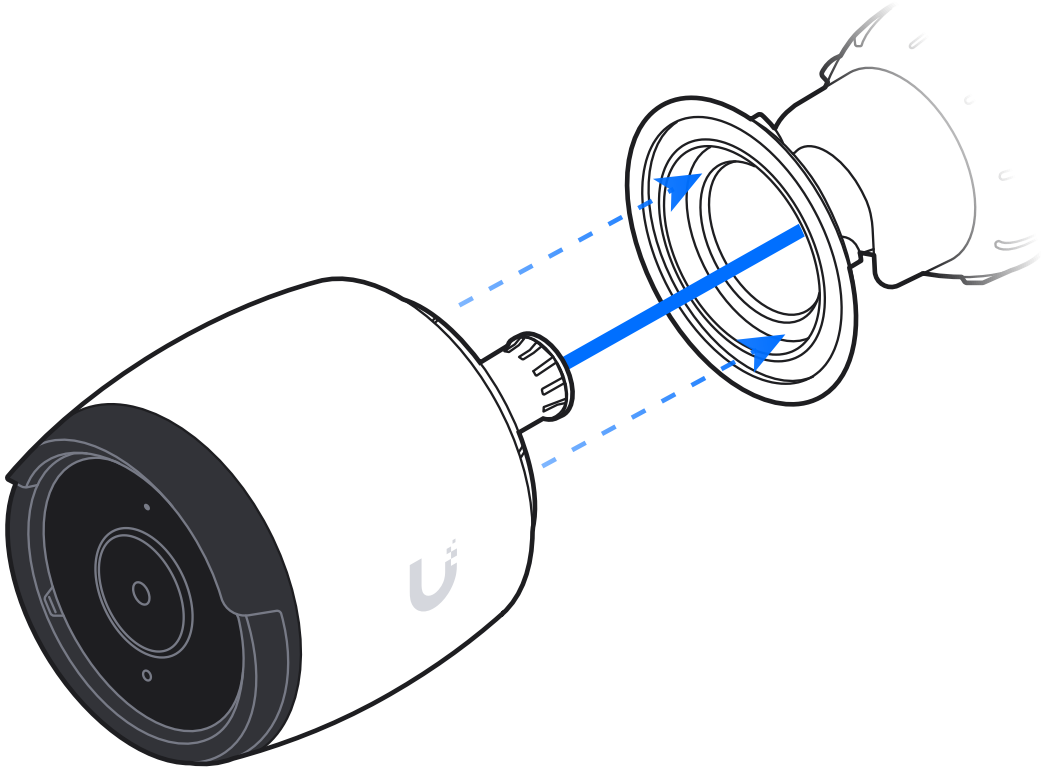

7

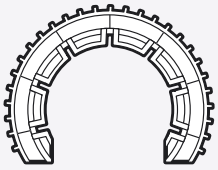

1x

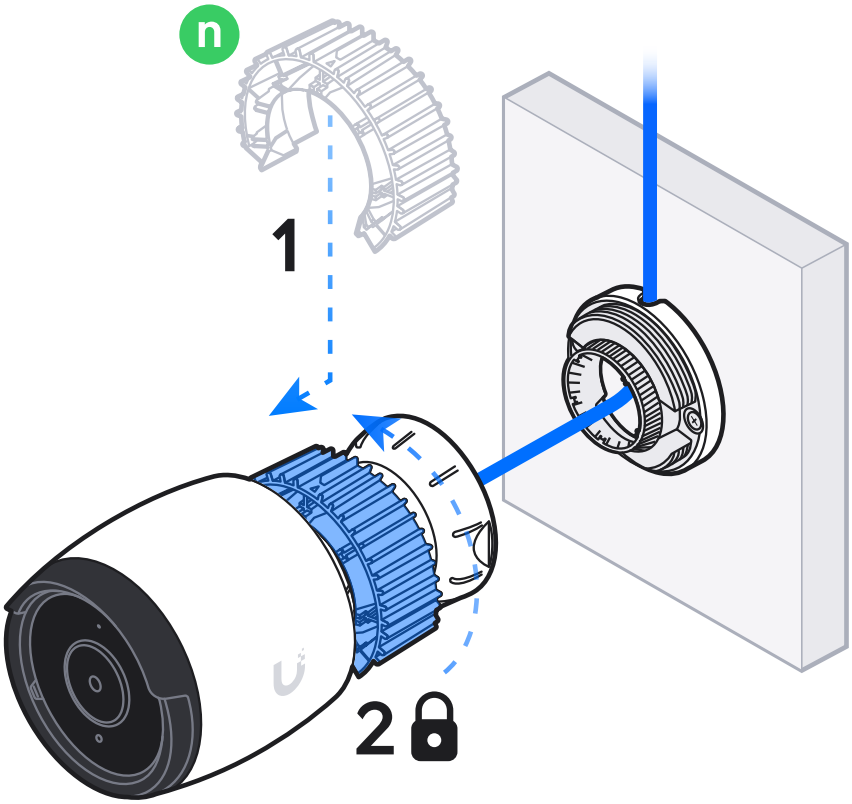

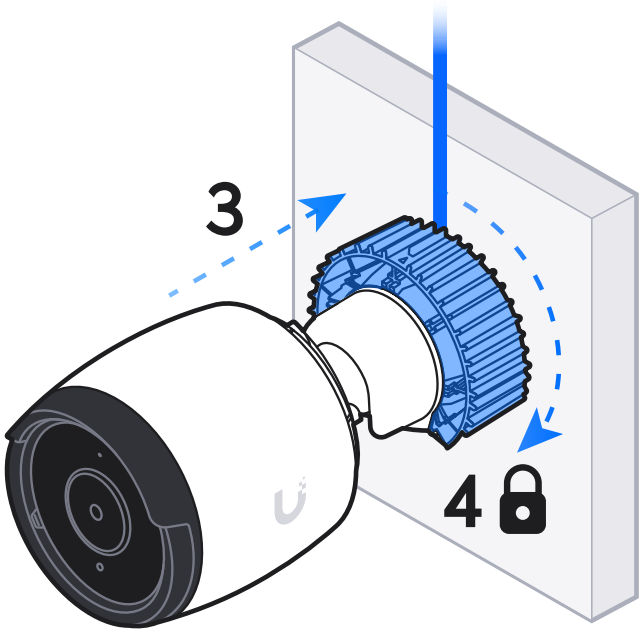

8

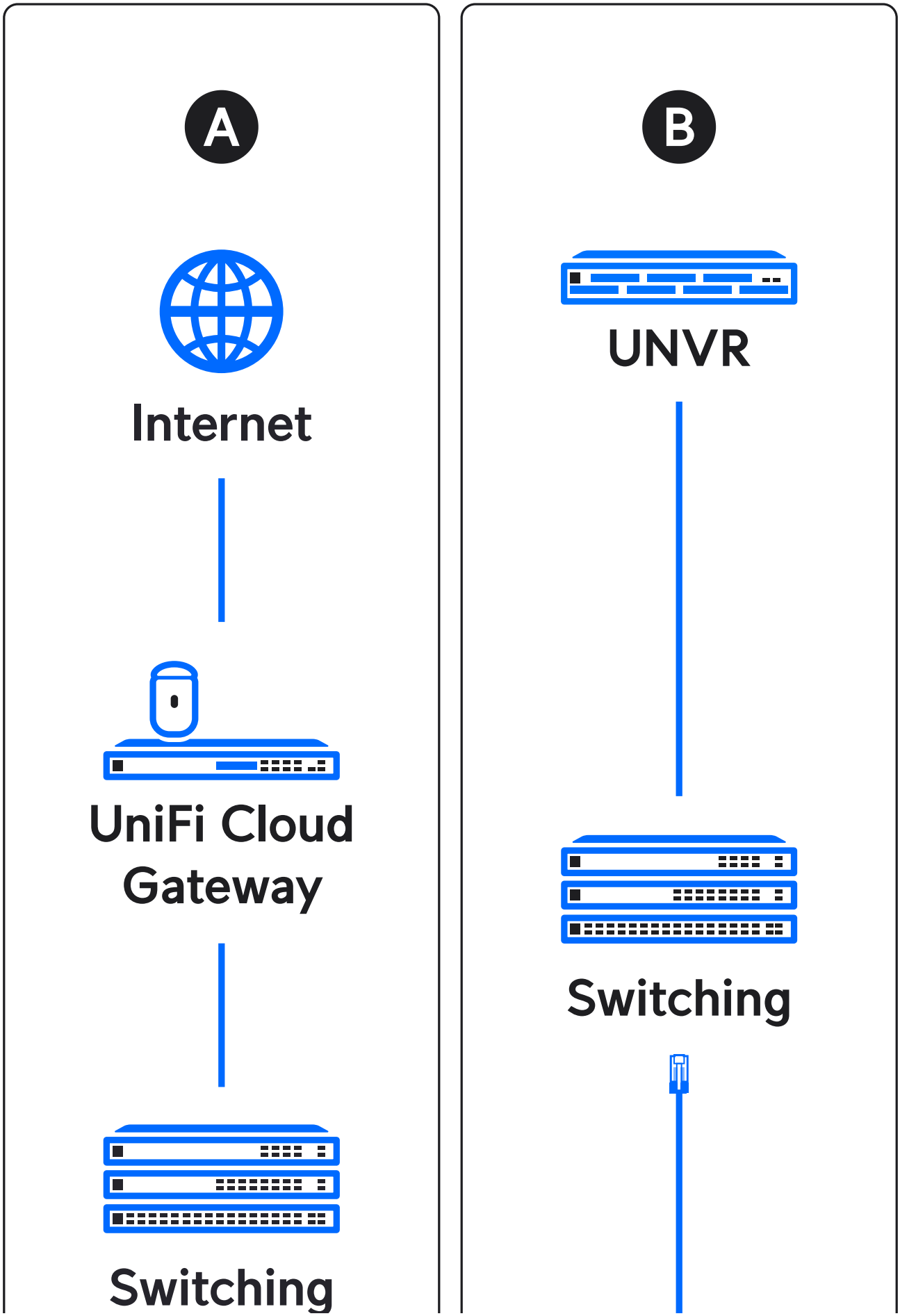
A
Internet
UniFi Cloud Gateway
Switching
B
UNVR
Switching

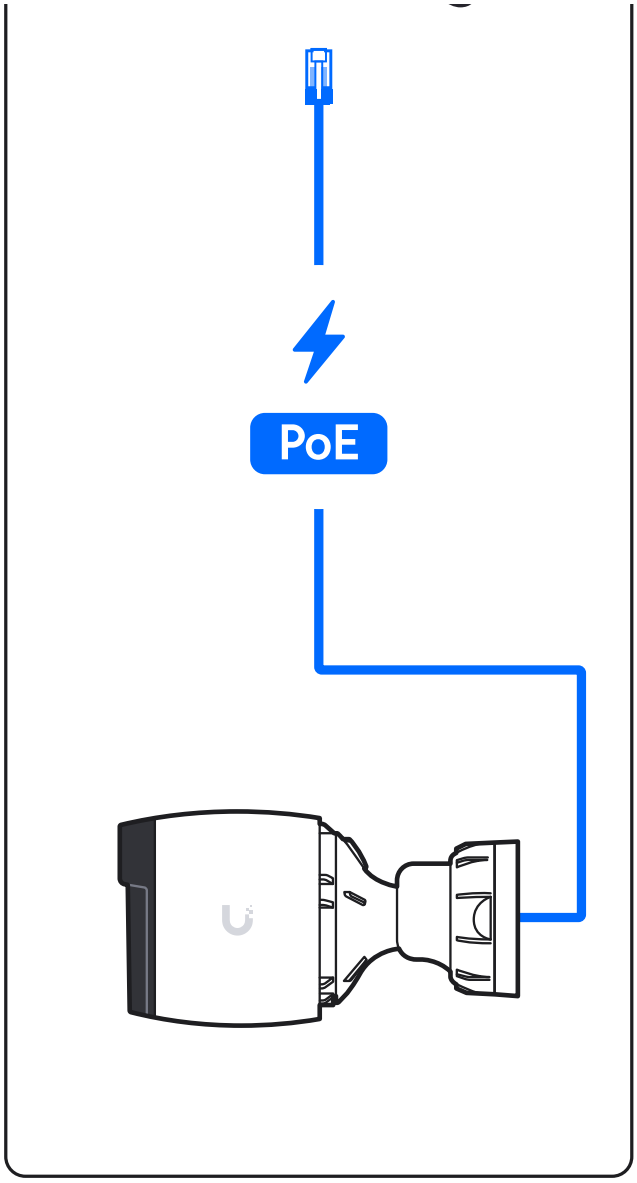
PoE

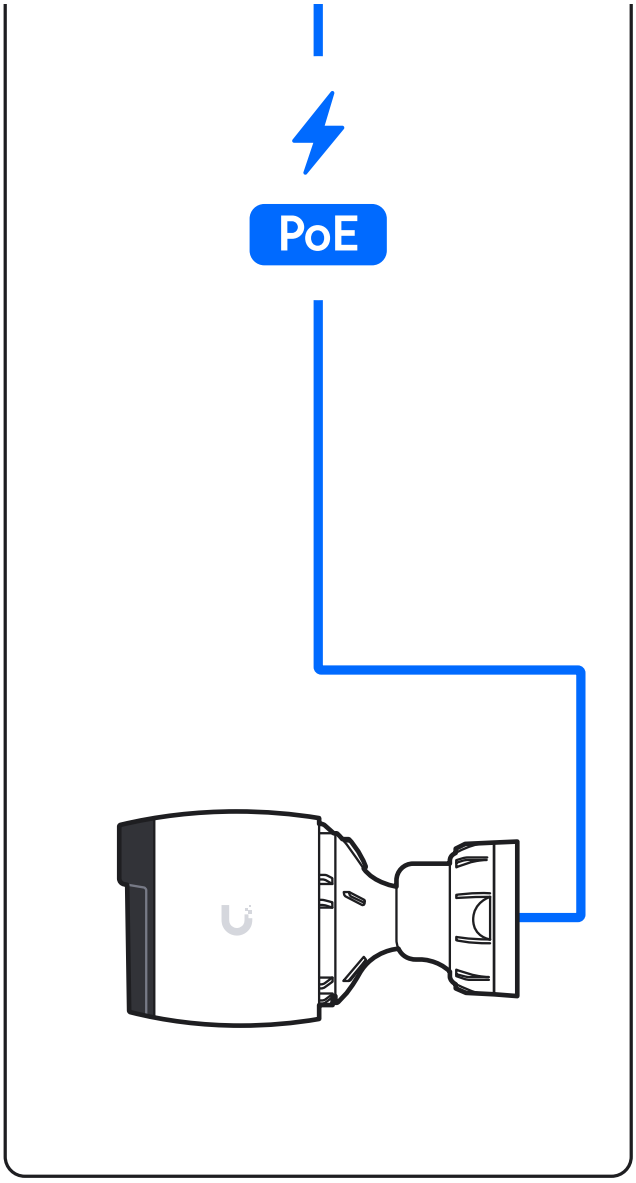
PoE

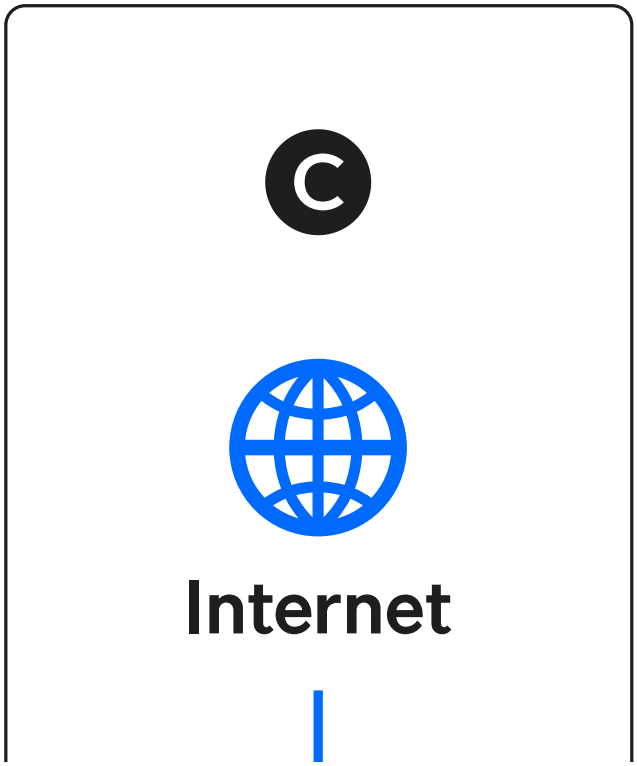
C
Internet

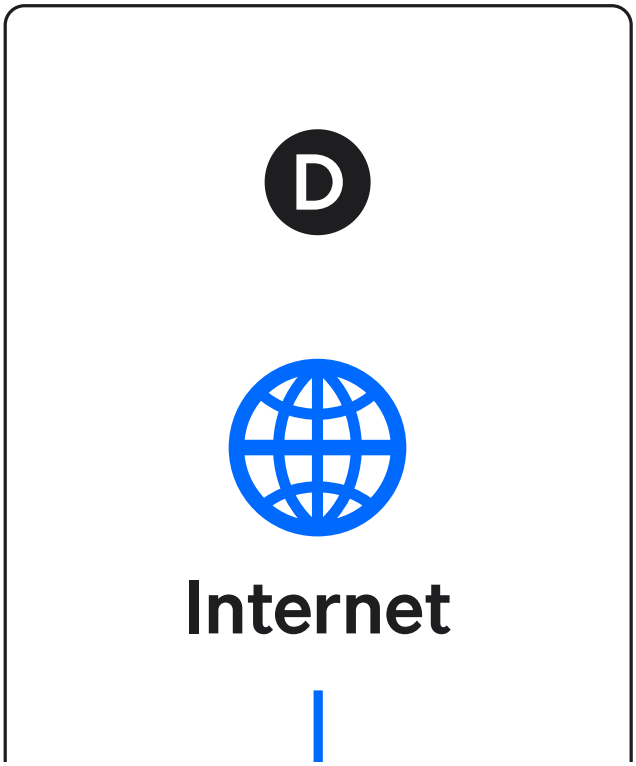
D
Internet

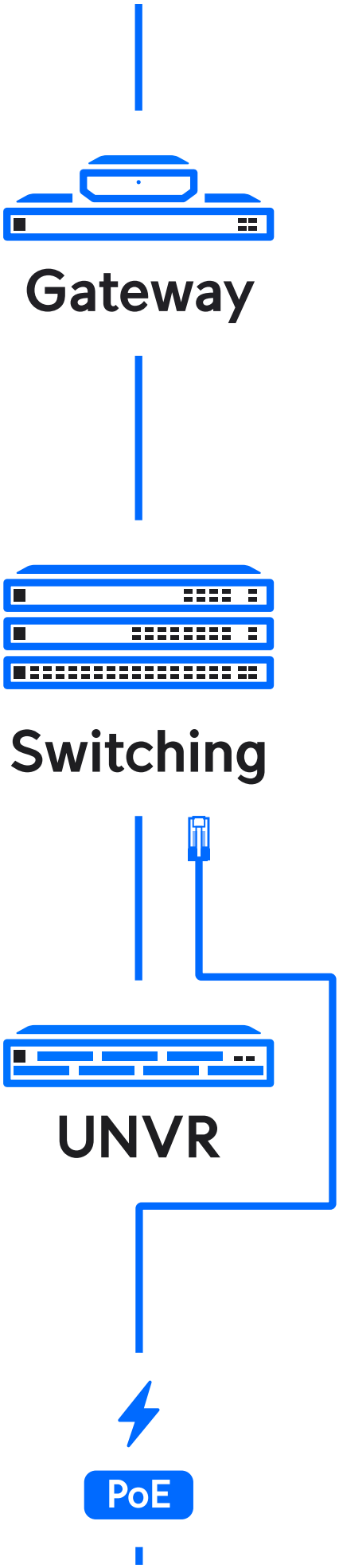
Gateway
Switching
UNVR
PoE

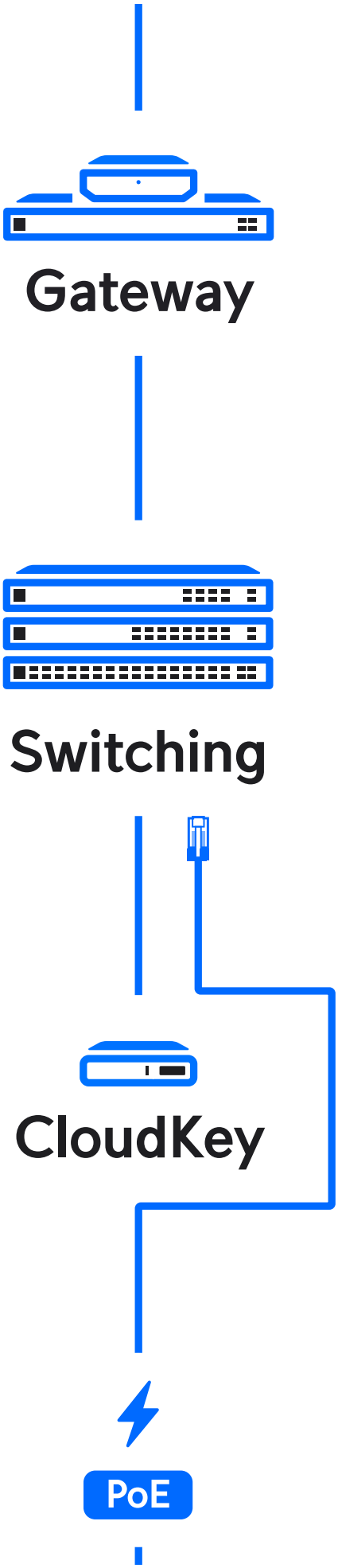
Gateway
Switching
CloudKey
PoE

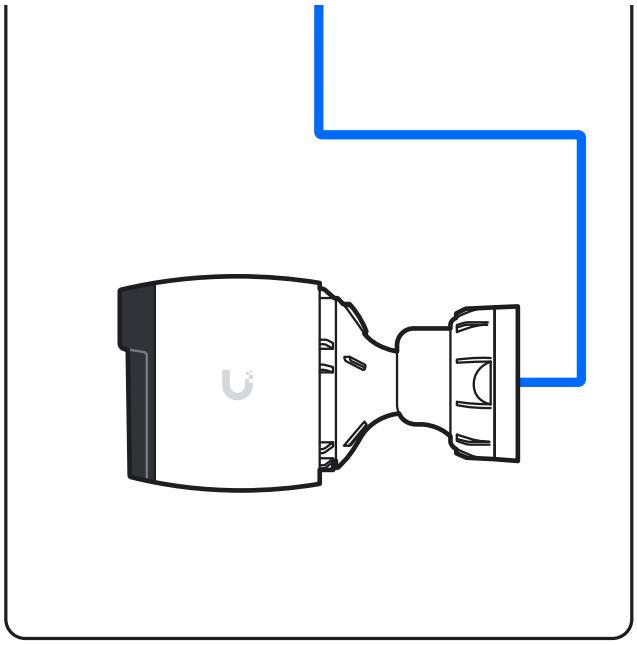

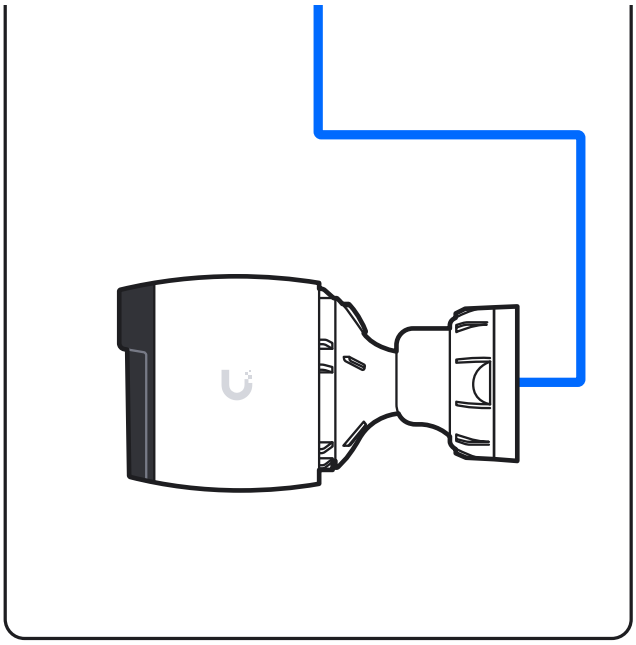

9

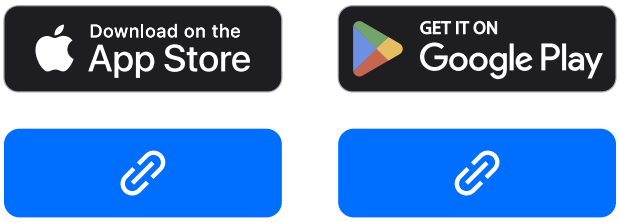

10

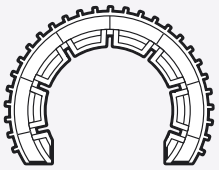

1x

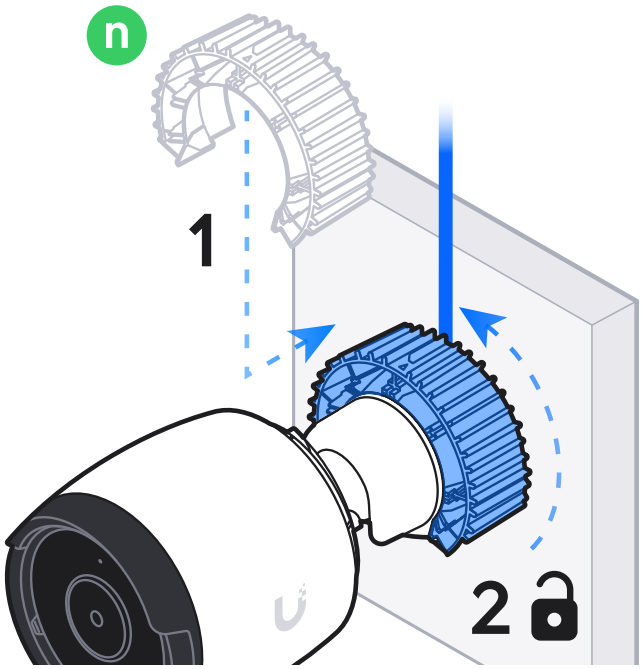

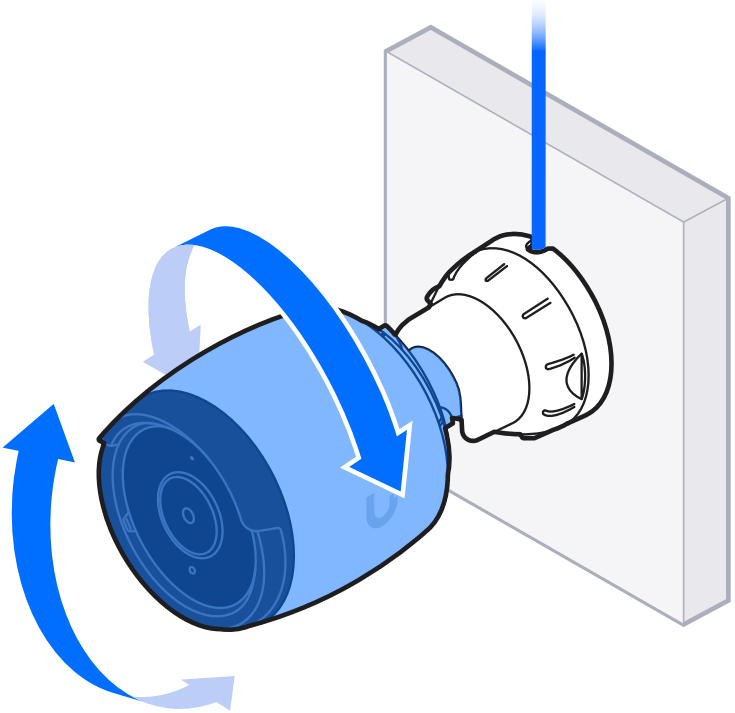

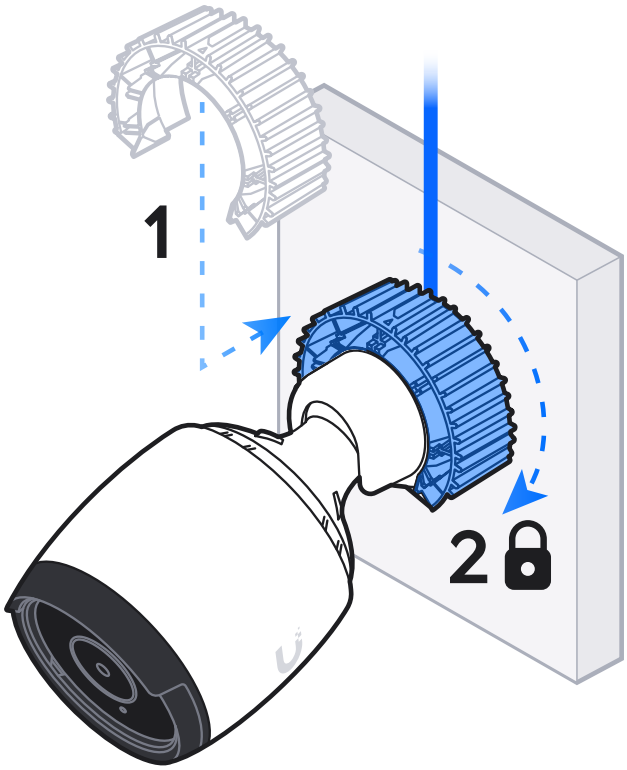
1
2

If you need further assistance, visit our Help Center or contact Ubiquiti Support.

©2024 Ubiquiti Inc. All rights reserved. Ubiquiti, the Ubiquiti U logo, UniFi Protect, UniFi and CloudKey are trademarks or registered trademarks of Ubiquiti Inc. in the United States and in other countries. Apple and the Apple logo are trademarks of Apple Inc., registered in the U.S. and other countries. App Store is a service mark of Apple Inc., registered in the U.S. and other countries. Android, Google, Google Play, the Google Play logo are trademarks of Google LLC.