Honeywell

SILENT KNIGHT

6808

Addressable Fire Alarm Control Panel

Manual

Document LS10146-001SK-E Rev: F
8/29/2022 ECN: 00021453

Fire Alarm & Emergency Communication System Limitations

While a life safety system may lower insurance rates, it is not a substitute for life and property insurance!

An automatic fire alarm system—typically made up of smoke detectors, heat detectors, manual pull stations, audible warning devices, and a fire alarm control panel (FACP) with remote notification capability—can provide early warning of a developing fire. Such a system, however, does not assure protection against property damage or loss of life resulting from a fire.

An emergency communication system—typically made up of an automatic fire alarm system (as described above) and a life safety communication system that may include an autonomous control unit (ACU), local operating console (LOC), voice communication, and other various interoperable communication methods—can broadcast a mass notification message. Such a system, however, does not assure protection against property damage or loss of life resulting from a fire or life safety event.

The Manufacturer recommends that smoke and/or heat detectors be located throughout a protected premises following the recommendations of the current edition of the National Fire Protection Association Standard 72 (NFPA 72), manufacturer's recommendations, State and local codes, and the recommendations contained in the Guide for Proper Use of System Smoke Detectors, which is made available at no charge to all installing dealers. This document can be found at http://www.systemsensor.com/appguides/. A study by the Federal Emergency Management Agency (an agency of the United States government) indicated that smoke detectors may not go off in as many as 35% of all fires. While fire alarm systems are designed to provide early warning against fire, they do not guarantee warning or protection against fire. A fire alarm system may not provide timely or adequate warning, or simply may not function, for a variety of reasons:

Smoke detectors may not sense fire where smoke cannot reach the detectors such as in chimneys, in or behind walls, on roofs, or on the other side of closed doors. Smoke detectors also may not sense a fire on another level or floor of a building. A second-floor detector, for example, may not sense a first-floor or basement fire.

Particles of combustion or "smoke" from a developing fire may not reach the sensing chambers of smoke detectors because:

- Barriers such as closed or partially closed doors, walls, chimneys, even wet or humid areas may inhibit particle or smoke flow.
- Smoke particles may become "cold," stratify, and not reach the ceiling or upper walls where detectors are located.
- Smoke particles may be blown away from detectors by air outlets, such as air conditioning vents.
- Smoke particles may be drawn into air returns before reaching the detector.

The amount of "smoke" present may be insufficient to alarm smoke detectors. Smoke detectors are designed to alarm at various levels of smoke density. If such density levels are not created by a developing fire at the location of detectors, the detectors will not go into alarm.

Smoke detectors, even when working properly, have sensing limitations. Detectors that have photoelectronic sensing chambers tend to detect smoldering fires better than flaming fires, which have little visible smoke. Detectors that have ionizing-type sensing chambers tend to detect fast-flaming fires better than smoldering fires. Because fires develop in different ways and are often unpredictable in their growth, neither type of detector is necessarily best and a given type of detector may not provide adequate warning of a fire.

Smoke detectors cannot be expected to provide adequate warning of fires caused by arson, children playing with matches (especially in bedrooms), smoking in bed, and violent explosions (caused by escaping gas, improper storage of flammable materials, etc.).

Heat detectors do not sense particles of combustion and alarm only when heat on their sensors increases at a predetermined rate or reaches a predetermined level. Rate-of-rise heat detectors may be subject to reduced sensitivity over time. For this reason, the rate-of-rise feature of each detector should be tested at least once per year by a qualified fire protection specialist. Heat detectors are designed to protect property, not life.

IMPORTANT! Smoke detectors must be installed in the same room as the control panel and in rooms used by the system for the connection of alarm transmission wiring, communications, signaling, and/or power. If detectors are not so located, a developing fire may damage the alarm system, compromising its ability to report a fire.

Audible warning devices such as bells, horns, strobes, speakers and displays may not alert people if these devices are located on the other side of closed or partly open doors or are located on another floor of a building. Any warning device may fail to alert people with a disability or those who have recently consumed drugs, alcohol, or medication. Please note that:

- An emergency communication system may take priority over a fire alarm system in the event of a life safety emergency.
- Voice messaging systems must be designed to meet intelligibility requirements as defined by NFPA, local codes, and Authorities Having Jurisdiction (AHJ).
- Language and instructional requirements must be clearly disseminated on any local displays.
- Strobes can, under certain circumstances, cause seizures in people with conditions such as epilepsy.
- Studies have shown that certain people, even when they hear a fire alarm signal, do not respond to or comprehend the meaning of the signal. Audible devices, such as horns and bells, can have different tonal patterns and frequencies. It is the property owner's responsibility to conduct fire drills and other training exercises to make people aware of fire alarm signals and instruct them on the proper reaction to alarm signals.
- In rare instances, the sounding of a warning device can cause temporary or permanent hearing loss.

A life safety system will not operate without any electrical power. If AC power fails, the system will operate from standby batteries only for a specified time and only if the batteries have been properly maintained and replaced regularly.

Equipment used in the system may not be technically compatible with the control panel. It is essential to use only equipment listed for service with your control panel.

Alarm Signaling Communications:

- **IP connections** rely on available bandwidth, which could be limited if the network is shared by multiple users or if ISP policies impose restrictions on the amount of data transmitted. Service packages must be carefully chosen to ensure that alarm signals will always have available bandwidth. Outages by the ISP for maintenance and upgrades may also inhibit alarm signals. For added protection, a backup cellular connection is recommended.
- **Cellular connections** rely on a strong signal. Signal strength can be adversely affected by the network coverage of the cellular carrier, objects and structural barriers at the installation location. Utilize a cellular carrier that has reliable network coverage where the alarm system is installed. For added protection, utilize an external antenna to boost the signal.
- **Telephone lines** needed to transmit alarm signals from a premise to a central monitoring station may be out of service or temporarily disabled. For added protection against telephone line failure, backup alarm signaling connections are recommended.

The most common cause of life safety system malfunction is inadequate maintenance. To keep the entire life safety system in excellent working order, ongoing maintenance is required per the manufacturer's recommendations, and UL and NFPA standards. At a minimum, the requirements of NFPA 72 shall be followed. Environments with large amounts of dust, dirt, or high air velocity require more frequent maintenance. A maintenance agreement should be arranged through the local manufacturer's representative. Maintenance should be scheduled as required by National and/or local fire codes and should be performed by authorized professional life safety system installers only. Adequate written records of all inspections should be kept.

Limit-F-2020

Installation Precautions

Adherence to the following will aid in problem-free installation with long-term reliability:

WARNING - Several different sources of power can be connected to the fire alarm control panel. Disconnect all sources of power before servicing. Control unit and associated equipment may be damaged by removing and/or inserting cards, modules, or interconnecting cables while the unit is energized. Do not attempt to install, service, or operate this unit until manuals are read and understood.

CAUTION - System Re-acceptance Test after Software Changes: To ensure proper system operation, this product must be tested in accordance with NFPA 72 after any programming operation or change in site-specific software. Re-acceptance testing is required after any change, addition or deletion of system components, or after any modification, repair or adjustment to system hardware or wiring. All components, circuits, system operations, or software functions known to be affected by a change must be 100% tested. In addition, to ensure that other operations are not inadvertently affected, at least 10% of initiating devices that are not directly affected by the change, up to a maximum of 50 devices, must also be tested and proper system operation verified.

This system meets NFPA requirements for operation at 0-49º C/32-120º F and at a relative humidity 93% ± 2% RH (non-condensing) at 32°C ± 2°C (90°F ± 3°F). However, the useful life of the system's standby batteries and the electronic components may be adversely affected by extreme temperature ranges and humidity. Therefore, it is recommended that this system and its peripherals be installed in an environment with a normal room temperature of 15-27º C/60-80º F.

Verify that wire sizes are adequate for all initiating and indicating device loops. Most devices cannot tolerate more than a 10% I.R. drop from the specified device voltage.

Like all solid state electronic devices, this system may operate erratically or can be damaged when subjected to lightning induced transients. Although no system is completely immune from lightning transients and interference, proper grounding will reduce susceptibility. Overhead or outside aerial wiring is not recommended, due to an increased susceptibility to nearby lightning strikes. Consult with the Technical Services Department if any problems are anticipated or encountered.

Disconnect AC power and batteries prior to removing or inserting circuit boards. Failure to do so can damage circuits.

Remove all electronic assemblies prior to any drilling, filing, reaming, or punching of the enclosure. When possible, make all cable entries from the sides or rear. Before making modifications, verify that they will not interfere with battery, transformer, or printed circuit board location.

Do not tighten screw terminals more than 9 in-lbs. Over-tightening may damage threads, resulting in reduced terminal contact pressure and difficulty with screw terminal removal.

This system contains static-sensitive components. Always ground yourself with a proper wrist strap before handling any circuits so that static charges are removed from the body. Use static suppressive packaging to protect electronic assemblies removed from the unit.

Units with a touchscreen display should be cleaned with a dry, clean, lint free/microfiber cloth. If additional cleaning is required, apply a small amount of Isopropyl alcohol to the cloth and wipe clean. Do not use detergents, solvents, or water for cleaning. Do not spray liquid directly onto the display.

Follow the instructions in the installation, operating, and programming manuals. These instructions must be followed to avoid damage to the control panel and associated equipment. FACP operation and reliability depend upon proper installation.

Precau-D2-11-2017

FCC Warning

WARNING: This equipment generates, uses, and can radiate radio frequency energy and if not installed and used in accordance with the instruction manual may cause interference to radio communications. It has been tested and found to comply with the limits for class A computing devices pursuant to Subpart B of Part 15 of FCC Rules, which is designed to provide reasonable protection against such interference when devices are operated in a commercial environment. Operation of this equipment in a residential area is likely to cause interference, in which case the user will be required to correct the interference at his or her own expense.

Canadian Requirements

This digital apparatus does not exceed the Class A limits for radiation noise emissions from digital apparatus set out in the Radio Interference Regulations of the Canadian Department of Communications.

Le present appareil numerique n'emet pas de bruits radioelectriques depassant les limites applicables aux appareils numeriques de la classe A prescrites dans le Reglement sur le brouillage radioelectrique edicte par le ministere des Communications du Canada.

Flexput®, Honeywell®, **JumpStart®**, **Silent Knight®,** and **SWIFT®** are registered trademarks of Honeywell International Inc.**Microsoft®** and **Windows®** are registered trademarks of the Microsoft Corporation. **Chrome™** and **Google™** are trademarks of Google Inc. **Firefox®** is a registered trademark of The Mozilla Foundation.

©2022. All rights reserved. Unauthorized use of this document is strictly prohibited.

Software Downloads

In order to supply the latest features and functionality in fire alarm and life safety technology to our customers, we make frequent upgrades to the embedded software in our products. To ensure that you are installing and programming the latest features, we strongly recommend that you download the most current version of software for each product prior to commissioning any system. Contact Technical Support with any questions about software and the appropriate version for a specific application.

Documentation Feedback

Your feedback helps us keep our documentation up-to-date and accurate. If you have any comments or suggestions about our online Help or printed manuals, you can email us.

Please include the following information:

- Product name and version number (if applicable)
- Printed manual or online Help
- Topic Title (for online Help)
- Page number (for printed manual)
- Brief description of content you think should be improved or corrected
- Your suggestion for how to correct/improve documentation

Send email messages to:

FireSystems.TechPubs@honeywell.com

Please note this email address is for documentation feedback only. If you have any technical issues, please contact Technical Services.

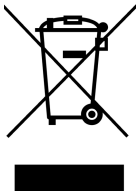

This symbol (shown left) on the product(s) and / or accompanying documents means that used electrical and electronic products should not be mixed with general household waste. For proper treatment, recovery and recycling, contact your local authorities or dealer and ask for the correct method of disposal.

Electrical and electronic equipment contains materials, parts and substances, which can be dangerous to the environment and harmful to human health if the waste of electrical and electronic equipment (WEEE) is not disposed of correctly.

Table of Contents

Section 1: Introduction 9
1.1: Basic System Overview 9
1.1.1: Hardware Features 9
1.1.2: Network System Hardware Features 9
1.1.3: Software Features 9
1.1.4: Terms Used in this Manual 9
1.2: Compatible Products 10
1.3: Related Documentation 11

Section 2: Agency Listings, Approvals, and Requirements 12
2.1: Federal Communications Commission (FCC) 12
2.2: Underwriters Laboratories (UL) 12
2.2.1: Requirements for All Installations 12
2.2.2: UL 864 9th and 10th Edition 13
2.2.3: Requirements for Central Station Fire Alarm Systems 13
2.2.4: Requirements for Local Protected Fire Alarm Systems 13
2.2.5: Requirements for Remote Station Protected Fire Alarm Systems 13
2.2.6: Requirements for the Installation of Carbon Monoxide (CO) Detection and Warning Equipment, NFPA 720 13
2.2.7: NFPA Requirements 13

Section 3: Prerequisites for Installation 15
3.1: Inventory 15
3.2: Environmental Specifications 15
3.3: Software Downloads 15
3.4: Electrical Specifications 15
3.5: Calculating Current Draw and Standby Battery 16
3.5.1: Worksheet Requirements 16
3.5.2: Current Draw Worksheet for SK SLC Devices 17
3.5.3: Current Draw Worksheet for SD SLC Devices 20
3.5.4: Maximum Battery Standby Load 22

Section 4: Control Panel Installation 23
4.1: Mounting the Control Panel Cabinet 23
4.1.1: Preventing Water Damage 23
4.1.2: Removing the 6808 Assembly from the Housing 23
4.1.3: Ethernet Connection 23
4.2: Board Layout 24
4.3: Wiring Specifications 24
4.4: AC Connection 25
4.5: Battery Power 26
4.5.1: RBB Accessory Cabinet 26
4.6: Wiring Specifications 28
4.6.1: Length Limitations 28
4.6.2: Calculating Wiring Distance for SBUS Modules 28
4.6.3: Wiring Configurations 30
4.7: 6855 Remote Annunciator Installation 30
4.7.1: Mounting the 6855 31
4.7.2: 6855 Connection to the Panel 32
4.8: 5860 Remote Annunciator Installation 32
4.8.1: Mounting the 5860 33
4.9: 6860 Remote Annunciator Installation 35
4.9.1: Mounting the 6860 35
4.9.2: 6860 Connection to the Panel 37
4.10: 5824 Serial/Parallel Printer Interface Module Installation 37
4.10.1: Selecting 5824 Options 37
4.11: 5880 LED I/O Module 38
4.11.1: 5880 Board Layout 38
4.11.2: 5880 Connection to Panel 39
4.11.3: LED Wiring 39
4.11.4: Dry Contact Wiring 40
4.12: 5865-3 / 5865-4 LED Annunciator Installation 40
4.12.1: 5865 Connection to Panel 41

4.12.2: 5865 Mounting....42
4.13: Configuring SBUS Modules....42
4.13.1: Assigning SBUS Module IDs....42
4.13.2: SBUS Bandwidth Considerations....43
4.13.3: Communication Protocol....43
4.13.4: End-of-Line Resistor....43
4.14: Telephone Connection....44
4.15: Notification Appliance/Auxiliary Power Circuits....44
4.15.1: Conventional Notification Appliance....44
4.15.2: Auxiliary Power Installation....45
4.16: Onboard Relays (Conventional)....46
4.16.1: Trouble Relay....46
4.16.2: Programmable Relays....46
4.17: Remote Station Applications....46
4.17.1: Keltron Model 3158 Installation....46
4.17.2: City Box Connection Using the 5220 Module....47
4.17.3: NFPA 72 Polarity Reversal....48
4.17.4: Transmitter Activated by Dry Contacts....53

Section 5: Common Communication Link....54
5.1: Hardware Features....54
5.1.1: Panels....54
5.2: Common Communication Link Wiring....54
5.2.1: Wiring Options....54
5.3: SK-NIC Wiring Options....55
5.3.1: Fiber Loop Modules....55
5.3.2: SK-NIC Mounting Kits....56
5.4: SK-NIC Installation....56
5.4.1: SK-NIC Remote Mounting....56
5.4.2: Wiring....57
5.5: Setting the ID for Each Panel....59

Section 6: Network Management....60
6.1: Network Diagnostics....60
6.1.1: Ping Panel....60
6.1.2: Data Network Status....60
6.2: Network Programming....60
6.2.1: Learn Network....60
6.2.2: Edit Network Names....60
6.2.3: Edit Panel ID....60
6.2.4: Computer Access....61
6.2.5: Access Codes....61
6.2.6: Communicator Options....61
6.3: Sync Network Options....63
6.4: Network Management Quick Reference....63

Section 7: Programming Overview....65
7.1: JumpStart Auto-programming....65
7.1.1: Input Points....65
7.1.2: Output Points....65
7.1.3: Running JumpStart Auto-programming....65
7.2: Mapping Overview....66
7.2.1: Input Point Mapping....67
7.2.2: Output Circuit Mapping....67
7.2.3: Event Mapping....68
7.2.4: Mapping LED Points....69
7.2.5: Mapping LED Points for a Networked System....70
7.3: Programming Using the HFSS Software Suite....70
7.4: Programming Using an Annunciator....70
7.4.1: Entering / Exiting Panel Programming....70
7.4.2: Moving through the Menus....70
7.4.3: Selecting Options and Entering Data....71
7.5: Programming Menu Quick Reference....71

Section 8: Programming 80
8.1: UL 864 Programming Requirements 80
8.2: Modules 80
8.2.1: Edit Modules 80
8.2.2: Adding a Module 81
8.2.3: Deleting a Module 81
8.2.4: View Module List 81
8.3: Zone 81
8.3.1: Edit Zone 82
8.3.2: View Zone Points 83
8.4: Group 84
8.4.1: Edit Group 84
8.4.2: View Group Points 84
8.4.3: Edit OPG (Output Group) Template 84
8.5: Point 85
8.5.1: Point Programming for an SLC Module 86
8.5.2: Point Programming For Internal or External Power Module (5895XL) 88
8.5.3: Point Programming for 5880 or 5865 Modules 90
8.5.4: Point Programming for the 5496 90
8.6: System Options 90
8.6.1: Communication Options 91
8.6.2: Time Options 93
8.6.3: Miscellaneous Options 94
8.6.4: Daylight Savings Options 94
8.6.5: Edit Banner 95
8.6.6: SLC Family 95
8.7: JumpStart Auto-Programming 95
8.8: Restore Defaults 95
Section 9: System Operation 97
9.1: Annunciator Description 97
9.1.1: LCD Display 97
9.1.2: Banner 97
9.2: Menu System 97
9.2.1: Panel Login Menu 98
9.2.2: Main Menu Overview 99
9.2.3: Using the Menus 99
9.3: Basic Operation 100
9.3.1: Setting Time and Date 100
9.3.2: Disable / Enable a Point 100
9.3.3: View Event History 100
9.3.4: Conduct a Fire Drill 100
9.3.5: Conduct an Indicator Test 101
9.3.6: Conduct a Walk Test 101
9.3.7: Conduct a Communicator Test 101
9.3.8: Manual AlarmNet Registration 101
9.3.9: Silence Alarms or Troubles 101
9.3.10: Reset Alarms 102
9.3.11: Check Detector Sensitivity Through Point Status 102
9.3.12: View Status of a Point 103
9.3.13: View Alarms or Troubles 103
9.3.14: System Information 103
9.4: Panel Operating Modes 104
9.4.1: Multi-Site Annunciator and Multi-Site User Access 107
9.5: Releasing Operations 107
9.5.1: Single Interlock Zone Releasing 108
9.5.2: Double Interlock Zone Releasing 108
9.6: Smoke Alarm Verification 109
9.7: Function Keys 109
9.7.1: Recording an F-Key Macro 109
9.7.2: Aborting an F-Key Macro Recording Session 109
9.7.3: Erasing an F-Key Macro 110

9.7.4: Using a Recorded F-Key Macro 110
9.7.5: F-Key Status Event 110
9.7.6: F-Key Map Inhibit 110

Section 10: Reporting 111
10.1: Receivers Compatible with the Control Panel 111
10.2: SIA - Panels PI Modifier Reporting 120
10.3: SIA – Panel Communicator 120

Section 11: Testing and Troubleshooting 122
11.1: Troubleshooting 122
11.1.1: Common Problems 122
11.2: Periodic Testing and Maintenance 122
11.3: Event History 123
11.4: Built-in Troubleshooting and Testing Tools 123
11.4.1: SLC Device Locater 123
11.4.2: SLC Multiple Device Locater 123
11.4.3: I/O Point Control 124
11.4.4: Earth Fault Resistance 124

Section 12: Installation Records 125
12.1: Detector and Module Point Record 125

Appendix A: Editing Text Using the Built-In Programmer 127
A.1: Characters Used for Editing Text 127
A.2: Example Name Edit 127

Appendix B: Expanded Receiver/Panel Relationship 128

Appendix C: Cadence Patterns 129

Appendix D: Panel Security 130

Model 6808 Basic Operating Instructions 131

Section 1: Introduction

The 6808 is an analog addressable fire alarm control panel (FACP), that meets the requirements of UL 864.

1.1 Basic System Overview

The 6808 is an addressable panel with a built-in annunciator that can also be used to program the system.

1.1.1 Hardware Features

- The basic 6808 panel contains one built in signaling line circuit (SLC), which supports up to 99 SK sensors and 99 SK modules or 127 SD SLC devices.
- 6.0A of output power is available through 4 sets of terminals for notification appliance circuits or auxiliary applications. Each circuit is power-limited per UL 864 and can source up to 3.0A (total output power for all 4 circuits must not exceed 6.0A). The constant auxiliary power load must not exceed 3A for normal standby.
- Built-in dual phone line, digital alarm communicator/transmitter (DACT), IP or optional cellular technologies.
- Reports events to central station by point or by zone.
- UL Listed for pre-action and deluge releasing systems.
- Two general purpose Form C programmable relays.
- One Form C Trouble Relay.
- Can be used with up to 12 model 5860, 6855, or 6860 remote annunciators in any combination (sold separately).
- Can be used with model 5865-3, 5865-4, and 5880 in any combination for a total of eight devices on one control panel. See Section 4.11 and Section 4.12 for additional information on these models.
- Printing of event log available through the Model 5824 serial/parallel printer interface module.
- 250 software zones, 250 output groups.
- Add six Flexput circuits with each 5895XL power supply.
- Add four NAC circuits with each 5496 NAC expander.

NOTE: The system can include a maximum of 8intelligent power modules, 5496 or 5895XL, combined.

1.1.2 Network System Hardware Features

- The default common communications link setup can contain up to 17- 6808 panels connected.
- Common communications link support for up to 17 sites
- Each building is referred to as a “site”.
- Panels can be interconnected using a CLASS B or CLASS A topology.
- To network panels together use the SK-NIC network card. Copper wire or fiber-optic cable panel connectivity can be used within the same networked system.
- The common communication and annunciation architecture allows a designated panel to be the communicator for all the panels in the link.

1.1.3 Software Features

- Advanced smoke detector features:
  - Automatic drift compensation
  - Automatic day/night sensitivity adjustment
  - Maintenance alert region
  - Point status meets calibrated smoke test requirements for NFPA 72
- “JumpStart” feature for easy programming
- Non-volatile event history stores 1000 events
- A choice of output patterns available for notification outputs, including ANSI 3.41 temporal signal
- Built-in synchronization appliance support for AMSECO®, Gentex®, System Sensor®, and Wheelock®

1.1.4 Terms Used in this Manual

The following terminology is used with the 6808 system:

Term	Description
SLC	Signaling Line Circuit
Module	The term module is used for all hardware devices except for SLC addressable devices and notification appliances. This includes the 6808 panel itself.
Input Point	An addressable sensing device, such as a smoke or heat detector or a contact monitor device.
Input Zone	A protected area made up of input points.
Output Point (or Output Circuit)	A notification point or circuit for notification appliances. Relay circuits and auxiliary power circuits are also considered output points.
Output Group (OPG)	A group of output points. Operating characteristics are common to all output points in the group.
Output (or “Cadence”) Pattern	The pattern that the output will use, for example, Constant, March Code, ANSI 3.41. Applies to zones and special system events. See Appendix C for additional information.

Term	Description
Mapping	Mapping is the process of specifying which outputs are activated when certain events occur in the system. Section 7.2 explains mapping in detail.
Common Communication Link	Up to 17 panels can be linked. Consist of any combination of 17 panels of these model numbers: 6700, 6808, 6820 / 6820EVS. For reporting purposes only. Not a peer-to-peer networked system.
SWIFT	Smart Wireless Integrated Fire Technology

1.2 Compatible Products

The chart below lists the products available from Honeywell for use with the 6808

Type of Device	Model	Description	
SWIFT Wireless SLC Devices	For a list of compatible devices, refer to the *Device Compatibility Document.*		
SK Addressable SLC Devices			
SD Addressable SLC Devices			
Other Modules	5824 Serial/Parallel Printer Interface Module	Allows a printer to be attached for the system for on-site event logging. Four maximum per system.	
	5895XL (Rev F or higher) Intelligent Power Supply	Provides additional power, six Flexput circuits, and two Form C relays.	5895XL and 5496 modules can be used in any combination, up to a total of 8 on one system.
	5496 (Rev F or above) NAC Expander	Add 4 Notification/Auxiliary power circuits with each 5496 Intelligent Power Module	
	6860 Remote LCD Annunciator	4x 40 Remote LCD annunciator, can be used in any combination, up to a total of 12 devices on one panel.	
	6855 Remote LCD Annunciator	4 x 20 Remote LCD annunciator, can be used in any combination, up to a total of 12 devices on one panel.	
	5860 Remote LCD Annunciator	4 x 20 Remote LCD annunciator, can be used in any combination, up to a total of 12 devices on one panel.	
	5860TG and 5860TR Trim Ring Kits	trim ring kits for surface mounting the 5860 annunciator. 5860TG is gray; 5860TR is red.	
	5865-3 and 5865-4 LED Annunciator	LED annunciator can display up to 30 LEDs (15 red and 15 yellow). 5865-4 has key switches for silence and reset, and a system trouble LED.	5865-3, 5865-4, and 5880 can be used in any combination, up to a total of eight devices on one panel.
	5880 (Rev C or above) LED I/O Module	Driver for up to 40 LEDs. Interfaces with customized annunciator boards. In addition the 5880 has eight generic switch input points.	
	5883 General Purpose Relay Module	Provides 10 Form C relays. Designed to be driven by the 5880. Up to four, 5883 modules can be used with each 5880 module.	
	SK-NIC	Network Interface Card	Refer to LS10172-001SK-E
Wireless	WSK-WGI	Wireless Gateway	Refer to the *SWIFT Wireless Installation Manual* P/N LS10036-000SK-E for more information on these accessories.
	WSK-PHOTO	Wireless Photoelectric Smoke Detector with 4” base	
	WSK-PHOTO-T	Wireless photo/heat detector with 4" base	
	WSK-HEAT-ROR	Wireless Rate of Rise Heat Detector with 4” base	
	WSK-HEAT	Wireless 135° Fixed Heat Detector with 4” base	
	WSK-MONITOR	Wireless Addressable Monitor Module	
	WSK-REALY	Wireless Addressable Relay Module	
Miscellaneous	HFSS Honeywell Fire Software Suite	For communication and panel programming with a Windows-based computer. Enables remote viewing of detector status and event history.	
	7860 Telephone Cord	RJ31X cord for connecting a phone line to the 6808.	
	RBB	Remote Battery Box for mounting backup batteries that are too large to fit into the main control panel cabinet. Dimensions: 16" W x 10" H x 6" D (40.64 cm W x 25.4 cm H x 15.24 cm D).	
	CELL-MOD	Cellular board with Plastic Enclosure	Refer to LS10182-001SK-E
	CELL-CAB-SK	Cellular board with Metal Enclosure, lock & key	

Table 1.1 6808 Compatible Products

1.3 Related Documentation

Refer to the following documents for more information.

Title	Document Number
SLC Wiring Manual	LS10179-000SK-E
Device Compatibility Document	LS10167-004SK-E
5496 NAC Expander Manual	151276-L8
5824 Printer Interface Module Install Sheet	151392
5895XL Power Supply Manual	151142-L8
5865-3/4 Annunciator Install Sheet	151088
5880 LED Driver Install Sheet	150972
5883 Relay Module Install Sheet	151194
5860 Annunciator Install Sheet	151042
6855 Annunciator Install Sheet	LS10175-001SK-E
6860 Annunciator Install Sheet	LS10174-001SK-E
SK-NIC Network Card Install Sheet	LS10172-001SK-E
SK-FML/FSL Install Sheet	LS10178-001SK-E
MRD-1 Releasing Disconnect	LS10231-000GE-E

Table 1.2 Related Documentation

Section 2: Agency Listings, Approvals, and Requirements

2.1 Federal Communications Commission (FCC)

The following information must be provided to the telephone company before the 6808 can be connected to the phone lines:

Manufacturer:	Honeywell Silent Knight
Model Number:	6808
FCC registration number:	US: HS9AL10A2100
Ringer equivalence:	1.0A
Type of jack:	RJ31X
Facility Interface Codes:	Loop Start: 02LS2
Service Order Code:	9.0F

This equipment complies with Part 68 of the FCC rules and the requirements adopted by ACTA. On the inside cover of this equipment is a label that contains, among other information, a product identifier. If requested, this information must be provided to the telephone company.

A plug and jack used to connect this equipment to the premises wiring and telephone network must comply with the applicable FCC Part 68 rules and requirements adopted by the ACTA. A compliant telephone cord (not provided) and modular jack must be utilized with this product. It is designed to be used with a modular jack that is also compliant.

The REN (ringer equivalence number) provided on this installation sheet is used to determine the number of devices that may be connected to the public switched telephone network. This number must not exceed 5.0. Since this product has an REN of 1.0A, the number of devices is limited. The REN number is embedded in the FCC registration number as 10A.

If the 6808 causes harm to the telephone network, the telephone company will notify you in advance that the temporarily discontinuance of service may be required. But if advance notice is not practical, the telephone company will notify the customer as soon as possible. Also, you will be advised of your right to file a complaint with the FCC if you believe it is necessary.

The telephone company may make changes in its facilities, equipment, operations or procedures that could affect the operation of the equipment. If this happens the telephone company will provide advance notice in order for you to make necessary modifications to maintain uninterrupted service.

If trouble is experienced with the 6808, for repair or warranty information, please contact customer service at 800.446.6444 or www.silentknight.com. If the equipment is causing harm to the telephone network, the telephone company may request that you disconnect the 6808 until the problem has been resolved.

This product cannot be adjusted or repaired in the field. It must be returned to the factory for service.

This equipment is not designed for use with party line service. Connection to party line service is subject to state tariffs. You may contact the state public utility commission, public service commission or corporation commission for information.

Since the 6808 is a commercial fire alarm panel, it must be connected upstream of all other equipment utilizing the phone lines. If you have questions about the installation, contact your telephone company or a qualified installer.

CAUTION: INSTALLATION AND TEST

TO ENSURE PROPER OPERATION, THIS EQUIPMENT MUST BE INSTALLED ACCORDING TO THE ENCLOSED INSTALLATION INSTRUCTIONS. TO VERIFY THAT THE EQUIPMENT IS OPERATING PROPERLY AND CAN SUCCESSFULLY REPORT AN ALARM, THIS EQUIPMENT MUST BE TESTED IMMEDIATELY AFTER INSTALLATION, AND PERIODICALLY THEREAFTER, ACCORDING TO THE ENCLOSED TEST INSTRUCTIONS.

CAUTION: LINE IN USE

IN ORDER FOR “ALARM DIALING EQUIPMENT” TO BE ABLE TO SEIZE THE PHONE LINE TO REPORT AN ALARM OR OTHER EVENT WHEN OTHER CUSTOMER EQUIPMENT (TELEPHONE, ANSWERING SYSTEM, COMPUTER MODEM, ETC.) CONNECTED TO THE SAME LINE IS IN USE, “ALARM DIALING EQUIPMENT” MUST BE CONNECTED TO A PROPERLY INSTALLED RJ31X JACK. THE RJ31X JACK MUST BE CONNECTED IN SERIES WITH, AND AHEAD OF, ALL OTHER EQUIPMENT ATTACHED TO THE SAME PHONE LINE. SERIES INSTALLATION OF AN RJ31X JACK IS DEPICTED IN THE FIGURE BELOW. IF YOU HAVE ANY QUESTIONS CONCERNING THESE INSTRUCTIONS, CONSULT YOUR TELEPHONE COMPANY OR A QUALIFIED INSTALLER ABOUT INSTALLING THE NECESSARY JACK AND ALARM DIALING EQUIPMENT.

2.2 Underwriters Laboratories (UL)

2.2.1 Requirements for All Installations

General requirements are described in this section. When installing an individual device, refer to the specific section of the manual for additional requirements. The following subsections list specific requirements for each type of installation (for example, Central Station Fire Alarm systems, Local Protected Fire Alarm systems, and so on). See Section 9.5 for information on releasing operations.

1. All field wiring must be installed in accordance with the NFPA 70 National Electric Code.
2. Use addressable smoke detectors specified in the *SLC Wiring Manual* (P/N: LS10179-000SK-E and/or the conventional detectors listed in the *Device Compatibility Document* (P/N: LS10167-004SK-E).
3. Use UL listed notification appliances compatible with the 6808 from those specified in the *Device Compatibility Document* (P/N: LS10167-004SK-E).
4. A full system checkout must be performed any time the panel is programmed.

Restricted Options

- The loss of AC signal is defaulted to 3-hours however the system allows settings from 0 - 3 hours. For UL certified installations, this number must be set from 1 to 3 hours.
- The system allows the use of non-latching spot type smoke detectors. This feature may not be used in commercial applications whereby a general alarm is sounded. It is intended for elevator recall, door holding applications, and hotel/motel room applications.
- The system allows the Alarm Verification time to be set from 60 to 250 seconds. For UL certified installations, the setting must be a minimum of 60 seconds.
- The system allows the Auto-resound time to be set to 24 or 4 hours. For UL certified installations that are utilizing SWIFT devices, the value must be set to 4 hours.
- Call forwarding shall not be used.
- When the two-count feature is used, detector spacing shall be cut in half, you shall not use the Alarm Verification feature, and no delay shall be used.
- P.A.S (Positive Alarm Sequence) feature shall be used only with automatic detectors.

2.2.2 UL 864 9th and 10th Edition

- Per the UL Continuing Certification Program, UL 864 9th edition fire alarm control equipment will retain certification after the roll-out of UL 10th edition (12/2/2018).
- Installations of UL 864 10th Edition certified equipment are permitted to use UL864 9th Edition certified equipment when approved by the local Authority Having Jurisdiction (AHJ).

For product compliance, refer to the UL/ULC listing cards located on the UL online certification directory. https://iq.ulprospector.com

2.2.3 Requirements for Central Station Fire Alarm Systems

1. Use both phone lines. Enable phone line monitors for both lines.
2. You must program a phone number and a test time so that the 6808 shall automatically initiate and complete a test signal transmission sequence to its associated receiver at least once every 6 hours, using two phones or one phone line with Ethernet/cellular backup. The AC Loss Hours option must be set from 1-3 hours.
3. If using wired Ethernet or cellular, you must program the corresponding Account/Subscriber ID and a test time so that the FACP shall automatically initiate a Test Signal Transmission sequence to its associated receiver at least once every 6 hours.

   The Automatic 6 hour Test Signal Transmission only applies if the secondary communication paths are utilized. If no secondary communication paths are utilized, the FACP shall automatically initiate a Test Signal Transmission sequence to associate the receiver at least once every 60 minutes.

2.2.4 Requirements for Local Protected Fire Alarm Systems

At least one UL listed supervised notification appliance must be used.

2.2.5 Requirements for Remote Station Protected Fire Alarm Systems

Minimum system requirements are one Silent Knight addressable initiating device and either a 5220, Keltron 3158 or the built-in Digital Alarm Communicator Transmitter (DACT).

1. Do not exceed the current load restrictions shown in Section 3.5.4.
2. The AC Loss Hours option must be set from 1-3 hours.

2.2.6 Requirements for the Installation of Carbon Monoxide (CO) Detection and Warning Equipment, NFPA 720

When using carbon monoxide detection the system must be monitored by a Supervising Station with emergency response, both aspects meeting the Standard for the Installation of Carbon Monoxide (CO) Detection and Warning Equipment, NFPA 720.

2.2.7 NFPA Requirements

The following is the minimum configuration to meet the NFPA requirements.

Model/Module	Description	Local	Releasing	Remote Station	Auxiliary	Central Station	Emergency Signaling
6808	Control Unit	Y	Y	Y	Y	Y	Y
RA-100BD	4 x 20 display	Y	Y	Y	Y	Y	Y
SK-NIC	Network card	O	O	O	O	O	O
SK-FML/ -FSL	Fiber module	O	O	O	O	O	O
7644-L8	Pol Rev device	N	N	Y	N	N	N
5220	City tie, Pol. Rev Device	N	N	Y	Y	N	N
Keltron 3158	Reverse Polarity Module	N	N	Y	Y	N	N
CELL-MOD/CELL-CAB-SK	Cellular transmitter	N	N	Y[1]	N	Y[1]	N
HWF2A-COM/HWF2V-COM	Fire Communicators	N	N	Y[1]	N	Y[1]	N
Y = YES, N = NO, O = OPTIONAL							

Table 2.1 NFPA Requirements for 6808

1 You must choose either the CELL-MOD, CELL-CAB'-SK, HWF2A-COM, or HWF2V-COM for the Remote Station and Central Station.

Notes

Section 3: Prerequisites for Installation

This section of the manual is intended to help you plan your tasks to facilitate a smooth installation. Please read this section thoroughly, especially if you are installing a 6808 panel for the first time.

3.1 Inventory

When a 6808 shipment is received, check that all the parts have been included in the shipment. The shipment consist of one of each of the following:

- main circuit board with display
- backbox with door.
- plastic bag containing two keys, screws, cables, and ten 4.7k ohm end-of-line resistors.
- manual

3.2 Environmental Specifications

It is important to protect the 6808 control panel from water. To prevent water damage, the following conditions should be followed when you install the units:

- Mount indoors in dry locations only
- Do not mount directly on exterior walls, especially masonry walls (condensation)
- Do not mount directly on exterior walls below grade (condensation)
- Protect from plumbing leaks
- Protect from splash caused by sprinkler system inspection ports
- Do not mount in areas with humidity-generating equipment (such as dryers, production machinery)

When selecting a location to mount the 6808 control panel, the unit should be mounted where it will NOT be exposed to temperatures outside the range of 32°F-120°F (0°C-49°C) or humidity outside the range of 10%-93% at 86°F (30°C) non-condensing.

3.3 Software Downloads

In order to supply the latest features and functionality in fire alarm and life safety technology to our customers, we make frequent upgrades to the embedded software in our products. To ensure that you are installing and programming the latest features, we strongly recommend that you download the most current version of software for each product prior to commissioning any system. Contact Technical Support with any questions about software and the appropriate version for a specific application. Software updates can be found at www.silentknight.com

3.4 Electrical Specifications

Table 3.1 lists the terminal block on the 6808 and a description of the each individual terminal and their respective electrical rating.

Terminal No.	Label		Description	Rating	
	Group	Individual		Voltage	Current
Terminal Block 1	TELCO 1	RING	Phone Line 1 Telco Ring		
		TIP	Phone Line 1 Telco Tip		
	PHONE 1	RING	Phone Line 1 Phone Ring		
		TIP	Phone Line 1 Phone Tip		
	TELCO 2	RING	Phone Line 2 Telco Ring		
		TIP	Phone Line 2 Telco Tip		
	PHONE 2	RING	Phone Line 2 Phone Ring		
		TIP	Phone Line 2 Phone Tip		
Terminal Block 2	SLC IN	–	Used for Class A installations	32 VDC	150 mA
		+			
	SLC OUT	–	SLC terminals	32 VDC	150 mA
		+			
	SLC PROG	–	Used for programming SLC Detectors	32 VDC	150 mA
		+			
Terminal Block 3	SBUS Out	B	SBUS Communication	5 VDC	100 mA
		A			
		+	SBUS Power	24 VDC	1.0 A
		–			
Terminal Block 4	BATTERY	+	To Positive battery terminal	24 VDC	Up to 35 Ah (See Section 4.5 for details.)
		–	To Negative battery terminal		

Table 3.1 Terminal Descriptions and Electrical Specifications

Terminal No.	Label		Description	Rating	
	Group	Individual		Voltage	Current
Terminal Block 5	AC INPUT	B	AC input (hot)	120 VAC, 60 Hz	3.3 A
		Earth	Earth Ground	N/A	N/A
		W	AC input (neutral)	120 VAC, 60 Hz	3.3 A
Terminal Block 6	TROUBLE	NC	Normally closed relay contact	24 VDC	2.5 A, resistive
		COM	Common terminal		
		NO	Normally open relay contact		
	RELAY 1	NC	Normally closed relay contact	24 VDC	2.5 A, resistive
		COM	Common terminal		
		NO	Normally open relay contact		
	RELAY 2	NC	Normally closed relay contact	24 VDC	2.5 A, resistive
		COM	Common terminal		
		NO	Normally open relay contact		
	NAC1[1]	–	Notification Appliance Circuit/Auxiliary power	24 VDC	3.0 Amp NAC or Aux power
		+			
	NAC2[1]	–	Notification Appliance Circuit/Auxiliary power	24 VDC	3.0 Amp NAC or Aux power
		+			
	NAC3[1]	–	Notification Appliance Circuit/Auxiliary power	24 VDC	3.0 Amp NAC or Aux power
		+			
	NAC4[1]	–	Notification Appliance Circuit/Auxiliary power	24 VDC	3.0 Amp NAC or Aux power
		+			
P8	EXT. Comm Cellular Connection	B	Cellular Transmitter		0Ω
		A			
		S+		55 mA, 95 mA	
		S-			
P10	Data Network		Used for SK-NIC	24 VDC	21 mA

Table 3.1 Terminal Descriptions and Electrical Specifications (Continued)

1 Regulated/special application when used for releasing

3.5 Calculating Current Draw and Standby Battery

This section contains instructions and tables for calculating current draws and standby battery needs.

3.5.1 Worksheet Requirements

The following steps must be taken when determining 6808 current draw and standby battery requirements.

1. For the 6808, the worst case current draw is listed for the panel, addressable devices, and SLC expanders. Fill in the number of addressable devices and expanders that will be used in the system and compute the current draw requirements for alarm and standby.
2. Add up the current draw for all auxiliary devices and record in the table at Line B.
3. Add up all notification appliance loads and record in the table at Line C.
4. For notification appliances and auxiliary devices not mentioned in the manual, refer to the device manual for the current ratings.
5. Make sure that the total alarm current calculated, including current for the panel itself, does not exceed 6.0 A. This is the maximum alarm current allowable.

   If the current is above 6.0A, you will need to use a notification power expander(s) such as, the 5496 NAC Expander. Use the expander(s) to distribute the power loads, so that the 6808 or the power expanders do not exceed their power rating.

   Refer to the Current Draw Worksheets provided with the *5496 Manual* to identify the ratings that do not exceed their power requirements.
6. Alternatively, you may network the additional 6808to get additional power.
7. Complete the remaining instructions in the appropriate Current Draw Worksheet for determining battery size requirements.

3.5.2 Current Draw Worksheet for SK SLC Devices

Use Table 3.2 to determine the current requirements during the alarm/battery standby operation when SK SLC devices are installed. You can install up to 198 SLC devices, consisting of any combination of sensors and modules.

Device	# of Devices	Current per Device			Standby Current	Alarm Current
For each device, use this formula:	This column	X	This column	=	Current per number of devices.	
Fire Panel (Current draw from battery)	1	Standby		190 mA	190 mA	
		Alarm:		250 mA		250 mA[1]
Addressable SLC Detectors						
SK-PHOTO		Standby: Alarm:		0.3 mA 6.5 mA[2]	mA	mA
SK-PHOTO-T					mA	mA
SK-PHOTO-R					mA	mA
SK-HEAT					mA	mA
SK-HEAT-HT					mA	mA
SK-HEAT-ROR					mA	mA
SK-ACCLIMATE					mA	mA
SK-PHOTO-W		Standby: Alarm:		0.2 mA 4.5 mA[2]	mA	mA
SK-PHOTO-T-W					mA	mA
SK-PHOTO-R-W					mA	mA
SK-HEAT-W					mA	mA
SK-HEAT-HT-W					mA	mA
SK-HEAT-ROR-W					mA	mA
SK-PHOTO-CO-W					mA	mA
SK-CO-W					mA	mA
SK-BEAM (without integral test)		SLC	Standby/Alarm:	2 mA	mA	mA
		Aux. Pwr	Standby:	2 mA	mA	
			Alarm:	8.5 mA		mA
SK-BEAM-T[3] (with integral test)		SLC	Standby/Alarm:	2 mA	mA	mA
		Aux. Pwr	Standby:	2 mA	mA	
			Alarm:	8.5 mA		mA
OSI-RI-SK		SLC	Standby/Alarm:	20 mA	mA	mA
		Aux. Pwr	Standby:	22 mA	mA	
			Alarm:	20 mA		mA
SK-FIRE-CO		SLC	Standby:	0.30 mA	mA	
			Alarm:	7 mA		mA
SK-FIRE-CO-W		SLC	Standby:	0.20 mA	mA	
			Alarm:	4.5 mA		mA
SK-PTIR-W		SLC	Standby:	0.20 mA	mA	
			Alarm:	4.5 mA		mA
Addressable SLC Modules						
SK-MONITOR		Standby/Alarm		0.375 mA	mA	mA
SK-MINIMON		Standby/Alarm		0.375 mA	mA	mA
SK-PULL-SA/SK-PULL-DA		Standby/Alarm		0.3 mA	mA	mA
SK-MONITOR-2		Standby/Alarm:		0.75 mA	mA	mA
SK-MONITOR-10		Standby/Alarm:		3.5 mA	mA	mA
SK-CONTROL		SLC	Standby	0.375 mA	mA	
			Alarm:	0.375 mA		mA
		Aux Pwr	Standby	1.7 mA	mA	
			Alarm:	6.5mA		mA

Table 3.2 Current Draw Worksheet for SK SLC Devices

Device	# of Devices	Current per Device			Standby Current	Alarm Current
SK-CONTROL-6		SLC	Standby	2.65 mA	mA	
			Alarm:	35 mA		mA
		Aux Pwr	Standby	8 mA	mA	
			Alarm:	20 mA		mA
SK-RELAY		Standby/Alarm:		0.255 mA	mA	mA
SK-RELAY-6		Standby:		1.9 mA	mA	
		Alarm:		32 mA		mA
SK-RELAYMON-2		Standby:		1.3 mA	mA	
		Alarm:		24 mA		mA
SK-ZONE		Aux Pwr	Standby	12 mA	mA	
			Alarm:	90 mA		mA
		SLC	Standby:	0.27 mA	mA	
			Alarm:	5.1 mA		
SK-ZONE-6		Aux Pwr	Standby	50 mA	mA	
			Alarm:	70 mA		mA
		SLC	Standby	2.3 mA	mA	
			Alarm:	40 mA		mA
SLC Accessories						
B200SR/-W/-IV Sounder Base		Aux Pwr	Standby:	0.5 mA	mA	
			Alarm:	35 mA		mA
		SLC	Standby	0.3 mA	mA	
B200S/-W/-IV Intelligent Sounder Base		Aux Pwr	Standby:	0.5 mA	mA	
			Alarm: (high vol)	35 mA		mA
		SLC	Standby	0.3 mA	mA	
B200SR-LF/-W/-IV Low Frequency Sounder Base		Aux Pwr	Standby:	1 mA	mA	
			Alarm:	125 mA		mA
B200S-LF/-W/-IV Intelligent Low Frequency Sounder Base		Aux Pwr	Standby	0.55 mA	mA	
			Alarm (high vol)	140 mA		mA
		SLC	Standby	0.30 mA	mA	
B224RB/-W/-IV Relay Base		Standby/Alarm:		0.17 mA	mA	mA
RTS151		Alarm:		10 mA		mA
RTS151KEY		Alarm:		12 mA		mA
RA100Z		Alarm:		10 mA		mA
SLC Isolator Devices						
SK-ISO (Isolator Module)		Standby:		0.45 mA	mA	mA
		Isolation:		17 mA		
ISO-6 (6 Fault Isolator Module)		Standby: (per circuit)		0.45 mA	mA	
		Isolation: (per circuit)		17 mA		mA
B224BI/-W/-IV Isolator Base		Standby:		0.45 mA	mA	
		Isolation:		15 mA		mA
Accessories Modules[4]						
6815 SLC Loop Expander		Standby:		78 mA	mA	
		Alarm:		78 mA		mA
6860 Remote LCD Annunciator		Standby:		35 mA	mA	
		Alarm:		53 mA		mA
5860 Remote LCD Annunciator		Standby:		58 mA	mA	
		Alarm:		68 mA		mA
6855 Remote LCD Annunciator		Standby:		59 mA	mA	
		Alarm:		92 mA		mA

Table 3.2 Current Draw Worksheet for SK SLC Devices (Continued)

	Device	# of Devices	Current per Device		Standby Current	Alarm Current
	5824 Serial/Parallel Module		Standby/Alarm:	45 mA	mA	mA
	5496 NAC Expander		Standby/Alarm (SBUS):	10 mA	mA	mA
	5895XL Power Supply		Standby/Alarm (SBUS):	10 mA	mA	mA
	5865-4 LED Annunciator (with reset and silence switches)		Standby:	35 mA	mA	
			Alarm:	145 mA		mA
	5865-3 LED Annunciator Module		Standby:	35 mA	mA	
			Alarm:	145 mA		mA
	5880 LED I/O Module		Standby:	35 mA	mA	
			Alarm:	200 mA		mA
	5883 Relay Interface		Standby:	0 mA	mA	
			Alarm: (22 mA/relay)	220 mA		mA
	Network Cards					
	SK-NIC Network Interface Card		Standby/Alarm:	21 mA	mA	mA
	SK-FML Fiber Optic Multi Mode		Standby/Alarm:	53 mA	mA	mA
	SK-FSL Fiber Optic Single Mode		Standby/Alarm:	79 mA	mA	mA
	Wireless Modules					
	WSK-WGI Wireless Gateway		Max current using ext supply	40 mA	mA	mA
			Max current SLC Power	24 mA	mA	mA
A	Total System Current					
	Auxiliary Devices	Refer to devices manual for current rating				
	IPDACT-2 IP Communicator		Standby:	93 mA	mA	
			Alarm:	136 mA		mA
	IPDACT-2UD IP Communicator		Standby:	98 mA	mA	
			Alarm:	155 mA		mA
	CELL-MOD/CELL-CAB-SK		Standby:	55 mA	mA	
			Alarm:	100 mA		mA
	HWF2-COM Series		Standby:	210 mA	mA	
			Alarm:	290 mA		mA
			Alarm/Standby:	mA	mA	mA
			Alarm/Standby:	mA	mA	mA
B	Auxiliary Devices Current[5]					
	Notification Devices	Refer to device manual for current rating				
	5495/5499 Power Supply		Standby:	75 mA		mA
			Alarm:	205 mA		mA
			Alarm:	mA		mA
			Alarm:	mA		mA
			Alarm:	mA		mA
C	Notification Appliances Current					mA
D	Total current ratings of all devices in system (line A + line B + C)				mA	mA
E	Total current ratings converted to amperes (line D x 0.001):				A	A
F	Number of standby hours				H	
G	Multiply lines E and F.			**Total standby AH**	AH	
H	Alarm sounding period in hours. (For example, 5 minutes = 0.0833 hours)					H
I	Multiply lines E and H.			Total alarm AH		AH
J	Add lines G and I.				AH	
	Multiply by the Derating Factor				1.25	
	Total ampere hours required[6]				AH	

Table 3.2 Current Draw Worksheet for SK SLC Devices (Continued)

1 The FACP can only support 5 devices with LEDs on. The current draw has been added to the panels alarm current.
2 Total does not include isolator devices or accessory bases.

3 The SK-BEAM-T draws a maximum of 500mA from auxiliary power when the test feature is used. This should be considered when determining auxiliary power capacity but not calculated into current requirements for everyday operation.
4 Maximum SBUS address capacity is determined by the amount of SBUS bandwidth consumed by each SBUS module. Refer to Section 4.6.2 for SBUS limitations.
5 If there are door holders in the system, there is no need to consider door holder current for alarm/battery standby, because power is removed during that time. However, during normal operation, door holders draw current and must be included in the 1.8 A total current that can be drawn from the panel.
6 Use next size battery with capacity greater than required.

3.5.3 Current Draw Worksheet for SD SLC Devices

Use Table 3.3 to determine current requirements during the alarm/battery standby operation when the SD SLC devices are installed. You can install up to 127 SD devices per panel, in any combination.

Device	# of Devices	Current per Device			Standby Current	Alarm Current
For each device, use this formula:	This column	X	This column		=	Current per number of devices.
Fire Panel (Current draw from battery)	1	Standby		190 mA	190 mA	
		Alarm:		250 mA		250 mA[1]
SD500-AIM		Standby/Alarm:		0.55 mA[2]	mA	mA
SD500-MIM					mA	mA
SD500-PS					mA	mA
SD500-ARM					mA	mA
SD505-HEAT					mA	mA
SD505-PHOTO					mA	mA
SD500-ANM		Aux. Pwr	Standby:	8 mA	mA	
			Alarm:	60 mA		mA
		SLC	Standby/Alarm:	0.55 mA	mA	mA
SD500-SDM		SLC	Standby/Alarm:	0.55 mA	mA	mA
		Aux. Pwr	Standby:	20 mA	mA	
			Alarm:	106 mA		mA
SLC Accessory Base						
SD505-6RB		Standby/Alarm:		0.082 mA	mA	mA
SD505-6SB		Aux. Pwr	Standby:	1 mA	mA	
			Alarm:	32 mA		mA
		SLC	Standby/Alarm:	0.082 mA	mA	mA
SD505-DUCTR		Aux. Pwr	Standby:	20 mA[3]	mA	
			Alarm:	62 mA[3]		mA
		SLC	Standby/Alarm:	0.5 mA	mA	mA
SD505-DTS-K			None, included with SD505-DUCTR worst case.			
SD505-DUCT		SLC	Standby/Alarm	0.5 mA	mA	mA
SLC Isolator Devices						
SD505-LIM		Standby/Alarm		0.092 mA	mA	mA
SD505-6IB						
Accessories Modules[4]						
5815XL SLC Expander		Standby/Alarm:		55 mA	mA	mA
6860 Remote LCD Annunciator		Standby:		35 mA	mA	
		Alarm:		53 mA		mA
5860 Remote LCD Annunciator		Standby:		58 mA	mA	
		Alarm:		68 mA		mA

Table 3.3 Current Calculation Worksheet for SD Devices

	Device	# of Devices	Current per Device		Standby Current	Alarm Current
	6855 Remote LCD Annunciator		Standby:	59 mA	mA	
			Alarm:	92 mA		mA
	5824 Serial/Parallel Module		Standby/Alarm:	45 mA	mA	mA
	5496 NAC Expander		Standby/Alarm (SBUS):	10 mA	mA	mA
	5895XL Power Supply		Standby/Alarm (SBUS):	10 mA	mA	mA
	5865-4 LED Annunciator (with reset and silence switches)		Standby:	35 mA	mA	
			Alarm:	145 mA		mA
	5865-3 LED Annunciator Module		Standby:	35 mA	mA	
			Alarm:	145 mA		mA
	5880 LED I/O Module		Standby:	35 mA	mA	
			Alarm:	200 mA		mA
	5883 Relay Interface		Standby:	0 mA	mA	
			Alarm: (22 mA/relay)	220 mA		mA
	Network Cards					
	SK-NIC Network Interface Card		Standby/Alarm:	21 mA	mA	mA
	SK-FML Fiber Optic Multi Mode		Standby/Alarm:	53 mA	mA	mA
	SK-FSL Fiber Optic Single Mode		Standby/Alarm:	79 mA	mA	mA
	Wireless Modules					
	WSK-WGI Wireless Gateway		Max current using ext supply	40 mA	mA	mA
			Max current SLC Power	24 mA	mA	mA
A	Total System Current					
	Auxiliary Devices[5]	Refer to devices manual for current rating				
	IPDACT-2 IP Communicator		Standby:	93 mA	mA	
			Alarm:	136 mA		mA
	IPDACT-2UD IP Communicator		Standby:	98 mA	mA	
			Alarm:	155 mA		mA
	CELL-MOD/CELL-CAB-SK		Standby:	55 mA	mA	
			Alarm:	100 mA		mA
	HWF2-COM Series		Standby:	210 mA	mA	
			Alarm:	290 mA		mA
			Alarm/Standby:	mA	mA	mA
			Alarm/Standby:	mA	mA	mA
B	Auxiliary Devices Current					
	Notification Devices	Refer to device manual for current rating				
	5495/5499 Power Supply		Standby:	75 mA		mA
			Alarm:	205 mA		mA
			Alarm:	mA		mA
			Alarm:	mA		mA
			Alarm:	mA		mA
C	Notification Appliances Current					mA
D	Total current ratings of all devices in system (line A + line B + C)				mA	mA
E	Total current ratings converted to amperes (line D x 0.001):				A	A
F	Number of standby hours				H	
G	Multiply lines E and F.			**Total standby AH**	AH	
H	Alarm sounding period in hours. (For example, 5 minutes = 0.0833 hours)					H
I	Multiply lines E and H.			Total alarm AH		AH
J	Add lines G and I.				AH	
	Multiply by the Derating Factor				1.25	
	Total ampere hours required[6]				AH	

Table 3.3 Current Calculation Worksheet for SD Devices (Continued)

1 The FACP can only support 5 devices with LEDs on. The current draw has been added to the panels alarm current.
2 Total does not include isolator devices or accessory bases
3 If using 24 VDC aux power only. No standby or alarm current is needed for battery calculation if using 24 VAC, 120 VAC, or 240 VAC.
4 Maximum SBUS address capacity is determined by the amount of SBUS bandwidth consumed by each SBUS module. Refer to Section 4.6.2 for SBUS limitations.
5 If using door holders, you do not need to consider door holder current for alarm/battery standby, because power is removed during that time. However, during normal operation, door holders draw current and must be included in the 1.0A total current that can be drawn from the panel.
6 Use next size battery with capacity greater than required.

3.5.4 Maximum Battery Standby Load

Table 3.4 and Table 3.5 show the standby load calculations for the 6808 based on 24 and 90 hours of standby. The standby load calculations of line D in the Current Draw Calculation Worksheet must be less than the number shown in Table 3.4 and Table 3.5 for the selected battery size, standby hour and alarm time. The numbers below have a built in 20% de-rating factor for the battery amp-hour capacity.

Rechargeable Battery Size	24 hr Standby, 5 mins. Alarm	24 hr Standby, 15 min alarm	24 hr Standby, 20 min alarm
17AH	535mA	473mA	442mA
18AH	569mA	506mA	475mA
24AH	769 mA	706mA	675mA
33AH	1.07A	1.01A	975mA
35AH	1.14A	1.07A	1.04A
40AH	1.30A	1.24A	1.21A
55AH	1.80A	1.74A	1.71A

Table 3.4 :Maximum Battery Standby Loads for 24 Hour Standby

Rechargeable Battery Size	90 hr Standby, 5 min alarm	90 hr Standby, 15 min alarm	90 hr Standby, 20 min alarm
33 AH	N/A	N/A	N/A
40 AH	347mA	331mA	322mA
55 AH	480mA	464mA	456mA

Table 3.5 Maximum Battery Standby Loads for 90 Hour Standby (FM Applications Only)

WARNING: BATTERY SIZE

SILENT KNIGHT DOES NOT SUPPORT THE USE OF BATTERIES SMALLER THAN THOSE LISTED IN TABLE 3.4 AND TABLE 3.5. IF YOU USE A BATTERY TOO SMALL FOR THE INSTALLATION, THE SYSTEM COULD OVERLOAD THE BATTERY RESULTING IN THE INSTALLATION HAVING LESS THAN THE REQUIRED 24 HOURS STANDBY POWER. USE TABLE 3.4 AND TABLE 3.5 TO CALCULATE THE CORRECT BATTERY AMP HOUR RATING NEEDED FOR YOUR INSTALLATION. IT IS RECOMMENDED THAT YOU REPLACE BATTERIES EVERY FIVE YEARS.

Section 4: Control Panel Installation

4.1 Mounting the Control Panel Cabinet

The 6808 cabinet can be surface or flush mounted. Cabinet base dimensions are 24.75"H x 14.5" W x 3.91"D. If you flush mount the cabinet, there should be 1.5" to 1.75" of cabinet extruding from the wall, this should be measured from either the top edge or bottom edge to the exterior side of the sheet rock. Do NOT flush mount in a wall designated as a fire break.

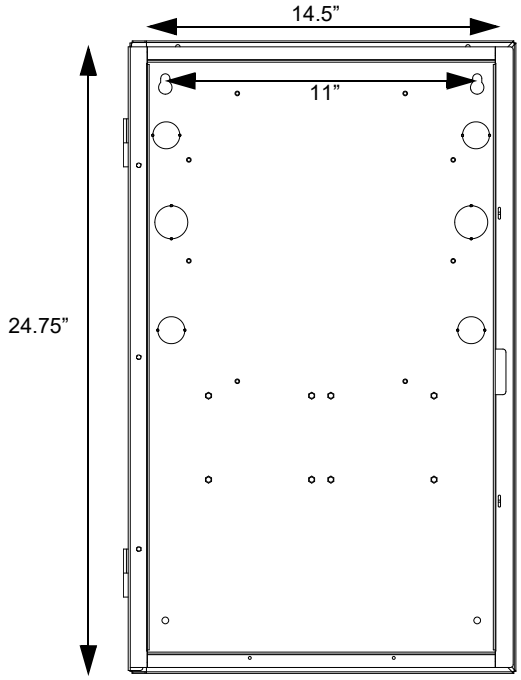

Figure 4.1 6808 Cabinet Dimensions

4.1.1 Preventing Water Damage

Water damage to the fire system can be caused by moisture entering the cabinet through the conduits. Conduits that are installed to enter the top of the cabinet are most likely to cause water problems. Installers should take reasonable precautions to prevent water from entering the cabinet. Water damage is not covered under warranty.

4.1.2 Removing the 6808 Assembly from the Housing

If it should ever be necessary to remove the control panel assembly from the cabinet for repair, do so by removing the screws that hold the control panel in to the cabinet. Do not attempt to disassemble the circuit boards.

4.1.3 Ethernet Connection

The Ethernet connection is used for IP communication. For port location, see the figure below.

4.2 Board Layout

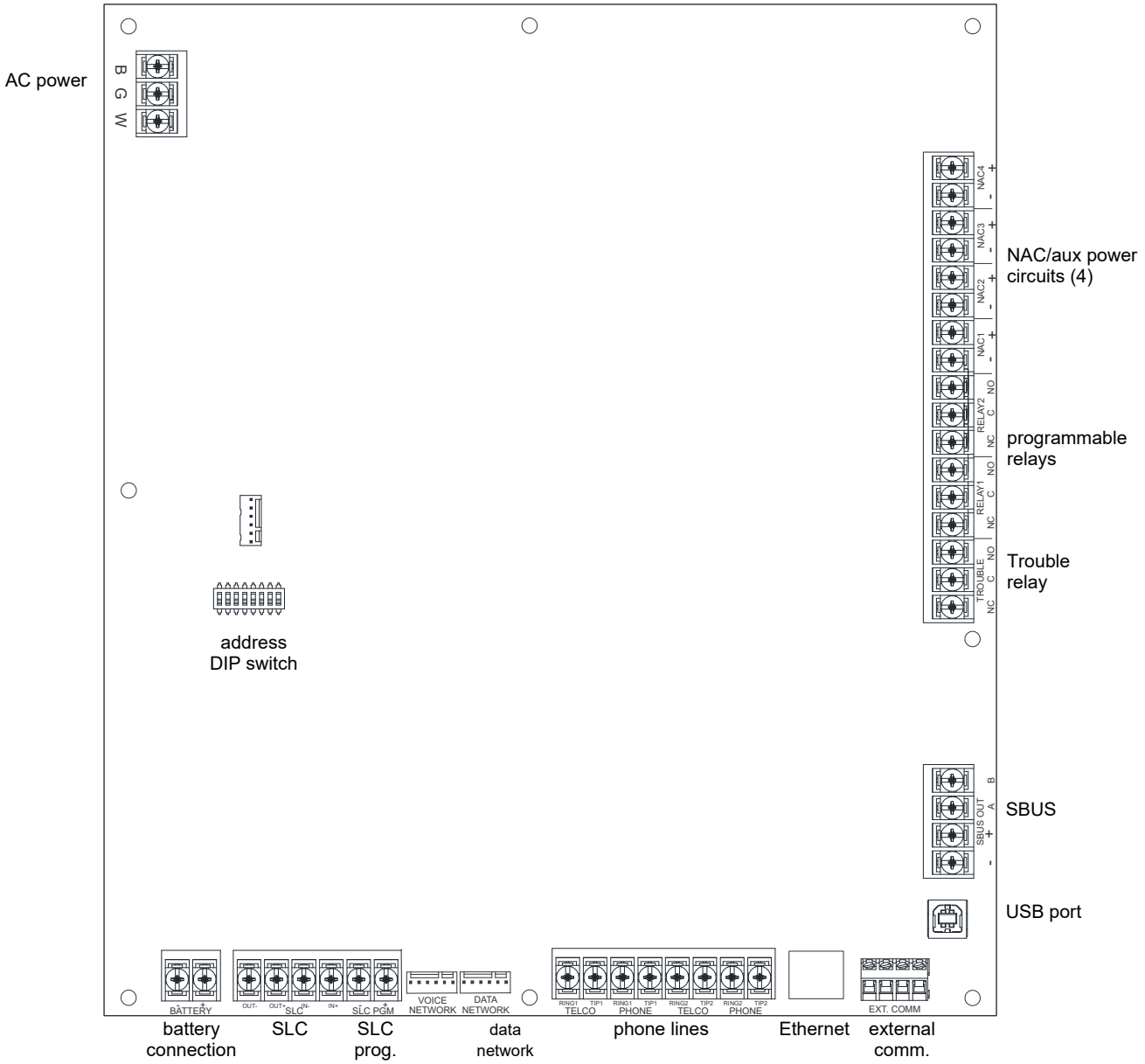

Figure 4.2 6808 Board Layout

Figure 4.2 shows the circuit board that attaches the 6808 assembly to the cabinet. If you should need to remove the board assembly for repair, remove the nine mounting screws (six on the main circuit board and three on the heat-sink) which hold the assembly in the cabinet. Then lift the entire assembly out of the cabinet.

4.3 Wiring Specifications

Induced noise (the transfer of electrical energy from one wire to another) can interfere with telephone communication or cause false alarms. To avoid the induced noise, follow these guidelines:

- Isolate the input wiring from the high current output and power wiring. Do not pull one multi-conductor cable for the entire panel. Instead, separate the wiring as follows:

High voltage:	AC power terminal
SLC loops:	SLC In/Out Terminals
POTS reporting input/output:	Phone line circuits, Ring Tip Telco, Phone Terminals
Notification circuits:	I/01-I/04Terminals
SBUS:	SBUS In Terminals, Cellular communication
Relay circuits:	Trouble, Relay 1, Relay 2 Terminals

Table 4.1 Wiring Specifications

- Do not pull wires from different groups through the same conduit. If you must run them together, do so for as short a distance as possible or use shielded cable. Connect the shield to earth ground at the panel. You must route high and low voltages separately.
- Route the wiring around the inside perimeter of the cabinet. It should not cross the circuit board where it could induce noise into the sensitive microelectronics or pick up unwanted RF noise from the high speed circuits. See Figure 4.3 for an example.
- High frequency noise, such as that produced by the inductive reactance of a speaker or bell, can also be reduced by running the wire through ferrite shield beads or by wrapping it around a ferrite toroid.

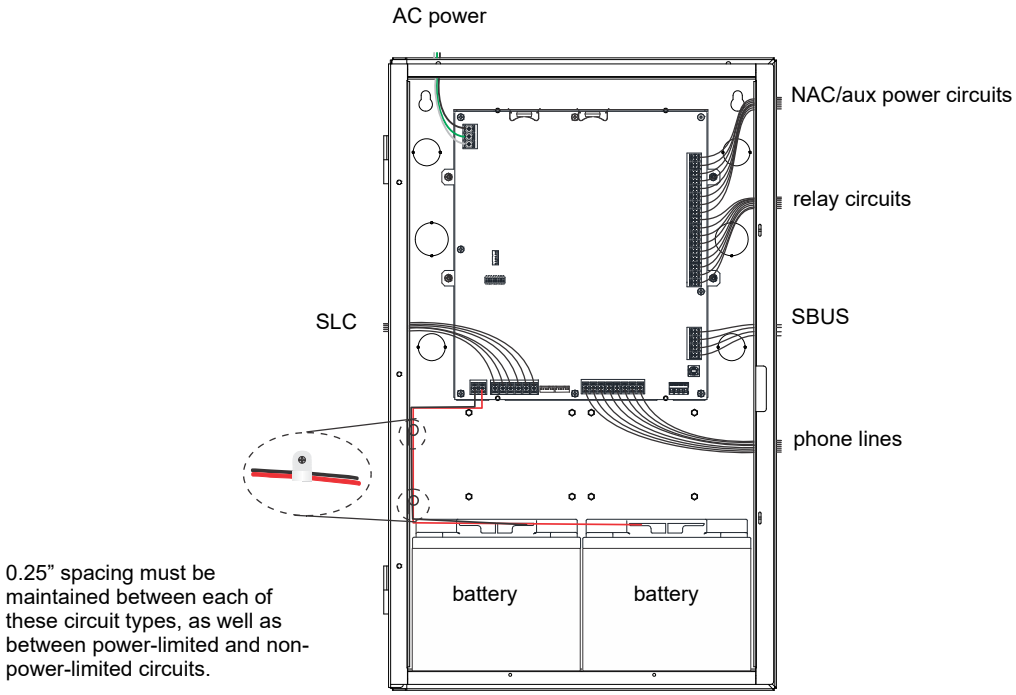

Figure 4.3 Wire Routing Example for 6808

4.4 AC Connection

At installation, connect the AC terminals to the power source as shown in Figure 4.4. It may be necessary for a professional electrician to make this connection.

WARNING: RISK OF ELECRICAL SHOCK AND EQUIPMENT DAMAGE

SEVERAL DIFFERENT SOURCES OF POWER CAN BE CONNECTED TO THIS PANEL. DISCONNECT ALL SOURCES OF POWER BEFORE SERVICING. THE PANEL AND ASSOCIATED EQUIPMENT MAY BE DAMAGED BY REMOVING AND/OR INSERTING CARDS, MODULES OR INTERCONNECTING CABLES WHILE THIS UNIT IS ENERGIZED.

The AC terminals are rated at 120 VAC, 60 Hz, 3.25A.

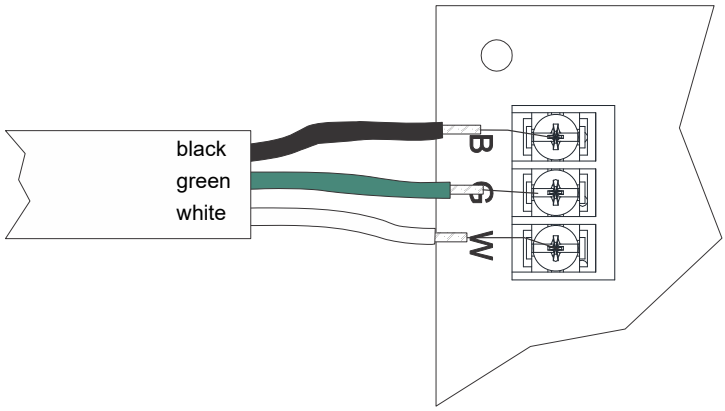

Figure 4.4 AC Power Connection

4.5 Battery Power

The batteries must be sealed lead acid type. Before connecting the batteries to the FACP, make certain that the interconnect cable between the batteries is not connected. Do not connect the battery jumper cable until the system is completely installed. Observe polarity when connecting the batteries.

WARNING: RISK OF PERSONAL INJURY

BATTERY CONTAINS SULFURIC ACID WHICH CAN CAUSE SEVERE BURNS TO THE SKIN AND EYES AND CAN DESTROY FABRICS. IF CONTACT IS MADE WITH SULFURIC ACID, IMMEDIATELY FLUSH THE SKIN OR EYES WITH WATER FOR 15 MINUTES AND SEEK IMMEDIATE MEDICAL ATTENTION.

The control panel battery charge capacity is 7.0 to 35 AH. The main control cabinet can house batteries up to 18 AH, larger capacity batteries can be housed in a RBB (see Section 4.5.1 for details). Use 12V batteries of the same AH rating. Determine the correct AH rating as per your current load calculation (see Section 3.5).

Wire batteries in series to produce a 24-volt equivalent. Do not parallel batteries to increase the AH rating. It is recommended that you replace batteries every five years.

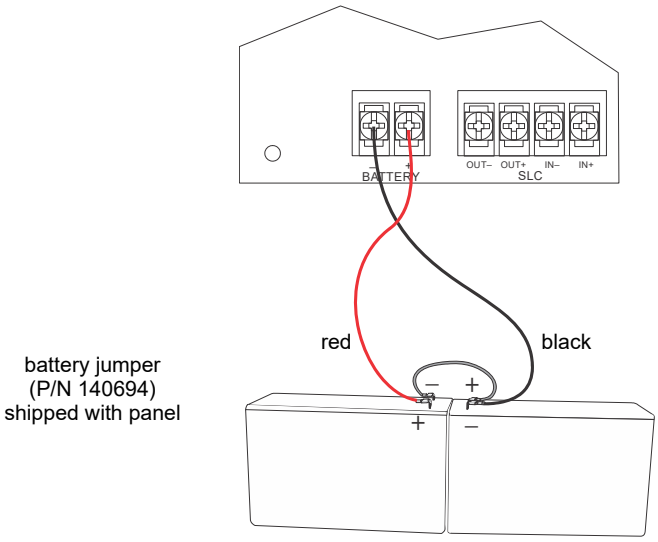

Figure 4.5 Battery Connection

4.5.1 RBB Accessory Cabinet

The RBB accessory cabinet can be used when your backup battery requirements use batteries that are too large to fit into the main control panel cabinet. The RBB cabinet holds up to the 35 AH batteries. RBB dimensions are 16" W x 10" H x 6" D (40.64 cm W x 25.4 cm H x 15.24 cm D).

Installing the RBB Accessory Cabinet and Batteries

To properly install the accessory cabinet and backup batteries, follow these steps:

To properly install the accessory cabinet and backup batteries, follow these steps:

1. Mount the accessory cabinet. See Figure 4.6 for the four cabinet mounting holes.
   - If mounting onto drywall the accessory cabinet must be mounted onto 3/4-inch plywood. This is necessary because the weight of the batteries inside the accessory cabinet could cause the cabinet to pull away from the drywall.
   - When mounting on concrete, especially when moisture is expected, attach a piece of 3/4-inch plywood to the concrete surface and then attach the RBB cabinet to the plywood.
   - If using the battery cable extenders provided (P/N 140643), mount the RBB cabinet no more than 18" away from the main control panel cabinet. This will ensure that the battery cables reach the battery terminals.

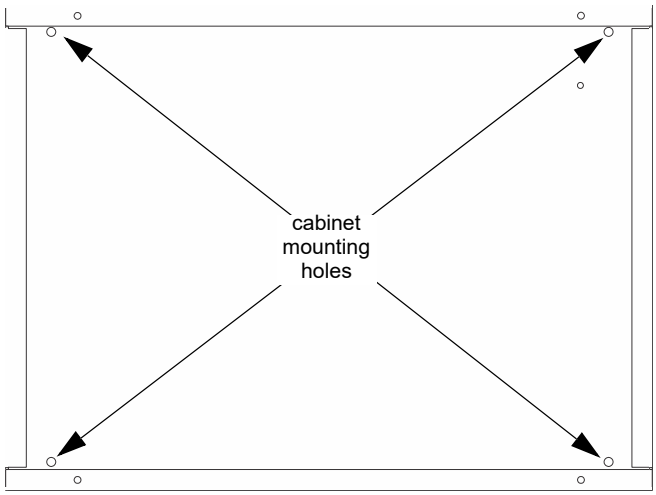

Figure 4.6 RBB Cabinet Mounting Holes

2. Connect the main control panel battery cables to the battery cable extenders as shown in Figure 4.7.

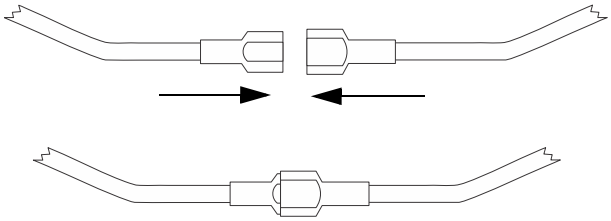

Figure 4.7 Splicing Control Panel Battery Cable to RBB Battery Cable Extenders

3. Run extended battery cable from control panel cabinet through conduit to RBB cabinet as shown below.
4. Connect battery leads to the backup battery terminals. Observe the proper polarity to prevent damage to the batteries or the control panel.
5. Insert the RBB cover screws into the cover mounting holes and screw down most of the way. Do not tighten.

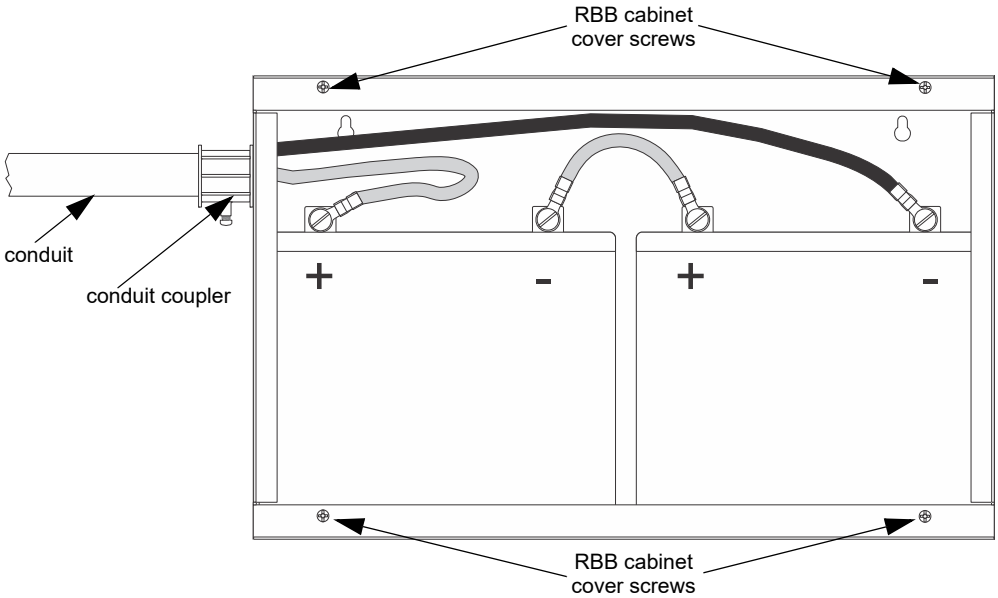

Figure 4.8 Battery Connections in the RBB Cabinet

NOTE: Figure 4.3 is an example of how the wire connections can be routed. However, any other cabinet knock-outs (on either the main control panel or the RBB cabinet), that are not previously being used may be utilized to connect conduit between the two cabinets.

6. Align the cover plate mounting keyhole over the cover mounting screws.

7. Slide the cover into place and tighten the cover mounting screws.

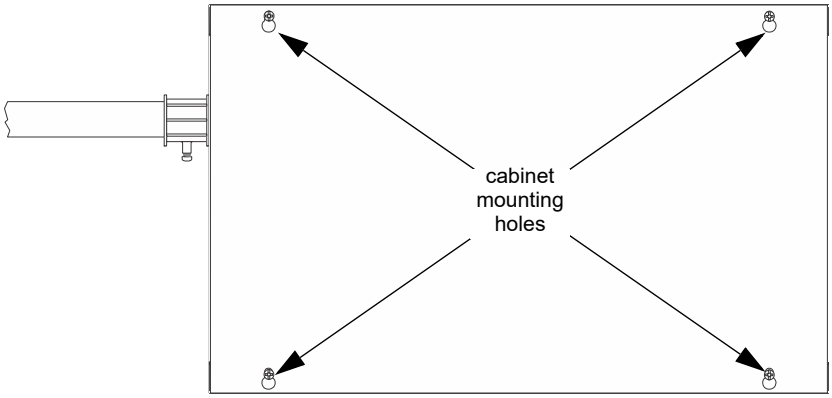

Figure 4.9 Cover Plate Mounting Keyholes and Cover Mounting Screws Alignment

4.6 Wiring Specifications

4.6.1 Length Limitations

This section contains information on calculating SBUS wire distances and the types of wiring configurations (Class A and B).

4.6.2 Calculating Wiring Distance for SBUS Modules

The following instructions will guide you in determining the type of wire and the maximum wiring distance that can be used with SBUS accessory modules.

To calculate the wire gauge that must be used to connect SBUS modules to the panel, it is necessary to calculate the total worst case current draw for all modules on a single 4-conductor bus. The total worst case current draw is calculated by adding the individual worst case currents for each module. The individual worst case values are shown in the table below.

NOTE: Total worst case current draw on a single SBUS cannot exceed 1 amp. If a large number of accessory modules are required and the worst case current draw will exceed the 1 amp limit, then the current draw must be distributed using 5895XL Power Expanders. Each 5895XL Power Expander provides an additional SBUS, with an additional 1 amp of SBUS current. Wiring distance calculations are done separately for each 5895XL, and separately for the panel itself.

Model Number	Worst Case Current Draw
6860, 5860, 6855 Fire Annunciators	0.120 amps
5815XL SLC Loop Expander	0.150 amps
5824 Serial/Parallel Printer Interface Module	0.040 amps
5880 LED I/O Module	0.250 amps
5865 LED Annunciator	0.200 amps
5895XL Intelligent Power Supply	0.010 amps
5496 NAC Expander	0.010 amps
SK-NIC Network Interface Card	0.021 amps
CELL-MOD/CELL-CAB-SK	0.145 amps
SK-F485C Fiber Converter	0.125 amps

Table 4.2 SBUS Device Current Draw

After calculating the total worst case current draw, Table 4.3 specifies the maximum distance the modules can be located from the panel on a single wire run. The table insures 6.0 volts of line drop maximum. In general, the wire length is limited by resistance, but for heavier wire gauges, capacitance is the limiting factor.

These cases are marked in the chart with an asterisk (*). Maximum length can never be more than 6,000 feet, regardless of gauge used. (The formula used to generate this chart is shown in the chart below).

Wiring Distance: SBUS Modules to Panel				
Total Worst Case Current Draw (amps)	**22 Gauge**	**18 Gauge**	**16 Gauge**	**14 Gauge**
0.100	1852 ft.	4688 ft.	* 6000 ft.	* 6000 ft.
0.200	926 ft.	2344 ft.	3731 ft.	5906 ft.
0.300	617 ft.	1563 ft.	2488 ft.	3937 ft.
0.400	463 ft.	1172 ft.	1866 ft.	2953 ft.
0.500	370 ft.	938 ft.	1493 ft.	2362 ft.
0.600	309 ft.	781 ft.	1244 ft.	1969 ft.
0.700	265 ft.	670 ft.	1066 ft.	1687 ft.
0.800	231 ft.	586 ft.	933 ft.	1476 ft.
0.900	206 ft.	521 ft.	829 ft.	1312 ft.
1.000 (Max)	185 ft.	469 ft.	746 ft.	1181 ft.

Table 4.3 Wire Distances Per Wire Gauge

The following formulas were used to generate the wire distance chart

$$\text{Maximum Resistance (Ohms)} = \frac{\text{6.0 Volts}}{\text{Total Worst Case Current Draw (amps)}}$$

$$\text{Maximum Wire Length (Feet)} = \frac{\text{Maximum Resistance (Ohms)}}{\text{Rpu}} * 500$$

(6000 feet maximum)

where: Rpu = Ohms per 1000 feet for various Wire Gauges (see table below)

Table 4.4

Wire Gauge	Ohms per 1000 feet (Rpu)
22	16.2
18	6.4
16	4.02
14	2.54

Table 4.5 Typical Wire Resistance Per 1000 ft.

Wiring Distance Calculation Example:

Suppose a system is configured with the following SBUS modules:

2 - 5860 Fire Annunciators

1 - 5496 Intelligent Power Expander

1 - 5865 LED Fire Annunciator

1 - 5824 Parallel/Serial Interface

The total worst case current is calculated as follows:

5860 Current Draw	= 2 x 0.100 amps	= 0.200 amps
5895XL Current Draw	= 1 x .010 amps	= .010 amps
5865 Current Draw	= 1 x 0.200 amps	= 0.200 amps
5824 Current Draw	= 1 x 0.040 amps	= 0.040 amps
Total Worst Case Current Draw		= 0.450 amps

Table 4.6 Worst Case Current Draw

Using this value, and referring to the Wiring Distance table, it can be found that the available options are:

- 370 feet maximum using 22 Gauge wire
- 938 feet maximum using 18 Gauge wire
- 1493 feet maximum using 16 Gauge wire
- 2,362 feet maximum using 14 Gauge wire

4.6.3 Wiring Configurations

Figure 4.10 illustrates SBUS, Class B configuration.

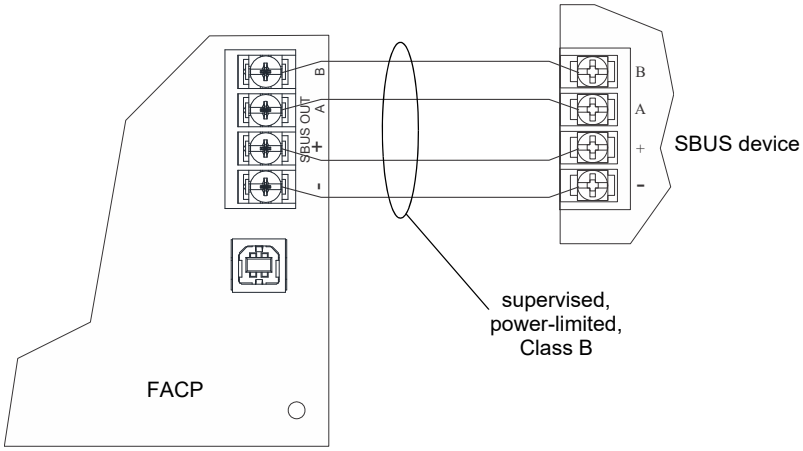

Figure 4.10 SBUS Class B Wiring

4.7 6855 Remote Annunciator Installation

The optional model 6855 Remote Annunciator, is shown in Figure 4.11. The 6855 can be surface or flush mounted. Up to 12 annunciators can be added to the 6808 system in any combination.

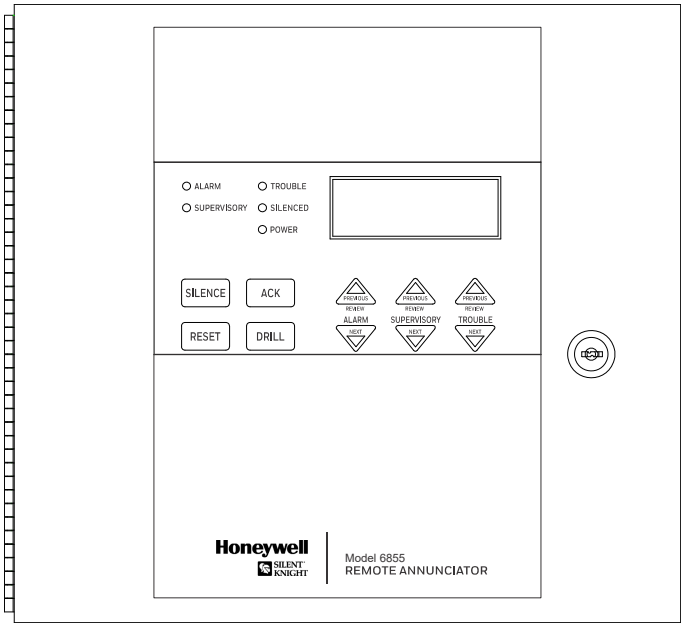

Figure 4.11 6855 Remote Annunciator

6855 installation involves the following steps:

1. Ensure power is off at the panel.
2. Mount the 6855 in the desired location (see Section 4.7.1).
3. Connect the 6855 to the panel (see Section 4.7.2).
4. Use the DIP switches on the back of the 6855 to assign an ID#. (See Section Section 4.13.1.)
5. The new 6855 module must be added to the system through programming. JumpStart Auto-Programming will add the module automatically (see Section 7.1). You can also add it manually (see Section 8.2.2). Select a name, if desired.

4.7.1 Mounting the 6855

This section of the manual describes mounting the remote annunciator. The annunciator can be flush- or surface-mounted.

Flush Mounting

Backbox dimensions are 9-9/32” W x 8-3/8” H. Minimum depth is 2". The backbox can be mounted prior to the complete installation of the 6855 using any of the mounting holes shown below.

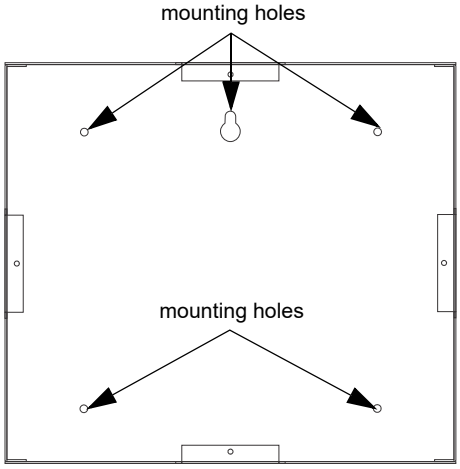

Figure 4.12 6855 Backbox Mounting

6. Remove knockout holes as needed for wires. There are 10 knockouts available, two on each side and two in the back of the cabinet.
7. Wire the annunciator board to the main control panel. Refer to Figure 4.15.
8. Attach the annunciator and door assembly to backbox as shown below using the supplied screws.

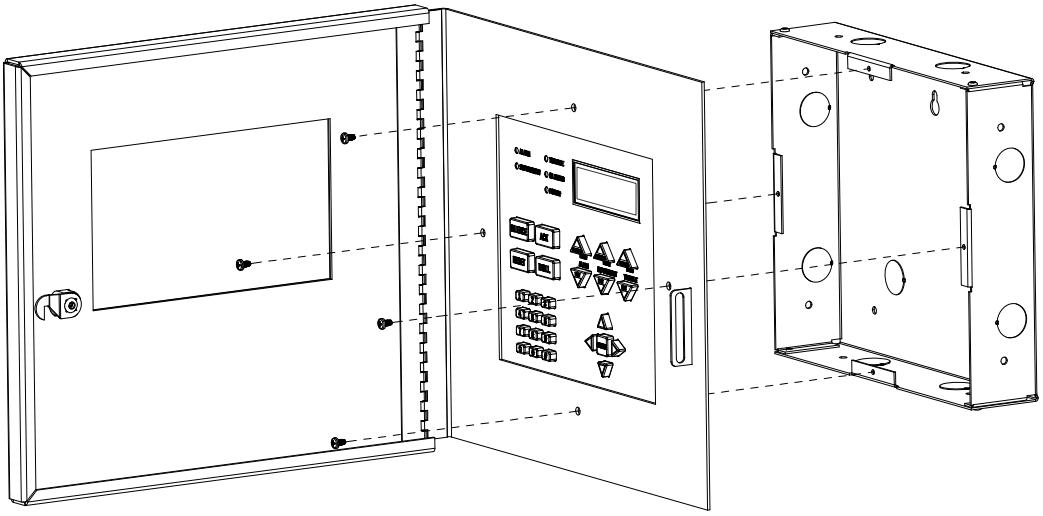

Figure 4.13 Attaching Annunciator/Door Assembly to Backbox

Surface Mounting

The optional Model RA-100TR Trim Ring Kit is available for use when surface mounting.

1. Remove the desired knockout.
2. Mark and pre-drill hole in the wall for the center top keyhole mounting bolt. Refer to Figure 4.12 for mounting hole locations.
3. Install center top fastener in the wall with the screw head protruding.
4. Place backbox over the top screw, level and secure.
5. Mark and drill the left and right upper and lower mounting holes.
6. Install remaining fasteners and tighten.
7. Run wires to the control panel. Refer to Figure 4.15.

8. Place the trim ring over the back box as shown below.

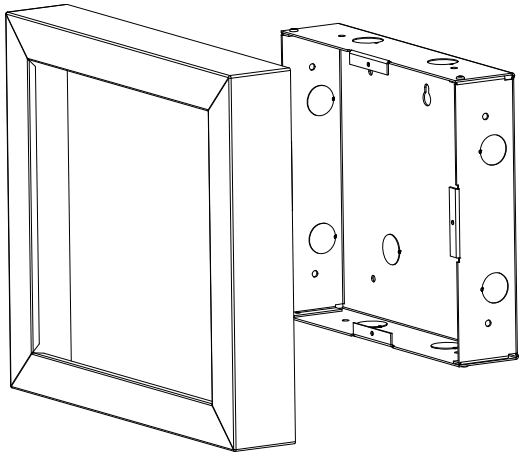

Figure 4.14 Installing Trim Ring

9. Attach the door assembly to the backbox using the screws provided. Refer to Figure 4.13.

4.7.2 6855 Connection to the Panel

Connect the 6855 to the panel as shown below.

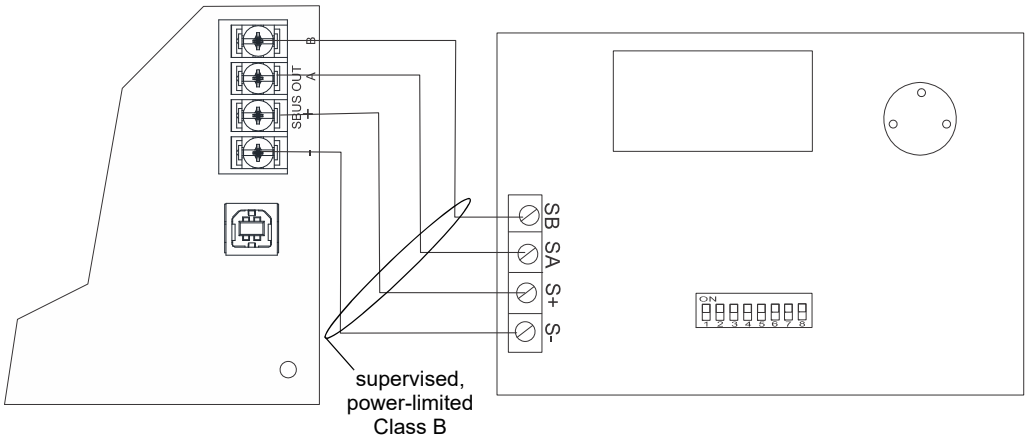

Figure 4.15 6855 Connection to the Panel

4.8 5860 Remote Annunciator Installation

The 5860 is an optional remote annunciator. Up to 12 annunciators can be added to the 6808 system.

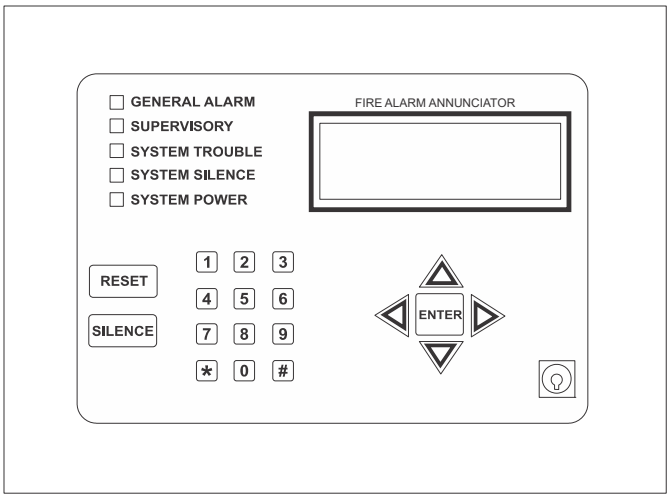

Figure 4.16 5860 Remote Annunciator

5860 installation involves the following steps:

1. Ensure the power is off at the panel.
2. Mount the 5860 in the desired location (see Section 4.8.1).
3. Connect the 5860 to the panel (see Figure 4.10).
4. Use the DIP switches on the back of the 5860to assign an ID# to the annunciator (see Section 4.13.1).
5. The new 5860 module must be added to the system through programming. JumpStart will add the module automatically (see Section 7.1). You can also add it manually (see Section 8.2.2). Select a name, if desired.

4.8.1 Mounting the 5860

This section of the manual describes mounting the remote annunciator. The annunciator can be flush- or surface-mounted. Figure 4.17 shows the parts of the annunciator. Instructions for disassembling and mounting appear on the following pages.

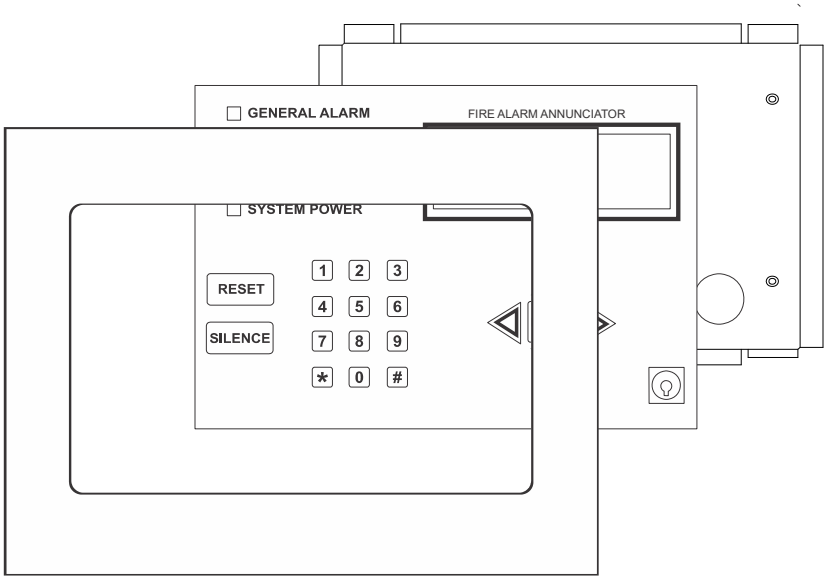

Figure 4.17 Annunciator Parts

The 5860 comes from the factory fully assembled. You must disassemble it for mounting. To disassemble the annunciator, use a 5/64 hex wrench to remove the set screws, located on the bottom of the annunciator bezel. (See Figure 4.18 for location of the set screws.)

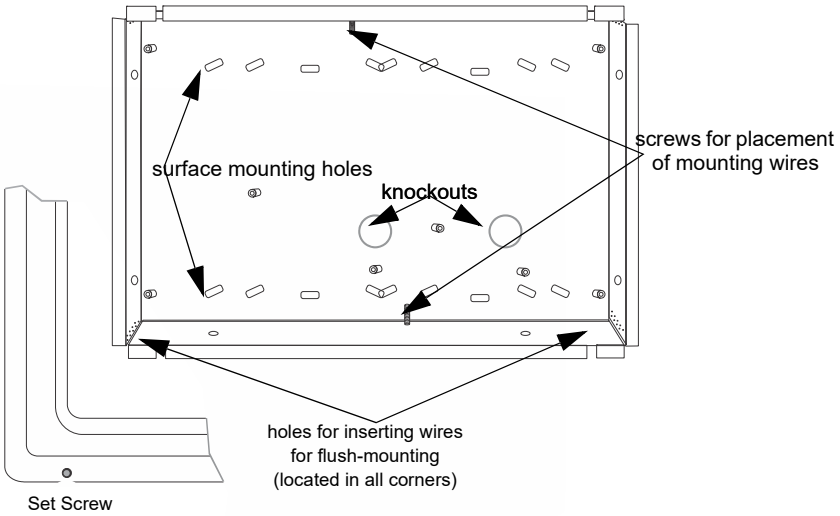

Figure 4.18 Annunciator Backbox and Bezel Details

Flush Mounting

This section of the manual describes flush mounting. You can flush-mount with or without an electrical box.

■ Flush Mounting with an Electrical Box

The 5860 annunciator can be used with the following types of electrical boxes: 4S, single-gang, and double-gang.

If an electrical box is used, the box must be 1-3/8” back from the face of the wall to accommodate the annunciator. Studs used with an electrical box must be 2x4” (or larger).

■ Flush Mounting Steps

1. Cut a hole in the sheet rock to the following dimensions: 8-1/4” W x 6-5/8”H. If an electrical box is used, the box must be 1-3/8” back from face of wall to accommodate the annunciator.
2. Remove knockout holes as needed for wires.
3. Fit the annunciator backbox into the hole and stabilize with mounting wires. Angle the mounting wires into the first hole past the sheet rock. Secure the wires behind the screws as shown in Figure 4.19. When all four wires are in place, the backbox should fit snugly into the hole in the sheetrock.
4. After the annunciator wiring to the panel has been completed (refer to Figure 4.10), replace the electronic assembly in the back box. Place the bezel over the back box and tighten the set screws on the bezel.

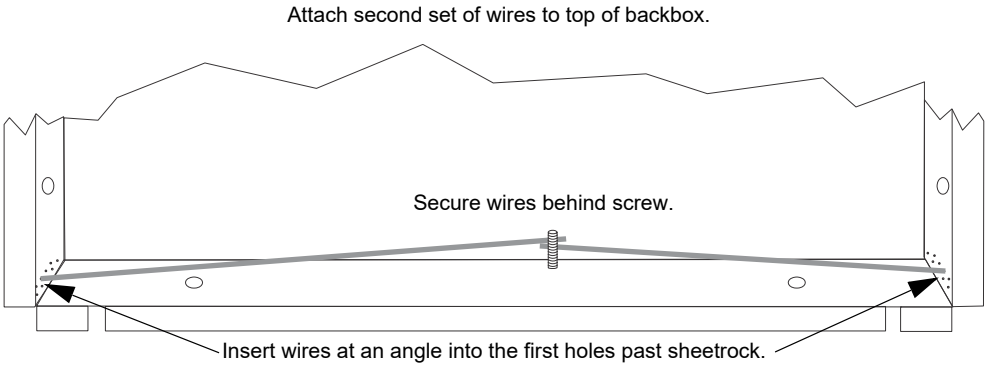

Figure 4.19 Flush Mounting the Backbox

Surface Mounting

The 5860 can be mounted directly to a surface or can be attached to a single, double, or four-square electrical box. Trim Ring Kit 5860TR/G is available for use when surface mounting.

1. Drill holes in the surface to match the screw holes on the backbox. Refer to Figure 4.18 for locations.
2. Fit the trim ring over the backbox.
3. Attach the backbox to the wall using screws provided.
4. Wire the annunciator to the FACP as shown below.

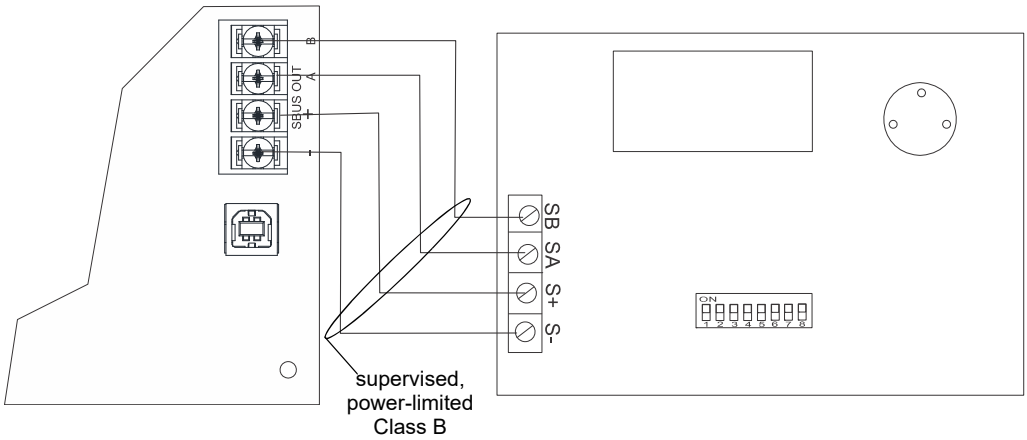

Figure 4.20 5860 Connection to the Panel

5. Replace the electronic assembly in the backbox. Place the bezel over the backbox and tighten the set screws on the bezel. Refer to Figure 4.18 for location of set screws.

4.9 6860 Remote Annunciator Installation

The optional 6860 Remote Annunciator can be surface or flush mounted.

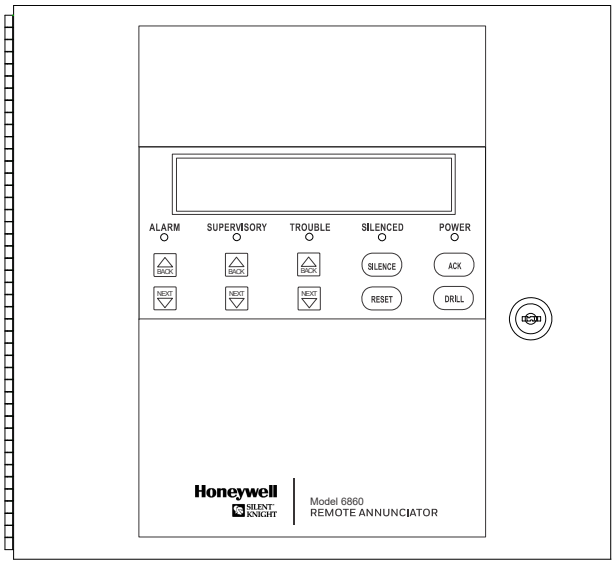

Figure 4.21 6860 Remote Annunciator

6860 installation involves the following steps:

1. Ensure power is off at the panel.
2. Mount the 6860 in the desired location (see Section 4.9.1).
3. Connect the 6860 to the panel (see Section 4.9.2).
4. Use the DIP switches on the back of the 6860 to assign an SBUS ID# (see Section 4.13.1).
5. The 6860 module must be added to the system through programming. JumpStart Auto-Programming will add the module automatically (see Section 7.1).

4.9.1 Mounting the 6860

This section of the manual describes mounting the remote annunciator. The annunciator can be flush or surface mounted.

Flush Mounting

This section of the manual describes flush mounting. Follow these steps to flush mount the 6860.

1. The back box dimensions are 9-1/4” W x 8-3/8” H. The minimum depth required is 2". The backbox can be mounted prior to the complete installation of the 6860 using any of the mounting holes shown below.

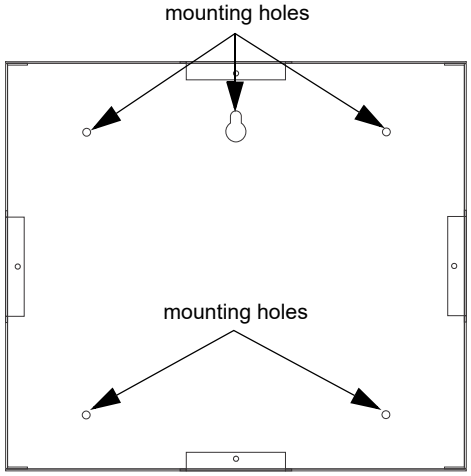

Figure 4.22 6860 Backbox Mounting

2. Remove knockouts as needed for wires. There are 10 knockouts available, two on each side and two in the back of the cabinet.
3. Wire the annunciator board to the main control panel as shown in Figure 4.25.

4. Attach the annunciator and door assembly to back box as shown below using the supplied screws.

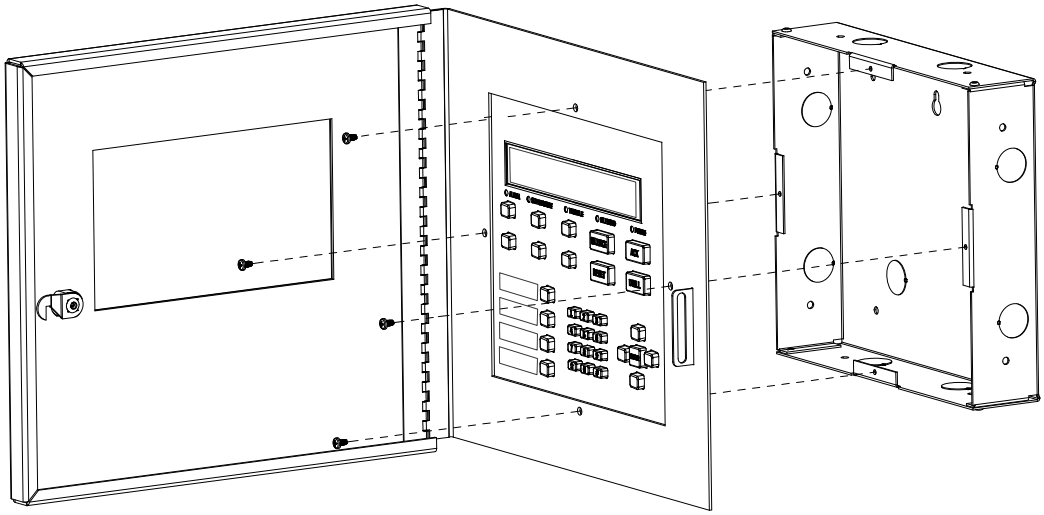

Figure 4.23 Attaching Annunciator / Door Assembly to Backbox

Surface Mounting

The RA-100TR Red Trim Ring kit is available for use when surface mounting the 6860.

1. Remove the desired knockout.
2. Mark and pre-drill hole in the wall for the center top keyhole mounting bolt. Refer to Figure 4.22 for mounting hole locations.
3. Install center top fastener in the wall with the screw head protruding.
4. Place backbox over the top screw, level and secure.
5. Mark and drill the left and right upper and lower mounting holes.
6. Install remaining fasteners and tighten.
7. Run wires to the control panel. Refer to Figure 4.25.
8. Place the trim ring over the back box as shown below.

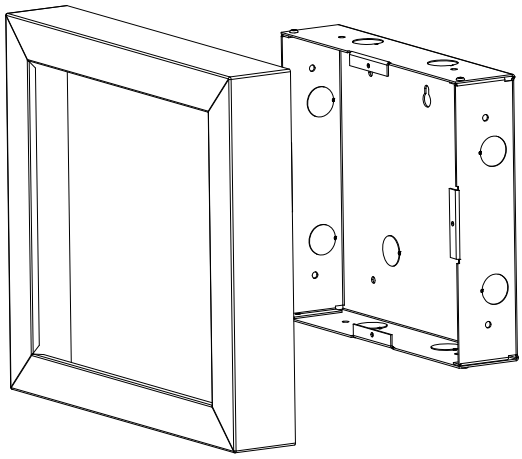

Figure 4.24 Installing Trim Ring

9. Attach the door assembly to the backbox using the screws provided. Refer to Figure 4.23.

4.9.2 6860 Connection to the Panel

Connect the 6860 to the panel as shown below.

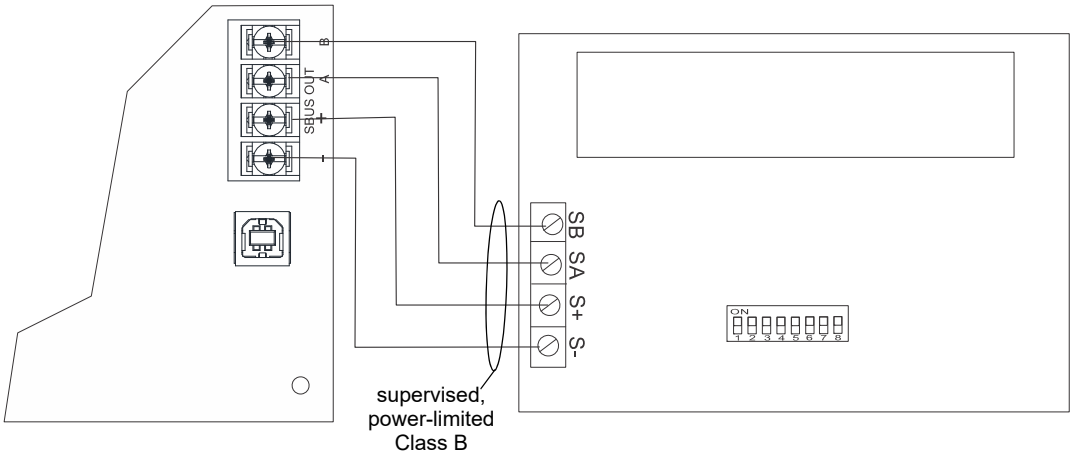

Figure 4.25 6860 Connection to the Panel

4.10 5824 Serial/Parallel Printer Interface Module Installation

The 5824 serial/parallel printer interface module allows you to connect a printer to the panel, so you can print a real-time log of system events. Instructions for installing the 5824 appear below.

The 5824 and the printer connected to the 5824 Parallel port is ancillary, the serial port can be used for primary fire signaling. The printer must be a UL 864 listed printer.

5824 installation involves the following steps.

1. Ensure the power is off at the panel.
2. Connect the 5824 to the panel as shown in Figure 4.26.

NOTE: There is a maximum of four 5824 modules per panel.

3. Use the DIP switches on the back of the board to assign an ID# to the 5824 (see Section 4.13.1).
4. Configure the 5824 device through programming. See Section 4.10.1.
5. Connect a printer to the 5824 as shown below.

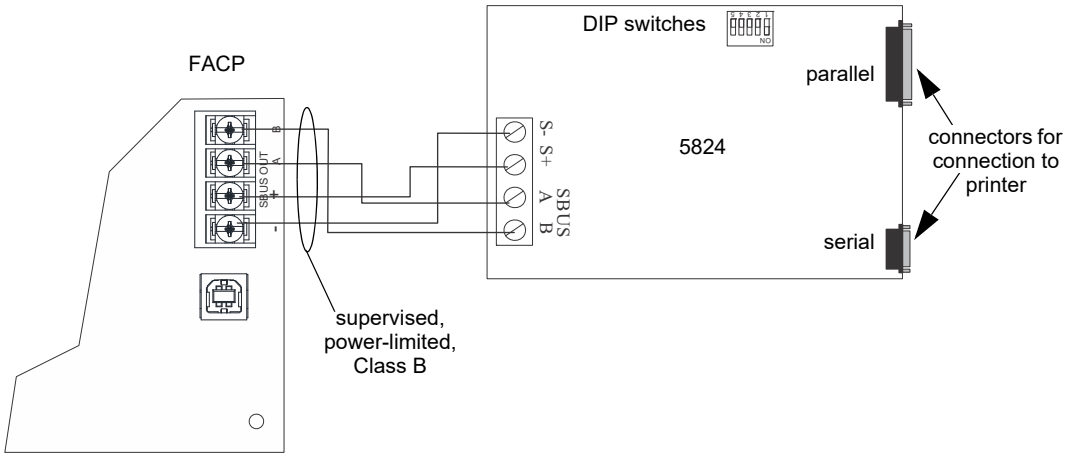

Figure 4.26 5824 Connection to the Panel

4.10.1 Selecting 5824 Options

Configuring the 5824 includes the following steps:

1. Add the module to the system. JumpStart will add the module automatically (see Section 7.1). You can also add it manually (see Section 8.2.2).
2. Select a name, if desired.
3. Select options for the printer and the output port. See below.

Printer and Output Port Options

The printer is for ancillary use only.

1. From the Main Menu, select 7 for Program Menu.
2. Select 1 for Module.
3. Select 1 for Edit Module.
4. From the list that displays, select the desired 5824 module.
5. Press ENTER to bypass the next two screens. A screen similar to the one shown below will display.

Select *Yes* if printer should be supervised for Out-of-Paper and Offline conditions.
Select type of printer, *Parallel* or *Serial*.

Figure 4.27 Selecting Printer and Output Port Options

6. Select options for the printer as needed for your installation. Most printers are parallel.
7. If you are using a serial printer, use the next screen to select serial port options as required for your printer. Refer to your printer manual if you need more information.

Option	Choices
Baud Rate:	75 - 19200
Data Bits:	5 - 8
Stop Bits:	0.5, 1, 2
Parity:	None, Even, Odd

Table 4.7 Serial Printer Options

4.11 5880 LED I/O Module

The 5880 is an LED driver board that can be used in a wide variety of applications, including as an interface with most customized floor plan annunciator boards. The 5880 can drive up to 40 LEDs and has one PZT controller. The 5880 also has eight inputs for dry contact monitoring. The following sub-sections describe hardware installation. Refer to Section 8 for programming information.

4.11.1 5880 Board Layout

Figure 4.28 is a picture of the 5880 board showing locations of screw terminals for connection to the panel and contact monitor wiring, pin connectors for connecting LEDs, and a DIP switch for selecting an SBUS ID number.

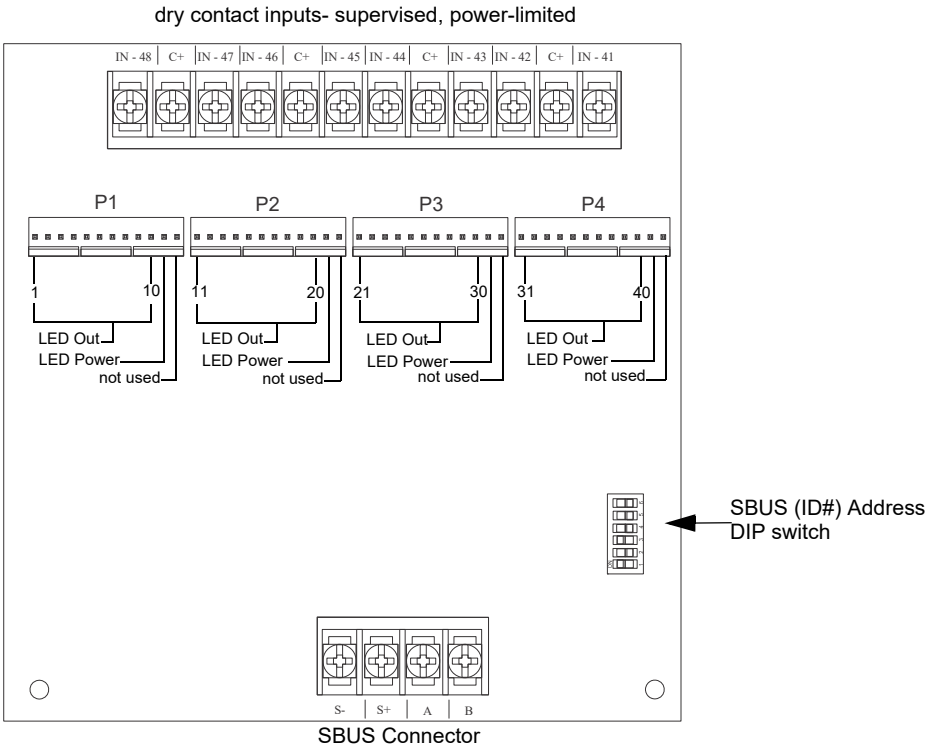

Figure 4.28 5880 Board Layout

4.11.2 5880 Connection to Panel

The 5880 connects to the panel via the SBUS. Make connections as shown below. After the 5880 is connected to the panel, it must be added to the system. This programming step is described in Section 8.

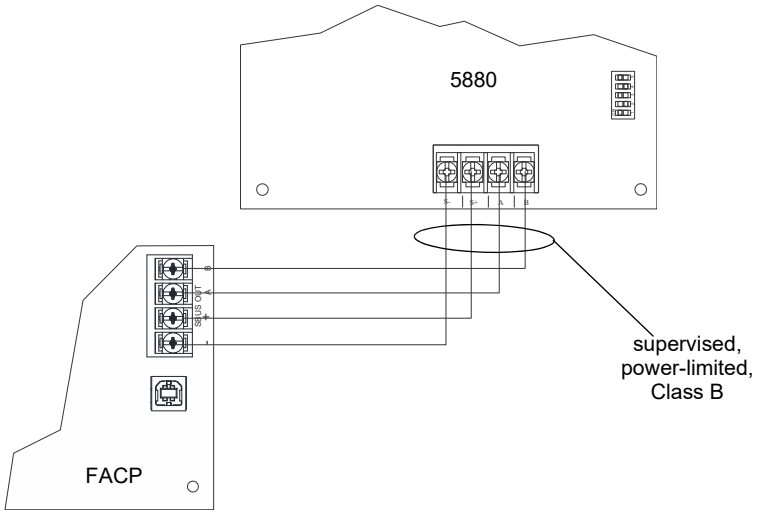

Figure 4.29 5880 Connection to 6808

4.11.3 LED Wiring

There are four 12-pin connectors on the 5880 board for connecting LEDs. Each LED gets its power from Pin 11. Internal resistors are sized so that there is approximately 10 mA of current for each LED, no series resistors are required. LED outputs can be mapped to output circuits. See Section 8 for programming details.

Wire the LEDs as shown below.

On connector P1, Pin 12 is a common open collector output for controlling a PZT. If used, the 5880 PZT will match the PZT pattern of the on-board or remote annunciator.

NOTE: The circuit connected to common “Open Collector Output” (last pin on P1) must be current limited so that no more than 100 mA of current is allowed to flow into the open collector transistor.

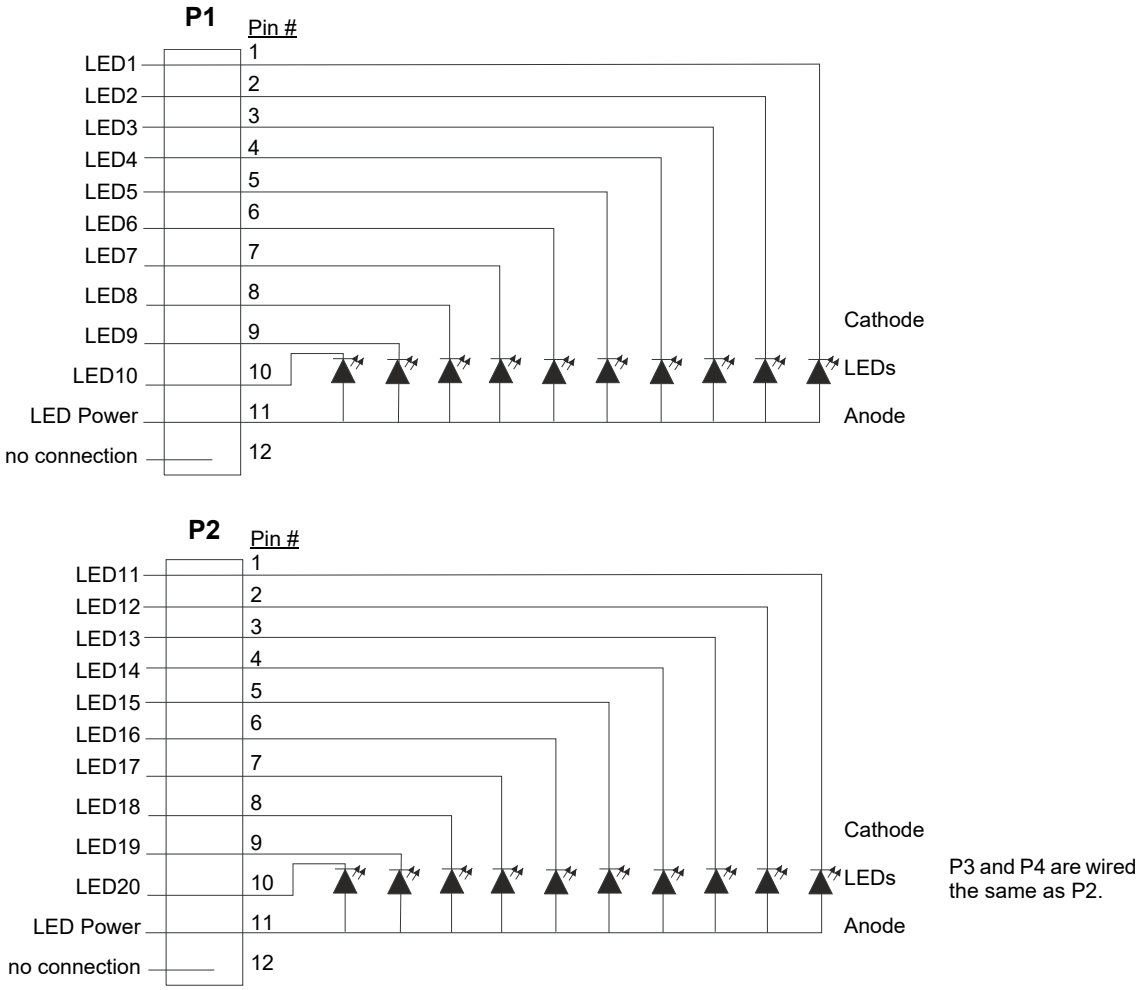

Figure 4.30 5880 Board Layout

4.11.4 Dry Contact Wiring

The 8 input circuits on the 5880 board are for monitoring switch inputs. Any type of switch supported by the control panel can be used with the 5880. For example, you can use a 5880 to monitor pull stations, water flow, tamper, reset, or silence switches.

Wire dry contacts as shown in Figure 4.31. Notice grouping of terminals; power terminals are shared by two inputs.

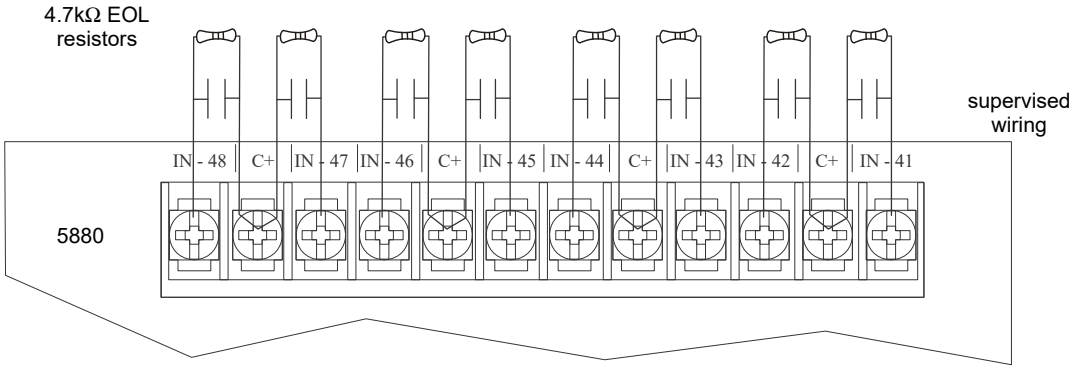

Figure 4.31 Dry Contact Wiring

4.12 5865-3 / 5865-4 LED Annunciator Installation

The 5865-3 and 5865-4 are LED annunciators. The 5865-4 has 30 mappable LEDs, remote silence and reset key switches, and a general system trouble LED. The 5865-3 has 30 mappable LEDs only. These are arranged as 15 pairs of red (typically used for alarm) and yellow (typically used for trouble) LEDs.

Installation of the 5865-3 and 5865-4 is identical. The key switches and the trouble LED follow the behavior of other system annunciators and do not require any programming. The following subsections describe how to install the 5865-3 and 5865-4 hardware. Refer to Section 8 for programming information.

NOTE: The term “5865” refers to both the 5865-3 and 5865-4 unless otherwise specified.

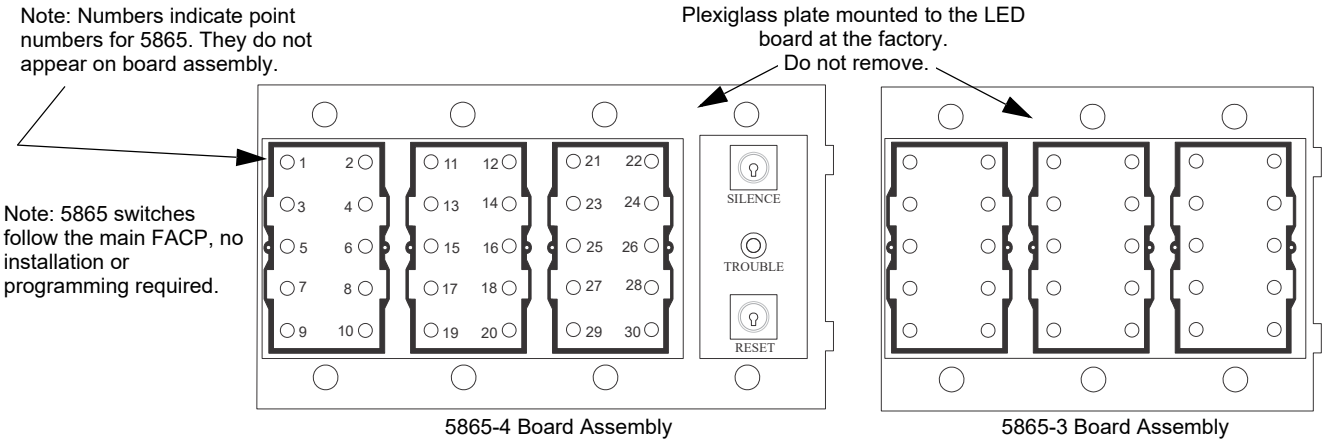

Figure 4.32 5865-3 and 5865-4 Assembly (Front View)

4.12.1 5865 Connection to Panel

The 5865 connects to the panel via the SBUS. Make connections as shown below. After the 5865 is connected to the panel, it must be added to the system. This programming step is described in Section 4.13.

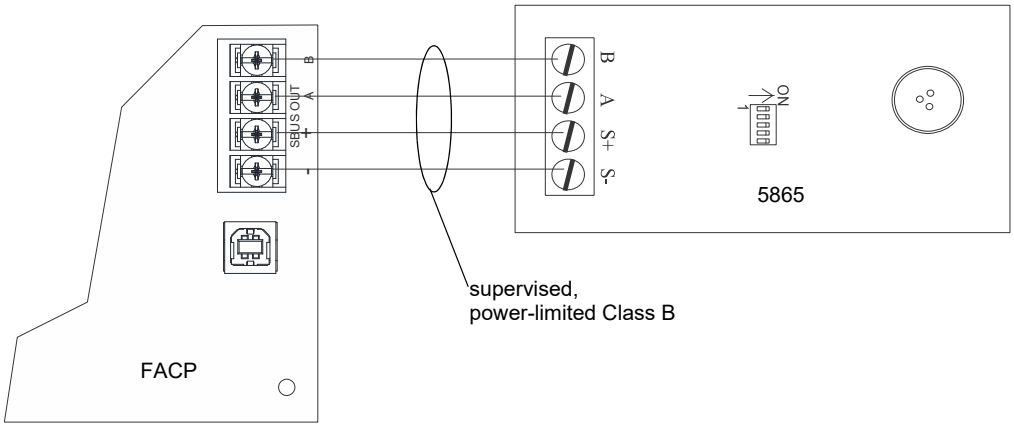

Figure 4.33 5865 Connection to the FACP

4.12.2 5865 Mounting

Mount the 5865-4 to a standard 4-gang electrical box. Mount the 5865-3 to a standard 3-gang electrical box. In Figure 4.34, the 5865-4 attached to a 4-gang box is used as an example.

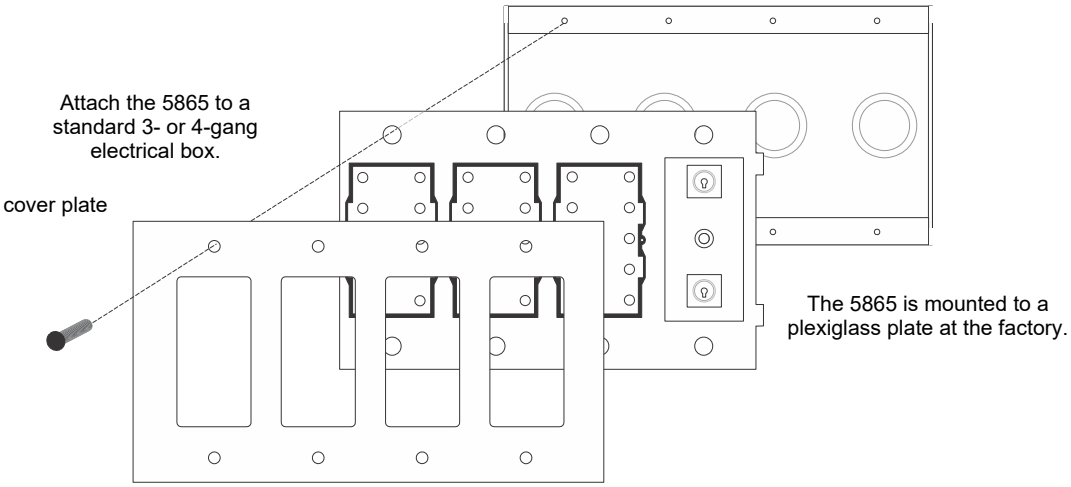

Figure 4.34 5865 Mounting Example

The 5865 ships with a set of zone description labels that can be inserted into the 5865 board assembly. These labels can be used in a typewriter or can be written on by hand. Slide the labels under the plexiglass as shown in Figure 4.35. The LEDs will show through the label when illuminated.

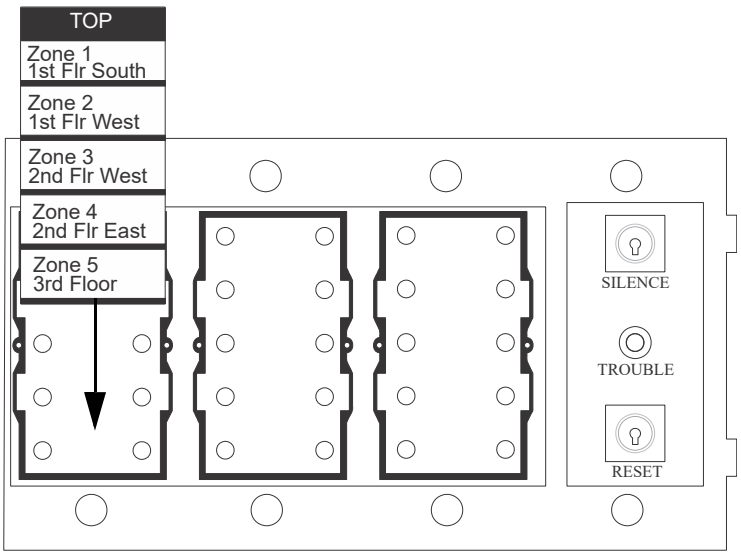

Figure 4.35 Inserting Zone Description Labels

4.13 Configuring SBUS Modules

This section describes how to configure any system hardware modules that have been added to the system.

4.13.1 Assigning SBUS Module IDs

When installing a hardware module (see Table 4.2 for list of compatible SBUS devices), you must use the DIP switches on the module to assign an ID# to the module. Figure 4.36 shows all possible DIP switch positions and their correlation to a numerical ID. Address 0 is an invalid address and cannot be used. For example, to select ID 2, place DIP switch 2 in the up position.

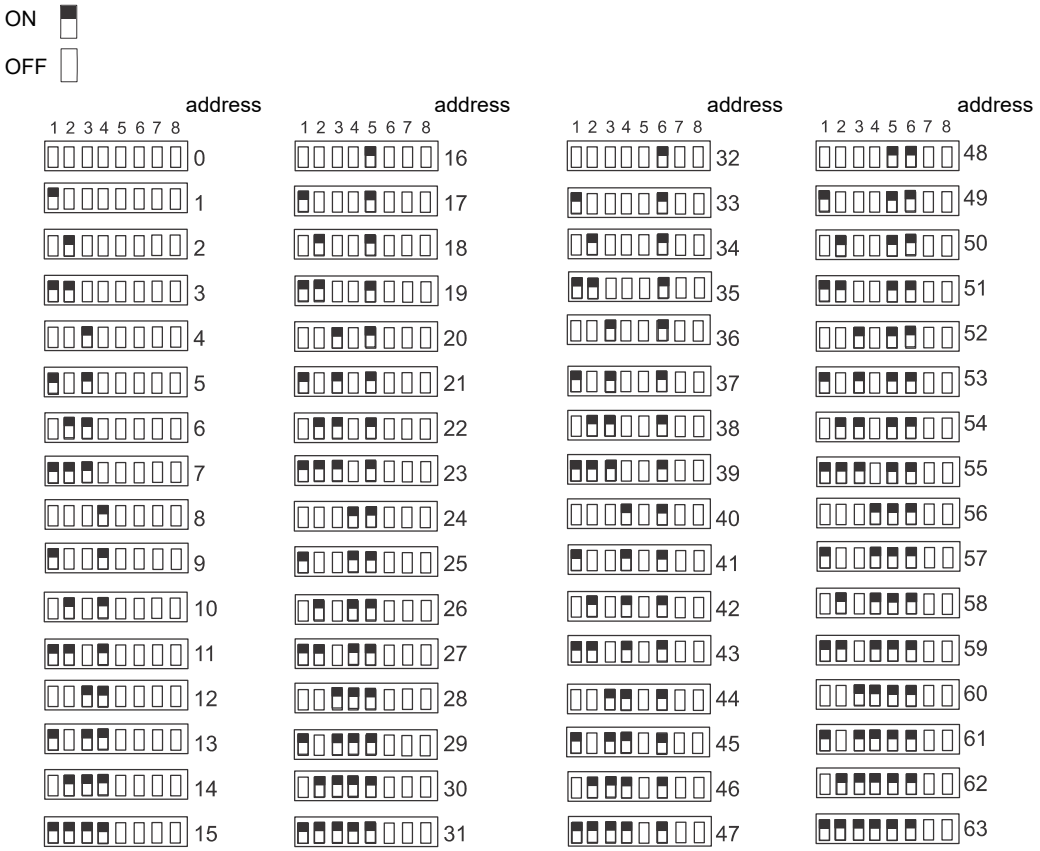

Figure 4.36 Possible SBUS Module Addresses

Refer to Section 8.2 to edit, add, delete, and view the module list.

4.13.2 SBUS Bandwidth Considerations

Each SBUS device generates a certain amount of traffic on the SBUS. Generally, the amount of traffic generated depends on the type of SBUS device. To help you figure out the SBUS bandwidth usage of a given collection of devices, a tool is available on the Silent Knight website (www.silentknight.com). The tool will serve as a guide to help determine how heavily loaded an SBUS is with respect to bandwidth. We recommend you use this tool if you plan to have more than eight SBUS devices per SBUS. Remember to include devices that are on 5895XL SBUS repeaters in your list of devices for SBUS bandwidth calculations. See Section Section 4.6.2.

4.13.3 Communication Protocol

DIP switch 7 on the 6860, 6855, and 5860 is used to determine the communication protocol of the device. Set DIP switch 7 to ON for SBUS protocol. This switch must stay in the ON position for proper functionality.

Ensure switch 7 is ON

Incorrect setting

4.13.4 End-of-Line Resistor

The end-of-line termination resistor must be enabled at S1 DIP switch 8 on the last 6860, 6855, and 5860 device on the communication circuit. All other annunciators should have these switches set to disable.

termination enabled

termination disabled

4.14 Telephone Connection

Connect the telephone lines as shown in Figure 4.37. The 7860 phone cord is available from Honeywell for this purpose. A number of programmable options are available for customizing telephone lines. These options are described in Section 8.6.

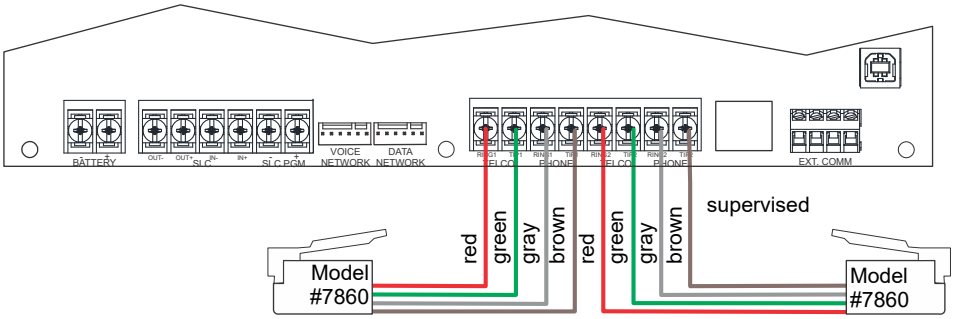

Figure 4.37 Connection of Telephone Lines

4.15 Notification Appliance/Auxiliary Power Circuits

NOTE: These circuits are considered regulated unless used for releasing type service, in which case they are considered special applications.

Four outputs are built-in to the 6808 FACP which can be programmed to be used as NACs (Class A or Class B) or as aux power. This section of the manual explains how to install conventional notification appliances and how these terminals can be used for auxiliary power.

4.15.1 Conventional Notification Appliance

This sub-section of the manual explains how to install conventional notification appliances for Class A and Class B configurations.

Class B Notification Wiring

You must use compatible appliances. For a list of compatible appliances, refer to the *Device Compatibility Document*.

To install a Class B notification appliance circuit:

1. Wire Class B Notification appliances as shown below.
2. Configure the circuit through programming (see Section 8.6).

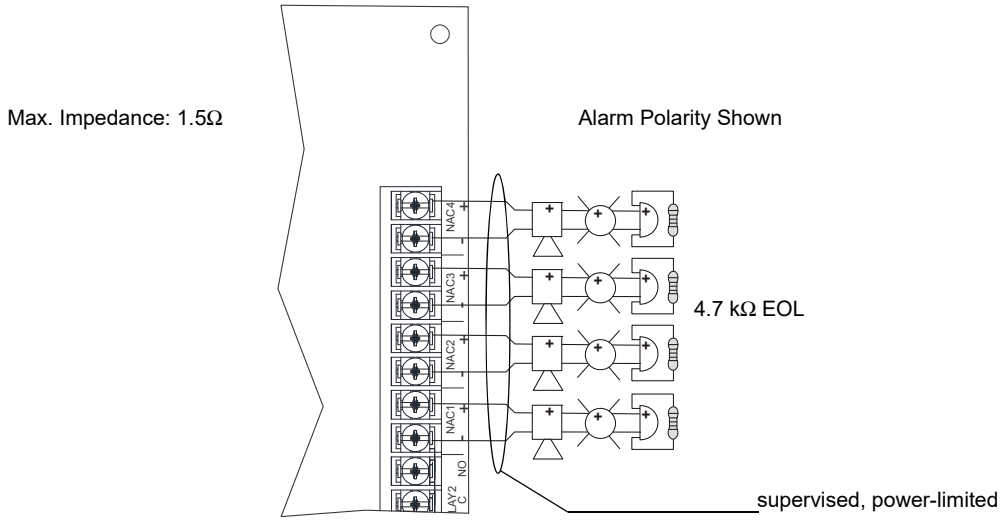

Figure 4.38 Class B Notification Appliance Circuit Wiring

Class A Notification Wiring

You must use compatible appliances. For a list of compatible appliances, refer to the *Device Compatibility Document*.

To install a Class A notification appliance circuit:

1. Wire the Class A notification appliances as shown below.

CAUTION: SYSTEM SUPERVISION

FOR PROPER SYSTEM SUPERVISION DO NOT USE LOOPED WIRE UNDER TERMINALS MARKED – AND + OF THE NAC CIRCUIT. BREAK WIRE RUNS TO PROVIDE SUPERVISION OF CONNECTIONS.

2. Configure the circuit for Class A in programming (see Section 8.5).

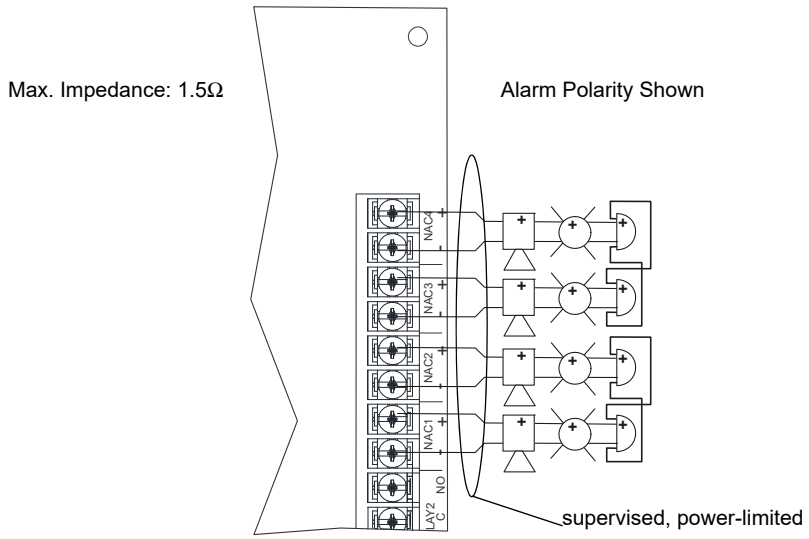

Figure 4.39 Class A Notification Appliance Circuit Configuration

Maximum voltage drop is 3V per Class A circuit.

Current	Maximum Impedance
1.0A	3Ω
1.5A	2Ω
2.0A	1.5Ω
2.5A	1.2Ω
3.0A	1.0Ω

Table 4.8 Maximum Impedance Class A

4.15.2 Auxiliary Power Installation

NAC Circuits 1-4 on the control panel can be used as auxiliary power circuits. The wiring class of the external power source must match the wiring class of the device being powered. The four types of auxiliary power available are:

- Door Holder
- Constant
- Resettable Power
- Sounder Sync Power

Auxiliary power circuits are power-limited. Each circuit can source up to 3A (total current for all NAC circuits must not exceed 6A).

To install an auxiliary power circuit:

1. Wire the NAC circuit(s) that will be used for auxiliary power.
2. Configure the auxiliary power output through programming (see section Section 8.5).

Door Holder Power

Door holder power is intended for fire door applications. When there are no alarms in the system and the panel has AC power, door holder circuits have 24-volt power present at their terminals. Any alarm will cause power to disconnect. Power will be re-applied when the system is reset. If AC power is off for more than 15 seconds, the auxiliary door holder power will be disconnected to conserve the battery backup. When AC power is restored, power is immediately restored to the door holder circuits.

Constant Power

Use constant power for applications that require a constant auxiliary power source. Power is always present at constant circuits.

Resettable Power

Resettable power is typically used to power beam detectors, flame detectors and conventional 4-wire smoke detectors. For circuits selected as Resettable, 24-volt power is always present at the terminals unless a system reset occurs. If a system reset occurs, power is disconnected from the terminals for 30 seconds, then re-applied.

Sounder Sync Power

Sounder Sync Power continuously outputs the System Sensor synchronization pattern and is intended for use with B200S Intelligent sounder bases.

4.16 Onboard Relays (Conventional)

The control panel has two built-in programmable relays and a built-in trouble relay. All relays are Form C rated at 2.5 A @ 24 VDC (resistive).

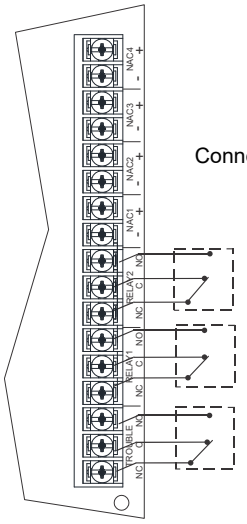

Figure 4.40 Conventional Relay Circuits

NOTE: The N.C. contact is the relay contact that is closed when the panel has power and there are no alarm or trouble conditions.

4.16.1 Trouble Relay

The control panel has a dedicated common Form C trouble relay labeled TROUBLE. The relay provides a normally open and a normally closed contact. The trouble relay will deactivate under any trouble condition.

4.16.2 Programmable Relays

The control panel has two Form C programmable relays labeled RELAY 1 and RELAY 2. Each relay provides a normally open and a normally closed contact.

To install one or two programmable relays:

1. Wire Relay 1 and/or Relay 2 as needed for your application. See Figure 4.2 for the location of the relay terminals.
2. Configure the relay through programming (see Section 8.5).

4.17 Remote Station Applications

4.17.1 Keltron Model 3158 Installation

The control panel is compatible with Keltron model 3158, used for direct connection to a Keltron receiver. The 3158 reports alarms, supervisories, and troubles.

The steps for connecting the 3158 to the control panel. Refer to the 3158 installation instructions for complete information.

1. Wire the 3158 to the control panel as shown in the connection list and Figure 4.41.
2. Wire the 3158 within 20 feet (6.1m) of the control panel. Wiring must be enclosed in conduit.
3. Program control panel Relay 2 for alarm.
4. Program NAC circuit 2 for alarm.
5. Program NAC circuit 1 for supervisory non-latching.

NOTE: NACs must be programmed for continuous and non-silencing.

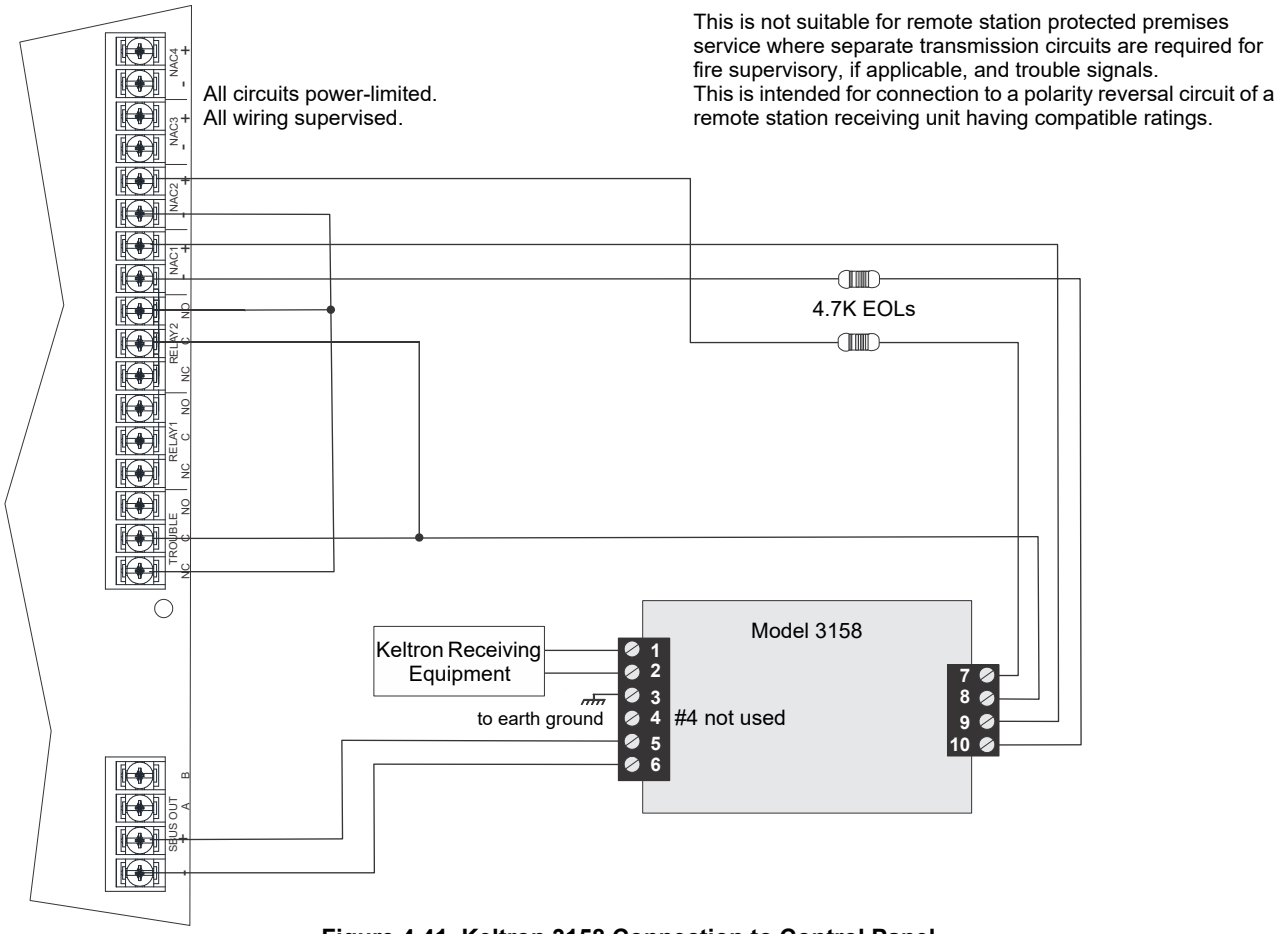

Figure 4.41 Keltron 3158 Connection to Control Panel

4.17.2 City Box Connection Using the 5220 Module

This section describes how to connect the control panel to a municipal fire alarm box or "city box" as required by NFPA 72 Auxiliary Protected Fire Alarm systems for fire alarm service. The city (master) box is an enclosure that contains a manually operated transmitter used to send an alarm to the municipal communication center which houses the central operating part of the fire alarm system.

City Box Standby Current: 0 (Notification supervision current accounted for in control panel draw.)

Alarm Current: 1 Amp for 1 second 27.2 VDC max.

The maximum coil and wire resistance (combined) must not exceed 30 ohms.

To install the 5220 for city box connection:

1. Use one of the knockouts on the right side of the control panel to connect the 5220 using a short piece of conduit. Conduit must not exceed 20 feet (6.1m) in length.
2. Wire the 5220 to the control panel as shown in Figure 4.42. This drawing also shows how to connect the city box coil to terminals 3 and 4 on the 5220. Do not install an EOL resistor in the terminals of the NAC circuit used for this application.
3. Connect earth ground wire to the 5220 chassis with mounting screw.
4. Program the NAC circuit used as a continuous and non-silencing. Refer to Section 8.5 for Point Programming, Section 8.4 for group settings, and Section 8.3 for zone settings and mapping. It is not possible to reset the remote indication until you clear the condition and reset the control panel.

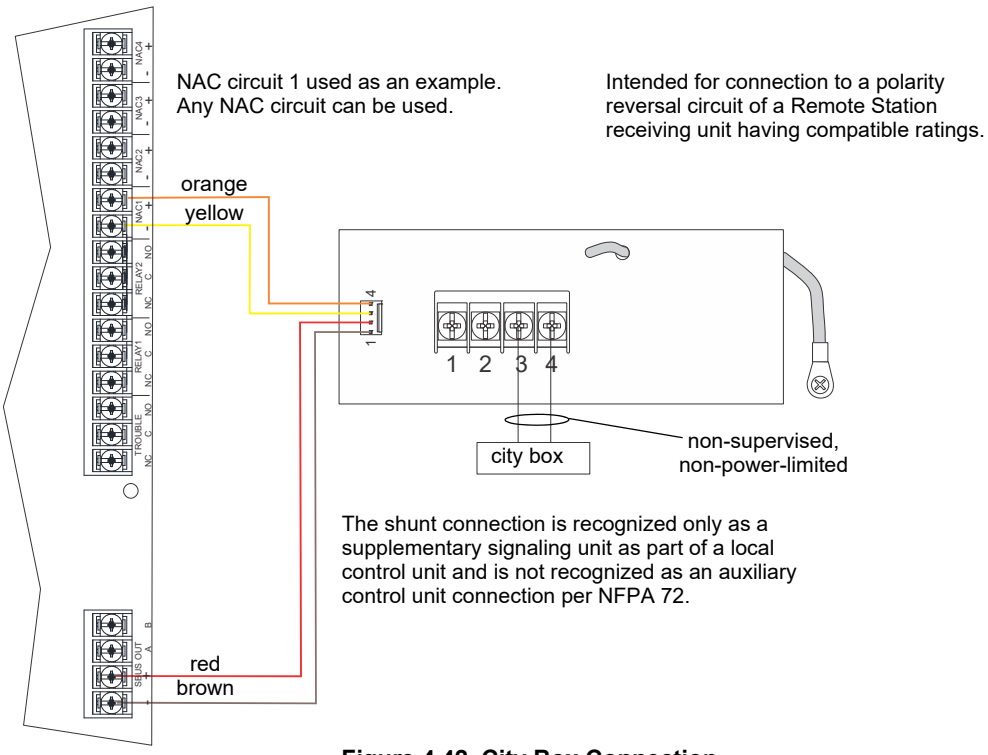

Figure 4.42 City Box Connection

4.17.3 NFPA 72 Polarity Reversal

NOTE: Intended for connection to a polarity reversal circuit of a control unit at the protected premises having compatible rating.

Using the 5220 Module

When the 5220 is wired and programmed for polarity reversal, it reports alarm and trouble events to a remote site. Alarms will override trouble conditions and it will not be possible to reset the remote indicator until the condition is cleared and the control panel is reset.

If an alarm condition occurs, the alarm relay will close, overriding the trouble condition.

Standby Current: 100 mA, 24 VDC

Alarm: 100 mA, 24 VDC

To install the 5220 for polarity reversal, follow the steps below:

1. Locate the knockout on the right side of the control panel cabinet to connect the 5220 using a short piece of conduit (must not exceed 20 feet in length).
2. Wire the 5220 to the control panel using the four-wire pigtail provided as shown in Figure 4.43. This diagram also shows how to connect the 5220 to the remote indicator. Do not install an EOL resistor in the terminals of the NAC circuit used for this application.
3. Connect earth ground wire to the 5220 chassis with mounting screw.
4. Program the NAC circuit used as continuous and non-silencing. Refer to Section 8.5 for point programming, Section 8.4 for group settings, and Section 8.3 for zone settings and mapping. It is not possible to reset the remote indication until you clear the condition and reset the control panel.

5. If necessary, adjust loop current using the potentiometer (R10) on the 5220 board. Normal loop current is 2-to-8 mA with a 1k ohm remote station protected premise unit. Maximum loop resistance is 3k ohm.

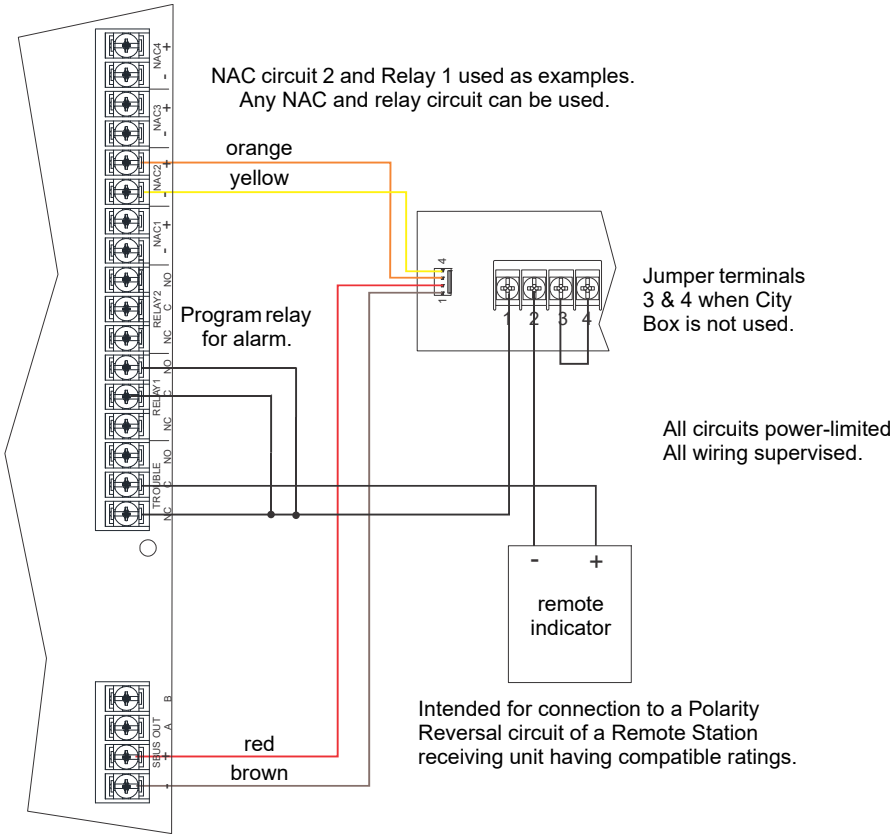

Figure 4.43 Polarity Reversal Connection Using the 5220 Module

Using the 7644-L8 Module

When the 7644-L8 is used for polarity reversal, it allows alarm and trouble events to be reported to a remote site. Alarms will override trouble conditions and it will not be possible to reset the remote indicator until the condition is cleared and the control panel is reset.

To install the 7644-L8 for Polarity Reversal:

1. Wire the 7644-L8 to the control panel as shown in Figure 4.44. Do not install an EOL resistor on the terminals of the NAC circuit used.

NOTE: Use only NAC circuits on the control panel for reverse polarity.

2. Program the NAC circuit as a notification circuit. See Section 8.5.
3. Map the group to activate constant on from the zone event.

4. Program the output group characteristics as non-silenceable and reverse polarity.

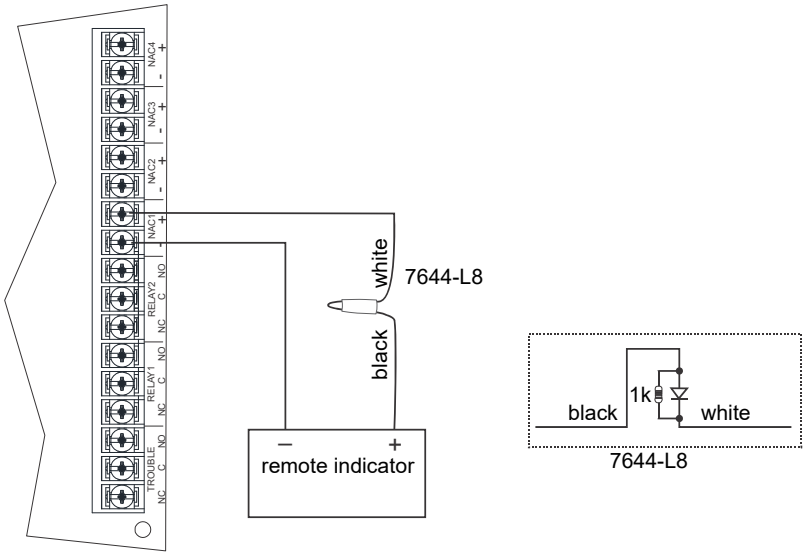

Figure 4.44 Polarity Reversal Connection Using the 7644-L8

Using the SD500-ARM Addressable Relay Module

When the SD500-ARM is wired for polarity reversal, it reports alarm and trouble events to a remote site. Alarms will override trouble conditions and it will not be possible to reset the remote indicator until the condition is cleared and the control panel is reset. Relay 2 must be programmed for Alarm (default).

NOTE: additional SD500-ARM modules must be added, if you need to transmit supervisories or trouble conditions. Use Relay 1 to transmit supervisory conditions. Use the trouble relay to transmit trouble conditions.

Wire the SD500-ARM as shown below.

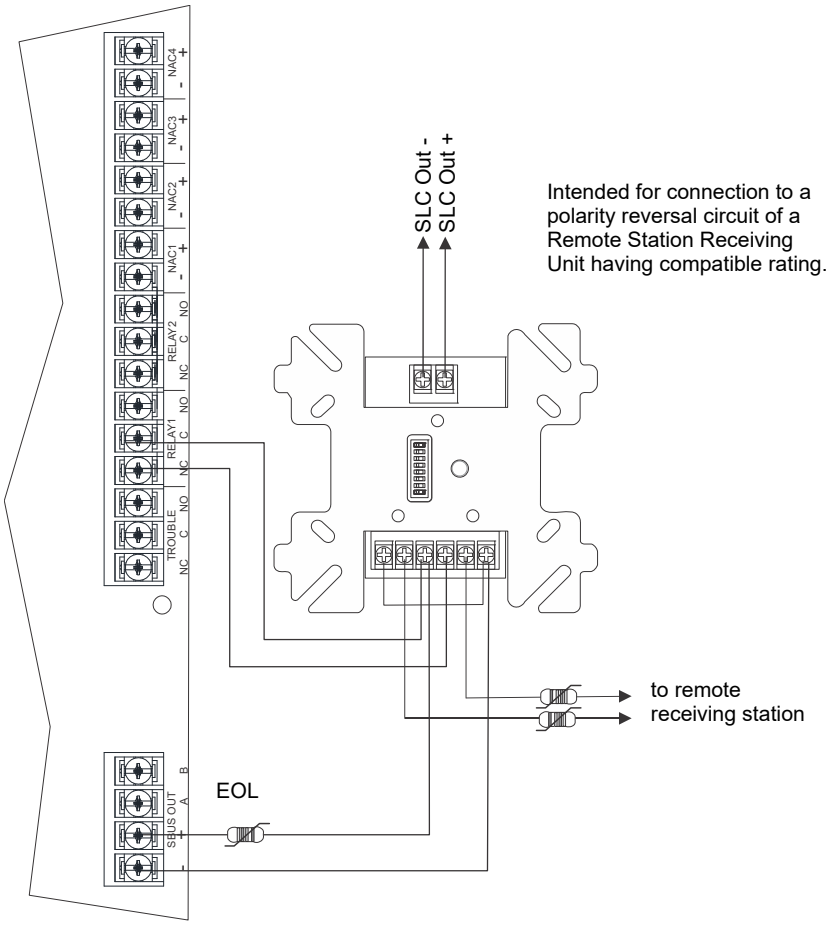

Figure 4.45 Polarity Reversal Connection Using the SD500-ARM Module

Using a MR-201/T Control Relay From Air Products

When the MR-201/T control relay is wired for polarity reversal, it reports alarm and trouble events to a remote site. Alarms will override trouble conditions and it will not be possible to reset the remote indicator until the condition is cleared and the control panel is reset. If an alarm condition occurs, the alarm relay will close, overriding the trouble condition.

- Current: 15 mA max.
- Operating Voltage: 24 VDC nominal
- Resistance: 4 KΩ

To install the MR-201/T for polarity reversal:

1. Wire the MR-201/T as shown below.

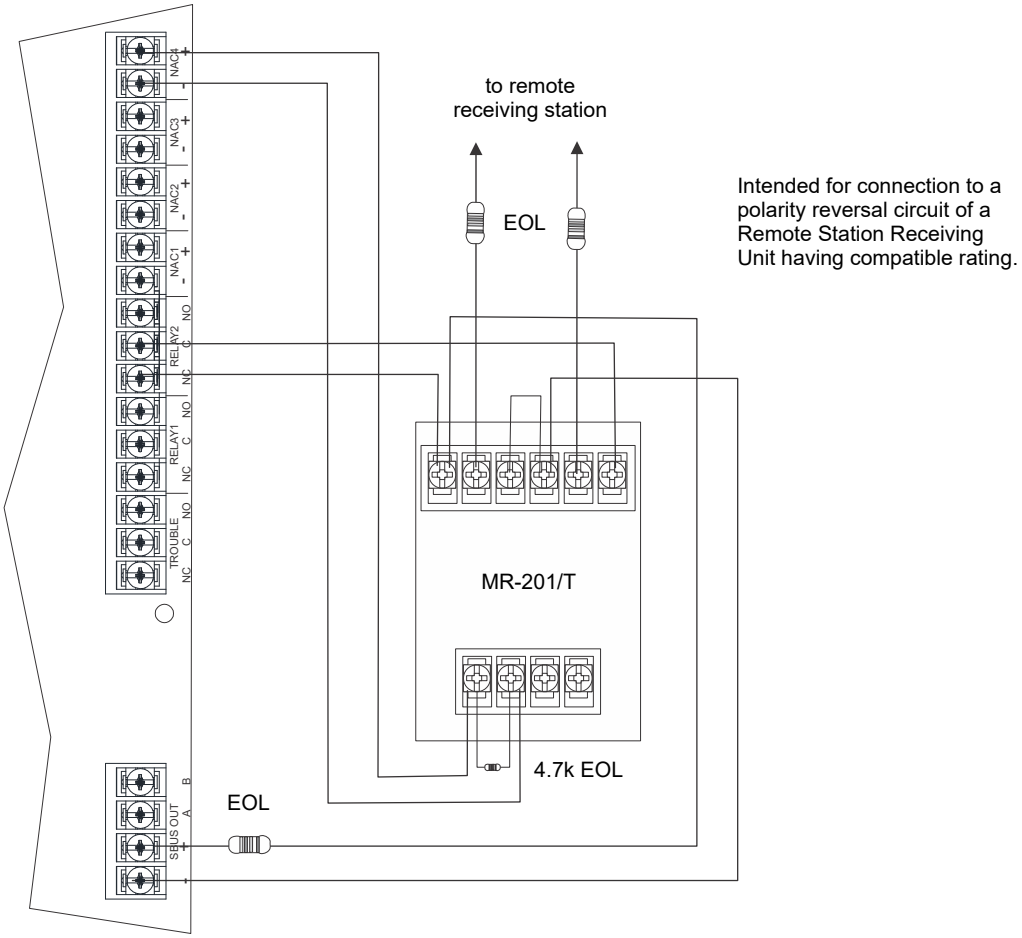

Figure 4.46 Polarity Reversal Connection Using the MR-201/T Relay

2. Program the NAC circuit for non silence NAC circuit.

NOTE: If you need to transmit supervisories or trouble conditions, additional relay modules must be added. Use relay 1 to transmit supervisory conditions. Use the trouble relay to transmit trouble conditions.

4.17.4 Transmitter Activated by Dry Contacts

This section describes the connection of a UL 864 listed remote station transmitter to the 6808 FACP dry contacts. The FACP contacts must be supervised by the remote station transmitter module using end-of-line resistors (ELRs) with a value determined by the transmitter manufacturer. Power is also provided by the remote station transmitter manufacturer. Refer to the remote station transmitter manufacturer's manual for details.

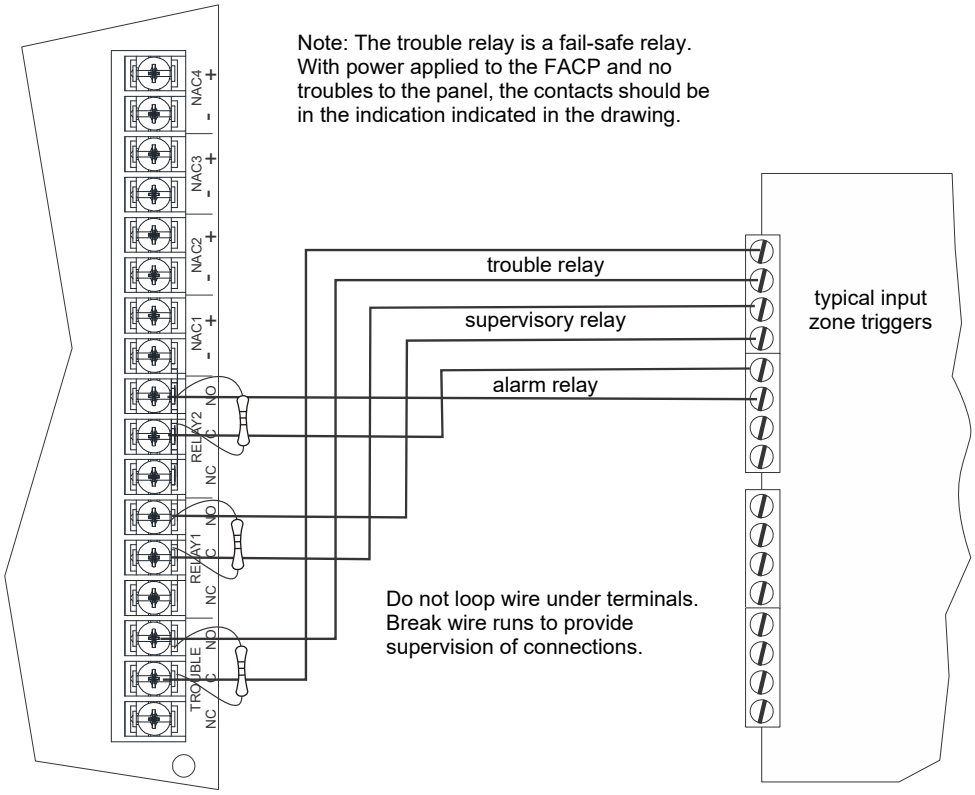

Figure 4.47 Remote Station Transmitter

Section 5: Common Communication Link

5.1 Hardware Features

The 6808 panel can be connected to other 6808 and addressable panels to create a link where one panel is designated as the communicator for all the panels in the link. Up to 17 panels can be connected in the Common Communications Link. This does not create a peer-to-peer network and will not operate as one.

5.1.1 Panels

The 6808 and other applicable addressable panels can be linked together for common communications to the central station. “Sites” are used to allow for individual or common annunciation across the link. Up to 17 sites can be activated and programmed for the link.

5.2 Common Communication Link Wiring

When networking a group of 6808 you must use the SK-NIC to link the panels together. See Figure 5.1 and Figure 5.2, for Internal mounting or external mounting of SK-NIC options

5.2.1 Wiring Options

1. Fiber-Optic Single Mode - Use the SK-NIC and SK-FSL for up to 30dB loss of signal separation. SK-FSL connects to the network using 9/125 micron single-mode fiber.
2. Fiber-Optic Multi-Mode - Use the SK-NIC and SK-FML for up to 8dB loss of signal separation. SK-FML connects to the network using 62.5/125 micron multi-mode fiber.
3. Twisted-Pair Copper Wire - must use the SK-NIC to provide up to 3,000 feet of separation.

All methods of panel connectivity can be used within the same networked system.

.

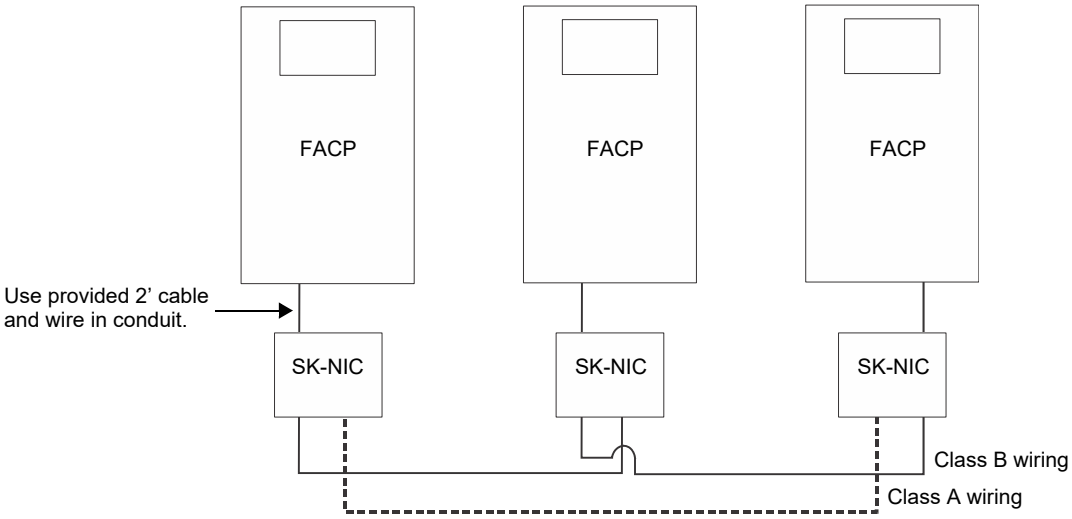

Figure 5.1 External SK-NIC Wiring Option

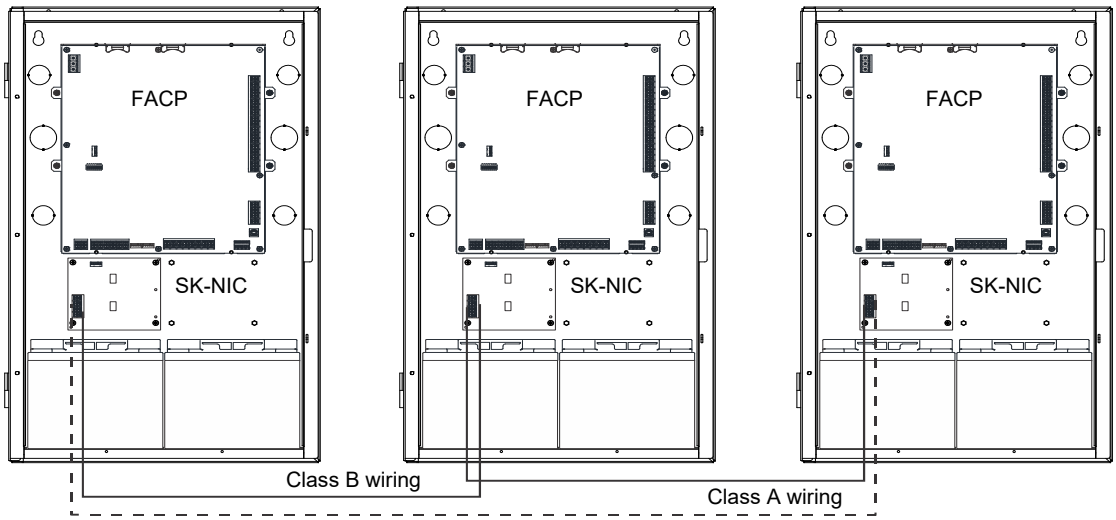

Figure 5.2 Internal SK-NIC Wiring Option

5.3 SK-NIC Wiring Options

Linking a group of 6808 panels requires the use of a network interface card with each panel. The SK-NIC connects to other linked units using unshielded, twisted-pair wiring or fiber-optic cable.

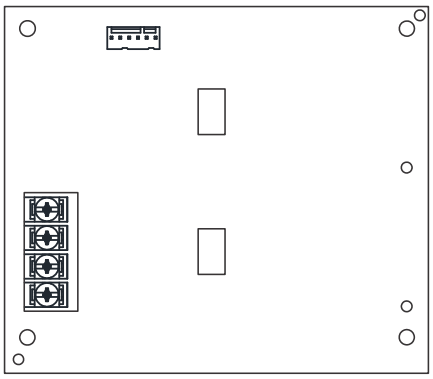

Figure 5.3 SK-NIC Network Interface Card

5.3.1 Fiber Loop Modules

Two types of fiber- optic modules are available to use to transmit and receive communication with the SK-NIC. For more information, see the *SK-FML/ SK-FSL Installation Instructions* P/N LS10178-001SK-E.

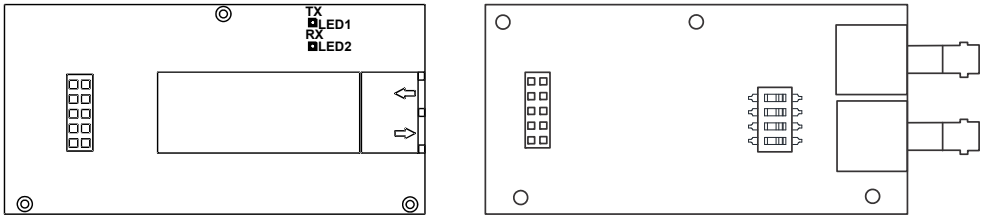

SK-FSL Single-Mode Fiber Module SK-FML Multi-Mode Fiber Module

Figure 5.4 Types of Fiber Loop Modules

The SK-FML (Fiber-Optic Multi-Mode) and SK-FSL (Fiber-Optic Single-Mode) are plug-in fiber loop modules. The two types of fiber optic modules are used as one channel to transmit or receive communications with the SK-NIC, ARCNET communication circuit.

The following describe the two types of fiber optic modules.

- The SK-FML is a fiber module that allows the multi-mode fiber to link between nodes.
- The SK-FSL is a fiber module that allows the single-mode fiber to link between nodes.

Each fiber loop module can Transmit (TX) and Receive (RX) fiber-optic cable connecting to the SK-NIC. Up to two fiber loop cards can be added to the SK-NIC, and both cards may be combined in the same configuration.

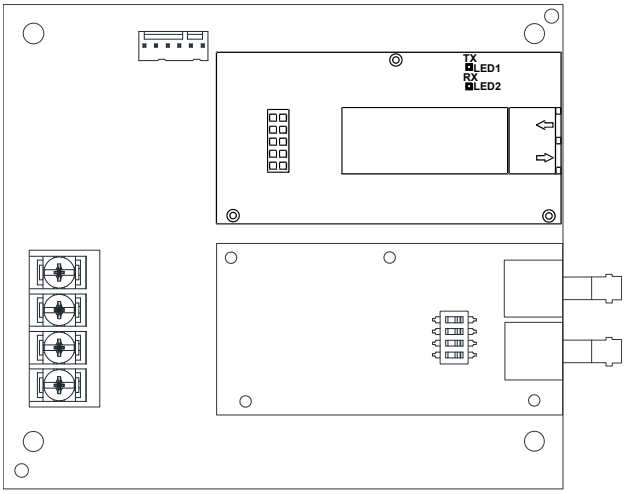

Figure 5.5 SK-NIC with Fiber Loop Modules

5.3.2 SK-NIC Mounting Kits

SK-NIC can be mounted in an accessory cabinet. An accessory kit is necessary to install the SK-NIC outside of the 6808 cabinet.

- The SK-NIC-KIT includes a SK-NIC, small cabinet with locking door, cable, and mounting hardware.
- The 5815RMK includes a small cabinet with locking door and mounting hardware.

5.4 SK-NIC Installation

The SK-NIC is designed to mount on one of the SLC standoff sets inside the cabinet or remotely using the accessory cabinet.

Use the following steps to properly mount the SK-NIC inside the 6808.

1. Align the SK-NIC over the standoffs on the back of the 6808 cabinet and secure with supplied screws. Refer to Figure 5.2 for location of standoffs.
2. Use the included 6-pin cable harness to connect the 6808 to the SK-NIC. Connect the SK-NIC to the pin connector on the control panel labeled, Data Network.

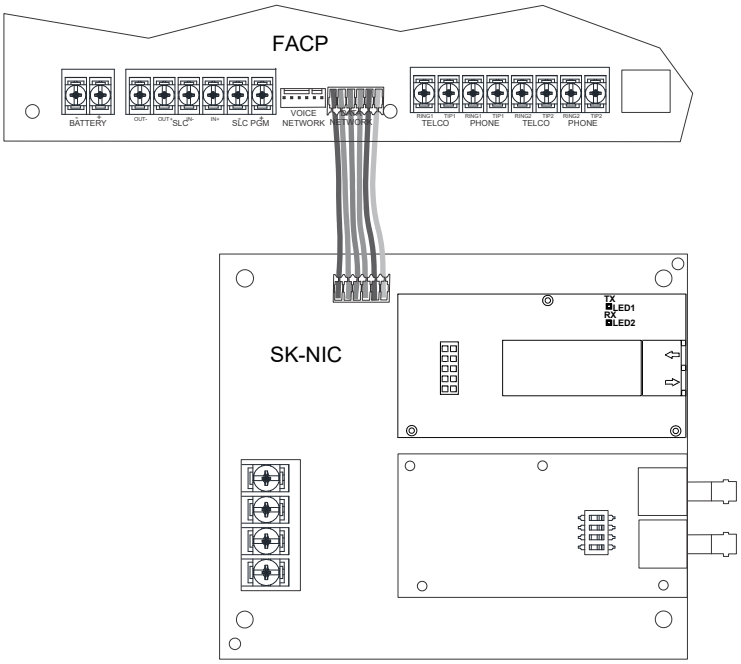

Figure 5.6 Panel to SK-NIC Connection

3. Each SK-NIC has the ability to monitor for earth ground faults on the twisted pairs connected to Port 1 of its terminal block, TB2. Earth fault detection for any wiring at Port 2 of TB2 is done at the next/previous SK-NIC due to these wiring connections being connected to Port 1 of TB2 at the next/previous SK-NIC.
4. Unused optic ports on fiber loop modules must have their dust caps placed on the port.
5. Based on the type of data medium chosen, run the twisted pair wiring/fiber optic cable to the next SK-NIC using a Class B or Class A wiring method. A combination of both medium types can be used. See Figure 5.7, Figure 5.8, Figure 5.9, and Figure 5.10 for SK-NIC wiring examples.

5.4.1 SK-NIC Remote Mounting

Follow the steps above except, the 6-pin cable that runs from the SK-NIC to the 6808 must be run in conduit. Refer to Figure 5.1.

5.4.2 Wiring

Unshielded Twisted Pair Wiring between Multiple Panels

Unshielded twisted-pair wiring between multiple panels is shown below in Figure 5.7. Class X wiring is shown with a dotted line.

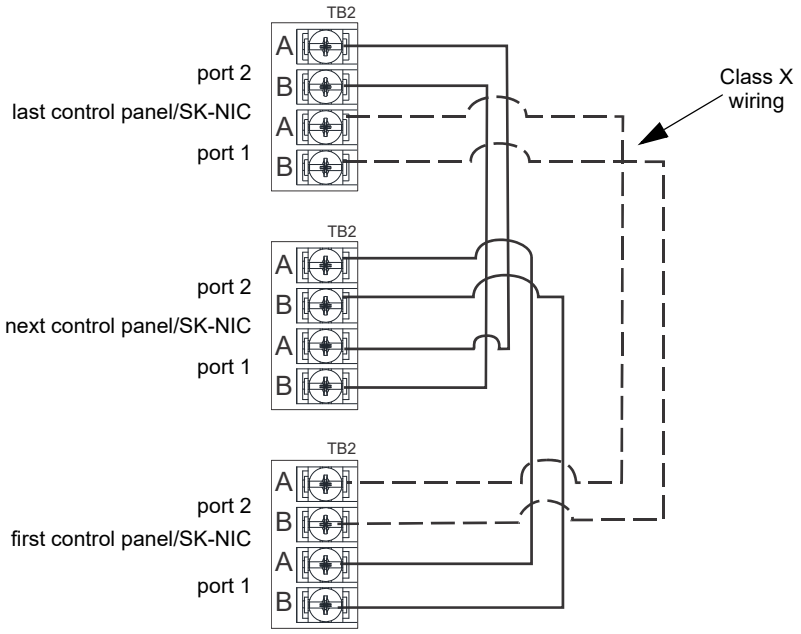

Figure 5.7 Twisted Pair Wiring Configuration

Fiber-Optic Multi-Mode Wiring between Multiple Panels

Fiber-optic cable between multiple panels is shown below in Figure 5.8 and Figure 5.9. Class X is shown with a dotted line.

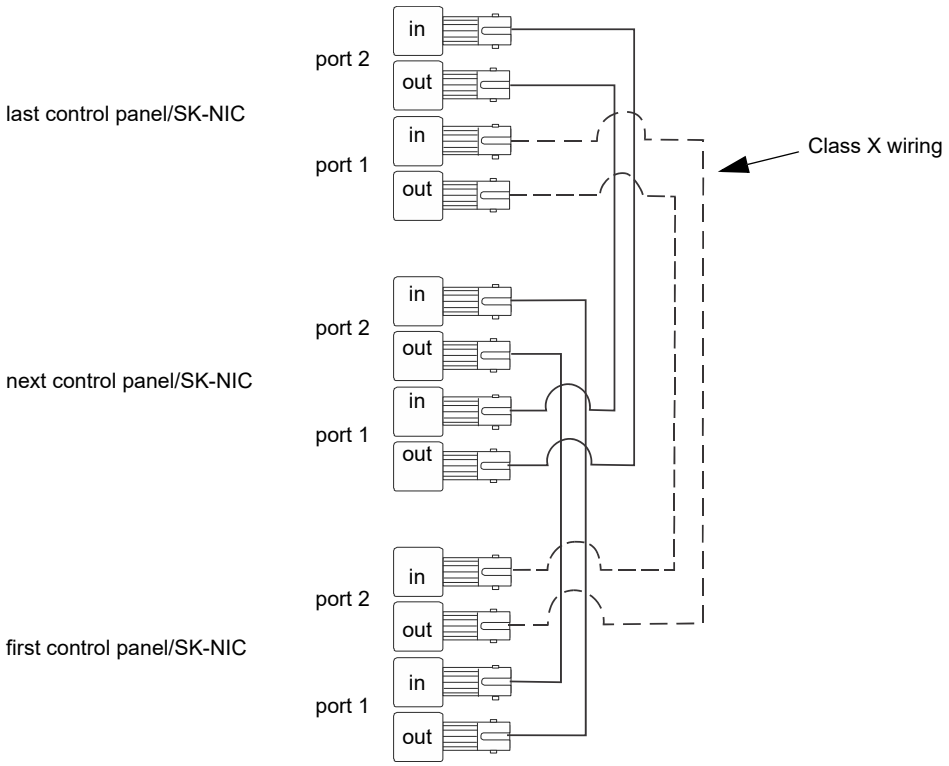

Figure 5.8 Fiber-Optic Wiring Multi-Mode Example

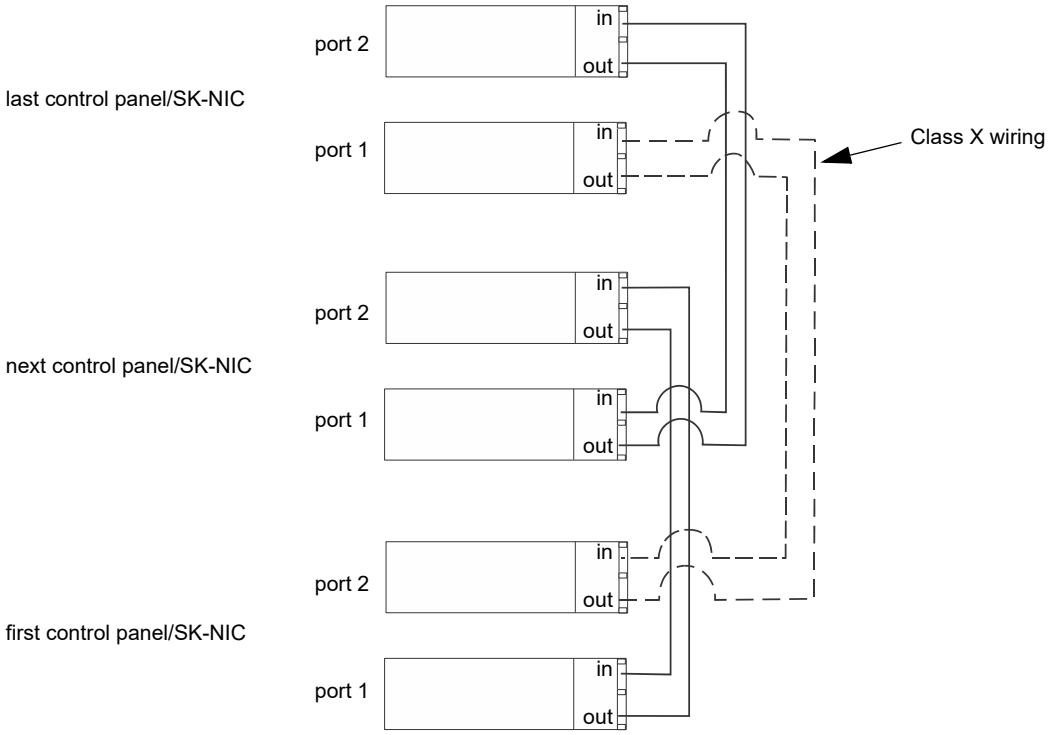

Figure 5.9 Fiber-Optic Wiring Single-Mode Example

Fiber-Optic and Twisted-Pair Wiring between Multiple Panels

A mixture of fiber-optic cable and twisted pair wiring between multiple panels is shown in Figure 5.10. Class X cabling is shown with dotted line.

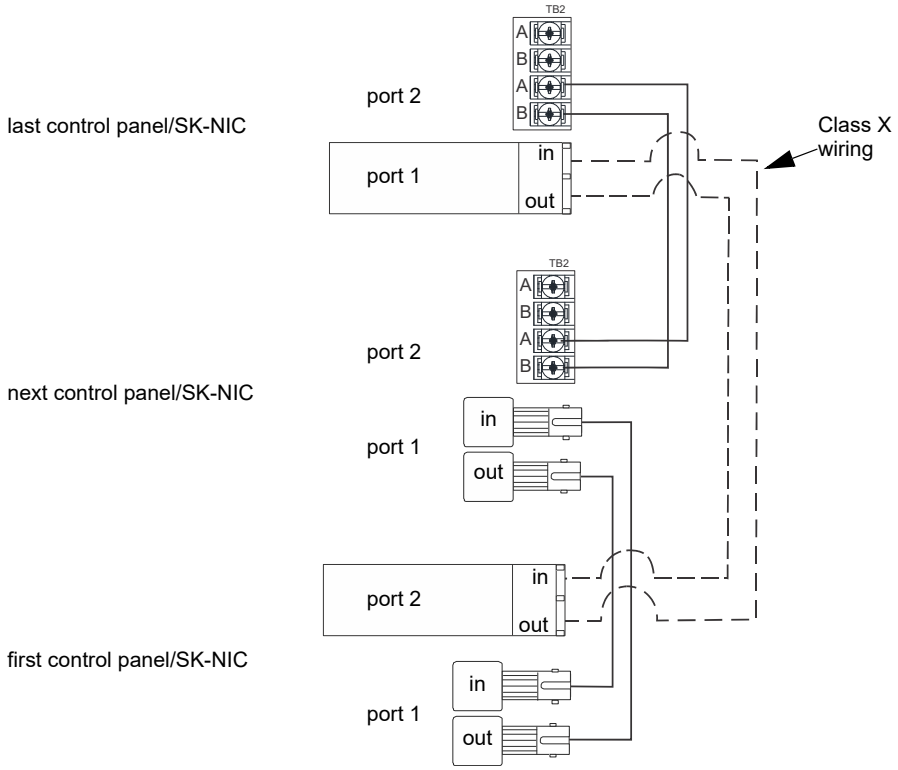

Figure 5.10 Twisted-Pair and Fiber-Optic Combination Wiring Example

5.5 Setting the ID for Each Panel

NOTE: It is important that much thought is given when choosing the network IDs for each panel. It is difficult to change the IDs once panel programming has begun.

Use the DIP switch positions 1 through 5 to set the ID for each panel. Note that switches 7 and 8 are not used and should remain in the OFF position. See the figure below for possible DIP switch settings. Address 0 is an invalid address and cannot be used.

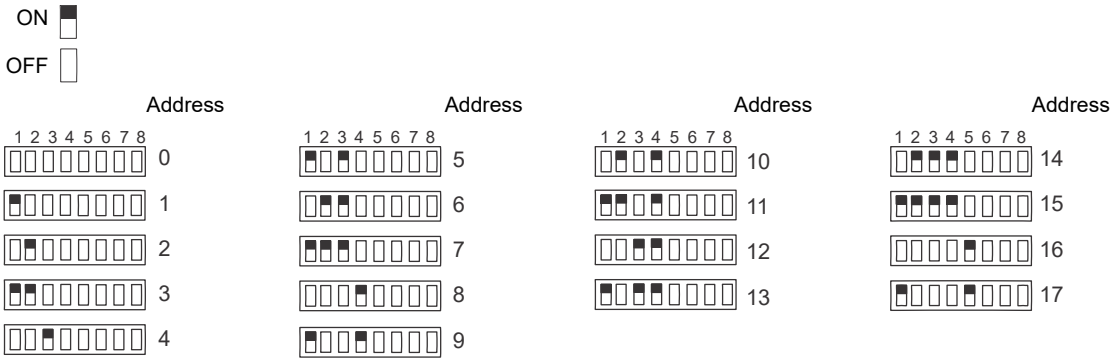

Figure 5.11 PanelID Settings

Section 6: Network Management

NOTE: Although the word “Network” is used in this section, it applies to system menus that relate to the physical wire and/or fiber-optic connections between multiple panels. The 6700 does not support peer-to-peer networking.

6.1 Network Diagnostics

6.1.1 Ping Panel

The Ping Panel Menu allows you to continually ping any panel programmed into the network. As the selected panel is being pinged, the Ping Panel screen will display the reply time, minimum and maximum reply times, and sent and received counters.

1. Login to the panel. The panel will automatically access the Main Menu.
2. Select 5 for Network Diagnostics.
3. Press 1 to enter the Ping Panel Menu.
4. Press the up or down arrow key to select Network Panel ID. Press ENTER to Ping panel.

6.1.2 Data Network Status

The Data Network Status screen will display statistics that are indicators of Network performance.

1. Login to the panel. The panel will automatically access the Main Menu.
2. Select 5 for Network Diagnostics.
3. Press 2 to enter the Data Network Status Menu.

6.2 Network Programming

This section of the manual describes how to program network options using the built-in annunciator. All options described in this section can be programmed using the HFSS Software Suite. HFSS must be used to edit site assignments.

6.2.1 Learn Network

The Learn Network Menu shows you all of the panels connected to the network. Any panel that has been programmed into the network will appear as a “member.” Any panel that is connected to the network but not programmed into the network will appear as a “guest.” You can add guest panels to the network by changing their status to member in this menu. Panels showing OK are currently responding on the network. Panels not showing OK have either been removed or are not responding due to networking problems. See Section 6.1 for Network Diagnostics.

1. Login to the panel. The panel will automatically access the Main Menu.
2. Select 6 for Network Programming.
3. Press 1 to enter the Learn Network menu.
4. Press ENTER to add or remove panels connected to the network as member or guest.

NOTE: If adding panels to network, the system will automatically run the Sync Network Options. You will be required to select which panel to distribute network options from. See Section 6.3.

Incompatible Panel

If you try to add an incompatible panel as a member to the network, the Learn Network fails and an error message appears.

The incompatible panel remains a “guest”. To continue, remove the incompatible panel from the network.

6.2.2 Edit Network Names

The Edit Network menu allows you to edit the panel name and edit the panels site name.

Edit Panel Names

1. Login to the panel. The panel will automatically access the Main Menu.
2. Select 6 for Network Programming.
3. Press 2 to enter the Edit Network Names Menu.
4. Press 1 to Edit Panel Name. Choose Panel to edit.

Edit Site Names

5. Press 2 to Edit Site Name. Choose Site to edit.

See Appendix A for a list of available characters and their numeric designators.

6.2.3 Edit Panel ID

This menu option allows you to change the current Network Panel ID. It is best to carefully consider the network ID setting for each panel. Take into account any future panels that will be added to the network (future wiring of two buildings together). The Network Panel ID setting has to be unique for each panel on the network.

This menu will allow you to change the currently assigned Network Panel ID to the current Network ID DIP switch setting. The system will be down as the panel needs to reboot in order to complete the transition.

When using the PC configuration software to program the panels, the Network Panel ID will be locked from future editing. The only way to change it will be to restore defaults and use this menu again.

Edit the Network Panel ID

1. Login to the panel. The panel will automatically access the Main Menu.
2. Select 6 for Network Programming.
3. Press 3 to enter the Edit Panel ID menu.
4. If the Network Panel ID is changed and valid, the system will ask you to confirm the change. If it is not correct, you can change the DIP switches at this time.
5. Press up to select YES and press ENTER to confirm.

6.2.4 Computer Access

An installer at the panel site can initiate communications between the panel and a computer running the HFSS Honeywell Fire Software Suite (see also Section 7.3). In order for this communication to function properly, both the computer (running the software) and the control panel must have matching computer access numbers and computer codes.

To program computer access information:

1. Login to the panel. The panel will automatically access the Main Menu.
2. Select 6 for Network Programming.
3. Press 4 to enter the Computer Access menu.
4. Enter the computer access number (up to 6-digits), then press ENTER.
5. Enter the computer code, then press ENTER.
6. Enter the computer phone number, the panel will dial to connect to a downloading computer (up to 40-digits), then press ENTER.

6.2.5 Access Codes

Access codes provide the user access to the control panel functions. Each access code can be customized for each user. This feature allows some users the ability to access the programming and other higher level panel functions, while other users may only need access to the lower level functions (such as, preforming fire drills or acknowledging trouble conditions). Access codes can only be assigned by someone with an Administrator profile. Refer to Section 9.2.1 on page 98 for more information on administrative permissions. Once an access code has been assigned by an administrator, a user has the ability to change it.

1. Login to the panel. The panel will automatically access the Main Menu.
2. Select 6 to access the Network Programming Menu.
3. Select 5 to access the Access Codes.

   The display reads: ***Select Profile 01***
   Fire Fighter's Key
4. Press the up or down arrow key to select the Access Code you want to edit.
5. Then, press ENTER.

Profile Edit Menu

From the Profile Edit Menu, the user can change their name and access code only.

■ Edit Name

6. See Appendix A for a list of available characters and their numeric designators.
7. Then press ENTER to finish.

■ Edit Access Code

8. Enter new access code (minimum of 4 digits, maximum of 7 digit).
9. Press ENTER.
10. Enter code again. Press ENTER.

6.2.6 Communicator Options

Communicator options provide the configuration for reporting events to a Central Station.

1. Login to the panel. The panel will automatically access the Main Menu.
2. Select 6 for Network Programming.
3. Press 6 to enter Communicator Options Menu.

Communicator Assignments

Each panel in the 6808 communication link specifies which communicator is used for reporting. The communication link capability of the linked system allows all panels to use the same communicator providing an economical solution for reducing the number of paths required for reporting purposes. A communicator is specified by panel number. The communication link will be used to report events according to the communicator report table.

Communicator Miscellaneous

When using the SIA reporting format, the communicator sends information according to the SIA Reporting Type. The selections for this option are:

1. pi modifier (default)
2. Panel ID

NOTE: Only the SIA format sends the panel ID when reporting.

Receiver Configuration

The 6808 communication link can report events to as many as 68 receivers. See Appendix B for panel/receiver relationship numbers. Each receiver can be assigned reporting credentials. When using a format that supports phone numbers, it can be up to forty digits long.

1. From Login to the panel. The panel will automatically access the Main Menu.
2. Select 6 for Network Programming.
3. Press 6 to enter Communicator Options Menu.
4. Select 3 for Receiver Configuration.
5. Select Panel to Program and press ENTER.
6. Enter the receiver number that you want to report to. The receiver numbers available will correspond with what panel number you entered. Receiver numbers are populated based on panel number and audited to allow only the 4 appropriate receivers. See Appendix B for receiver number.

The available format choices are as follows.

- Contact ID
- SIA500
- SIA8
- SIA20
- Ethernet
- Cellular
- UNUSED

Communicator Reporting Table

The communicator Report Table specifies event reporting for each panel on the communication link. Each row in the table specifies a panel, event types to report, primary and backup receiver numbers, and report by point or zone. Associated with the receivers are account number and daily test option. The table can have up to 99 rows.

1. Login to the panel. The panel will automatically access the Main Menu.
2. Select 6 for Network Programming.
3. Press 6 to enter Communicator Options Menu.
4. Select 4 for Communicator Reporting Table.
5. Press * to add rows, Press ENTER to edit data.

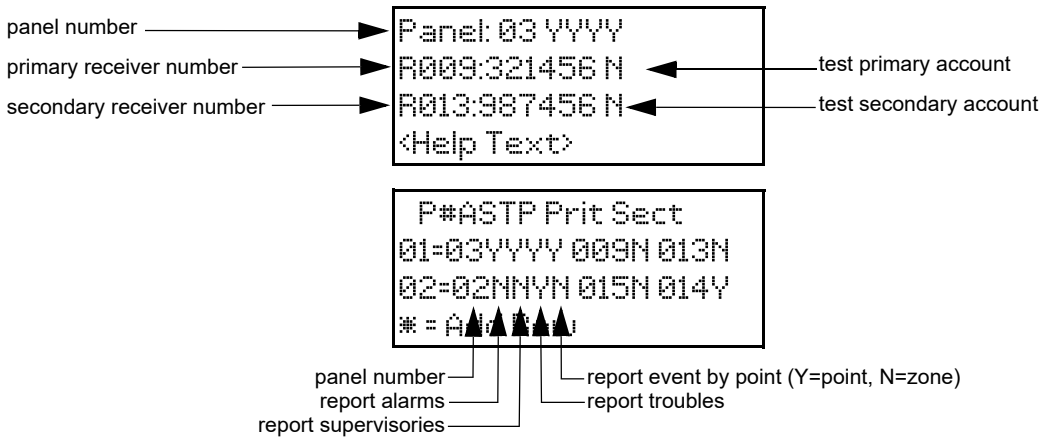

Figure 6.1 Communicator Reporting

6.3 Sync Network Options

If after making changes to network programming, the distribution of network options fail, the system will report a trouble of network options out of sync. Use this menu to redistribute changed options to the rest of the network. The user will be required to choose a panel to source the options from. Scroll down through the informational message and press ENTER to view the Select Source screen.

1. Login to the panel. The panel will automatically access the Main Menu.
2. Select 6 for Network Programming Menu.
3. Select 8 for Sync Network Options.
4. Select from which panel to source the options.

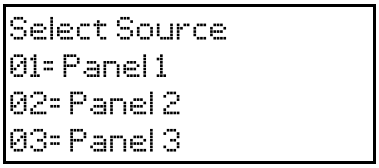

Select the line number. #1 in this example.

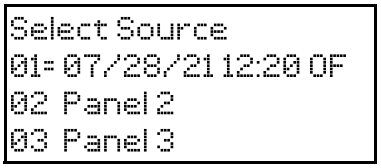

Line #1 scrolls to show the date.

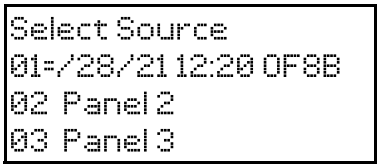

Scroll down to see checksum.

Figure 6.2 Sync Network Options

NOTE: If you try to sync with the network and an incompatible panel is found, an error message will display.

6.4 Network Management Quick Reference

Menu	Options/Defaults				Comments
Learn Network	Guest or member	Add or remove panels into the network			See Section 6.2.1
Edit Network Names	Panel Names	Network Panel ID	Edit Panel Names		See Section 6.2.2
	Site Names	Edit Site Member	Edit Site Names		
Edit Panel ID	Change current panel ID				See Section 6.2.3
Computer Access	Computer Access Number	*123456			See Section 6.2.4
	Computer Code	*0			
Access Codes	Select Profile (01 - 20)	Edit Name			Profile 1 is the profile that dictates what functions the Firefighter Key has access to. Because this is the profile for a keys, the user name and the access code can not be edited for this profile.
		Edit Access Code			
Communicator Options	Communicator Assignments	Select Panel	Primary	0= unused	See Section 6.2.6
	Communicator Miscellaneous	SIA Options	Enable pi SIA Modifier		See “Communicator Miscellaneous” on page 62.
			Include Panel ID in SIA Reporting		
	Receiver Configuration	Select Panel	Select Receiver	Receiver Number (1-4)	See “Receiver Configuration” on page 62.
		Receiver Format	Contact ID		
			SIA500		
			SIA8		
			SIA20		
			Ethernet		
			Cellular		
			UNUSED		
		Receiver Credentials			

Table 6.1 Network Management Quick Reference List

Menu	Options/Defaults		Comments
Communicator Options	Communicator Report Table	Panel	See “Communicator Reporting Table” on page 62.
		Report Alarms	
		Report Supervisory	
		Report Troubles	
		Report Events by Point	
		Primary Receiver	
		Primary Account	
		Test Primary Account	
		Secondary Receiver	
		Secondary Account	
		Test Secondary Account	
Sync Network Options			See Section 6.3.

Table 6.1 Network Management Quick Reference List (Continued)

Section 7: Programming Overview

This section of the manual is to give you an overview of the programming process. Please read this section of the manual carefully, especially if you are programming the control panel for the first time.

The JumpStart Auto-programming feature automates many programming tasks and selects default options for the system. You will run JumpStart at least once when you are installing the system. See Section 7.1 for details. After you run JumpStart, you may need to do some additional programming depending on your installation. Section 8 of this manual covers manual programmable options in detail.

Programming the panel can be thought of as a three part process. You must program:

- System options. These are options that affect general operation of the panel (see Section 8.6 for details).
- Options for input points and zones. These are primarily options that control detection behavior of devices (see Sections 8.3 and 8.5 for details).
- Options for output points and groups. This includes selecting characteristics for output groups and mapping output circuits to output groups (see Section 8.4 for details).

7.1 JumpStart Auto-programming

The JumpStart Auto-programming feature allows for faster system setup. When you run JumpStart Auto-programming, the panel searches for expanders and SLC devices not currently in the system. The new devices are added in their default configuration. At the end of JumpStart, you can choose to not accept the new devices and go back to the previous configuration. JumpStart saves the installer from having to program options for each device. Depending on the application, the installer may need to make some changes after JumpStart completes. See Section 7.1.3 for complete details about running JumpStart.

7.1.1 Input Points

The first JumpStart on the panel in default configuration will determine the number and type of input points (detectors or contact monitor modules) on each SLC loop. JumpStart Auto-Programming assigns the correct detector type (heat, ionization or photoelectric), so the installer does not need to edit the device type for detectors. Any contact monitor modules on the system will be assigned type “Manual Pull.” The installer will need to manually change the switch type if manual pull is not correct.

The first JumpStart Auto-programming creates one zone (Zone 1) and assigns all input points to Zone 1. Zone 1 is mapped to Output Group 1. After JumpStart completes, you can re-map to configure a multiple zone/output group system. For a general explanation of mapping, see Section 7.2.

7.1.2 Output Points

JumpStart Auto-programming creates three output groups and assigns output circuits as follows:

Circuits 1-4: Configured as Notification and assigned to Group 1. JumpStart Auto-programming automatically programs Zone 1 to activate Group 1 using constant on output when an alarm condition occurs.

Circuit 5 (Relay 1) Assigned to Group 249. JumpStart Auto-programming automatically programs Zone 1 to activate Group 249 using constant on output when a supervisory condition occurs.

Circuit 6 (Relay 2) Assigned to Group 250. JumpStart Auto-programming automatically programs Zone 1 to activate Group 250 using constant on output when an alarm occurs.

Addressable output points (Relay modules, NAC Modules, Sounder Bases, Relay Bases):
All addressable relay devices will be configured as “Output Pt” (general purpose output point) and assigned to Group 1.

NOTE: Relay output is constant even if the zone activating the relay is programmed with an output pattern.

7.1.3 Running JumpStart Auto-programming

Run JumpStart Auto-Programming immediately after you have addressed and connected all input devices (detectors, pull stations, etc.) and output devices (notification appliances, relays, etc.).

NOTE: If you need to install a few devices after you have run JumpStart, you can install them manually. Follow instructions in Section 8 for configuration.

To run JumpStart, follow these steps.

1. Login to the panel and access the main menu.
2. From the Main Menu Select 7 for the Program Menu.
3. From the next menu, select 6 for JumpStart.
4. When the message, “SLC FAMILY” message appears, select SK or SD, depending on the type of SLC devices the panel is using, and press ENTER to accept.
5. A series of messages displays for the next several seconds. JumpStart scans the SLC loops for devices. This can take several minutes, depending on the number of devices attached.
6. When the message “Configuring System Done” displays, press any key to continue.

7. Select one of the following options from the menu that displays.

1- Review System	Press 1 if you need to review the JumpStart configuration. The Review System menu will appear. Press 1 to review Entire System or Press 2 for Changes Only.
2- Repeat JumpStart	Press 2 if you need to rerun JumpStart for any reason.
3- Accept Configuration	1. If you are ready to make the JumpStart configuration permanent, select 3. 2. The system will ask you if the installation contains any Addressable Duct Detectors Used. If there are none, select 2 for No and skip to Step 8. If the system contains duct detectors, select 1 for Yes and continue with Step 3. 3. From the list that displays, select the SLC that contains the duct detectors. 4. The first photoelectric or ionization detector on the system will display. Select 1 for DUCT and 2 for NonDUCT. 5. Press up arrow to select the next detector. Select 1 for DUCT and 2 for NonDUCT. Continue until all duct detectors have been selected. (Note: You can move backwards through the list with down arrow). 6. When you reach the last detector on this device, press left arrow. 7. The system will ask you if there are any duct detectors used. If there are, select 1 for Yes and the message will ask, Have All Addressable Duct Detectors Been Identified? Left arrow for “No”, Right arrow for “Yes”. If there are no more duct detectors, continue with Step 8. 8. The system will restart with the saved JumpStart configuration. 9. After the system resets, it will use the new JumpStart configuration.
4 - Discard Changes	If you want to discard the changes, and keep the configuration you had before running this JumpStart press 4.

Table 7.1 JumpStart Programming Steps

7.2 Mapping Overview

This section of the manual is an overview of mapping. Details about how to select mapping options appear in the appropriate subsections in Section 8.

Mapping is an important concept with the control panel. In general terms, mapping is assigning or linking events to outputs that will activate when events occur. You do this by assigning input points to input zones, output points to output groups and then linking or mapping zones and output groups.

Figure 7.1 is a brief overview of the concept of mapping. The next several pages of the manual show these subjects in detail.

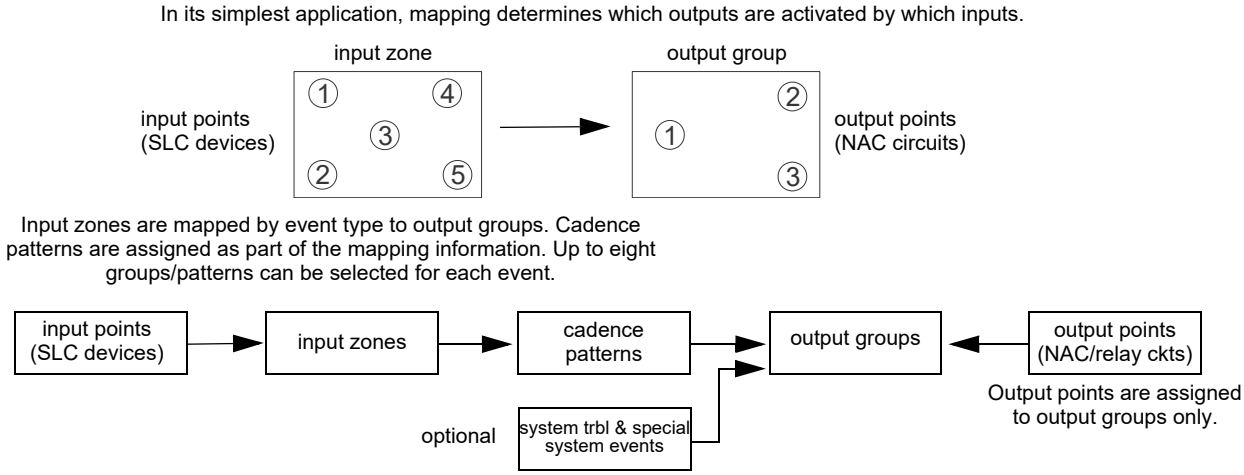

Figure 7.1 Mapping Overview

NOTE: Mapping cannot be programmed through the annunciators. It can only be programmed through the HFSS Honeywell Fire Software Suite.

7.2.1 Input Point Mapping

Input points are assigned to input zones. Any input point can be assigned to any input zone. (Input points can be assigned to one zone only. An input point can be designated as “Unused,” which means it has not been assigned to a zone.)

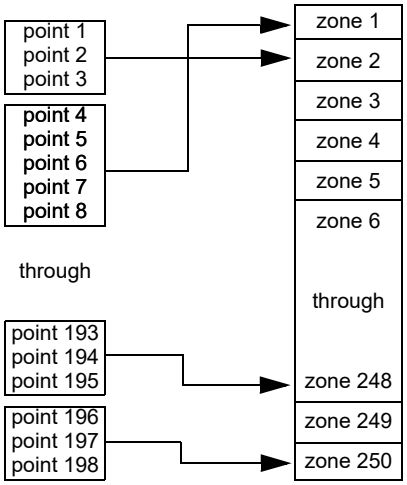

Figure 7.2 Input Point Assignment Example

7.2.2 Output Circuit Mapping

Figure 7.3 is a simple example showing how to assign notification and relay output circuits to groups. For an example of a simple floor above/floor below application, see Figure 7.5.

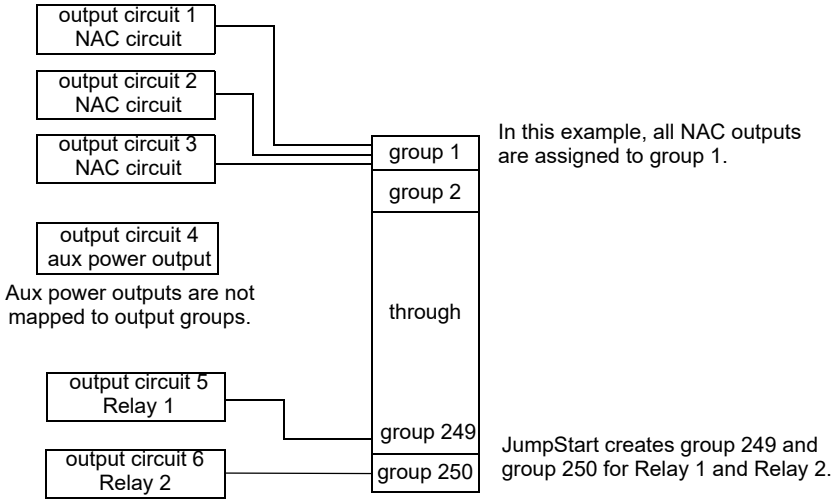

Figure 7.3 Assigning Output Circuits to Groups (Example)

7.2.3 Event Mapping

There are 11 types of Zone events, 14 types of Panel events, and 6 types of Site events that can be mapped. For each event type, you can activate the output groups with specific output patterns. Mapping examples are shown in Figures 7.4 and 7.5.

System	Zone	Panel	Site
Fire	Manual Pull Alarm	System Aux 1 Alarm	Fire Drill
	Water Flow Alarm	System Aux 2 Alarm	General Fire Alarm
	Detector Alarm (heat or smoke detectors)		General Fire Supervisory
	Zone Aux 1 Alarm		General Fire Pre-Alarm
	Zone Aux 2 Alarm		
	Interlock Alert		
	Interlock Release		
	Pre-Alarm		
	Fire Supervisory		
	Status Point		
	CO Alarm		
	CO Supervisory[1]		
Advisory	Trouble	SBUS Expander Trouble	General Trouble
	Status Point Active	SBUS Class A Trouble	Site Silenced
		SLC Loop Trouble	
		AC Loss Trouble	F1 Key Active
		Battery Trouble	F2 Key Active
		Ground Fault Trouble	F3 Key Active
		Phone Line Trouble	F4 Key Active
		Reporting Account Trouble	
		Printer Trouble	
		Aux Power Trouble	
		System Switch Trouble	
		Output Group Trouble	

Table 7.2 Event Mapping

1 Temporal 4 coding cannot not be used for NAC circuits on CO Supervisory events.

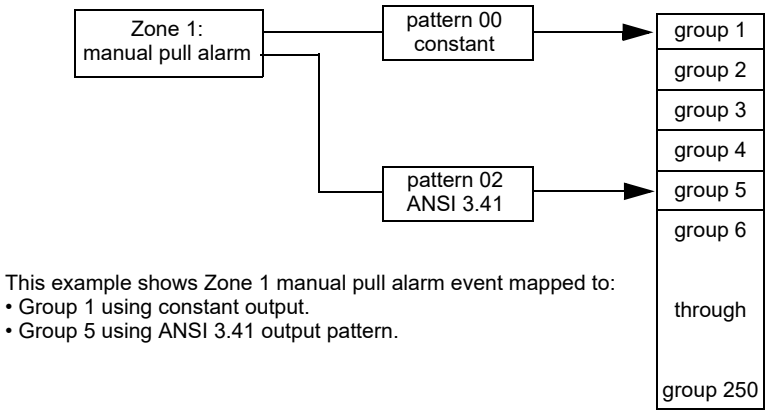

Figure 7.4 Example of Zone Events Mapped to Output Groups and Patterns

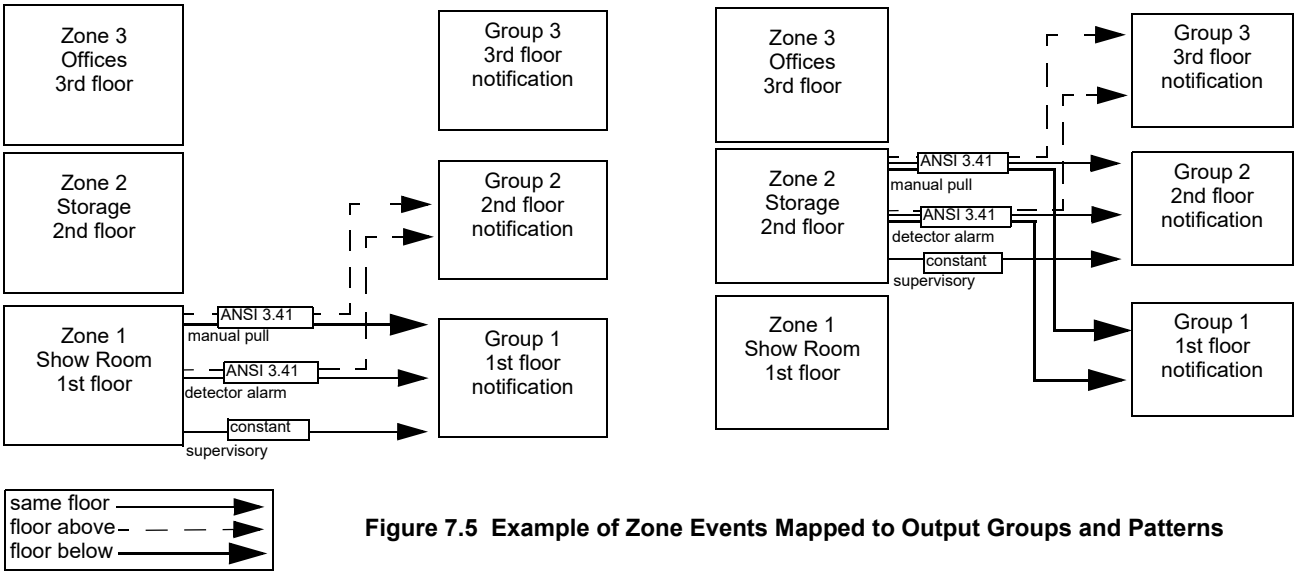

Figure 7.5 Example of Zone Events Mapped to Output Groups and Patterns

7.2.4 Mapping LED Points

Figure 7.6 is a simple example showing how LED points are mapped to zones and output groups. Typically you would create two output groups for each zone, one for alarms and one for troubles. (LED points are available when Models 5865-3/4 and/or 5880 are used with the system.)

Mapping LEDs to Zones and Output Groups

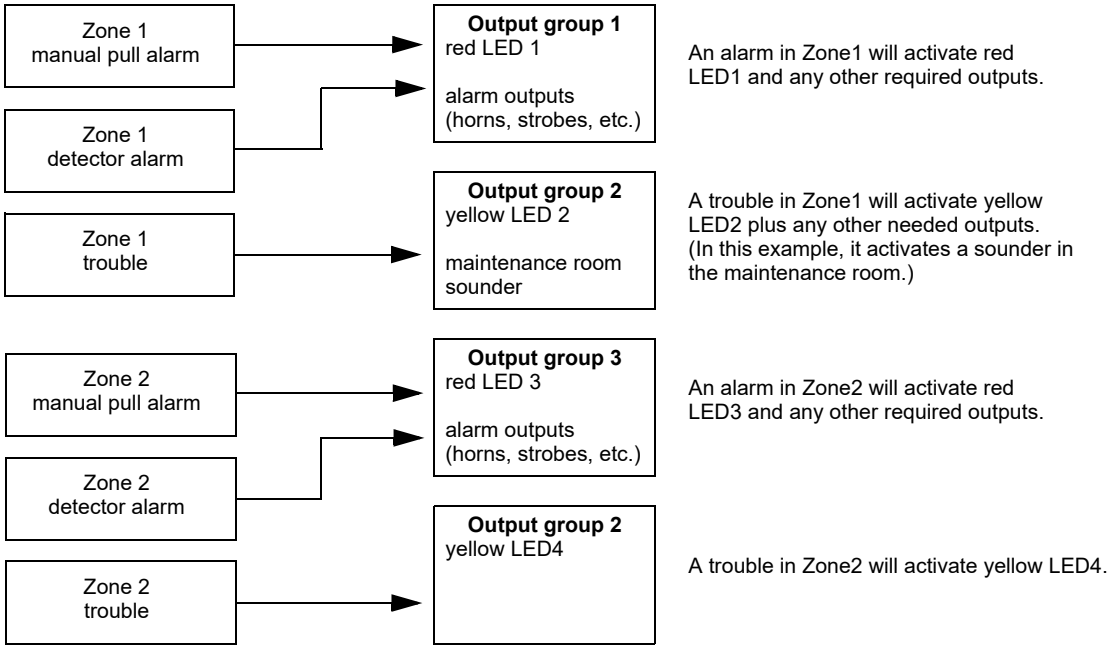

Figure 7.6 Example of LED Points Mapped to Output Groups (applies to Models 5865-3/4 and 5880)

7.2.5 Mapping LED Points for a Networked System

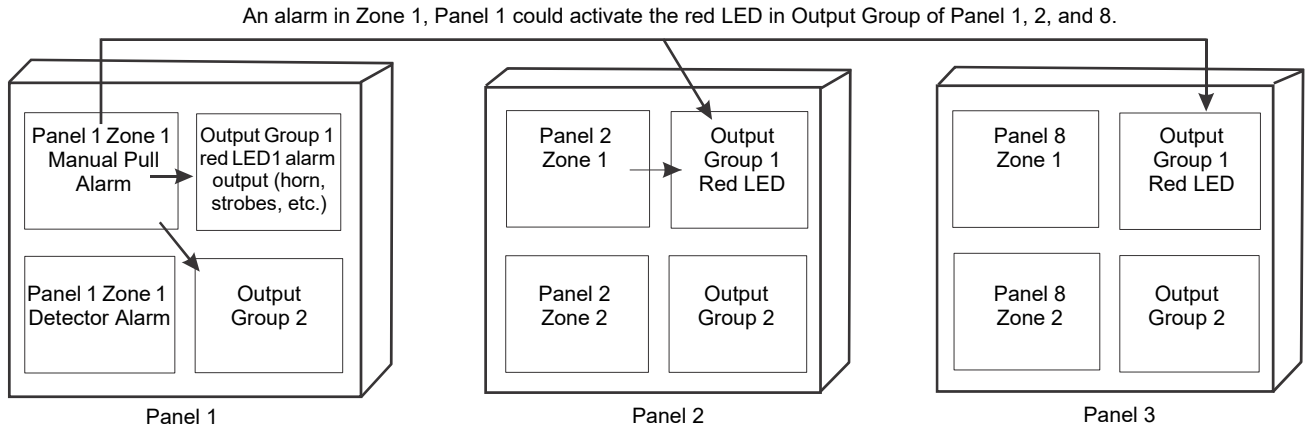

Note: If the panels are not in the same site, the mapping must be set to non-latching to disable the LED when the Trouble/Alarm is cleared.

Figure 7.7 Example of Expanding Mapping of LED Points Across Panels

7.3 Programming Using the HFSS Software Suite

You can use the HFSS Honeywell Fire Software Suite to program the control panel on-site (personnel will need to be on-site during the upload or download process). HFSS is a software package that lets you easily program the control panel using a Windows-based computer. HFSS is needed for mapping. When using HFSS, you can set up the programming options for the panel, save the options in a file, then download the file to the panel. You can connect to the control panel directly using the onboard USB or Ethernet. Updates are available at www.silentknight.com

7.4 Programming Using an Annunciator

You can program the control panel from a system annunciator, using either the control panel's onboard annunciator or a 6860, 6855, or 5860 remote annunciator.

The following subsections describe programming basics, including a description of editing keys available for programming and how to move through programming menus. Section 8 contains specific information about individual programming options.

NOTE: Output mapping cannot be programmed through the onboard and remote annunciators. Mapping is only available through the HFSS Honeywell Fire Software Suite.

7.4.1 Entering / Exiting Panel Programming

Entering Programming Mode

1. Login to the panel. (Refer to Section 9.2.1).
2. Select 7 for the Programming Menu. See Section 8 for detailed information and Section 7.5 for a quick reference listing all programmable options and JumpStart defaults.

Exiting Programming Mode

When you have completed working with the menus, press the left arrow several times until you exit from the Programming Mode. Two prompts will display. At the first prompt, a message appears indicating to exit the Program Menu (select Yes or No as appropriate). At the second prompt, a message indicates if the user accepts all changes. If you select No, any changes you have made since you entered the Program Menu will have no effect.

7.4.2 Moving through the Menus

Figure 7.8 shows how to move or navigate through program menu screens using the Main Menu screen as an example.

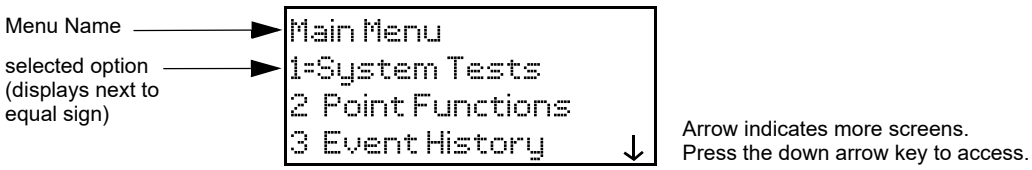

Figure 7.8 Moving Through the Program Menu

7.4.3 Selecting Options and Entering Data

There are several ways to make programming selections using the control panel depending on which screen you are currently using. The chart below is a generic explanation.

To	Press
Select from a menu	Enter the number of the option.
Enter numeric data	Press the appropriate number on the annunciator.
Enter text (alphanumeric data)	Enter each character individually using the Up and Down arrow keys until the one you wish to select displays. Then press right arrow to select the character. See Appendix A for a complete list of characters.
Select from a scrolling list	Use up arrow and down arrow to move through a list of available options. When the option you want to select is displayed, press ENTER.

Table 7.3 Menu Options

7.5 Programming Menu Quick Reference

This section of the manual lists all Panel Programming options in the order they appear on the sub-menus. Default settings are indicated in text or marked with an asterisk (*). The comments column provide quick information and a reference to a section (if applicable) which has more detailed information.

Menu		Options/Defaults		Comments
Module	Edit Module	Select Module	Edit Module ID	Section 8.2.1
			Enter Module Name	
			Edit Module specific options	
	Add Module	5824 Serial/Parallel/IO		Section 8.2.2
		6860 LCD Annunciator		
		5860 LCD Annunciator		
		6855 LCD Annunciator		
		5895XL Power Supply		
		5496 NAC Expander		
		5880 LED I/O Module		
		5865 LED Annunciator Module		
		SK-NIC Network Interface Card		
	Delete Module	Select Module		Section 8.2.3
	View Module List	Select Module		Section 8.2.4

Table 7.4 Programming Menus Quick Reference List

Menu		Options/Defaults				Comments
Zone	Edit Zone	Select Zone	Edit Zone Name			See “Edit Zone Name” on page 82.
			Zone Properties	Verification Type	*1-Count	See “Edit Zone Properties” on page 82.
					2-Count	
					Alarm Verif.	
					PAS	
					SNGL ILOCK	
					DBL ILOCK	
				Heat Temp Set	135° to 150°F	SD devices. See “Edit Zone Properties” on page 82.
					135° to 190°F	IDP or SK device. See “Edit Zone Properties” on page 82.
			Zone Accessory Opt	Single/Multi-station Cadence	00-23	See “Zone Accessory Options” on page 83.
				CO Single/Multi station Cadence	00-23	
				Local Zone	Yes	
					No	
	View Zone Points	Select Zone				Section 8.4.2
Group	Edit Group	Select Group	Group Name			See “Edit Group Name” on page 84.
			Group Properties	Template Override	Y or N	See “Edit Group Properties” on page 84.
				Allow Sys Override	Y or N	
				Dynamic Act/Template Override Cadence	00-23 (See Appendix C)	See “Edit Group Properties” on page 84 and Appendix C.
	View Group Points	Select Group				Section 8.4.2
	Edit OPG Template	Select template	Modify name and which output groups (OPGs) are in the template			Section 8.4.3

Table 7.4 Programming Menus Quick Reference List (Continued)

Menu		Options/Defaults					Comments
Point	SD and SK Devices on Internal SLC	Enter Pt	Select Module	UNUSED			Section 8.5
				SWITCH 1, 2, 3	MANUAL PULL		
					WATER FLOW	*LATCH	
						NON-LATCH	
					FIRE SUPERVSY	*LATCH	
						NON-LATCH	
					FIRE DRILL		
					SILENCE		
					RESET		
					P.A.S. ACK		
					ZONE AUX1	*LATCH	
						NON-LATCH	
					ZONE AUX2	*LATCH	
						NON-LATCH	
					SYSTEM AUX1	*LATCH	
						NON-LATCH	
					SYSTEM AUX2	*LATCH	
						NON-LATCH	
					DETECTOR		
					FIRE TAMPER	*LATCH	
						NON-LATCH	
					MANUAL RELEASE		
					INTERLOCK		
					STATUS POINT		
					CO DETECTOR SWITCH		
					CO SUPERV. DETECTOR SWITCH	*LATCH	
						NON-LATCH	
					TROUBLE_MON		
				NOTIF[1,2,3]	OUTPUT PT	Select Group	
					AUX CONST		
					AUX RESET		
					AUX DOOR		

Table 7.4 Programming Menus Quick Reference List (Continued)

Menu		Options/Defaults					Comments
Point (cont.)	SD and SK Devices on Internal SLC	Enter Pt	Select Sensor	RELAY [1,2,3]	OUTPUT PT	Select Group	Section 8.5
					AUX RESET		
					AUX DOOR		
				SLC LED [3]	LED Number	1-80	
					LED Function	Notif. Output	
						Unused	
				DETECTOR [1,2]	2-WIRE SMOKE	Select Zone	
				W. Gateway [1,2]			
				W SWITCH [1,2,4]	Same as SWITCH		
				W-RELAY [1,2,4]	Same as Relay		
				UNUSED			
				DETECTOR [1,2,3]	PHOTO	No Base	
						SDR BAS	Single station or Multi station Silence or Non-Silence
						RLY BAS	
						I-SdrBa (Intelligent Sounder Base) [1,2]	Latch or non-latch, Single station or Multi station, Silence or Non-Silence, volume high (default) or low
					ION	No Base	
						SDR BAS	Single station or Multi station Silence or Non-Silence
						RLY BAS	
						I-SdrBa (Intelligent Sounder Base) [1,2]	Latch or non-latch, Single station or Multi station, Silence or Non-Silence, volume high (default) or low

Table 7.4 Programming Menus Quick Reference List (Continued)

Menu		Options/Defaults					Comments
Point (cont.)	SD and SK Devices on Internal SLC	Enter Pt	Select Sensor	DETECTOR 1,,2,3	HEAT[1,,2,3]	No Base	Section 8.5
						SDR BAS	Single station or Multi station Silence or Non-Silence
						RLY BAS	
						I-SdrBa (Intelligent Sounder Base)[1,2]	Latch or non-latch, Single station or Multi station, Silence or Non-Silence, volume high (default) or low
					PHOTO DUCT[1,,2,3]	No Base	
						DCT RLY	
					ION DUCT[3]	No Base	
						DCT RLY	
					2-WIRE SMOKE [3]		
					ACCLIMATE [1,2]	No Base	
						SDR BAS	Single station or Multi station Silence or Non-Silence
						RLY BAS	
						I-SdrBa (Intelligent Sounder Base)	Latch or non-latch, Single station or Multi station, Silence or Non-Silence, volume high (default) or low
					HEAT-HT[1,2]	No Accessory base	
						SDR base	Single station or Multi station Silence or Non-Silence
						RLY base	
						I-SdrBa (Intelligent Sounder Base)	Latch or non-latch, Single station or Multi station, Silence or Non-Silence, volume high (default) or low
					PHOTO-HEAT[1,2]	No Accessory base	
						SDR BAS	Single station or Multi station Silence or Non-Silence
						RLY BAS	
						I-SdrBa (Intelligent Sounder Base)	Latch or non-latch, Single station or Multi station, Silence or Non-Silence, volume high (default) or low
					BEAM[1,2]		
				SUP DET 1,,2,3	Same function as DETECTOR	LATCH	
						NON-LATCH	

Table 7.4 Programming Menus Quick Reference List (Continued)

Menu		Options/Defaults					Comments
Point (cont.)	SD and SK Devices on Internal SLC	Enter Pt	Select Sensor (cont.)	CO FIRE[1,2]	CO ALARM/FIRE ALARM	No Base	
						SDR BAS	Single station or Multi station Silence or Non-Silence
						RLY BAS	
						I-SdrBA (Intelligent Sounder Base)	Latch or non-latch, Single station or Multi station, Silence or Non-Silence, volume high (default) or low
					CO ALARM/FIRE SUPR	No Base	
						SDR BAS	Single station or Multi station Silence or Non-Silence
						RLY BAS	
						I-SdrBA (Intelligent Sounder Base)	Latch or non-latch, Single station or Multi station, Silence or Non-Silence, volume high (default) or low
					CO SUPR/ FIRE ALARM	No Base	
						SDR BAS	Single station or Multi station Silence or Non-Silence
						RLY BAS	
						I-SdrBA (Intelligent Sounder Base)	Latch or non-latch, Single station or Multi station, Silence or Non-Silence, volume high (default) or low
					CO SUPR/ FIRE SUPR	No Base	Single station or Multi station
						SDR BAS	
						RLY BAS	
						I-SdrBA (Intelligent Sounder Base)	Latch or non-latch, Single station or Multi station, Silence or Non-Silence, volume high (default) or low
Point (cont.)	SD and SK Devices on Internal SLC	Enter Pt	Select Sensor (cont.)	W-Detector[1,2,4]	Photo[1,2,4]		Section 8.5
					Photo-Heat[1,2,4]		
					Heat[1,2,4]		
				W-SUP DET[1,2,4]	Same as W-Detector		

Table 7.4 Programming Menus Quick Reference List (Continued)

Menu		Options/Defaults					Comments
Point (cont.)	Internal Power and External Power	Enter Pt /Select Function	Select Sensor	UNUSED			Section 8.5
				B NOTIF	NOTIF OUTPUT	Select Group Supervised Yes or No	
					CONTROL CIRCUIT		
				A NOTIF	NOTIF OUTPUT	Select Group Supervised Yes or No	
					CONTROL CIRCUIT		
				AUX PWR	CONSTANT		
					AUX RESET		
					AUX DOOR		
					AUX SYNC[5]		
				B SWITCH	MANUAL PULL	Latch and Non-Latch feature only appear for WATERFLOW,FIRE SUPERVISORY, FIRE TAMPER, ZONE AUX1, ZONE AUX2, SYSTEM AUX1, SYSTEM AUX2., ECS INPUT, ECS TAMPER, and ECS SUPERVISORY.	
					WATER FLOW		
					FIRE SUPER-VISORY		
					FIRE TAMPER		
					FIRE DRILL		
					SILENCE		
					RESET		
					P.A.S. ACK		
					ZONE AUX 1		
					ZONE AUX2	Latch and Non-Latch feature only appear for WATERFLOW,FIRE SUPERVISORY, FIRE TAMPER, ZONE AUX1, ZONE AUX2, SYSTEM AUX1, and SYSTEM AUX2..	
					SYSTEM AUX1		
					SYSTEM AUX2		
					MANUAL RELEASE		
					INTERLOCK		
					STATUS POINT		
				A SWITCH	Same as B SWITCH		Section 8.5.2
				B DETECT	2-WIRE SMOKE		
					4-WIRE SMOKE		
					CO 4 WIRE DET		
				A DETECT	2-WIRE SMOKE		
					4-WIRE SMOKE		
					CO 4 WIRE DET		
		Select Group or Zone Number				Group or Zone selection will appear depending on the function selected	
		Edit Name		Enter Name			
	5880/5865	Enter Point #	UNUSED			Section 8.5.3	
			NOTIF	NOTIFICATION OUTPUT			
				CONTROL CIRCUIT			
Point (cont.)	5496	Edit Point #		UNUSED			Section 8.5.4
				B NOTIF	Control Circuit Notif Output	Select Group, Supervised Yes or No	
				A NOTIF			
				AUX_PWR	Constant	Edit Name	
					Aux Sync		
					Aux Door		
					Aux Reset		

Table 7.4 Programming Menus Quick Reference List (Continued)

Menu		Options/Defaults				Comments
System Options	Communication Options	Auto Time Test	Set the Hour	*02:00AM		See “Auto Test Time” on page 91.
			Set the Minutes			
			Select AM/PM			
			Enter Interval	24 hrs, 12 hrs, *6 hrs, 4 hrs		
		Phone Lines	For each phone line (1 & 2) select:			
			Dialing Prefix	Up to 9 digits	*none	See “Phone Lines” on page 91.
			# of Answer Rings	Range: 00-15	*06	
			Select Dialing Option	TT	*TT	
				TT/PL		
				PULSE		
			Rotary Pulse Format	U = 60/40	*U	
				E = 66/34		
			Dial Tone Disabled	Y or N	*N	
			Monitor Line	Y or N	*N	
			Answering Machine Bypass	Y or N	*N	
			Phone Line Unused	Y or N	*N	
		Edit Ethernet	IP Address			See “Edit Ethernet” on page 92.
			Subnet Mask			
			Default Gateway			
			DHCP Enable			

Table 7.4 Programming Menus Quick Reference List (Continued)

Menu		Options/Defaults				Comments
System Options cont.	Communication Options	AlarmNet Timers	Ethernet Supervise	75 sec, 90 Sec, 3 min, 5 min, 1 hr, 24 hrs, 30 days, None	*5 Minutes	See “AlarmNet Timers” on page 92.
			Cellular Supervise	24Hrs, 30 days, none	*24 Hours	
			Old Alarm Time	10 min, 15 min, 30 Minutes, 1 hr, 2 hrs, 4 hrs, 8 hrs, 12 hrs, 24hrs, none	*30 Minutes	
		Phone Line Gains	Dialing	High	*High	See “Phone Line Gains” on page 93.
				Low		
				Normal		
			Reporting	Low	*Low	
				Normal		
				High		
	Time Options	Water Flow Delay	0 - 90 Seconds	*1 sec		Section 8.6.2
		Alarm Verify	60 to 250 seconds	*60 sec		
		Low AC Report Time	0 - 30 hours	*3 hrs		
		AC Freq:	50 Hz	*60Hz		
			60 Hz			
			Internal			
		Clock Display Format	AM/PM	*AM/PM		
			MIL			
		Auto-resound	4 hours	*24 hours		
			24 hours			
	Miscellaneous Options	SYNC Strobes when Silenced	Y	*N		Section 8.6.3
			N			
		Auto Display Events	Y	*N		
			N			
	Daylight Saving Options	Auto Daylight Saving	Y	*Y		Section 8.6.4
			N			
		DST Start	Select week: 1st, 2nd, 3rd, 4th or Last	Select month		Section 8.6.4
		DST End				
	Edit Banner	Refer to Appendix A.				Section 8.6.5
	SLC Family	SK				Section 8.6.6
		SD				
JumpStart AutoPrg			Y (Yes)			Section 8.7
			N (No)			
Restore Defaults			Y (Yes) N (No)			Section 8.8
*=Default						

Table 7.4 Programming Menus Quick Reference List (Continued)

1 Available on internal SLC.
2 Available with SLC family as SK.
3 Available with SLC family as SD.
4 Requires wireless gateway.
5 AUX SYNC setting is only applicable for the B200S Intelligent Sounder Base.

Section 8: Programming

This section of the manual describes how to manually program the control panel from the built-in annunciator. Each subsection discusses these menu options in detail. All options described in this section can be performed using the HFSS Honeywell Fire Software Suite.

NOTE: JumpStart auto-programming should be run Before any customized programming is performed. Thoroughly test the system after running JumpStart because it automatically programs the system, searching for and configuring all SLC and SBUS devices it finds. JumpStart allows you to confirm the integrity of the installation prior to performing any custom programming. After determining that the hardware is properly installed, custom programming can be performed.

8.1 UL 864 Programming Requirements

NOTICE TO USERS, INSTALLERS, AUTHORITIES HAVING JURISDICTION, AND OTHER INVOLVED PARTIES:
This product incorporates field programmable software. In order for the product to comply with the requirements in the Standard for Control Units and Accessories for Fire Alarm Systems, UL 864, certain programming features or options must be limited to specific values or not used at all as indicated below.

Programming Option	Menu Item	Permitted in UL 864 (Y/N)	Possible Settings	Settings Permitted in UL 864
Time Options	Auto-resound	Yes	4 hrs, 24hrs	4 hours if using SWIFT devices 24 hours if using other devices
Time Options	Low AC Report Delay	Yes	0-30 hours	1-3 hours
Communication Options	Auto Test Time	Yes	4, 6, 12, and 24 hrs	4 or 6 hours
Silencing Options	Auto Silence	Yes	0-60 minutes	3-60 minutes
Display Oldest Event	Y (Enabled)	Yes	Yes or No	Yes
	N (Disabled)	No	Yes or No	No
Alarm Verification[1]	Alarm Verification	Yes	60-250 seconds (Confirmation period)	0-60 seconds
Manual Release Switch[2]	Manual Release	Yes	0-120 seconds (delay period)	0-30 seconds (delay period)

Table 8.1 Programming Requirements

1 When 2-count delay is active, you cannot use the alarm verification.
2 The Manual Release Switch shall override any pre-discharge delays resulting in an immediate release or start of the Manual Release Delay period. The delay period shall be 30 seconds or less from the activation of the switch to the actuation of the releasing device(s).

NOTE: Use software version 7.0 or higher.

8.2 Modules

This section lists the options available under the module option in the program menu. The following modules are available for the control panel: 6855, 5860 or 6860 LCD Annunciators, 5824 serial/parallel printer interface module, 5496 NAC Expander, 5895XL intelligent power module, 5880 LED I/O module, 5865 LED annunciator, and SK-NIC network interface card.

8.2.1 Edit Modules

The features that can be edited when this option is selected are, module name and class of wiring (Class A or Class B).

To edit an existing module, follow these steps:

1. Login to the panel.
2. Select 7 for Program Menu.

NOTE: If you are working on a networked system, you will need to select which panel you want to program.

3. Press 1 to enter the Module Menu.
4. Press 1 to edit a module.
5. To select the module you want to edit, use the up or down arrow key. Then, press ENTER.

Editing Module ID

6. Press the up or down arrow key to modify the module ID.

NOTE: You cannot edit the module ID for any internal devices, or the SK-NIC.

Naming Modules

You can assign an English name to a system hardware module to make it easier to recognize on a display.

7. If you want to edit the modules name, press the up or down arrow key to select each character for the modules name (or press the right arrow key to bypass the name edit).

NOTE: See Appendix A for instructions on how to edit names.

Default name for 5880 module (no customization)

```
5880-LED I/O
Module ID: 03
5880 03_________
<Module Name>
```

Use arrow keys to select characters. Letters begin displaying with “A”. Press the ENTER key to select the desired character. Use the right arrow to move to the next character.

```
5880-LED I/O
AB_____________
```

Figure 8.1 Edit Module Name Programming Screen Example

Changing Module Options

Each module has a unique set of options that specifically applies to the functionality of the module being edited.

8. Use the left and right arrow keys to move the cursor between the available options.
9. To edit the Option settings, press the up or down arrow key or use the keypad to enter a number.

8.2.2 Adding a Module

If you need to add a new hardware module to the system, follow these steps.

1. Login to the panel.
2. Select 7 for Program Menu.
3. Press 1 to enter Module Menu.
4. Press 2 to add a module.
5. From the next screen, use the up or down arrow to choose a module type to add from the <New Module Type> screen.

   The screen will display “Adding module [#]...” for a few moments. You will be returned to the <New Module Type> screen where you can add additional modules if desired.

You must save changes when you exit the Program Menu or the new module will not be added.

NOTE: If you add a module that has not been physically connected, the panel will go into trouble after it reinitializes (when you exit the Program Menu). When the new module is attached, the trouble will correct itself automatically.

8.2.3 Deleting a Module

If you ever need to delete a module, follow these steps.

1. Login to the panel.
2. Select 7 for Program Menu.
3. Press 1 to enter Module Menu.
4. Select the desired module.
5. Press 3 to delete a module.
6. Select a module to delete.
7. A Warning screen will display. If you want to proceed with deleting the module, select Yes. To cancel, select No.

8.2.4 View Module List

1. Login to the panel.
2. Select 7 for Program Menu.
3. Press 1 to enter Module Menu.
4. Press 4 to View Module List.

8.3 Zone

Through the Zone option in the Program Menu, you can edit and view zone points. Selections made here affect all detectors and switches in the zone. Up to 250 zones can be used in the system.

8.3.1 Edit Zone

Features that can be edited through the Edit Zone option are zone name, zone properties (which includes, zone type, and detector sensitivity), zone output mapping, and zone accessory options.

To edit a zone, follow these steps:

1. Login to the panel.
2. Select 7 for Program Menu.
3. Press 2 to enter Zone Menu.
4. Press 1 to edit a zone.
5. Enter the zone number, then press ENTER.

Edit Zone Name

6. Press 1 to edit the selected Zone Name.

You can use words to display a descriptive name for a zone.

NOTE: See Appendix A for editing names.

Edit Zone Properties

Zone properties consist of alarm delay characteristics, and heat detector sensitivity.

1. Do steps 1 through 5 of Section 8.3.1.
2. Press 2 to edit the properties of the selected zone.

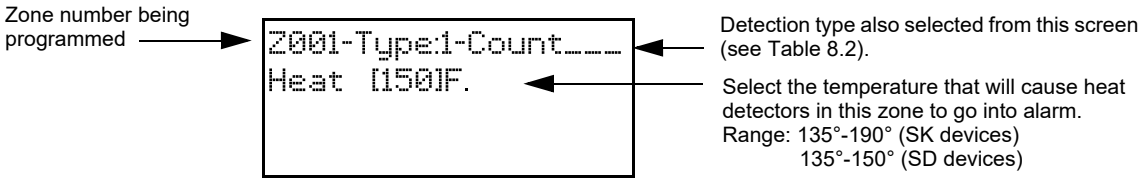

Figure 8.2 Edit Zone Properties

■ Alarm Delay Characteristics

The programmed zone type is provided for the user reference only. To modify the zone type, use the HFSS Honeywell Fire Software Suite.

Select the alarm delay characteristics (see Table 8.2 below) by pressing the up or down arrow.

Type of Delay	Description
1-Count[1]	One Count (No Delay). When this option is enabled, an alarm occurs immediately when a single device of any of the following types goes into alarm: detector, manual pull, water flow, Aux1 or Aux2. This is considered the most typical operation and is the default for all zones.
2-Count	When this type of alarm delay is used, two or more detectors within the zone must go into alarm in order for the zone to report an alarm. Switches of type manual pull, water flow, Detector Switch, Aux1 and Aux2 are an exception; they will cause an alarm when only one switch is in alarm. When a single detector is in alarm in a 2-Count zone, the system enters a pre-alarm condition. In a pre-alarm condition, the touchpad PZT beeps and the annunciator display indicates that a pre-alarm has occurred. If the zone has been mapped to an output group for the pre-alarm event, the output group will activate. The pre-alarm will not be reported to the central station.
Alarm Verification	Alarm verification is an optional false alarm prevention feature that verifies an alarm condition by resetting the smoke detector. If the alarm condition still exists by the time the reset cycle has completed, the detector will go into alarm. If the detector is no longer in alarm, no report will go to the central station. The alarm verification sequence is ignored if the zone is already in alarm.
PAS-Positive Alarm Sequence[2]	This option is intended to be used with an acknowledge switch. An alarm is delayed for 15 seconds, giving on-site personnel a chance to investigate the alarm. If the acknowledge switch is not activated within 15 seconds, an alarm occurs automatically. If this option is enabled for a zone, the zone will respond to an alarm condition as follows: ✓ The zone will not go into alarm for 15 seconds to allow an on-site operator to activate the acknowledge switch. ✓ If the operator does not press the acknowledge switch within 15 seconds, the zone will go into alarm. ✓ If the operator presses the acknowledge switch within 15 seconds, a 180-second time-frame will begin counting down. This time-frame allows the operator to investigate the cause of the alarm. ✓ If the operator performs a reset within 180 seconds, the alarm will not occur. ✓ If the operator does not perform a reset within 180 seconds, an alarm will occur automatically. ✓ The PAS feature will be overridden if another alarm occurs.

Table 8.2 Alarm Delay Types

Type of Delay	Description
Alternate P.A.S. - Positive Alarm Sequence[2]	An improved version of PAS is available with software version 6.04 or higher, for use with the 6860 and 6855 only. Existing systems with PAS enabled will still function normally. The PAS option will program an automatic, addressable detector to delay panel activation (including alarm relay and communicator) for a period of 15 seconds plus a delay time of up to three minutes. When a detector triggers an alarm, the onboard piezo sounds immediately, but the mapped output groups (e.g. NACs, control/relay modules) are prevented from activating for 15 seconds. This inhibit time is factory set and cannot be changed. Pressing the ACK key during the 15 second inhibit time will start a timer which prevents activation of the mapped output groups for an additional time duration for up to three minutes and display a countdown for the three minute delay. After the delay, the mapped output groups will activate if the source of the alarm is not cleared. If a second alarm occurs during either time delay, the alarm will be processed immediately, causing activation of the appropriate output groups. If PAS is enabled, ✓ the onboard piezo sounds immediately. ✓ the control panel LCD display will indicate a PAS-alarm event and the active point. ✓ output groups (NACs and control/relay modules) of associated zones will be inhibited from activating for a factory-set duration of 15 seconds. ✓ pressing the ACK key will start a timer which inhibits output activation for additional time delay of up to three minutes. ✓ a second alarm occurring at any time during either time delay will cause immediate activation of all associated outputs.
SNGL ILOCK	See Section 9.5.1 for single interlock releasing operation.
DBL ILOCK	See Section 9.5.2 for double interlock releasing operation.

Table 8.2 Alarm Delay Types (Continued)

1 SK-FIRE-CO and other CO detectors can only be installed in a 1 count zone. They will operate as a 1- count point regardless of the programmed zone type (i.e. Alarm Verification, 2 count, etc.).
2 PAS operation requires the approval of the local Authority Having Jurisdiction. Alarm Verification, two-count, single interlock releasing, and double interlock releasing cannot be used while PAS is enabled.

■ Heat Detector Sensitivity

Use this feature to set the temperature at which high temperature detectors will respond. All detectors in the zone will respond in the same way. The range for the SD505-HEAT heat detector is from 135°F to 150°F. The range for SK-HEAT-HT heat detectors is from 135°F to 190°F.

The high temperature SK heat detectors are absolute temperature devices. This means that they respond to an alarm immediately if the temperature in the zone goes above the programmed temperature.

3. Enter the temperature at which the heat detector will respond, or use the up or down arrow to scroll through the range or enter directly from the number keys on the annunciator, then press ENTER.

Zone Accessory Options

1. Login to the panel.
2. Select 7 for Program Menu.
3. Press 2 to enter Zone Menu.
4. Press 1 to edit a zone.
5. Enter the zone number, then press ENTER.
6. Press 3 to edit the Zone's Accessory options.

Single or Multi-Station cadence pattern (choose from Patterns 00 to 02, 23 if using SK. Choose from 00-16, 23 if using SD devices). See Appendix C.

CO Single and Multi-Station Cadence (choose from Cadence Patterns 00 to 02, 23 for SK devices).

NOTE: The B200S Intelligent Sounder base provides the recommended CO cadence pattern.

Local Zone (choose Y or N, for Yes or No).

NOTE: If the SLC protocol is changed from SD to IDP/SK series and the cadence is no longer valid for IDP/SK, the zone cadence will be set to constant on.

8.3.2 View Zone Points

To view the points in a zone, follow these steps:

1. Login to the panel. The panel will automatically access the Main Menu.
2. Select 7 for Panel Programming.
3. Press 2 to enter the Zone Menu.
4. Press 2 to View Zone Points.
5. Enter the number of the zone you want to view, then press ENTER.

8.4 Group

An output group is made up of output points that have been programmed to respond in the same way. Output groups simplify programming because you only have to program the output characteristics that are common to all of the group points once, instead of programming each individual point. Once you have defined the characteristics of output groups, you can assign each point to the appropriate group. All valid output points are assigned to only one output group. Unused points are not assigned to any output group. Up to 250 output groups can be defined per panel.

8.4.1 Edit Group

In the Edit Group option, you can program the name of an output group and change the properties of that group.

To edit a group, follow these steps:

1. Login to the panel. The panel will automatically access the Main Menu.
2. Select 7 for Panel Programming.
3. Press 3 to enter Group Menu.
4. Press 1 to edit the Group.
5. Enter the number of the group you want to edit, then press ENTER.

Edit Group Name

6. To edit the Group Name, press 1.

You can use words to display a descriptive name for a group.

NOTE: See Appendix A for editing names.

Edit Group Properties

7. To edit the Group Properties, Press 2 from the Edit Group Menu.

- Template Override: Y or N
- When Template override is Yes, Template Override Cadence is available.
- See Section 8.4.3 for more information.

```
Group 001 Properties
Voice Group: N
Select Switch:00
            More►
```

```
Allow Sys Override: N
Template Override: Y
Template Override
Cadence: 23
```

Figure 8.3 Group Properties Screen Programming Options

8.4.2 View Group Points

1. Login to the panel. The panel will automatically access the Main Menu.
2. Select 7 for Panel Programming.
3. Press 3 to enter Group Menu.
4. Press 2 to view the Group Points.
5. Enter the group number, then press ENTER.

8.4.3 Edit OPG (Output Group) Template

1. Login to the panel. The panel will automatically access the Main Menu.
2. Select 7 for Panel Programming.
3. Press 3 to enter Group Menu.
4. Press 3 to edit OPG Template.
5. Enter the Template number, then press ENTER
6. Press ENTER on the template name to edit the name.

You can use words to display a descriptive name for a group.

NOTE: See Appendix A for editing names.

7. To select which output groups to include in the template, press the right arrow key to access the OPG and select YES or NO.

8.5 Point

You may need to change the characteristics of the individual input points (detectors and switches) even after using JumpStart. This section explains how to change the options for: type of input point; latching/non-latching status (switches); and name and zone/group assignment of a point. The table below is for a quick reference to point programming options. The following sections explain these options in more detail.

Choices	Type Selections	Function Selections for each Type	Comments
5880 (output)	UNUSED		
	NOTIF (outputs pt 1-40)	NOTIF OUTPUT	
		CONTROL CIRCUIT	
5880 (input 41-48)	SWITCH	MANUAL PULL	Latch or Non-latching feature only appears for WATERFLOW, FIRE SUPERVISORY, FIRE TAMPER, ZONE AUX1, ZONE AUX2, SYSTEM AUX1, and SYSTEM AUX2.
		WATERFLOW	
		FIRE SUPERVISORY	
		FIRE TAMPER	
		FIRE DRILL	
		SILENCE	
		RESET	
		P.A.S. ACK	
		ZONE AUX1	
		ZONE AUX2	
		SYSTEM AUX1	
		SYSTEM AUX2	
		MANUAL RELEASE	
		INTERLOCK	
		STATUS POINT	
5496	UNUSED		
	B NOTIF	NOTIF OUTPUT	supervised not supervised
		CONTROL CIRCUIT	
	A NOTIF	NOTIF OUTPUT	
		CONTROL CIRCUIT	
	AUX_PWR	CONSTANT	
		AUX RESET	
		AUX DOOR	
		AUX SYNC	Cannot be supervised
5865	UNUSED		
	NOTIF	NOTIF OUTPUT	
		CONTROL CIRCUIT	

Table 8.3 Point Programming Options

8.5.1 Point Programming for an SLC Module

To program for points on an SLC module, follow these steps:

1. Login to the panel. The panel will automatically access the Main Menu.
2. Select 7 for Panel Programming.
3. Press 4 to enter the Point Menu.
4. Press the up or down arrow key to select the desired module. Refer to Section 7.5 for available choices. Then, press ENTER.
5. Select S for sensor or M for module. (SK devices only)
6. Enter the number of the point you want to edit, then press ENTER.
7. Select the type of device by pressing the up or down arrow key. Refer to the column heading, "Type Selection" in the table below for a list of choices.

Type Selection	Function	Latching Option	Comments
UNUSED			
SD DETECTOR	PHOTO		
	ION		
	HEAT		
	PHOT DUCT		
	2WIRE SMK		
SD SUP DET	SUP PHOTO	Latching Non Latching	
	SUP ION		
	SUP HEAT		
SK DETECTOR	PHOTO		
	PHOTO-HEAT		
	ION		
	HEAT		
	PHOT DUCT		
	2WIRE SMK		
	ACCLIMATE		
	HEAT HT		
	BEAM		
SK SUP DETECTOR	SUP PHOTO DUCT	Latching Non Latching	Supervisory switches can be latching or non-latching.
	SUP SMOKE PHOTO		
	SUP SMOKE ION		
	SUP HEAT		
	SUP ACCLIMATE		
	SUP HEAT HT		
	SUP SMOKE PHOTO/HEAT		
	SUP SMOKE BEAM		
CO SMOKE DETECTOR	ALRM CO/ALRM FIRE		
	SUP CO/ALRM FIRE		
	ALRM CO/SUP FIRE		
	SUP CO/SUP FIRE	Latching Non Latching	Detectors programmed as Supervisory can be latching or non-latching.
W-DETECTOR	PHOTO	Latching Non Latching	Wireless photoelectric detectors
	HEAT		Wireless heat detector
	PHOTO-HEAT		
W-SUP DET	Same as W-Detector	Latching Non Latching	Wireless photoelectric detectors

Table 8.4 Point Programming for Internal SLC Module

Type Selection	Function	Latching Option	Comments
SWITCH	MAN_PULL		Use this switch type for manual pull stations. This input is always latched. The switch can clear only when an alarm is reset.
	WATERFLOW	Latching Non Latching	Use this switch type for monitoring water flow in a Sprinkler System. Switch closure will cause a sprinkler alarm. Water flow switches can be programmed as latching or non-latching. You can program a delay of up to 90 seconds to be used with a water flow switch. The delay allows for normal, brief changes in Sprinkler System water pressure. The water flow alarm will not activate unless the switch is active for the programmed delay time. Note: Waterflow delay of the FACP and the waterflow device shall not exceed 90 seconds. If a delay is used, the system begins counting down when the switch closes. If the switch opens (restores) before the timer expires, a water flow alarm is not generated. If the water flow switch remains closed after the timer expires, a water flow alarm will be generated.
	SUPERVSY	Latching Non Latching	Use this switch type for tamper monitoring of sprinklers and other fire protection devices. If a contact closes, a sprinkler supervisory event will be generated. Supervisory switches can be latching or non-latching.
	FIRE DRILL		System-level, non latching switch. This switch is an alternative way of causing a fire drill. It has the same operation as the fire drill option available from the annunciator. When the switch is activated, a fire drill begins; when the switch is de-activated, a fire drill ends.
	SILENCE		System-level switch provides an alternate way to silence the system; same effect as pressing the Silence key.
	RESET		System-level switch provides an alternate way to reset the system; same effect as pressing the Reset key.
	PAS_ACK		Positive acknowledge switch. This switch must be used in zones programmed as Positive Alarm Sequence (see Table 8.2). If an acknowledge switch closes when an alarm or trouble condition is not already in progress, a trouble will occur. You must use a UL listed normally open, momentary switch type. The switch must be rated at 5V, 100 mA (minimum) and be used with an EOL resistor for supervision.
	ZN_AUX1	Latching	Use these switch types if you want to monitor special zone-level conditions.
		Non Latching	
	ZN_AUX2	Latching	
		Non Latching	
	SYS_AUX1	Latching	Use these switch types if you want to monitor special system-wide conditions.
		Non Latching	
	SYS_AUX2	Latching	
		Non Latching	
	DETECT SW		Used to monitor conventional 4-wire detectors, a contact closure will generate a detector alarm event.
	TAMPER	Latching	Performs identically to a supervisory switch, but will be indicated as a tamper switch on the LCD annunciator.
		Non Latching	
	MAN REL		Manual release switch, typically a pull station.
	ILOCK		Interlock release switch input.
	CO DETECT SW		CO Detector Switch
	CO SUPERVISORY DETECT SW		CO Supervisory Detector Switch
	STATUS PT		Status Point Switch
	TROUBLE_MON		Use this switch type to monitor trouble from external devices. Trouble monitors are used in HVAC operations.

Table 8.4 Point Programming for Internal SLC Module (Continued)

Type Selection	Function	Latching Option	Comments
NOTIF	OUTPUT PT	Select Group	Output Point, a general use notification type. Use for driving standard notification appliances.
	AUX CONST		Use constant power for applications that require a constant auxiliary power source. Power is always present at Constant circuits. See “Constant Power” on page 45 to learn how this option operates.
	AUX RESET		Use for auxiliary power, resettable applications. See “Resettable Power” on page 45 to learn how this option operates.
	AUX DOOR		Use for auxiliary power, door holder applications. For example, if you were using an auxiliary power supply for door holders, you would use this option. See “Door Holder Power” on page 45 to learn how this option operates.
RELAY	OUTPUT PT	Select Group	Output Point, a general use relay type. Use for applications requiring a relay, such as elevator recall.
	AUX RESET		Use for auxiliary power, resettable applications. See “Resettable Power” on page 45 to learn how this option operates.
	AUX DOOR		Use for auxiliary power, door holder applications. For example, if you were using an auxiliary power supply for door holders, you would use this option. See “Door Holder Power” on page 45 for a description of how this option operates.
W-Gateway			Wireless Gateway
W-SWITCH	Same as SWITCH		
W-Relay	Same as Relay		

Table 8.4 Point Programming for Internal SLC Module (Continued)

8.5.2 Point Programming For Internal or External Power Module (5895XL)

To program for an internal or external power module points:

1. Login to the panel. The panel will automatically access the Main Menu.
2. Select 7 for Panel Programming.
3. Press 4 to enter Point Menu.
4. Press the up or down arrow key to select the desired module. Refer to Section 7.5 for available choices, then press ENTER.
5. Enter the number of the circuit or the point you want to edit, then press ENTER.
6. Select the type by pressing the up or down arrow key, then press ENTER.
7. Select the function by pressing the up or down arrow key, then press ENTER.
8. If the point supports latching, press the up or down arrow key to select latching or non-latching, then press ENTER.
9. Select the zone or group by pressing the up or down arrow key, then press ENTER.
10. If the point supports not supervised, press the up or down arrow key to select supervised or non-supervised, then press ENTER.
11. Press ENTER to edit the Point Name. See Appendix A for help with editing text. Or, Press the right arrow key to skip the Point Name edit.
12. Repeat Steps 1 through 11 for all circuits.

Choices	Type Selections	Function Selections for each Type	Comments
Enter Point			
Select Type	UNUSED		
	B NOTIF	NOTIF OUTPUT	User also has Supervised/Unsupervised option
		CONTROL CIRCUIT	
	A NOTIF	Same as B NOTIF	
	AUX_PWR	CONSTANT	Constant auxiliary power.
		AUX RESET	Resettable auxiliary power.
		AUX DOOR	Door holder auxiliary power.
		AUX SYNC	Power Sync
	B SWITCH[1]	MANUAL PULL	Latch or Non-latching feature only appears for WATERFLOW, FIRE SUPERVISORY, FIRE TAMPER, ZONE AUX1, ZONE AUX2, SYSTEM AUX1, SYSTEM AUX2, ECS INPUT, ECS TAMPER, and ECS SUPERVISORY.
		WATERFLOW	
		SUPERVISORY	
		TAMPER	
		FIRE DRILL	
		SILENCE	
		RESET	
		P.A.S. ACK	
		ZONE AUX1	
		ZONE AUX2	
		SYSTEM AUX1	
		SYSTEM AUX2	
		MANUAL RELEASE	
		INTERLOCK	
		STATUS POINT	
	A SWITCH[1]	Same as B SWITCH	
	B DETECT[1]	2-WIRE SMOKE	Used for Class B, 2-wire detectors.
		4-WIRE SMOKE	Used for Class B, 4-wire detectors.
		CO 4-WIRE DET	Used for Class B, 4-wire CO detectors.
		CO 4-WIRE SUP DET	Latching or Non-latching used for Class B, 4-wire CO Supervisory detectors
	A DETECT[1]	2-WIRE SMOKE	Used for Class A, 2-wire detectors.
		4-WIRE SMOKE	Used for Class A, 4-wire detectors.
		CO 4-WIRE DET	Used for Class A, 4-wire CO detectors.
Select Zone/Group			Group or Zone selection will appear depending on the type selected.
Edit Name			See Appendix A.

Table 8.5 Menu Choices for Internal/External Power Module

1 Only applicable to 5895XL

8.5.3 Point Programming for 5880 or 5865 Modules

To program 5880 or 5865 module output points:

1. Login to the panel.
2. Select 7 for Program Menu.
3. Press 4 to enter the Point Menu.
4. Press the arrows to select the desired module. Refer to Section 7.5 for available choices. Then press ENTER.
5. Enter the point number, then press ENTER.
6. Press the up or down arrow key to select the type (notification or unused). Then, press ENTER.
7. Press the up or down arrow key to select the desired group. Then, press ENTER.
8. Press ENTER to edit the Point Name. See Appendix A for help with editing text. Or, Press the right arrow key to skip the Point Name Edit.
9. Repeat Steps 1 through 8 for all output points.

Figure 8.4 Programming Output Points Screen for 5880 and 5865 Modules

To program 5880 or 5865 module input points:

10. To use the 5880 as an input point, Enter point number 41 - 48. Then press ENTER.
11. Press the up or down arrow key to select type (switch or unused), and press ENTER.
12. Press the up or down arrow key to select the desired function and press ENTER.
13. If the point supports latching press the up or down arrow key to select latching or non-latching, and press ENTER.
14. Press the up or down arrow key to select the desired group/zone, and press ENTER.
15. Edit the point name or press the right arrow key to skip the Module Name Edit.
16. Repeat steps 10 through 15 for all input points.

Figure 8.5 Programming Input Points Screen for 5880 and 5865 Modules

8.5.4 Point Programming for the 5496

To program the module points:

1. Login to the panel. The panel will automatically access the Main Menu.
2. Select 7 for Panel Programming.
3. Press 4 to enter point menu.
4. Press the up or down arrow key to select the desired module. Refer to Section 7.5 for available choices, then press ENTER.

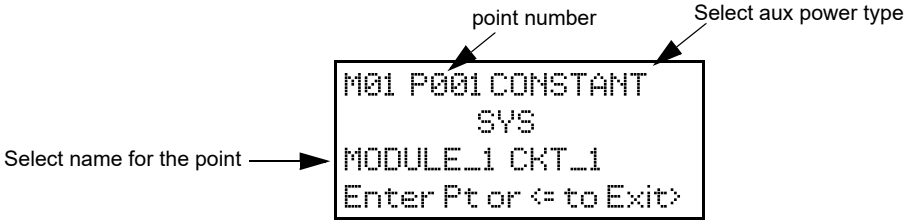

Figure 8.6 Programming Points Screen for the 5496 Module

5. Enter the point number, then press ENTER.
6. Press the up or down arrow key to select the type and press ENTER.
7. Press ENTER to edit the Point Name. See Appendix A or press the right arrow key to skip the Point Name Edit.
8. Repeat Steps 1 through 7 for all points.

8.6 System Options

This section of the manual explains how to customize software options that affect general operation of the system. This includes such items as: Communication Options, Daytime/Nighttime Sensitivity, Holiday Days, Time Options, Miscellaneous Options, Daylight Saving Options, Edit Banner, and SLC Family. Refer to each individual subsection for complete instructions.

8.6.1 Communication Options

Auto Test Time

To access the automatic communicator test time screen:

1. Login to the panel.
2. Select 7 for the Program Menu.
3. From the Program Menu, select 5 for System Options.
4. Press 1 for Communication Options.
5. Select 1 for Auto Test Time.
6. Enter the hour you desire the control panel to send an automatic test report (or press the up or down arrow), then press ENTER.
7. Enter the minutes (or press the up or down arrow), then press ENTER.
8. Select AM or PM by pressing the up or down arrow, then press ENTER.
9. Select the Report Time Interval by pressing the up or down arrow, then press ENER. Time Interval selections are 24hrs, 12hrs, 6hrs, and 4 hrs.

NOTE: AM and PM are only available if the panel "Clock Options" are set for AMPM mode. Otherwise, the clock is in military time and AMPM is not selectable.

Phone Lines

To access the phone lines screen:

1. Login to the panel.
2. Select 7 for Program Menu.
3. From the Program Menu, select 5 for System Options.
4. Select 1 for Communication Opts.
5. Select 2 for the Phone Lines Menu.
6. Select the phone line to be edited (1 or 2) by pressing the up or down arrow, then press ENTER.

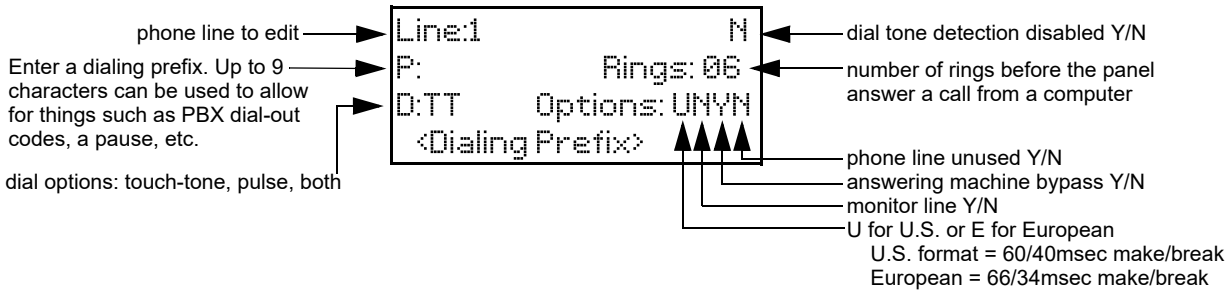

Figure 8.7 Phone Lines Editing Screen

■ Dialing Prefix

Enter up to nine characters to be used for such things as PBX dial-out codes, a pause, etc. The following special characters are available:

#	Pound (or number) key on the telephone
*	Star key on the telephone
,	Comma (character for 2-second pause)

Use the number buttons on the annunciator or the up- and down-arrow keys to select special characters. Characters begin displaying after "9".

7. Enter a dialing prefix (if needed), then press ENTER. Or, press the right arrow to bypass the dialing prefix option.

■ Number of Answer Rings

This option is used in conjunction with the HFSS Honeywell Fire Software Suite. Use this option to determine the number of rings before the panel answers a call from the computer. The range is 00-15 rings. This option is factory-programmed as 06 rings, which should be compatible for most installations where the answering machine bypass feature is used. You may need to adjust it depending on the installation's telephone system.

The selection made here must match the programming for this option in the Communication Configuration dialog box of HFSS.

8. Enter the desired number of answer rings, then press ENTER.

■ Dial Option

9. Press the up or down arrow to select the dial option, then press ENTER.

Dial Option	Description
PULSE	If this option is selected, only pulse dialing will be used for this phone line.
TT	Touch-tone dialing. If this option is selected, only touch-tone dialing will be used for this phone line.
TT/PL	Touch-tone alternating with pulse. If this option is selected, the communicator will first attempt to use touch-tone. It will switch to pulse if touch-tone is not successful on the first attempt. It will continue to alternate between TT and pulse for additional attempts.

Table 8.6 Dial Options

■ Dial Format

10. Press the up or down arrow to select the pulse ratio for rotary dialing option, then press ENTER.
    Options are as follows:

U	U.S. standard format. Uses the 60 msec / 40 msec make/break ratio.
E	European format. Uses the 66 msec / 34 msec make/break ratio.

■ Dial Tone Detection Disabled

11. Select Y (do disable) or N (don't disable) by pressing the up or down arrow key, then press ENTER.

■ Line Monitor

Enable the line monitor for each phone line that will be used. See Figure 8.7 for location of this field on the phone lines screen. When the phone line monitor has been enabled for a phone line, a trouble condition will occur if the line is not connected. If a phone line will not be used, it must be disabled.

12. Select Y (monitor line) or N (don't monitor line) by pressing the up or down arrow, then press ENTER.

■ Answering Machine Bypass

This option is used in conjunction with the HFSS Honeywell Fire Software Suite. This feature ensures that an answering machine will not interfere with communication between the panel and the computer. If an answering machine is used at the panel site, enable this feature; if an answering machine is not used, disable the feature.

This option is factory-programmed as Yes (enabled).

The selection made here must match the programming for this option in the Communication Configuration dialog box of the HFSS.

13. Select Y (answering machine bypass enabled) or N (answering machine bypass disabled) by pressing the up or down arrow, then press ENTER.

■ Phone Line Unused

This option is used so that you can set unused phones lines to "Yes", so no auto-test will be sent through that line.

This option is factory programmed as No.

14. Select Y or N by pressing the up or down arrow key, then press ENTER.

Edit Ethernet

1. Login to the panel. The panel will automatically access the Main Menu.
2. Select 7 for Panel Programming.
3. Select 5 for System Options.
4. From the next Menu, select 1 for Communication Opts.
5. Select 3 for Edit Ethernet.

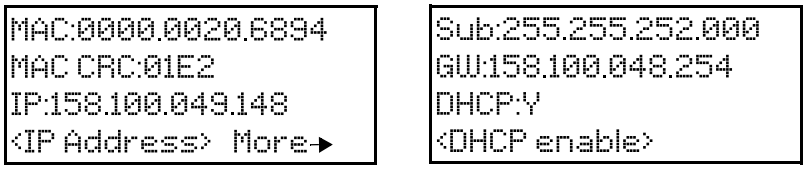

Figure 8.8 Edit Ethernet Message

AlarmNet Timers

1. Login to the panel. The panel will automatically access the Main Menu.
2. Select 7 for Panel Programming.
3. Select 5 for System Options.
4. From the next menu, select 1 for Communication Options.
5. Select 4 for AlarmNet Timers.
6. The available options for AlarmNet Timers are as follows: (*default)

- Ethernet: None, 75 seconds, 90 seconds, 3 minutes, *5 minutes, 1 hour, 24 hours, 30 days.
- Cellular: None, *24 hours, 30 days.
- Old Alarm: None, 10 minutes, 15 Minutes,*30 Minutes, 1 Hour, 2 Hours, 4 Hours, 6 Hours, 12 Hours, 24 Hours.

  (Sets how long an undeliverable alarm is retried for delivery to the Central Station. If the message is not validated, it is retried until the old alarm time is reached or the message is validated).

```
Ethernet: 5 Minutes_
  Cellular: 24 Hours_
Old Alarm: 30 Minutes_
<Ethernet Supervise>
```

Figure 8.9 AlarmNet Timers

Phone Line Gains

1. Login as the Installer using the Installer Code.
2. Select 7 for Panel Programming.
3. Select 5 for System Options.
4. From the next menu, select 1 for Communication Options.
5. Select 5 for phone line Gains
6. The available options: (*default)

- Dialing Gain:
  - Low = 9 DB Attenuation
  - Normal = 6 DB Attenuation
  - *High = 3 DB Attenuation
- Reporting Gain:
  - *Low = 9 DB Attenuation
  - Normal = 6 DB Attenuation
  - High = 3 DB Attenuation

8.6.2 Time Options

Through this programming option, you can set the water flow delay time, alarm verification time, AC report delay, AC-Frequency, Auto-Resound, and Clock Format.

Water Flow Delay

You can program a delay of 0-90 seconds (zero means no delay) to be used in conjunction with a water flow switch. The delay is system-wide. All water flow switches on the system will use the same delay period.

To access the screen for programming water flow delay, follow these steps:

1. Login to the panel.
2. Select 7 for Program Menu.
3. Select 5 for System Options.
4. Select 4 for Time Options.

A screen similar to the one shown below will display.

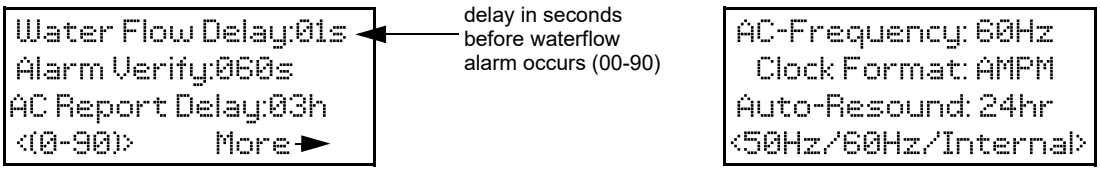

Figure 8.10 Water Flow Delay Programming Screen

5. Enter the number of seconds (0 to 90) to delay a water flow switch alarm, then press ENTER.

Alarm Verify

You can set the alarm verification time from 60 to 250 seconds (default is 60 seconds).

To set the alarm verification, do the following.

6. Enter the desired number of seconds for the alarm verification time.
7. Press the right arrow key or ENTER to make your selection and move the cursor to the next programming option.

AC Report Delay

NOTE: You must select 1-3 hours for AC Delay Time in UL Central Station and UL Remote Signaling installations.

You can adjust the number of hours before a Low AC Report will be sent to the Central Station.

8. Enter the number of hours (0-30) before a low AC Report will be sent to the Central Station, then press ENTER.

Change AC Line Frequency

The panel's AC line frequency is selectable for 50, 60 Hz, or Internal. The AC Frequency feature dictates how the control panel will calculate time based on the AC line frequency used in the installation site. The "Internal" option can be used in areas where the AC line frequency is not dependable and you want the panel to calculate time from the internal crystal. The internal crystal is not as accurate as the AC power source and either 60 Hz or 50 Hz should normally be selected. The panel defaults to the 60 Hz selection.

To change the AC line frequency, continue programming from step 9 above:

9. Select 50, 60 or Internal, by pressing the up or down arrow, then press ENTER.

Clock Display Format (AM/PM or Military)

To change the system clock display format, continue programming from step 8 above:

10. Select AMPM (for AM/Pm display format) or MIL (for military or 24 hr display format) by pressing the up or down arrow, then press ENTER.

Auto-Resound (4 or 24 hours)

The system resound time period can be modified from the default value 24 hours to 4 hours. This setting adjusts when the FACP will automatically resound events after being silenced. Set this option to 4 hours when using SWIFT devices.

8.6.3 Miscellaneous Options

Through this programming option, you can turn on or off the strobe synchronization during silence, and display status at Idle (auto display event).

To edit the Miscellaneous Options, do the following.

1. Login to the panel.
2. Select 7 for Program Menu.
3. Select 5 for System Options.
4. Select 5 for Miscellaneous Options.

Sync Strobes Active when Audible Silenced

When "SYNC Strobe" is selected as Y (Yes), the strobes will continue to flash when the system is silenced and will stop flashing when the system is reset.

NOTE: The "SYNC Strobe" feature only functions with outputs that use a synchronized output pattern.

5. Press the up or down arrow key to toggle this selection between Y (Yes) or N (No).
6. Press right arrow key or ENTER to make your selection and move to the next programming option.

Auto Display Events

When this feature is programmed Y (Yes), the highest priority event of the system in control will automatically display on the control panel and remote annunciators after there has been no activity on any system touch pad for two minutes.

7. Press the up or down arrow key to toggle this selection between Y (Yes) or N (No).
8. Press right arrow key or ENTER to make your selection and move to the next programming option.

8.6.4 Daylight Savings Options

To edit Daylight Savings Time:

1. Login to the panel.
2. Select 7 for Program Menu.
3. Select 5 for System Options.
4. Select 6 for Daylight Savings.

Automatic Daylight Saving Time Adjustment

The control panel has an automatic DST (Daylight Saving Time) adjustment feature. If this feature is not enabled (set to *No*), the Daylight Saving Time change is not made to the system clock.

To enable or disable DST adjustment continue programming:

5. Select Y (enabled) or N (disabled) by pressing the up or down arrow, then press ENTER.

Daylight Saving Time Start and End

This option lets you to adjust the week and month Daylight Saving Time (DST) starts and ends. For this feature to work, you must enable (set to *Yes*) the Automatic Daylight Savings Adjustment option under Daylight Savings Options. The default values for the DST Start and End are:

- DST Start: The second Sunday in March
- DST End: The first Sunday in November

To set the start and end for Daylight Saving Time:

6. Press the up or down arrow to select the week (1st, 2nd, etc.) Daylight Saving Time starts, then press ENTER to make your selection and move to the month setting.
7. Press the up or down arrow to select the month (January – December) Daylight Saving Time starts, then press ENTER to make your selection and move to the DST End option.
8. Press the up or down arrow to select the week (1st, 2nd, etc.) Daylight Saving Time ends, then press ENTER to make your selection and move to the month setting.
9. Press the up or down arrow to select the month (January – December) Daylight Saving Time ends, then press ENTER two times to make your selection and exit.

8.6.5 Edit Banner

The banner is the message that displays on the panel LCD when the system is normal, that is, when no alarms or troubles exist and no one is currently using system menus. You can create a customized message, which can be up to 40 characters, two lines of 20 characters each.

If you do not create a customized message, the system will use the internal banner. You cannot change the internal banner.

To customize the banner display message:

1. Login to the panel.
2. Select 7 for Program Menu.
3. Select 5 for System Options.
4. Select 7 for Edit Banner.

NOTE: See Appendix A for instructions on how to edit banner.

5. Select each character of a word by pressing the up or down arrow, then press the right arrow to move to the next character.
6. When word or sentence is complete press ENTER to save the custom banner.

8.6.6 SLC Family

The 6808 supports SD, Intelligent Device Protocol (IDP) or SK Series SLC devices. You must configure the 6808 to accept the protocol of the devices you are installing. You cannot mix SLC devices of different protocols.

1. Login to the panel.
2. Select 7 to access the program menu.
3. Select 5 to access System Options.
4. Select 8 for SLC Family.
5. Press UP arrow to select the desired SLC device type.
6. Press ENTER to accept the displayed SLC device type.

NOTE: When you change the SLC type from one protocol to another, the following message will appear.

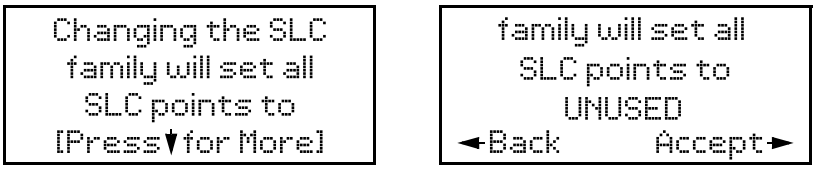

Figure 8.11 SLC Family Change

8.7 JumpStart Auto-Programming

NOTE: JumpStart Auto-Programming is used to auto learn the system hardware after devices have been added or removed from the system. Hardware devices which remain the same between repeat JumpStart will retain any customized text or options associated with the device. It is best to carefully consider the Network ID setting for each panel before the first JumpStart Auto-Programming is performed. Once this is done, the panel must be defaulted back to factory defaults if the network ID settings need to change.

To run JumpStart Auto-Programming, do the following steps.

1. Login to the panel.
2. Select 7 for Program Menu.
3. Select 6 for JumpStart.
4. Press ENTER to accept the Warning screen.
5. Follow the remaining on screen instructions
6. Press ENTER to confirm. See Section 7.1.3.

8.8 Restore Defaults

This option allows you to restore the panel back to factory defaults. All programming will be lost.

1. Login to the panel. The panel will automatically access the Main Menu.

2. Select 7 for Panel Programming.
3. Select 7 for Restore Defaults.
4. Press the up or down arrow key to select YES or NO from the warning screen. Then press ENTER.

Section 9: System Operation

Operation of the control panel is simple. Menus guide you step-by-step through operations. This section of the manual is an overview of the Operation Menus. Please read this entire section carefully before operating the panel.

9.1 Annunciator Description

Figure 9.1 shows the annunciator that is part of the control panel board assembly.

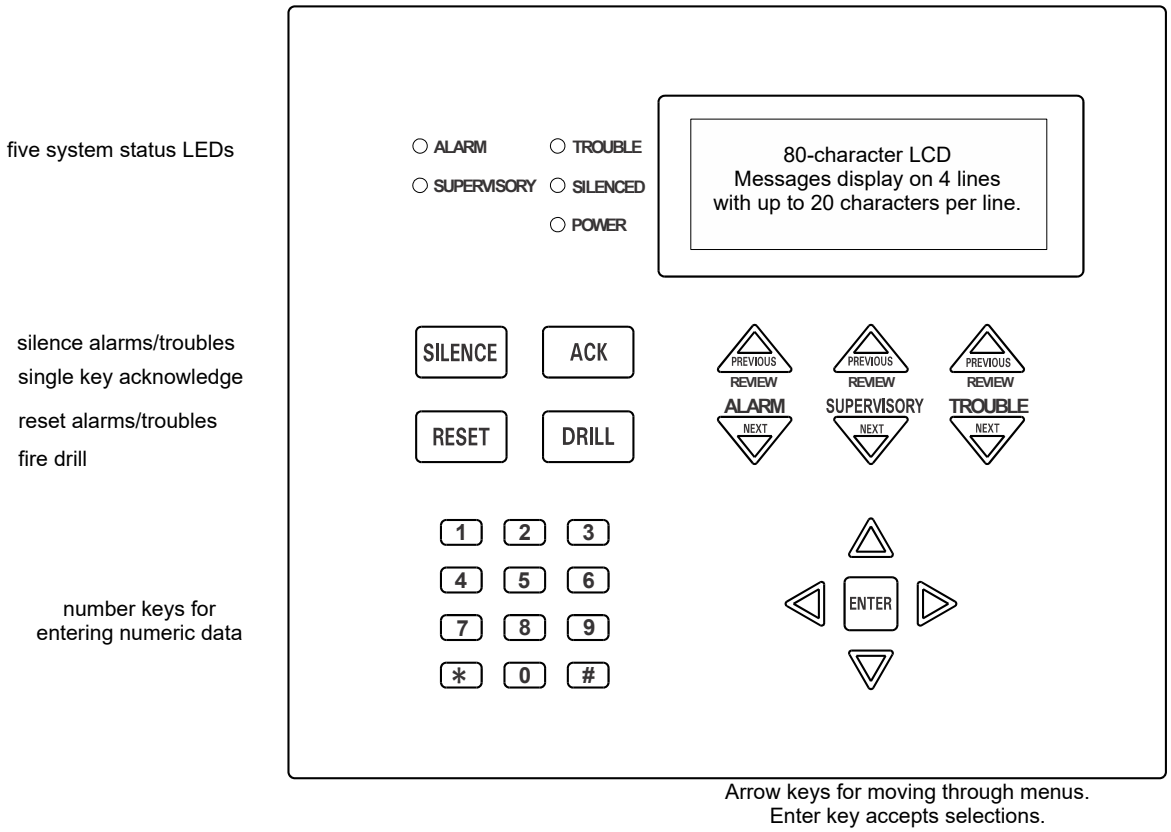

Figure 9.1 Control Panel Annunciator

9.1.1 LCD Display

The control panel LCD displays system messages, annunciates alarms, supervisories and troubles, provides status information, and prompts for input. These messages can be up to 80 characters, displaying over four lines of 20 characters each. Annunciator keys beep when they are pressed.

9.1.2 Banner

The banner is the message that displays on the control panel when the system is in normal mode (no alarm or trouble condition exists and menus are not in use). You can create a customized message that will display instead of the internal (default) message. See Section 8.6.5 for information on customizing the banner.

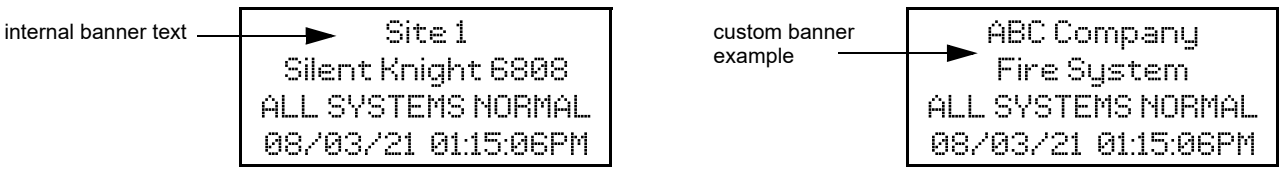

Figure 9.2 Banner Display Examples

9.2 Menu System

The control panel is easy to operate from the Main Menu. To view the Main Menu press the ENTER or right arrow key on the control panel or remote annunciator. This will bring up the panel login menu, as described in Section 9.2.1. Once validated, the user will be able to access the Main Menu as shown in Section 9.2.2. Select the desired option. You will be prompted for as access code if required.

The control panel supports up to 20 access codes. The profile for each access code (or user) can be modified through the network programming option (see Section 6.2.5 for access code programming).

9.2.1 Panel Login Menu

After pressing ENTER, and 1 for the login menu, a screen will prompt for the type of access account, Administrator or User. An administrator has the ability to modify user accounts and view the cybersecurity log. The User account has access to panel programming.

Admin Profiles

After initial power-up, the 6808 requires a password change and user account setup before programming. Only Admin1 will be active. Using the login for Admin1, the default password (0000000) must be changed to a new, unique password. This new password must be 7-digits and cannot be sequential or easily guessed. If the password is not changed, a default password trouble will appear on the panel.

There is a maximum of two administrator profiles available. After the administrator account is set up, you must create a User account(s). Only a User account has the ability to program the control panel. There is a maximum of 18 User accounts available.

Admin accounts can:

- View cybersecurity logs with date/time stamp
- Edit name to user profiles
- Enable/disable user profiles
- Modify access codes of user profiles
- Edit access to panel functions
- Change computer access code
- Restore factory default settings to the panel

User (Installer) Profiles

There are two programming levels which will access the Programming screens. From either of the screens, access to specific system and device features or programming may be obtained. An “Installer” can program local panel data relating to device types, zoning, messages, control panel functions, etc. A “Multi-site Installer” can program panel data across a network. A user has the ability to change their administrator-assigned password after it has been assigned for the first time. Refer to Section 6.2.5 on page 61.

- Profile 1 is the profile used that dictates what functions to which the Fire Fighter Key has access. Because this is the profile used for a key, the User Name and the Access Code cannot be edited.
- Profile 2 is defaulted as “Installer” and profile 3 is defaulted to “Multi-Site Installer”. Profiles 4-18 are empty profiles available for assignment. User profiles 2-18 can be edited for name and panel functions. Table 9.1 lists the panel functions that can be selected for each user profile.

Type of Function	Selectable Functions
Panel Operations	System Reset
	System Silence
	System Ack
	Fire Drill Key
	*F1 Function Key
	*F2 Function Key
	*F3 Function Key
	*F4 Function Key

Table 9.1 User Profile Selectable Panel Functions

Type of Function	Selectable Functions
Panel Menus	System Tests
	Fire Drill Menu
	Indicator Test
	Walk Test-No Report
	Walk Test -With Report
	Communicator Test
	Clear History Buffer
	Point Functions
	Disable/Enable Point
	Point Status
	Set SLC Device Address
	SLC Single Device Locater
	SLC Multiple Device Locater
	I/O Point Control
	Event History
	Set Time & Date
	System Information
	Network Diagnostics
	Network Programming
	Panel Programming
	Send/Receive Firmware Update
*Function Keys are only available on the 6860 LCD annunciator.	

Table 9.1 User Profile Selectable Panel Functions

Invalid Password/Panel Timeout

If a password is entered incorrectly or is not a valid password, the panel will display an error message. You must hit ENTER or the left arrow key and re-enter the password correctly. After ten invalid attempts, the panel will panel will lock for 30 seconds and then you can try again. However, if the password has been forgotten, record the 20-character code displayed on the panel and contact Technical Services. After proper authentication, the password will be supplied.

9.2.2 Main Menu Overview

The chart below is a brief overview of the Main Menu. These options are described in greater detail throughout this section of the manual.

Main Menu Options	Description
1- System Tests	Access to Fire Drill, Indicator Test, Walk Tests, Communicator Test, Clear History Buffer, Manual AlarmNet Registration, and Manual Communicator Reset
2- Point Functions	Enable/disable points, Point Status, SLC Single Device Locater, SLC Multiple Device Locater, and I/O Point Control
3- Event History	Display event history on the LCD. See Section 9.3.3 for more information.
4- Set Time and Date	Set time and date for the system
5- Network Diagnostics	Ping Panel and Data Network Status
6- Network Programming	Access Learn Network, Edit Network Names, Edit Panel ID, Computer Access, Communicator Options, Voice Options, Sync Network Options
7- Panel Programming	Brings up a set of menus for programming the panel. These options are described in detail in Section 8.
8- System Information	Menus to view information about the panel such as model, ID, serial number, revision, send or receive firmware updates and feature registration activation

Table 9.2 Main Menu Options

9.2.3 Using the Menus

To move through the menus:	Use the up and down arrow key to move the cursor through the options in a menu. Use the left arrow key to move to a previous menu.
To select an option:	Enter the number of the option, or press ENTER if the option has the = symbol next to it.
Exit Menu	Press the left arrow.

9.3 Basic Operation

9.3.1 Setting Time and Date

1. Select 4 for Set Date & Time.
2. Make changes in the fields on the screen. Use right arrow to move through the fields. Use the up or down arrow key to select options in the fields.
3. When the date and time are correct, press ENTER.

9.3.2 Disable / Enable a Point

1. Select 2 for Point Functions.
2. Select 1 for Disable/Enable Point.

Disable / Enable NACs by Template

1. Press 1 for Disable NACs by Template, or press 2 to Enable NACs by Template.
2. Use the up or down arrow key to move through the list of templates. Press ENTER to select the current template.

Disable / Enable NACs by Group

1. Press 3 to Disable NACs by Group, or press 4 to Enable NACs by Group.
2. Use the up or down arrow key to move through the list of groups. Press ENTER to select the group highlighted.

Disable / Enable Zone Points

1. Press 5 to Disable Zone Points, or press 6 to Enable Zone Points.
2. Use the up or down arrow key to move through the list of zones. Press ENTER to select the zone highlighted.

Disable / Enable Point

1. Press 7 to Disable /Enable Point.
2. Choose module.
3. Use the up or down arrow key to choose point and press ENTER.
4. Press right arrow to disable or enable point.

Inhibit Output Group

Inhibiting an output group prevents the group from being utilized by system mapping. While inhibited, no event in the system can activate the output group.

1. Press 8 to Inhibit Output Group.
2. Use the up or down arrow key to select the group to be inhibited.
3. Press the right arrow key to inhibit the group.
4. Press right arrow again to enable the group.

9.3.3 View Event History

Use the View Event History feature to display events on LCD. From the Main Menu, press 3 to select Event History. Events will begin displaying with most recent events first.

The panel can store up to 1000 events. When it reaches its 1000-event capacity, it will delete the oldest events to make room for the new events as they occur. In networked setups, each panel stores up to 1000 of its own events. When using HFSS Honeywell Fire Software Suite, all 1000 events from every panel in the network will be uploaded.

On multi-site displays, pressing ENTER or right arrow brings you directly into View Event History and allows you to view the Event History from every panel in each of the sites that the multi-site display is assigned to.

To clear the event history

From the Installer menu select 1 for System Tests. From the test menu select 6 Clear History Buffer.

Single Key Acknowledge

This feature allows the user to press the ACK and display the oldest un-acknowledged event in the system. Pressing ACK again will acknowledge the event, then display the next oldest un-acknowledged event without pressing the arrow keys.

9.3.4 Conduct a Fire Drill

This system test initiates a Fire Drill alarm and activates Fire Drill mapping for 10 minutes or until a user manually exits the fire drill.

1. From the Main Menu, press 1 for System Tests.
2. Press 1 for Fire Drill. You will be prompted to press ENTER.
3. The drill will begin immediately after you press ENTER.
4. Press any key to end the drill. (If you do not press any key to end the fire drill manually, it will time out automatically after ten minutes).

If a fire drill switch has been installed, activating the switch will begin the drill; deactivating the switch will end the drill.

9.3.5 Conduct an Indicator Test

The Indicator Test checks the annunciator LEDs, PZT, and LCD display.

1. From the Main Menu, press 1 for System Tests.
2. Press 2 for Indicator Test. The system turns on each LED several times and sounds the piezo. At the same time, it scrolls each available character across the LCD. A problem is indicated if any of the following occurs:
   - A LED does not turn on
   - You do not hear a beep
   - All four lines of the LCD are not full

This test takes approximately 15 seconds to complete. You can press any key to end manually while the test is still in progress. When the test ends, you will be returned to the Test Menu.

9.3.6 Conduct a Walk Test

Walk Test is a feature which allows one person to test the fire alarm system. The Walk Test will run for 4 hours or until the user manually exits. If an alarm or pre-alarm condition is occurring in the system, you will not be able to enter the walk test. A walk test may only be initiated if the test is enabled in the user profile.

1. From the Main Menu, press 1 for System Tests.

CAUTION: ALARM VERIFICATION

IF ANY ALARM VERIFICATION ZONES ARE BEING USED, THE USER WILL BE ASKED IF THEY WISH TO DISABLE ALARM VERIFICATION DURING WALK TEST. THIS OCCURS FOR EITHER WALK TEST OPTION.

2. Select 3 for Walk Test-No Report. The LCD will display “WALK TEST STOPPED” on Line 1 and “ENTER = start test” on Line 3. Enter the time period you wish the NAC circuit to be active for each alarm (06 to 180 seconds). By selecting this option, central station reporting is disabled while the test is in progress.

   OR

   Select 4 for Walk Test-with Report. The LCD will display “WALK TEST STOPPED” on Line 1 and “ENTER = start test” on Line 3. Enter the time period you wish the NAC circuit to be active for each alarm (06 to 180 seconds). By selecting this option, central station reporting will occur as normal during the walk test.

   The panel generates a TEST report to the central station when the walk test begins. During a walk test, the panel’s normal fire alarm function is completely disabled, placing the panel in a local trouble condition. All zones respond as 1-Count zones (respond when a single detector is in alarm) during a walk test. Each alarm initiated during the walk test will be reported and stored in the event history buffer.
3. To End the Walk test, access the Main Menu. Select 1 for System Test, then press 3 or 4. Press ENTER to end the walk test. The system will reset. The panel will send a “TEST RESTORE” report to the central station.

If you do not end the walk test manually within four hours, it will end automatically. If there is an alarm or pre-alarm condition in the system, you will not be able to enter the walk test.

NOTE: The panel does not do a full 30 second reset on resettable power outputs. As soon as the device is back to normal, the panel is ready to go to the next device.

9.3.7 Conduct a Communicator Test

1. From the Main Menu, press 1 for System Tests.
2. Select 5 for Communicator Test. The screen will display “Manual communicator test started”. When the test is completed, you will be returned to the Test Menu. A manual communicator test requires that at least one daily test in the network be enabled in communicator programming.
3. The Manual communicator test will be communicated out both Phone Lines and Ethernet/Cellular paths if they are all programmed. Each manual communicator test will alternate between one of the Phone Line paths and one of the AlarmNet paths.

9.3.8 Manual AlarmNet Registration

1. From the Main Menu, press 1 for System Tests.
2. Select 8 for Register AlarmNet. The screen will display and ask for confirmation. Feedback will be given if the command was sent or not.

9.3.9 Silence Alarms or Troubles

Press SILENCE to turn off silenceable outputs and annunciator PZTs. If an external silence switch has been installed, activating the switch will silence fire alarms or troubles. If you are already using system menus when you press SILENCE, you will not need to enter your code.

NOTE: Alarm and trouble signals that have been silenced, but the detector remains un-restored, will resound every 4 or 24 hours depending on user selection until the detector is restored. Refer to “Auto-Resound (4 or 24 hours)” on page 94.

NOTE: Multi-site displays do not allow for silencing multiple sites. Pressing SILENCE will only locally silence the PZT built into the annunciator.

9.3.10 Reset Alarms

Press RESET and enter your code or rotate the key at the prompt. If an external reset switch has been installed, activating the switch will reset alarms. If you are already using system menus when you press RESET, you will not need to enter your code or rotate the key.

NOTE: Multi-Site displays do not allow for resetting multiple sites.

Reset Communicator

This options allows the user to reset the communicator. The LCD will display:

"Resetting Communicator… Please Wait"

You will be returned to the Main Menu when the reset is complete.

The communicator is not allowed to be reset when alarms or supervisories are active. Communicator reset is not allowed if any of the following are active:

- Fire Alarm
- Fire Supervisory
- Fire Pre-Alarm
- CO Alarm
- CO Supervisory

9.3.11 Check Detector Sensitivity Through Point Status

The control panel constantly monitors smoke detectors to ensure that sensitivity levels are in compliance with NFPA 72.

If sensitivity for a detector is not in compliance, the panel goes into trouble, generating a CAL TRBLE condition. A detector enters a CAL MAINT state to indicate that it is approaching an out of compliance condition (but is currently still in compliance).

When a CAL TRBLE condition occurs, the Central Station receives a detector trouble report ("373" and the zone or point for Contact ID format; "FT" and the zone or point in SIA format).

To check sensitivity for an individual detector, follow the steps below.

1. From the Main Menu, press 2 for Point Functions.
2. Press 2 for Point Status.
3. Select the module where the point you want to check is located.
4. Enter the number of the point you want to check and press ENTER.

5. A screen similar to those shown in below will display.

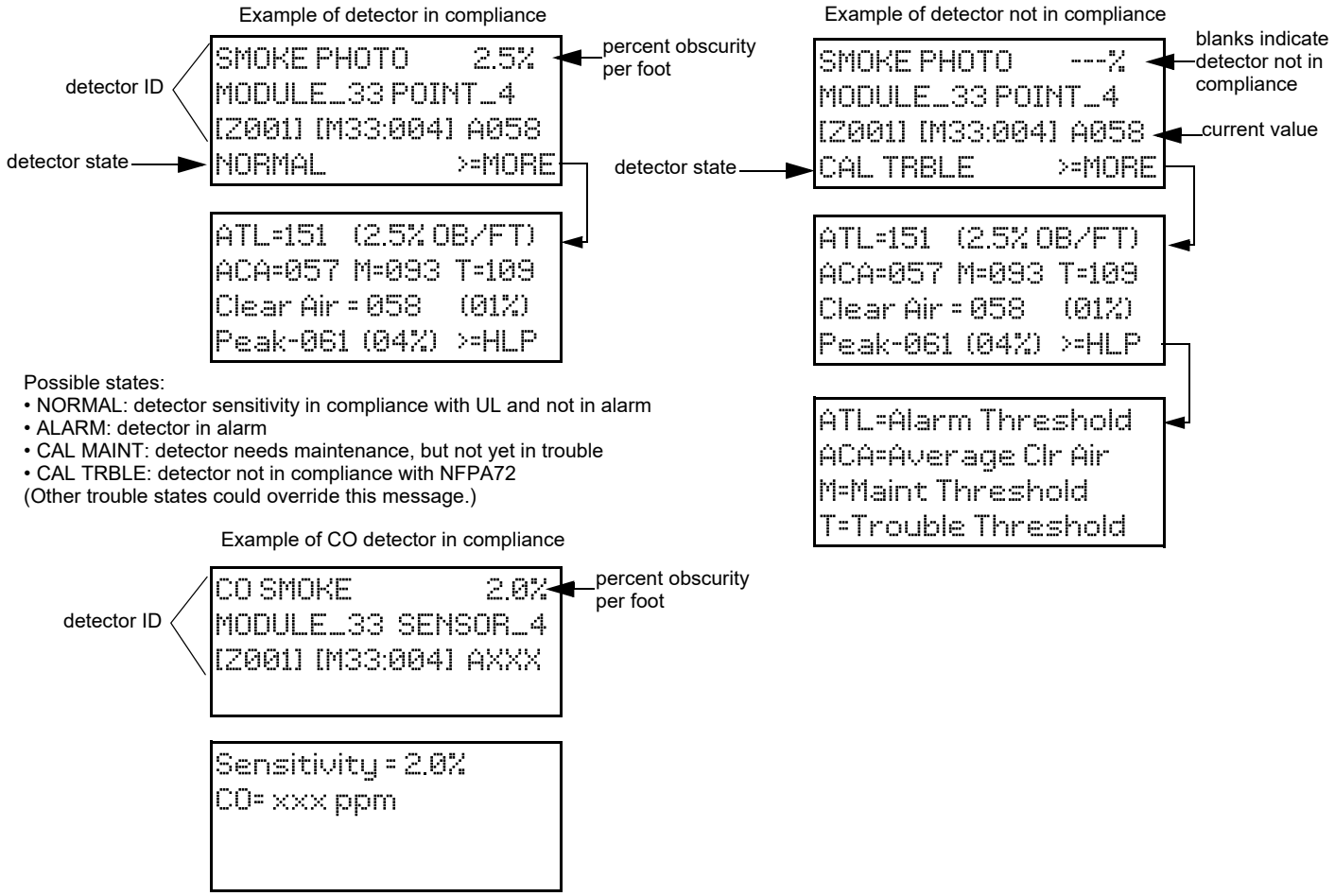

Figure 9.3 Checking Detector Sensitivity Compliance

You can print the detector status by uploading the detector status to, and printing from the HFSS Honeywell Fire Software Suite.

9.3.12 View Status of a Point

1. From the Main Menu, select 2 for Point Functions.
2. Select 2 for Point Status.
3. From the list that displays, press ENTER to select the module where this point is located. Next, enter the point to display. The screen that displays will show you if the point has a trouble and will provide sensitivity compliance information. (See Section 9.3.11 for complete information about detector sensitivity compliance.)

9.3.13 View Alarms or Troubles

When the system is in alarm or trouble, you can press the down arrow to view the location of an alarm, supervisory, or trouble.

9.3.14 System Information

From the Main Menu, press 8 to access the System Information menu.

About Panel

Press 1 to access About Panel to view the panel model, serial number, system version number, and date.

Send/Receive Firmware Updates

The 6808 has the ability to be updated in the field. The latest 6808 Firmware Update Utility can be downloaded from the Silent Knight website, www.silentknight.com. Once a panel has been updated using the Firmware Update Utility, you can use Send/Receive firmware updates to propagate the firmware to the other panels in the network.

1. Press 2 to send a firmware update or press 3 to receive a firmware update from the System Information Menu. Available panels are listed in the Menu.
2. Use the up or down arrow key to select a panel to send/receive an update to/from. Press ENTER to start the update process.

Ethernet Info

1. Press 5 from the System Information Menu for the Ethernet Information.

```
<Ethernet Info>
  MAC:00D0.2D73.489C
    IP:000.000.000.000
DHCP: Y        Next►
```

```
<Ethernet Info>
 Sub: 000.000.000.000
  GW: 000.000.000.000
◄Back  MAC CRC:0000
```

AlarmNet Info

Press 6 from the System Information menu for AlarmNet Info.

- Cell Strength: 0 to 100%
- Status: Registered/Not Registered

AlarmNet Temporary PIN

Press 7 from the System Information menu to enter an AlarmNet Temporary PIN. This is issued by AlarmNet to register a new panel in case the existing FACP is ever replaced.

9.4 Panel Operating Modes

The control panel can be in one or more of seven conditions at any given moment: Normal, Alarm, Pre-alarm, Supervisory, Trouble, Silenced, and Reset. Table 9.3 describes the behavior of the panel in each of these modes.

When looking at the LCD, the screen will display FIRE for the “Fire System”, or CO for the “CO System”. The highest priority event will display first and include the event count.

Press the down arrow to view the location and type of alarm, supervisory, or trouble. If the panel is programmed to Auto Display Event, information describing the highest priority active event will display on the first two lines. The third and fourth line will show the status of whch event types are active for each system (fire and CO). Auto Display Event activates after two minutes of annunciator inactivity.

```
FIRE: ALRM  SUPR
  CO: ALRM  SUPR

<Press ↓ for status>
```

Figure 9.4 Highest Priority Event Display

This screen will display when more that 3 event types are active.

```
FIRE: ALRM SUPR TRBL
  CO: ALRM SUPR
 SYS: TRBL
```

Figure 9.5 Event Types Screen

Operating Mode	Occurs When	System Behavior	In This Mode You Can
Normal	No alarm, supervisory, or trouble condition exists and menus are not in use.	SYSTEM POWER LED is on. The All Systems Normal display indicates that the system is in normal mode. The current date and time display on the last line of the LCD. Site 1 Model 6808 ALL SYSTEMS NORMAL 08/03/21 01:45:52PM	Enter the appropriate code, or rotate the key to activate the Main Menu.
Alarm	A smoke detector goes into alarm or a pull station is activated. CO detector goes into alarm. If more than 3 categories are active at a single time, the screen will display as shown.	The system will report events to the central station. The onboard annunciator will sound loud, steady beeps to distinguish alarm signals. For a fire alarm, the sequence is a loud steady beep.(Any notification devices attached to the system will also sound). The GENERAL ALARM LED flashes. The LCD displays a screen similar to this one. FIRE: ALRM Waterflow SW Zone_1 1 of 1 Info> Pressing the right arrow key or Info will display the location macro, date/time stamp, and site/panel number if applicable. Site 1 CO ALRM [Press ↓ for status] Pressing the down arrow key to view the type and location of alarm. (Message will alternate with the date/time display.) FIRE: ALRM SUPR TRBL CO: ALRM SUPR SYS: TRBL	Press the down arrow to view the alarm. A screen similar to this one displays. ALARM: MAN_PULL ← device type MODULE_33 POINT_2 ZONE_2 3 of 5 showing 3 of 5 events Press SILENCE and enter an Access Code (or activate the key) to silence the annunciator (and any notification devices attached to the system). When the alarm condition clears, press RESET and enter a code (or activate the key) to restore the panel to normal.

Table 9.3 Panel Operating Modes

Operating Mode	Occurs When	System Behavior	In This Mode You Can
Supervisory	The system detects a supervisory condition. A Supervisory with a CO detector.	The system will report events to the central station. The onboard annunciator sounds a loud, pulsing beep to distinguish supervisory signals. For fire supervisory signals, the sequence is one second on, one second off. The SUPERVISORY LED flashes. The LCD displays a screen similar to this one. FIRE: SUPERVISORY Supervisory Sw SBUS_97 MODULE_2 1 of 1 Info> Pressing the right arrow key or Info to display the location macro, date/time stamp, and site/panel, if applicable. Site 1 CO: SUPR [Press ▽ for status] Press the right arrow key or Info to view the type and location of the Supervisory event. The message will alternate with the time/date display.	Press the down arrow to view the fire supervisory condition. A screen similar to this one displays. SUPERVSY: MAN_PULL ← device type MODULE_33 POINT_2 [Z002] [M33] 1 of 1 showing 1 of 1 event Press SILENCE and enter an Access Code (or activate the key) to silence the annunciator. Once the supervisory condition has been corrected, the system will restore automatically.
Trouble	A system trouble condition occurs. A trouble condition with a CO detector	The system will report events to the central station. The onboard annunciator sounds a loud, pulsing beep in the sequence one second on, nine seconds off. The SYSTEM TROUBLE LED flashes. The LCD displays a screen similar to this one. FIRE: TROUBLE 1 of 1 Info> Press the right arrow key or Info to display the location macro, date/time stamp, and site/panel, if applicable. Site 1 CO: TROUBLE [Press ▽ for status] Press the right arrow key or Info to view the type and location of the Trouble event. The message will alternate with the time/date display.	Press down arrow to view the fire trouble. A screen similar to this one displays. TROUBLE: CO Smoke ← device type SBUS_33 SENSOR_2 zone # [Z002] [M33:S002] ← module/point trouble type Missing 5 of 8 In this case, the panel does not see a detector that should be on the loop. showing 5 of 8 events Press SILENCE to silence the annunciator. Once the trouble condition has been fixed, the system will restore itself automatically.
Pre-alarm	A single detector trips in a 2-Count zone. (2-Count means two detectors must trip before an alarm is reported.)	The touchpad piezo beeps. The LCD displays a screen similar to this one. FIRE: PREALARM Det-Photo SBUS_97 SENSOR_33 1 of 1 Info> Press the right arrow key or Info to display the location macro, date/time stamp, and site/panel, if applicable.	Press down arrow to view the Prealarm. A screen similar to this one displays. PREALARM:SMOKE-PHOT device type MODULE_33 POINT_2 [Z002] [M33] 1 of 1 showing 1 of 1 event All system operations are available in this mode.

Table 9.3 Panel Operating Modes (Continued)

Operating Mode	Occurs When	System Behavior	In This Mode You Can
Reset	The RESET button is pressed followed by a valid code, if necessary.	All LEDs are on briefly then the LCD displays “RESET IN PROGRESS”. If the reset process completes normally, the date and time normal mode screen displays.	Menus are not available during the reset process.
Silenced	An alarm or trouble condition has been silenced but still exists. To silence alarms and troubles, press SILENCE followed by the Installer or User Code, if necessary.	The SYSTEM SILENCE LED is on. The SYSTEM TROUBLE, SUPERVISORY, and/or GENERAL ALARM LED (depending on condition) is on. The annunciator (and any notification devices attached to the system) will be silenced.	Press down arrow to view the location of the alarm, supervisory, or trouble. When the condition no longer exists, the SYSTEM SILENCED and SYSTEM TROUBLE LED, SUPERVISORY and/or GENERAL ALARM LEDs turn off.

Table 9.3 Panel Operating Modes (Continued)

9.4.1 Multi-Site Annunciator and Multi-Site User Access

Multi-site annunciators are unique as they can display the status and event history of all sites they are assigned to. These displays can be especially useful in guard shacks or security centers. A multi-site display is indicated by the words “Multi-Site Display” at the top of the Idle screen.

- The F-Macro keys are disabled until a multi-site user access code has been entered and a specific site has been selected.
- Multi-site Annunciator silencing rules:
  - If any new troubles, supervisory, pre-alarms, or alarms are triggered in any assigned sites, locally silenced annunciators will resound.
  - If a multi-site annunciator is locally silenced for 4 or 24 hours, depending on user selection, the locally silenced annunciators will resound.
- The 6808 Menu System is disabled on a multi-site annunciator. Pressing the Right or Enter keys will bring you straight into event history for assigned sites. To get into the menu system, a multi-site user password must be entered and then a site must be selected from the site selection menu. Once this is done you will have access to the Idle screen of that site and the annunciator will temporarily act like a single site annunciator.
- A multi-site annunciator will sound the highest priority tone from the sites it is assigned to.

NOTE: A multi-site display is created in Module programming in the edit properties menu for an annunciator. See Section 8.2.1.

9.5 Releasing Operations

The control panel supports two types of releasing: Double Interlock Zone and Single Interlock Zone.

- The Double Interlock Zone operation requires an interlock switch input in the system.
- The Single Interlock Zone does not. An interlock switch is typically a dry-contact pressure switch.

When Single or Double Interlock Zone releasing is selected using HFSS, the software suite will automatically default the following system parameters:

NOTE: The defaults created can be modified through programming if desired.

- Output Group 2 is created. Output Group 2 will be defaulted as a “Detector Alarm” output group for all releasing zones. NAC [98:001] is assigned to Output Group 2.
- Output Group 3 is created. Output Group 3 will be defaulted as a “Interlock Release Alert” output group for all releasing zones. NAC [98:002] is assigned to Output Group 3.
- Output Group 4 is created. Output Group 4 will be defaulted as “Interlock Release Alarm” output group for all releasing zones. NAC circuit [98:003] is assigned to Output Group 4.

NOTE: The Installer must define which input points will be used for detectors, manual release switches, or interlock/pressure switches.

NOTE: For manual release operations, FM approved/ UL listed releasing manual station must be used. Refer to the *Device Compatibility Document* for approved releasing devices.

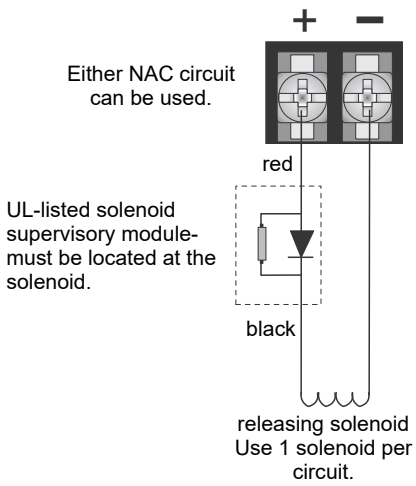

Figure 9.6 Wiring Configuration for Solenoid

NOTE: For releasing operations, a manual releasing disconnect switch is required per UL 864. Refer to the *MRD-1 Series Document* for installation instructions.

9.5.1 Single Interlock Zone Releasing

A single interlock zone utilizes a minimum of two addressable detectors and a designated manual release switch. Only addressable detectors can be used. No conventional detectors can be used.

Conditions Required for a Pre-Alert Output Activation

If any single addressable detector is activated, the “Pre-Alert” output will activate. This alerts the user that the initial stages required for a release condition are present. (Refer to Table 9.4).

Conditions Required for a General Alarm and Release Output Activation

If two or more addressable detectors, or a manual release switch activate, the “Alarm” and “Release” outputs will activate and the “Pre-Alarm” output will deactivate. (Refer to Table 9.4 below.)

Inputs	Output Results							
1st Addressable Detector		X		X		X		X
2nd Addressable Detector			X	X			X	X
Manual Release Station					X	X	X	X
	Normal	**Pre-Alert**		**Release and General Alarm**				

Table 9.4 Single Interlock Zone Operation

CAUTION: DETECTOR SPACING
DETECTORS MUST BE INSTALLED AT 0.7 TIMES THE LINEAR SPACING AS DESCRIBED IN NFPA 72

9.5.2 Double Interlock Zone Releasing

A Double Interlock Zone uses a minimum of two addressable detectors, a designated manual release switch, and an interlock switch input. An interlock switch is typically a dry-contact pressure switch and will be referred to as an interlock/pressure switch in this document. Only addressable detectors can be used. No conventional detectors can be used.

Conditions Required for a Pre-Alert Output Activation

If any single addressable detector is activated, the “Pre-Alert” output will activate. This alerts the user that the initial stages required for a release condition are present. (Refer to Table 9.5.)

Conditions Required for a General Alarm Output Activation

If two addressable detectors, a manual release switch is activated, or an interlock switch is active, the “Pre-Alert” and “General Alarm” outputs will activate.

Conditions Required for a Release Output Activation

Any release requires the activation of an interlock switch, and either a manual release switch or 2 activated addressable detectors. When these conditions are met, the “Release” and “General Alarm” outputs will activate, and the “Pre-Alert” outputs will deactivate.

Inputs	Output Results															
1st Addressable Detector		X		X		X		X		X		X		X		X
2nd Addressable Detector			X	X			X	X			X	X			X	X
Manual Release Station					X	X	X	X					X	X	X	X
Interlock/Pressure Switch									X	X	X	X	X	X	X	X
	Normal	**Pre-Alert**		**Pre-Alert and General Alarm**								**Pre-Alert and General Alarm**				

Table 9.5 Double Interlock Zone Operation

CAUTION: DETECTOR SPACING
DETECTORS MUST BE INSTALLED AT 0.7 TIMES THE LINEAR SPACING AS DESCRIBED IN NFPA 72

9.6 Smoke Alarm Verification

Figure 9.7 illustrates how the Smoke Alarm Verification cycle operates.

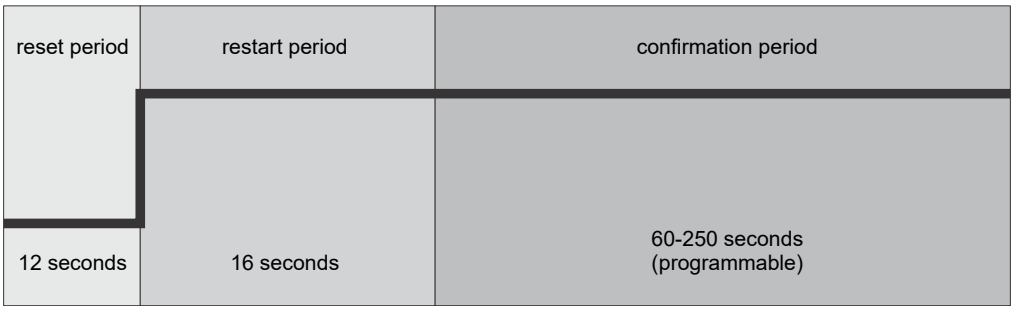

Figure 9.7 Smoke Verification Cycle

If there is no alarm indication during the confirmation period, the system will return to normal operation.

9.7 Function Keys

The function keys on the 6860 annunciator only have multiple features. Their macro key functionality can simplify the disabling, activating, or inhibiting points or groups respectively. They can also be used as a status type activation event and for activating Map Inhibit. Each F-Key macro can hold 50 events.

To Access the F-Key Recording Menu:

1. From the Idle screen, press and hold the F-Key for 5 seconds.
2. Enter a PIN with F-Key macro recording privileges, if prompted.

9.7.1 Recording an F-Key Macro

1. Access the F-Key Recording menu and select the ‘Start FKEY Recording’ option.
2. The panel will return to the Idle screen. Notice the 4th line on the display now alternates with “F# Key Recording”, where # is the number of the F-Key being recorded.
3. Any Disabling or Activating of points, output groups, or templates from the site at this point will be programmed into the macro. Do this by going to any annunciator within the site and entering Main Menu > Point Functions and use Disable/Enable Point or use I/O Point Control to: disable output groups or individual points, or activate individual points.
4. Once you are finished with disabling or activating points/output groups, enter the F-Key Recording Menu again and select the ‘End FKEY Recording’ option.
5. The panel will return to the Idle screen.

9.7.2 Aborting an F-Key Macro Recording Session

1. After an F-Key macro recording session has been started, the session can be canceled at any time by accessing the F-Key Recording menu and selecting ‘Abort FKEY Recording’ option.
2. The panel will return to the Idle screen.

9.7.3 Erasing an F-Key Macro

1. If an F-Key macro has already been recorded, you can erase it by accessing the F-Key Recording menu and selecting the 'Erase FKEY Macro' option.
2. The panel will return to the Idle screen.

9.7.4 Using a Recorded F-Key Macro

1. From the Idle screen on any annunciator in the site, press the F-Key you want to activate.
2. Once finished, to de-activate the macro press the F-Key again.

9.7.5 F-Key Status Event

When an F-Key is enabled, it activates its corresponding F-Key Active event. This is a status type event that can activate outputs without showing any status on annunciator displays. This should be used for ancillary purposes only.

9.7.6 F-Key Map Inhibit

The F-Keys have the ability to disable event - output group mapping for the purpose of simulating that the map doesn't exist. This can be setup to allow for testing purposes where notification of an entire building is not desired during the test. This option is programmable for each output group map through HFSS Honeywell Fire Software Suite.

When an F-Key is active and a map in the system is set to be disable by Map Inhibit, the system will show a trouble event indicating it as such.

Section 10: Reporting

This section lists receivers that are compatible with this control panel, and the reporting codes sent by the control panel for SIA and Contact ID formats.

10.1 Receivers Compatible with the Control Panel

Table 10.1 lists receivers compatible with the control panel.

Manufacturer	Model	Format
Silent Knight by Honeywell	Model 9800	SIA and Contact ID
	Model 9000 (SIA formats)	SIA
Honeywell Security	AlarmNet 7810-ir	IP and Cellular Receiver, Contact ID only
Ademco	MX8000	SIA and Contact ID
Ademco	Model 685 (Contact ID)	Contact ID
Sur-Gard	SG-MLR2-DG (V. 1.64 or higher)	SIA and Contact ID
Osborne Hoffman	Quickalert	SIA and Contact ID

Table 10.1 Receivers Compatible with the Control Panel

	SIA Reporting Format				Contact ID Reporting Format			
	SIA pi Modifier			SIA				
Event Description	Module ID # (If Any)	SIA Event Codes	Parameter	Fixed Length Format NN - panel ID XX- SBUS ID ZZZ- Zone # PPPP- Point # GGG- Group # E- Emergency # RRRR-Receiver #	Qualifier	Event Code	Group #	Contact #
System Events	**System Events are reported when either "Report by Point" or Report by Zone is selected**							
AC power low trouble		AT	0	ATNN000000	1	301	00	000
AC power low trouble restore		AR	0	ARNN000000	3	301	00	000
Auto dialer test communications trouble line 1		YC	1	YCNN000001	1	350	Receiver #	001
Auto dialer test communications trouble line 1 restore		YK	1	YKNN000001	3	350	Receiver #	001
Auto dialer test communications trouble line 2		YC	2	YCNN000002	1	350	Receiver #	002
Auto dialer test communications trouble line 2 restore		YK	2	YKNN000002	3	350	Receiver #	002
Automatic test normal		RP	0	RPNN000000	1	602	00	000
Automatic test off normal		RY	0	RYNN000000	1	608	00	000
Battery voltage trouble		YT	Exp. ID	YTNNXX0000	1	302	Exp. ID	000
Battery voltage trouble restore		YR	Exp. ID	YRNNXX0000	3	302	Exp. ID	000
Date changed event		JD	0	JDNN000000	1	625	00	000
EVS Reset		OR	1	ORNN000001	1	401	00	001
Emergency System Overridden		QS	0	QSNN000000	1	244	00	000
Emergency System Overridden Restore		QR	0	QRNN000000	3	244	00	000
Fire drill has begun		FI	0	FINN000000	1	604	00	000
Fire drill has ended		FK	0	FKNN000000	3	604	00	000
F1 Mapping Inhibited		FT	2001	FTNN002001	1	570	00	001
F1 Mapping Inhibited Restoral		FJ	2001	FJNN002001	3	570	00	001
F2 Mapping Inhibited		FT	2002	FTNN002002	1	570	00	002
F2 Mapping Inhibited Restoral		FJ	2002	FJNN002002	3	570	00	002
F3 Mapping Inhibited		FT	2003	FTNN002003	1	570	00	003
F3 Mapping Inhibited Restoral		FJ	2003	FJNN002003	3	570	00	003
F4 Mapping Inhibited		FT	2004	FTNN002004	1	570	00	004

Table 10.2 Report Formats Table

	SIA Reporting Format				Contact ID Reporting Format			
	SIA pi Modifier			SIA				
Event Description	Module ID # (If Any)	SIA Event Codes	Parameter	Fixed Length Format NN - panel ID XX- SBUS ID ZZZ- Zone # PPPP- Point # GGG- Group # E- Emergency # RRRR-Receiver #	Qualifier	Event Code	Group #	Contact #
F4 Mapping Inhibited Restoral		FJ	2004	FJNN002004	3	570	00	004
Fire Reset		OR	0	ORNN000000	1	401	00	000
Fire System Overridden		FS	0	FSNN000000	1	245	00	000
Fire System Override Restore		FR	0	FRNN000000	3	245	00	000
Ground fault condition trouble		YP	Exp. ID	YPNNXX0000	1	310	Exp. ID	000
Ground fault condition trouble restore		YQ	Exp. ID	YQNNXX0000	3	310	Exp. ID	000
Initial power up		RR	0	RRNN000000	1	305	00	000
Local programming aborted or ended with errors		LU	0	LUNN000000	1	628	00	000
Local programming begin		LB	0	LBNN000000	1	627	00	000
Local programming ended normally		LS	0	LSNN000000	1	628	00	000
Network node trouble (panel missing)		EM	Panel ID	EMNNNN0000	1	334	Panel ID	000
Network node trouble restore (panel no longer missing)		EN	Panel ID	ENNNNN0000	3	334	Panel ID	000
OPG Inhibit Trouble		FT	Group # + 1000	FTNN001GGG	1	320	00	Group #
OPG Inhibit Trouble Restore		FJ	Group # + 1000	FJNN001GGG	3	320	00	Group #
OPG Inhibit of Releasing Group		SS	Group # + 1000	SSNN001GGG	1	203	00	Group #
OPG Inhibit of Releasing Group Restore		SR	Group # + 1000	SRNN001GGG	3	203	00	Group #
Phone line 1 trouble detected		LT	1	LTNN000001	1	351	00	000
Phone line 1 trouble restore		LR	1	LRNN000001	3	351	00	000
Phone line 2 trouble detected		LT	2	LTNN000002	1	352	00	000
Phone line 2 trouble restore		LR	2	LRNN000002	3	352	00	000
Printer is off-line trouble		VZ	Exp. ID	VZNNXX0000	1	336	Exp. ID	000
Printer is off-line trouble restore		VY	Exp. ID	VYNNXX0000	3	336	Exp. ID	000
Printer is out of paper trouble		VO	Exp. ID	VONNXX0000	1	335	Exp. ID	000
Printer is out of paper trouble restore		VI	Exp. ID	VINNXX0000	3	335	Exp. ID	000
Releasing Notif/Control Circuit Disabled	pi Exp. ID	SS	Point #	SSNNXXPPPP	1	203	Exp. ID	Point #
Releasing Notif/Control Circuit enabled	pi Exp. ID	SR	Point #	SRNNXXPPPP	3	203	Exp. ID	Point #
Remote programming aborted or ended with errors		RU	0	RUNN000000	1	413	00	000
Remote programming ended normally		RS	0	RSNN000000	1	412	00	000
Repeater ground fault trouble		EM	0103	EMNN000103	1	334	Panel ID	103
Repeater ground fault trouble restore		EN	0103	ENNN000103	3	334	Panel ID	103
Repeater missing trouble		EM	0100	EMNN000100	1	334	Panel ID	100
Repeater missing trouble restore		EN	0100	ENNN000100	3	334	Panel ID	100
Repeater Rx1 communication trouble		EM	0101	EMNN000101	1	334	Panel ID	101
Repeater Rx1 communication trouble restore		EN	0101	ENNN000101	3	334	Panel ID	101
Repeater Rx2 communication trouble		EM	0102	EMNN000102	1	334	Panel ID	102
Repeater Rx2 communication trouble restore		EN	0102	ENNN000102	3	334	Panel ID	102

Table 10.2 Report Formats Table (Continued)

	SIA Reporting Format				Contact ID Reporting Format			
	SIA pi Modifier			SIA				
Event Description	Module ID # (If Any)	SIA Event Codes	Parameter	Fixed Length Format NN - panel ID XX- SBUS ID ZZZ- Zone # PPPP- Point # GGG- Group # E- Emergency # RRRR-Receiver #	Qualifier	Event Code	Group #	Contact #
SBUS Class A supervision lost		ET	Exp. ID	ETNNXX0000	1	333	Exp. ID	000
SBUS Class A supervision restore		ER	Exp. ID	ERNNXX0000	3	333	Exp. ID	000
SBUS expander trouble		ET	Exp. ID	ETNNXX0000	1	333	Exp. ID	000
SBUS expander trouble restore		ER	Exp. ID	ERNNXX0000	3	333	Exp. ID	000
SLC class A supervision trouble		ET	Exp. ID	ETNNXX0000	1	331	Exp. ID	000
SLC class A supervision trouble restore		ER	Exp. ID	ERNNXX0000	3	331	Exp. ID	000
SLC programming ended, system active		TE	0	TENN000000	3	607	00	000
SLC programming started, system shut down		TS	0	TSNN000000	1	607	00	000
SLC short circuit trouble		ET	Exp. ID	ETNNXX0000	1	332	Exp. ID	000
SLC short circuit trouble restore		ER	Exp. ID	ERNNXX0000	3	332	Exp. ID	000
Time changed event		JT	0	JTNN000000	1	625	00	000
Unable to report to account trouble		RT	Receiver #	RTNN00RRRR	1	354	00	Receiver #
Unable to report to account trouble restore		YK	Receiver #	YKNN00RRRR	3	354	00	Receiver #
User access code changed		JV	0	JVNN000000	1	602	00	000
User initiated manual dialer test		RX	0	RXNN000000	1	601	00	000
Walk test begin		TS	0	TSNN000000	1	607	00	000
Walk test end		TE	0	TENN000000	3	607	00	000
Zone Events	**Zone events are reported only when “Report by Zone” is selected**							
Auxiliary power trouble		FT	0000	FTNN000000	1	320	00	000
Auxiliary power trouble restore		FJ	0000	FJNN000000	3	320	00	000
CO Detector Alarm		GA	Zone #	GANN000ZZZ	1	162	00	Zone #
CO Detector Alarm Restore		GH	Zone #	GHNN000ZZZ	3	162	00	Zone #
CO Detector Supervisory Alarm		GS	Zone #	GSNN000ZZZ	1	200	00	Zone #
CO Detector Supervisory Alarm Restore		GR	Zone #	GRNN000ZZZ	3	200	00	Zone #
CO Detector Trouble		GT	Zone #	GTNN000ZZZ	1	373	00	Zone #
CO Detector Trouble Restore		GJ	Zone #	GJNN000ZZZ	3	373	00	Zone #
Detector Alarm		FA	Zone #	FANN000ZZZ	1	110	00	Zone #
Detector Alarm Restore		FH	Zone #	FHNN000ZZZ	3	110	00	Zone #
Detector trouble		FT	Zone #	FTNN000ZZZ	1	373	00	Zone #
Detector trouble restore		FJ	Zone #	FJNN000ZZZ	3	373	00	Zone #
EVS Switch Trouble		QT	0	QTNN000000	1	242	00	000
EVS Switch Trouble Restore		QJ	0	QJNN000000	3	242	00	000
EVS Supervisory/Tamper Alarm		QS	0	QSNN000000	1	241	00	000
EVS Supervisory/Tamper Alarm Restore		QR	0	QRNN000000	3	241	00	000
EVS Output Group Trouble		QT	Group # +1000	QTNN001GGG	1	320	00	Group #
EVS Output Group Trouble Restore		QJ	Group # +1000	QJNN001GGG	3	320	00	Group #
External Reset/Silence/Fire Drill switch trouble		UT	0000	UTNN000000	1	373	00	000
External Reset/Silence/Fire Drill switch trouble restore		UJ	0000	UJNN000000	3	373	00	000

Table 10.2 Report Formats Table (Continued)

	SIA Reporting Format				Contact ID Reporting Format			
	SIA pi Modifier			SIA				
Event Description	Module ID # (If Any)	SIA Event Codes	Parameter	Fixed Length Format NN - panel ID XX- SBUS ID ZZZ- Zone # PPPP- Point # GGG- Group # E- Emergency # RRRR-Receiver #	Qualifier	Event Code	Group #	Contact #
LOC Mic Activated EVS Alarm		QA	0	QANN000000	1	220	00	000
LOC Mic Activated EVS Alarm Restore		QH	0	QHNN000000	3	220	00	000
LOC/Point EVS # Alarm		QA	Emergency #	QANN0E0000	1	220 + Emergency #	00	000
LOC/Point EVS # Alarm Restore		QH	Emergency #	QHNN0E0000	3	220 + Emergency #	00	000
Manual pull switch alarm		FA	Zone #	FANN000ZZZ	1	115	00	Zone #
Manual pull switch alarm restore		FH	Zone #	FHNN000ZZZ	3	115	00	Zone #
Manual pull switch trouble		FT	Zone #	FTNN000ZZZ	1	373	00	Zone #
Manual pull switch trouble restore		FJ	Zone #	FJNN000ZZZ	3	373	00	Zone #
Notification output trouble		FT	Group # + 1000	FTNN001GGG	1	320	00	Group #
Notification output trouble restore		FJ	Group # + 1000	FJNN001GGG	3	320	00	Group #
Positive Alarm Sequence acknowledge switch trouble		FT	Zone #	FTNN000ZZZ	1	373	00	Zone #
Positive Alarm Sequence acknowledge switch trouble restore		FJ	Zone #	FJNN000ZZZ	3	373	00	Zone #
SLC LED Module trouble		ET	0000	ETNN000000	1	333	00	000
SLC LED Module trouble restore		ER	0000	ERNN000000	3	333	00	000
Status Point Types Trouble		UT	0	UTNN000000	1	379	00	000
Status Point Types Trouble Restore		UJ	0	UJNN000000	3	379	00	000
Supervisory Detector Alarm		FS	Zone #	FSNN000ZZZ	1	200	00	Zone #
Supervisory Detector Alarm Restore		FR	Zone #	FRNN000ZZZ	3	200	00	Zone #
Supervisory/Tamper Alarm		FS	Zone #	FSNN000ZZZ	1	200	00	Zone #
Supervisory/Tamper alarm condition restore		FR	Zone #	FRNN000ZZZ	3	200	00	Zone #
Supervisory/Tamper switch trouble		FT	Zone #	FTNN000ZZZ	1	373	00	Zone #
Supervisory/Tamper switch trouble restore		FJ	Zone #	FJNN000ZZZ	3	373	00	Zone #
System-based AUX1 switch alarm		UA	1000	UANN001000	1	140	01	000
System-based AUX1 switch alarm restore		UH	1000	UHNN001000	3	140	01	000
System-based AUX1 switch trouble		UT	1000	UTNN001000	1	373	01	000
System-based AUX1 switch trouble restore		UJ	1000	UJNN001000	3	373	01	000
System-based AUX2 switch alarm		UA	2000	UANN002000	1	140	02	000
System-based AUX2 switch alarm restore		UH	2000	UHNN002000	3	140	02	000
System-based AUX2 switch trouble		UT	2000	UTNN002000	1	373	02	000
System-based AUX2 switch trouble restore		UJ	2000	UJNN002000	3	373	02	000
Voice Aux EVS 1 Alarm		UA	3	UANN003000	1	171	00	000
Voice Aux EVS 1 Alarm Restore		UH	3	UHNN003000	3	171	00	000
Voice Aux EVS 2 Alarm		UA	4	UANN004000	1	172	00	000
Voice Aux EVS 2 Alarm Restore		UH	4	UHNN004000	3	172	00	000
Voice Aux EVS 3 Alarm		UA	5	UANN005000	1	173	00	000
Voice Aux EVS 3 Alarm Restore		UH	5	UHNN005000	3	173	00	000
Voice Aux EVS 4 Alarm		UA	6	UANN006000	1	174	00	000

Table 10.2 Report Formats Table (Continued)

	SIA Reporting Format				Contact ID Reporting Format			
	SIA pi Modifier			SIA				
Event Description	Module ID # (If Any)	SIA Event Codes	Parameter	Fixed Length Format NN - panel ID XX- SBUS ID ZZZ- Zone # PPPP- Point # GGG- Group # E- Emergency # RRRR-Receiver #	Qualifier	Event Code	Group #	Contact #
Voice Aux EVS 4 Alarm Restore		UH	6	UHNN006000	3	174	00	000
Water flow switch alarm		SA	Zone #	SANN000ZZZ	1	113	00	Zone #
Water flow switch alarm Restore		SH	Zone #	SHNN000ZZZ	3	113	00	Zone #
Water flow switch trouble		ST	Zone #	STNN000ZZZ	1	373	00	Zone #
Water flow switch trouble Restore		SJ	Zone #	SJNN000ZZZ	3	373	00	Zone #
Zone-based AUX1 switch alarm		UA	Zone # + 1000	UANN001ZZZ	1	140	01	Zone #
Zone-based AUX1 switch alarm restore		UH	Zone # + 1000	UHNN001ZZZ	3	140	01	Zone #
Zone-based AUX1 switch trouble		UT	Zone # + 1000	UTNN001ZZZ	1	373	01	Zone #
Zone-based AUX1 switch trouble restore		UJ	Zone # + 1000	UJNN001ZZZ	3	373	01	Zone #
Zone-based AUX2 switch alarm		UA	Zone # + 2000	UANN002ZZZ	1	140	02	Zone #
Zone-based AUX2 switch alarm restore		UH	Zone # + 2000	UHNN002ZZZ	3	140	02	Zone #
Zone-based AUX2 switch trouble		UT	Zone # + 2000	UTNN002ZZZ	1	373	02	Zone #
Zone-based AUX2 switch trouble restore		UJ	Zone # + 2000	UJNN002ZZZ	3	373	02	Zone #
Point Events	**For SK devices, sensors 1–159 are reported as Points 1–159, modules 1–159 are reported as Points 201–359.**							
An unexpected SLC device has been detected	pi Exp. ID	XE	Point #	XENNXXPPPP	1	380	Exp. ID	Point #
An unexpected SLC device has been removed	pi Exp. ID	XI	Point #	XINNXXPPPP	3	380	Exp. ID	Point #
Auxiliary power disabled	pi Exp. ID	FB	Point #	FBNNXXPPPP	1	571	Exp. ID	Point #
Auxiliary power enabled	pi Exp. ID	FU	Point #	FUNNXXPPPP	3	571	Exp. ID	Point #
Auxiliary power Trouble	pi Exp. ID	FT	Point #	FTNNXXPPPP	1	320	Exp. ID	Point #
Auxiliary power trouble restore	pi Exp. ID	FJ	Point #	FJNNXXPPPP	3	320	Exp. ID	Point #
Background Music Switch is Trouble	pi Exp. ID	UT	Point #	UTNNXXPPPP	1	379	Exp. ID	Point #
Background Music Switch is Trouble Restored	pi Exp. ID	UJ	Point #	UJNNXXPPPP	3	379	Exp. ID	Point #
Background Music Switch is Disabled	pi Exp. ID	UB	Point #	UBNNXXPPPP	1	580	Exp. ID	Point #
Background Music Switch is Enabled	pi Exp. ID	UU	Point #	UUNNXXPPPP	3	580	Exp. ID	Point #
CO Detector Trouble	pi Exp. ID	GT	Point #	GTNNXXPPPP	1	373	Exp. ID	Point #
CO Detector Trouble Restore	pi Exp. ID	GJ	Point #	GJNNXXPPPP	3	373	Exp. ID	Point #
CO Detector Disabled	pi Exp. ID	GB	Point #	GBNNXXPPPP	1	571	Exp. ID	Point #
CO Detector Enabled	pi Exp. ID	GU	Point #	GUNNXXPPPP	3	571	Exp. ID	Point #
Detector Alarm	pi Exp. ID	FA	Point #	FANNXXPPPP	1	110	Exp. ID	Point #
Detector Alarm restore	pi Exp. ID	FH	Point #	FHNNXXPPPP	3	110	Exp. ID	Point #
Detector Disabled	pi Exp. ID	FB	Point #	FBNNXXPPPP	1	571	Exp. ID	Point #
Detector Enabled	pi Exp. ID	FU	Point #	FUNNXXPPPP	3	571	Exp. ID	Point #
Detector Trouble	pi Exp. ID	FT	Point #	FTNNXXPPPP	1	373	Exp. ID	Point #
Detector Trouble restore	pi Exp. ID	FJ	Point #	FJNNXXPPPP	3	373	Exp. ID	Point #
Detector CO Alarm	pi Exp. ID	GA	Point #	GANNXXPPPP	1	162	Exp. ID	Point #
Detector CO Alarm Restore	pi Exp. ID	GH	Point #	GHNNXXPPPP	3	162	Exp. ID	Point #
Detector CO Supervisory Alarm	pi Exp. ID	GS	Point #	GSNNXXPPPP	1	200	Exp. ID	Point #
Detector CO Supervisory Alarm Restore	pi Exp. ID	GR	Point #	GRNNXXPPPP	3	200	Exp. ID	Point #

Table 10.2 Report Formats Table (Continued)

	SIA Reporting Format				Contact ID Reporting Format			
	SIA pi Modifier			SIA				
Event Description	Module ID # (If Any)	SIA Event Codes	Parameter	Fixed Length Format NN - panel ID XX- SBUS ID ZZZ- Zone # PPPP- Point # GGG- Group # E- Emergency # RRRR-Receiver #	Qualifier	Event Code	Group #	Contact #
EVSEVS Alarm # Point Alarm	pi Exp. ID	QA	(EPPP) E - Emergency # PPP - Point #	QANNXXEPPP	1	220 + Emergency #	Exp. ID	Point #
EVSEVS Alarm # Point Alarm Restore	pi Exp. ID	QH	(EPPP) E - Emergency # PPP - Point #	QHNNXXEPPP	3	220 + Emergency #	Exp. ID	Point #
EVSEVS Alarm # Point Trouble	pi Exp. ID	QT	Point #	QTNNXXPPPP	1	242	Exp. ID	Point #
EVSEVS Alarm # Point Trouble Restore	pi Exp. ID	QJ	Point #	QJNNXXPPPP	3	242	Exp. ID	Point #
EVSEVS Alarm # Point Disabled	pi Exp. ID	QB	Point #	QBNNXXPPPP	1	243	Exp. ID	Point #
EVSEVS Alarm # Point Enabled	pi Exp. ID	QU	Point #	QUNNXXPPPP	3	243	Exp. ID	Point #
EVSEVS Supervisory/Tamper Alarm	pi Exp. ID	QS	Point #	QSNNXXPPPP	1	241	Exp. ID	Point #
EVSEVS Supervisory/Tamper Alarm Restore	pi Exp. ID	QR	Point #	QRNNXXPPPP	3	241	Exp. ID	Point #
EVSEVS Supervisory/Tamper Trouble	pi Exp. ID	QT	Point #	QTNNXXPPPP	1	242	Exp. ID	Point #
EVSEVS Supervisory/Tamper Trouble Restore	pi Exp. ID	QJ	Point #	QJNNXXPPPP	3	242	Exp. ID	Point #
EVSEVS Supervisory/Tamper Disabled	pi Exp. ID	QB	Point #	QBNNXXPPPP	1	243	Exp. ID	Point #
EVSEVS Supervisory/Tamper Enabled	pi Exp. ID	QU	Point #	QUNNXXPPPP	3	243	Exp. ID	Point #
EVSEVS NAC Trouble	pi Exp. ID	QT	Point #	QTNNXXPPPP	1	320	Exp. ID	Point #
EVSEVS NAC Trouble Restored	pi Exp. ID	QJ	Point #	QJNNXXPPPP	3	320	Exp. ID	Point #
EVSEVS Control Circuit Trouble	pi Exp. ID	QT	Point #	QTNNXXPPPP	1	320	Exp. ID	Point #
EVSEVS Control Circuit Trouble Restored	pi Exp. ID	QJ	Point #	QJNNXXPPPP	3	320	Exp. ID	Point #
EVS Relay Trouble	pi Exp. ID	QT	Point #	QTNNXXPPPP	1	320	Exp. ID	Point #
EVS Relay Trouble Restored	pi Exp. ID	QJ	Point #	QJNNXXPPPP	3	320	Exp. ID	Point #
EVS Notification Trouble	pi Exp. ID	QT	Point #	QTNNXXPPPP	1	320	Exp. ID	Point #
EVS Notification Trouble Restored	pi Exp. ID	QJ	Point #	QJNNXXPPPP	3	320	Exp. ID	Point #
External Reset/Silence/Fire Drill switch disabled	pi Exp. ID	UB	Point #	UBNNXXPPPP	1	571	Exp. ID	Point #
External Reset/Silence/Fire Drill switch enabled	pi Exp. ID	UU	Point #	UUNNXXPPPP	3	571	Exp. ID	Point #
External Reset/Silence/Fire Drill switch trouble	pi Exp. ID	UT	Point #	UTNNXXPPPP	1	373	Exp. ID	Point #
External Reset/Silence/Fire Drill switch trouble restore	pi Exp. ID	UJ	Point #	UJNNXXPPPP	3	373	Exp. ID	Point #
Interlock switch alarm (Water Release Zone)	pi Exp. ID	FA	Point #	FANNXXPPPP	1	110	Exp. ID	Point #
Interlock switch alarm restore (Water Release Zone)	pi Exp. ID	FH	Point #	FHNNXXPPPP	3	110	Exp. ID	Point #
Interlock switch disabled	pi Exp. ID	FB	Point #	FBNNXXPPPP	1	571	Exp. ID	Point #
Interlock switch enabled	pi Exp. ID	FU	Point #	FUNNXXPPPP	3	571	Exp. ID	Point #
Interlock switch trouble (Water Release Zone)	pi Exp. ID	FT	Point #	FTNNXXPPPP	1	373	Exp. ID	Point #
Interlock switch trouble restore (Water Release Zone)	pi Exp. ID	FJ	Point #	FJNNXXPPPP	3	373	Exp. ID	Point #
LOC Mic Activated EVS Alarm	pi Exp. ID	QA	0	QANNXX0000	1	220	Exp. ID	000

Table 10.2 Report Formats Table (Continued)

	SIA Reporting Format				Contact ID Reporting Format			
	SIA pi Modifier			SIA				
Event Description	Module ID # (If Any)	SIA Event Code s	Parameter	Fixed Length Format NN - panel ID XX- SBUS ID ZZZ- Zone # PPPP- Point # GGG- Group # E- Emergency # RRRR-Receiver #	Qualifier	Event Code	Group #	Contact #
LOC Mic Activated EVS Alarm Restore	pi Exp. ID	QH	0	QHNNXX0000	3	220	Exp. ID	000
LOC EVS # Alarm	pi Exp. ID	QA	Emergency #	QANNXXE000	1	220 + Emergen cy #	Exp. ID	000
LOC EVS # Alarm Restore	pi Exp. ID	QH	Emergency #	QHNNXXE000	3	220 + Emergen cy #	Exp. ID	000
Manual pull switch alarm	pi Exp. ID	FA	Point #	FANNXXPPPP	1	115	Exp. ID	Point #
Manual pull switch alarm restore	pi Exp. ID	FH	Point #	FHNNXXPPPP	3	115	Exp. ID	Point #
Manual pull switch disabled	pi Exp. ID	FB	Point #	FBNNXXPPPP	1	571	Exp. ID	Point #
Manual pull switch enabled	pi Exp. ID	FU	Point #	FUNNXXPPPP	3	571	Exp. ID	Point #
Manual pull switch trouble	pi Exp. ID	FT	Point #	FTNNXXPPPP	1	373	Exp. ID	Point #
Manual pull switch trouble restore	pi Exp. ID	FJ	Point #	FJNNXXPPPP	3	373	Exp. ID	Point #
Manual release switch alarm (Water Release Zone)	pi Exp. ID	FA	Point #	FANNXXPPPP	1	110	Exp. ID	Point #
Manual release switch alarm restore (Water Release Zone)	pi Exp. ID	FH	Point #	FHNNXXPPPP	3	110	Exp. ID	Point #
Manual release switch disabled	pi Exp. ID	FB	Point #	FBNNXXPPPP	1	571	Exp. ID	Point #
Manual release switch enabled	pi Exp. ID	FU	Point #	FUNNXXPPPP	3	571	Exp. ID	Point #
Manual release switch trouble (Water Release Zone)	pi Exp. ID	FT	Point #	FTNNXXPPPP	1	373	Exp. ID	Point #
Manual release switch trouble restore (Water Release Zone)	pi Exp. ID	FJ	Point #	FJNNXXPPPP	3	373	Exp. ID	Point #
Notification output point disabled	pi Exp. ID	FB	Point #	FBNNXXPPPP	1	571	Exp. ID	Point #
Notification output point enabled	pi Exp. ID	FU	Point #	FUNNXXPPPP	3	571	Exp. ID	Point #
Notification output point trouble	pi Exp. ID	FT	Point #	FTNNXXPPPP	1	320	Exp. ID	Point #
Notification output point trouble restore	pi Exp. ID	FJ	Point #	FJNNXXPPPP	3	320	Exp. ID	Point #
Positive Alarm Sequence acknowledge switch disabled	pi Exp. ID	FB	Point #	FBNNXXPPPP	1	571	Exp. ID	Point #
Positive Alarm Sequence acknowledge switch enabled	pi Exp. ID	FU	Point #	FUNNXXPPPP	3	571	Exp. ID	Point #
Positive Alarm Sequence acknowledge switch trouble	pi Exp. ID	FT	Point #	FTNNXXPPPP	1	373	Exp. ID	Point #
Positive Alarm Sequence acknowledge switch trouble restore	pi Exp. ID	FJ	Point #	FJNNXXPPPP	3	373	Exp. ID	Point #
Status Point Trouble	pi Exp. ID	UT	Point #	UTNNXXPPPP	1	379	Exp. ID	Point #
Status Point Trouble Restored	pi Exp. ID	UJ	Point #	UJNNXXPPPP	3	379	Exp. ID	Point #
Status Point is Disabled	pi Exp. ID	UB	Point #	UBNNXXPPPP	1	580	Exp. ID	Point #
Status Point is Enabled	pi Exp. ID	UU	Point #	UUNNXXPPPP	3	580	Exp. ID	Point #
Supervisory/Tamper Alarm	pi Exp. ID	FS	Point #	FSNNXXPPPP	1	200	Exp. ID	Point #
Supervisory/Tamper Alarm Restore	pi Exp. ID	FR	Point #	FRNNXXPPPP	3	200	Exp. ID	Point #
Supervisory/Tamper point disabled	pi Exp. ID	FB	Point #	FBNNXXPPPP	1	571	Exp. ID	Point #
Supervisory/Tamper point enabled	pi Exp. ID	FU	Point #	FUNNXXPPPP	3	571	Exp. ID	Point #
Supervisory/Tamper point trouble	pi Exp. ID	FT	Point #	FTNNXXPPPP	1	373	Exp. ID	Point #

Table 10.2 Report Formats Table (Continued)

	SIA Reporting Format				Contact ID Reporting Format			
	SIA pi Modifier			SIA				
Event Description	Module ID # (If Any)	SIA Event Codes	Parameter	Fixed Length Format NN - panel ID XX- SBUS ID ZZZ- Zone # PPPP- Point # GGG- Group # E- Emergency # RRRR-Receiver #	Qualifier	Event Code	Group #	Contact #
Supervisory/Tamper point trouble restore	pi Exp. ID	FJ	Point #	FJNNXXPPPP	3	373	Exp. ID	Point #
System-based AUX1 switch alarm	pi Exp. ID	UA	Point #	UANNXXPPPP	1	140	Exp. ID	Point #
System-based AUX1 switch alarm restore	pi Exp. ID	UH	Point #	UHNNXXPPPP	3	140	Exp. ID	Point #
System-based AUX1 switch disabled	pi Exp. ID	UB	Point #	UBNNXXPPPP	1	571	Exp. ID	Point #
System-based AUX1 switch enabled	pi Exp. ID	UU	Point #	UUNNXXPPPP	3	571	Exp. ID	Point #
System-based AUX1 switch trouble	pi Exp. ID	UT	Point #	UTNNXXPPPP	1	373	Exp. ID	Point #
System-based AUX1 switch trouble restore	pi Exp. ID	UJ	Point #	UJNNXXPPPP	3	373	Exp. ID	Point #
System-based AUX2 switch alarm	pi Exp. ID	UA	Point #	UANNXXPPPP	1	140	Exp. ID	Point #
System-based AUX2 switch alarm restore	pi Exp. ID	UH	Point #	UHNNXXPPPP	3	140	Exp. ID	Point #
System-based AUX2 switch disabled	pi Exp. ID	UB	Point #	UBNNXXPPPP	1	571	Exp. ID	Point #
System-based AUX2 switch enabled	pi Exp. ID	UU	Point #	UUNNXXPPPP	3	571	Exp. ID	Point #
System-based AUX2 switch trouble	pi Exp. ID	UT	Point #	UTNNXXPPPP	1	373	Exp. ID	Point #
System-based AUX2 switch trouble restore	pi Exp. ID	UJ	Point #	UJNNXXPPPP	3	373	Exp. ID	Point #
Voice Aux EVS 1 Point Alarm	pi Exp. ID	UA	(3PPP) PPP - Point #	UANNXX3PPP	1	171	Exp. ID	Point #
Voice Aux EVS 1 Point Alarm Restore	pi Exp. ID	UH	(3PPP) PPP - Point #	UHNNXX3PPP	3	171	Exp. ID	Point #
Voice Aux EVS 2 Point Alarm	pi Exp. ID	UA	(4PPP) PPP - Point #	UANNXX4PPP	1	172	Exp. ID	Point #
Voice Aux EVS 2 Point Alarm Restore	pi Exp. ID	UH	(4PPP) PPP - Point #	UHNNXX4PPP	3	172	Exp. ID	Point #
Voice Aux EVS 3 Point Alarm	pi Exp. ID	UA	(5PPP) PPP - Point #	UANNXX5PPP	1	173	Exp. ID	Point #
Voice Aux EVS 3 Point Alarm Restore	pi Exp. ID	UH	(5PPP) PPP - Point #	UHNNXX5PPP	3	173	Exp. ID	Point #
Voice Aux EVS 4 Point Alarm	pi Exp. ID	UA	(6PPP) PPP - Point #	UANNXX6PPP	1	174	Exp. ID	Point #
Voice Aux EVS 4 Point Alarm Restore	pi Exp. ID	UH	(6PPP) PPP - Point #	UHNNXX6PPP	3	174	Exp. ID	Point #
Voice Aux EVS Point Trouble	pi Exp. ID	UT	Point #	UTNNXXPPPP	1	379	Exp. ID	Point #
Voice Aux EVS Point Trouble Restore	pi Exp. ID	UJ	Point #	UJNNXXPPPP	3	379	Exp. ID	Point #
Voice Aux EVS Point Disabled	pi Exp. ID	UB	Point #	UBNNXXPPPP	1	580	Exp. ID	Point #
Voice Aux EVS Point Enabled	pi Exp. ID	UU	Point #	UUNNXXPPPP	3	580	Exp. ID	Point #
Voice Aux Status 1 Switch is Trouble	pi Exp. ID	UT	Point #	UTNNXXPPPP	1	379	Exp. ID	Point #
Voice Aux Status 1 Switch is Trouble Restored	pi Exp. ID	UJ	Point #	UJNNXXPPPP	3	379	Exp. ID	Point #
Voice Aux Status 1 Switch is Disabled	pi Exp. ID	UB	Point #	UBNXXPPPP	1	580	Exp. ID	Point #
Voice Aux Status 1 Switch is Enabled	pi Exp. ID	UU	Point #	UUNXXPPPP	3	580	Exp. ID	Point #
Voice Aux Status 2 Switch is Trouble	pi Exp. ID	UT	Point #	UTNNXXPPPP	1	379	Exp. ID	Point #
Voice Aux Status 2 Switch is Trouble Restored	pi Exp. ID	UJ	Point #	UJNNXXPPPP	3	379	Exp. ID	Point #
Voice Aux Status 2 Switch is Disabled	pi Exp. ID	UB	Point #	UBNNXXPPPP	1	580	Exp. ID	Point #
Voice Aux Status 2 Switch is Enabled	pi Exp. ID	UU	Point #	UUNNXXPPPP	3	580	Exp. ID	Point #
Water flow switch alarm	pi Exp. ID	SA	Point #	SANNXXPPPP	1	113	Exp. ID	Point #
Water flow switch alarm restore	pi Exp. ID	SH	Point #	SHNNXXPPPP	3	113	Exp. ID	Point #
Water flow switch disabled	pi Exp. ID	SB	Point #	SBNNXXPPPP	1	571	Exp. ID	Point #
Water flow switch enabled	pi Exp. ID	SU	Point #	SUNNXXPPPP	3	571	Exp. ID	Point #
Water flow switch trouble	pi Exp. ID	ST	Point #	STNNXXPPPP	1	373	Exp. ID	Point #
Water flow switch trouble restore	pi Exp. ID	SJ	Point #	SJNNXXPPPP	3	373	Exp. ID	Point #
Zone-based AUX1 switch alarm	pi Exp. ID	UA	Point #	UANNXXPPPP	1	140	Exp. ID	Point #

Table 10.2 Report Formats Table (Continued)

	SIA Reporting Format				Contact ID Reporting Format			
	SIA pi Modifier			SIA				
Event Description	Module ID # (If Any)	SIA Event Code s	Parameter	Fixed Length Format NN - panel ID XX- SBUS ID ZZZ- Zone # PPPP- Point # GGG- Group # E- Emergency # RRRR-Receiver #	Qualifier	Event Code	Group #	Contact #
Zone-based AUX1 switch alarm restore	pi Exp. ID	UH	Point #	UHNNXXPPPP	3	140	Exp. ID	Point #
Zone-based AUX1 switch disabled	pi Exp. ID	UB	Point #	UBNNXXPPPP	1	571	Exp. ID	Point #
Zone-based AUX1 switch enabled	pi Exp. ID	UU	Point #	UUNNXXPPPP	3	571	Exp. ID	Point #
Zone-based AUX1 switch trouble	pi Exp. ID	UT	Point #	UTNNXXPPPP	1	373	Exp. ID	Point #
Zone-based AUX1 switch trouble restore	pi Exp. ID	UJ	Point #	UJNNXXPPPP	3	373	Exp. ID	Point #
Zone-based AUX2 switch alarm	pi Exp. ID	UA	Point #	UANNXXPPPP	1	140	Exp. ID	Point #
Zone-based AUX2 switch alarm restore	pi Exp. ID	UH	Point #	UHNNXXPPPP	3	140	Exp. ID	Point #
Zone-based AUX2 switch disabled	pi Exp. ID	UB	Point #	UBNNXXPPPP	1	571	Exp. ID	Point #
Zone-based AUX2 switch enabled	pi Exp. ID	UU	Point #	UUNNXXPPPP	3	571	Exp. ID	Point #
Zone-based AUX2 switch trouble	pi Exp. ID	UT	Point #	UTNNXXPPPP	1	373	Exp. ID	Point #
Zone-based AUX2 switch trouble restore	pi Exp. ID	UJ	Point #	UJNNXXPPPP	3	373	Exp. ID	Point #
System-based Wireless Gateway Trouble	pi Exp. ID	UT	Point #	UTNNXXPPPP	1	373	Exp. ID	Point #
System-based Wireless Gateway Trouble - restore	pi Exp. ID	UJ	Point #	UJNNXXPPPP	3	373	Exp. ID	Point #
Wireless Gateway Trouble	pi Exp. ID	UT	Point #	UTNNXXPPPP	1	373	Exp. ID	Point #
Wireless Gateway Trouble restore	pi Exp. ID	UJ	Point #	UJNNXXPPPP	3	373	Exp. ID	Point #

Table 10.2 Report Formats Table (Continued)

10.2 SIA - Panels PI Modifier Reporting

Events are sent to the Central Station as a variable length string.

The event format is:

EEZZZZ

Where:

EE Event code (2 characters)

ZZZZ Event parameter (up to four digits – not zero filled)

1. The account number is sent using an account block that is separate from the event block
2. Multiple events can be sent within a single event block. Events are separated by a "/" character.
3. Event parameter can be either a zone, point or module number.
4. When reporting by point is enabled, the communicator uses a "pi" event to supersedes the actual point event to report the module the point is linked to.
5. Panel ID is not sent in the SIA event parameters.

For Example see Table 10.3:

Event	Report Zone/ Point	Panel ID	Module	Zone ZZZZ	Point ZZZZ	Fields Sent	SIA Event Data
Fire Alarm-Zone	Zone	n/a	n/a97	15	n/a	EE-ZZ	FA15
Fire Alarm-Zone	Zone	n/a	n/a	05	n/a	EE-Z	FA5
Fire Alarm-Point	Point	n/a	01	n/a	123	EE-ZZ /EE-ZZZ	pi01/FA123
Fire Alarm-Point	Point	n/a	33	n/a	203	EE-ZZ /EE-ZZZ	pi11/FA203
Expander Trouble	n/a	n/a	11	n/a	n/a	EE-ZZ	ET11
Auto Test	n/a	n/a	n/a	n/a	n/a	EE-Z	RP0
Battery Trouble-Panel 32	n/a	n/a	98	n/a	n/a	EE-ZZ	YT98
Battery Trouble-Expander 18	n/a	n/a	18	n/a	n/a	EE-ZZ	YT18
SLC Loop Shorted	n/a	n/a	44	n/a	n/a	EE-ZZ	ET44
Program Begin Panel ID=32	n/a	n/a	n/a	n/a	n/a	EE-Z	LB0
Program Begin Panel ID= 22	n/a	n/a	n/a	n/a	n/a	EE-Z	LB0
AC Power Loss - Panel 22	n/a	n/a	98	n/a	n/a	EE-Z	AT0
Fire Trouble	Point	n/a	97	n/a	200	EE-ZZ /EE-ZZZ	pi97/FT200
Fire Trouble	Zone	n/a	97	01	n/a	EE-Z	FT1
Fire Trouble-NAC	Point	n/a	98	n/a	Nac Circuit 7	EE-ZZ /EE-Z	pi98/FT7 Z=Pt. #
Fire Trouble-NAC	Zone	n/a	98	n/a	Nac Circuit 7	EE-ZZZ	FT400 ZZZ=OPG#

Table 10.3 SIA / Panels - PI Modifier Reporting Examples

10.3 SIA – Panel Communicator

(The differences/additional features are underlined).

Events are sent to the Central Station Receiver as a fixed length string.

The event format is:

EEPPMMZZZZ

Where

EE Event code (2 characters)

PP Panel number (2 digits – Zero Filled) (valid range from 1 to 64)

MM Module number (2 digits – Zero Filled) (valid range from 1 to 98, typically Module information)

ZZZZ Event parameter (4 digits – Zero Filled) (typically Point, Zone or Circuit information)

1. The Event field will contain 10 digits including the 2 digit event code (EE), 2 digit panel ID (PP), 2 digit Module Number (MM) and a 4 digit Event Parameter (ZZZZ).
2. Based on the actual Event Code, the Module Number or Event Parameter fields might not contain pertinent information. In that case the field will contain zeros.
3. The account number is sent using an account block that is separate from the event block.
4. Multiple events can be sent within a single event block. Events are separated by a "/" character.
5. Event parameter can be a Zone, Point or Circuit Number.
6. "pi" modifier event is not used.
7. Panel can be set to report by either Point or Zone.

For examples see Table 10.4.

Event	Report Zone/Point	Panel ID PP	Module MM	Zone ZZZZ	Point ZZZZ	Fields Sent	SIA Event Data
Fire Alarm-Zone	Zone	32	n/a	15	n/a	EE-PP-MM-ZZZZ	FA32000015
Fire Alarm-Zone	Zone	32	n/a	05	n/a	EE-PP-MM-ZZZZ	FA32000005
Fire Alarm-Point	Point	32	01	n/a	123	EE-PP-MM-ZZZZ	FA32010123
Fire Alarm-Point	Point	21	33	n/a	203	EE-PP-MM-ZZZZ	FA21330203
Expander Trouble	n/a	15	11	n/a	n/a	EE-PP-MM-ZZZZ	ET15110000
Auto Test	n/a	32	n/a	n/a	n/a	EE-PP-MM-ZZZZ	RP32000000
Battery Trouble-Panel 32	n/a	32	98	n/a	n/a	EE-PP-MM-ZZZZ	YT32980000
Battery Trouble-Expander 18	n/a	32	18	n/a	n/a	EE-PP-MM-ZZZZ	YT32180000
SLC Loop Shorted	n/a	01	44	n/a	n/a	EE-PP-MM-ZZZZ	ET01440000
Program Begin	n/a	32	n/a	n/a	n/a	EE-PP-MM-ZZZZ	LB32000000
Program Begin	n/a	22	n/a	n/a	n/a	EE-PP-MM-ZZZZ	LB22000000
AC Power Loss- Panel 22	n/a	22	98	n/a	n/a	EE-PP-MM-ZZZZ	AT22980000 MM = 00
Fire Trouble	Point	22	97	n/a	200	EE-PP-MM-ZZZZ	FT22970200
Fire Trouble	Zone	22	97	1	n/a	EE-PP-MM-ZZZZ	FT22970001 MM = 00
Fire Trouble-NAC	Point	22	98	n/a	NAC Circuit 7	EE-PP-MM-ZZZZ	FT22980007 ZZZZ=Pt. #
Fire Trouble-NAC	Zone	22	98	n/a	NAC Circuit 7	EE-PP-MM-ZZZZ	FT22980007 ZZZZ=OPG #

Table 10.4 SIA Reporting Examples

Section 11: Testing and Troubleshooting

11.1 Troubleshooting

This Section of the Manual offers suggestions for troubleshooting hardware problems. Please read this section if you encounter a problem when installing the control panel. If these suggestions do not solve your problem or if you encounter a problem that is not listed here, contact Silent Knight Technical Support at 800.446.6444 for assistance.

11.1.1 Common Problems

Problem	Possible Cause / Suggested Actions
Trouble message “DBL ADDR” (Double Address) displays on LCD.	An address has been assigned to more than one detector. Correct the address following the procedure described for SK and SD devices in the *SLC Wiring Manual*.
Auxiliary power or notification circuits have incorrect polarity.	Correct polarity. For notification and auxiliary power circuits: When in alarm or powered, terminals labeled “X” are positive, terminals labeled “O” are negative.
SLC devices are not being recognized (trouble message “Missing” displays).	Check hardware connections. If devices are physically connected, make sure the wiring is correct. Refer to the *SLC Wiring Manual*. For the main panel, the positive side of device must be connected to terminal 34; the negative side must be connected to Terminal 33. For SLC devices, make sure the device connects to the SLC loop via the SLC OUT terminals.
	Make sure SLC devices have been addressed properly.For information on device addressing, refer to the *SLC Wiring Manual*. For contact monitor modules, which are addressed using DIP switches, the DIP switch must be set to the correct address before power is applied to the SLC loop. If this procedure is not followed, the device will have an incorrect address.
	Make sure correct polarity has been observed for SLC device wiring. For information on wiring, refer to the *SLC Wiring Manual*.
SLC devices are not being recognized (trouble message “Missing” displays on the annunciator).	Check that SLC loop impedance is within the required range. To measure impedance, use the following procedure. 1. Disconnect both wires from the terminal block at the panel (SLC devices can remain connected). 2. Measure the impedance from positive to negative and from negative to positive. Both measurements should be greater than 500 K ohms. If the installation uses T-taps, test each T-tap individually. 3. Temporarily connect the positive wire to the negative wire of the SLC loop at the point farthest from the panel (SLC devices can remain connected). 4. Measure the impedance from positive to negative and from negative to positive. Both measurements must be less than 50 ohms.
The panel indicates a ground fault trouble condition (trouble message “GROUND FAULT” displays).	An earth ground fault occurs when the panel senses an unexpected flow of current from one or more of its terminals to the earth connection (Terminal 2). Isolate the wiring that is causing the fault by removing wiring connections one at a time until the earth fault is no longer present. Pause at least five seconds after removing a wire before removing the next one. The panel will also go into ground fault if a computer is connected to the panel via a serial cable attached to the panel’s 9-pin connector or a USB cable. This is a correct method for on-site communication between a panel and a computer. Ignore the ground fault message in this case. The trouble will clear automatically when you disconnect the computer from the cable
5496, 6815, or 5815XL module that has been physically connected to the panel but is not being recognized.	Check the status of the module’s green LED. If it flashes in the pattern half second on/ half second off, it is likely that the device has not been added to the system through programming. JumpStart will add any modules connected to the panel. If you have already run JumpStart, modules can be added manually. (Refer to Section 8.2.2). Check that the correct ID for the module has been set through the DIP switches. Assign ID#1 to the first module and ID#2 to the second. If the wiring between the device and the panel is correct, measure the voltage from the Terminal (+) to Terminal (-). Voltage should be in the range 27.2-27.4V when AC power is present. If the green LED is not flashing, the likely cause is incorrect wiring from between the device and the panel.

Table 11.1 Troubleshooting Chart

11.2 Periodic Testing and Maintenance

To ensure proper and reliable operation, it is recommended that system inspection and testing be scheduled monthly or as required by national and/or local fire codes. Testing should be done by a qualified service representative if a malfunction is encountered.

Before Testing

1. Notify the fire department and/or central alarm receiving station if an alarm condition is transmitted.
2. Notify facility personnel of a test so that alarm sounding devices are ignored during the test period.

Testing

1. Rotate the key or enter a code to access the Main menu.

2. Press 1 for System Test.
3. Press 1 to select Fire Drill.
4. Press ENTER to begin the drill. To end the drill, press any key.

To conduct a fire drill from a remote fire drill switch: Activate the switch to begin the drill; de-activate the switch to end the drill. Measure battery voltage while the Notification Appliances are sounding. Replace any battery with terminal voltage less then 85% of rating. Reapply AC power and press RESET. Return all switches to their normal outward positions. Notify fire department, central station and/or building personnel that the test is complete.

11.3 Event History

The Event History can be useful for tracking or recalling a trouble condition.

To view the Event History, do the following.

1. Login to the panel.
2. Press 3 to select Event History.
3. Press the up or down arrow key to view events in the history buffer.

11.4 Built-in Troubleshooting and Testing Tools

The fire control panel has several built-in testing and troubleshooting tools that can be utilized to save time while testing and troubleshooting points and SLC devices.

11.4.1 SLC Device Locater

SLC device locater can be used to locate a device on a SLC loop.

Follow these steps to locate a particular SLC device:

1. Select 2 for Point Functions from the Main Menu.
2. Select 4 for SLC Single Device Locater.
   A message similar to the one shown below will display.

```
System will be shut
down during SLC
device locating:
Continue? NO
```

Figure 11.1 Shut Down Warning

3. Press the up or down arrow to toggle NO to YES then press ENTER.
   If NO is chosen you will exit back to the Point Function menu.
   If Yes is chosen the system will cease normal operation leaving the premise unprotected.
4. Select the SLC loop.
5. Enter the SLC address of the device you wish to locate.
   The LED on the selected device will start flashing.
6. Press left arrow key to exit the SLC Device Locater.

NOTE: Once you exit, the system will resume normal operation.

11.4.2 SLC Multiple Device Locater

This feature is the same as SLC Single Device Locater, except you can locate up to 8 devices on a single search.

Follow these instructions to locate multiple SLC devices:

1. Select 2 for Point Functions from the Main Menu.
2. Select 5 for SLC Multiple Device Locater.
   A message similar to the one shown below will display.

```
System will be shut
down during SLC
device locating:
Continue? NO
```

Figure 11.2 Shut Down Warning

3. Press the up or down arrow to toggle NO to YES then press ENTER.
   If NO is chosen you will exit back to the Point Function menu.
   If Yes is chosen the system will cease normal operation leaving the premise unprotected.

4. Select the SLC loop.
5. Enter up to eight SLC addresses for the devices you wish to locate.
   The LEDs on the selected devices will start flashing.
6. Press the left arrow key to exit SLC Multiple Device Locater.

NOTE: Once you exit, the system will resume normal operation.

11.4.3 I/O Point Control

This feature allows you to toggle any output on or off and trip any input device. This can be useful to test a point's output mapping. I/O Point Control can only be accessed if enabled in the user profile.

Follow these steps to control an I/O point.

1. Select 2 (Point Functions) from the Main Menu.
2. Select 6 (I/O Point Control).
3. Select the module the point is on.
4. Make any selections specific to the module selected in the previous step.
5. Use the up or down arrow key to select the point you wish to test.
6. Press ENTER to toggle (Active/Inactive) Output.
7. Press the left arrow key to exit.

11.4.4 Earth Fault Resistance

Table 11.2 lists the Earth Fault Resistance detection for each applicable terminal on the FACP. Any wire-to-wire fault impedance is 0 ohms.

Function	Terminal Label (Values in Ohms)		Low Biased		High Biased	
			High Trip	High Restore	Low Trip	Low Restore
Notification Circuits	–	NAC 4	-	-	0	0
	+		0	0	-	-
	–	NAC 3	-	-	0	0
	+		0	0	-	-
	–	NAC 2	-	-	0	0
	+		0	0	-	-
	–	NAC 1	-	-	0	0
	+		0	0	-	-
SBUS OUT	B	SBUS1 OUT	-	-	0	0
	A		-	-	0	0
	+		0	0	-	-
	-		-	-	0	0
EXT. COMM	B		-	-	0	0
	A		-	-	0	0
	+		0	0	-	-
	-		-	-	0	0
SLC Terminals	-	SLC OUT	-	-	0	0
	+		0	0	-	-
	-	SLC IN	-	-	0	0
	+		0	0	-	-
Any wire to wire fault impedance is 0 ohms.						

Table 11.2 Terminals Earth Fault Resistance Values

Section 12: Installation Records

This section of the manual is for you to use if you wish to track how points, zones, and groups have been programmed.

12.1 Detector and Module Point Record

If installing SK SLC devices, use Table 12.1 to record detector points (up to 127 per SLC loop) installed on the onboard SLC loop.

Module	Address	Zone / Group	Description	Module	Address	Zone/ Group	Description
Onboard	1			Onboard	2		
Onboard	3			Onboard	4		
Onboard	5			Onboard	6		
Onboard	7			Onboard	8		
Onboard	9			Onboard	10		
Onboard	11			Onboard	12		
Onboard	13			Onboard	14		
Onboard	15			Onboard	16		
Onboard	17			Onboard	18		
Onboard	19			Onboard	20		
Onboard	21			Onboard	22		
Onboard	23			Onboard	24		
Onboard	25			Onboard	26		
Onboard	27			Onboard	28		
Onboard	29			Onboard	30		
Onboard	31			Onboard	32		
Onboard	33			Onboard	34		
Onboard	35			Onboard	36		
Onboard	37			Onboard	38		
Onboard	39			Onboard	40		
Onboard	41			Onboard	42		
Onboard	43			Onboard	44		
Onboard	45			Onboard	46		
Onboard	47			Onboard	48		
Onboard	49			Onboard	50		
Onboard	51			Onboard	52		
Onboard	53			Onboard	54		
Onboard	55			Onboard	56		
Onboard	57			Onboard	58		
Onboard	59			Onboard	60		
Onboard	61			Onboard	62		
Onboard	63			Onboard	64		
Onboard	65			Onboard	66		
Onboard	67			Onboard	68		
Onboard	69			Onboard	70		
Onboard	71			Onboard	72		
Onboard	73			Onboard	74		
Onboard	75			Onboard	76		
Onboard	77			Onboard	78		
Onboard	79			Onboard	80		
Onboard	81			Onboard	82		
Onboard	83			Onboard	84		
Onboard	85			Onboard	86		
Onboard	87			Onboard	88		
Onboard	89			Onboard	90		

Table 12.1 Installation Record of Onboard Devices

Module	Address	Zone / Group	Description	Module	Address	Zone/ Group	Description
Onboard	91			Onboard	92		
Onboard	93			Onboard	94		
Onboard	95			Onboard	96		
Onboard	97			Onboard	98		
Onboard	99			Onboard	100		
Onboard	101			Onboard	102		
Onboard	103			Onboard	104		
Onboard	105			Onboard	106		
Onboard	107			Onboard	108		
Onboard	109			Onboard	110		
Onboard	111			Onboard	112		
Onboard	113			Onboard	114		
Onboard	115			Onboard	116		
Onboard	117			Onboard	118		
Onboard	119			Onboard	120		
Onboard	121			Onboard	122		
Onboard	123			Onboard	124		
Onboard	125			Onboard	126		
Onboard	127						

Table 12.1 Installation Record of Onboard Devices (Continued)

Appendix A: Editing Text Using the Built-In Programmer

This section contains tables of programmable characters that may be used for device, module, site, template, group, and zone names or phone numbers. T9 style editing is used.

A.1 Characters Used for Editing Text

Table A.1 lists the available characters and their associated numeric designator. When programming:

1. Use the Up or Down arrow key to scroll to the mode wanted.
2. Press the number shown in Table A.1 until the character wanted is shown.
3. Arrow left and right for position, and press enter to accept.

Lower Case Letters			
abc 1	def 2	ghi 3	jkl 4
mno 5	pqr 6	stu 7	vwx 8
yz 9	Spc 0		
Upper Case Letters			
ABC 1	DEF 2	GHI 3	JKL 4
MNO 5	PQR 6	STU 7	VWX 8
YZ 9	Spc 0		
Numbers and Special Characters			
1 [ ] 1	2 ( ) 2	3 . , 3	4 : ; 4
5 ' " 5	6 ? ! 6	7 ' / 7	8 – + 8
9 = - 9	0 0	* & @ *	# $ #

Table A.1 Character Table

A.2 Example Name Edit

1. Press the up or down arrow to select upper case letters mode, Press 2 until “F” appears.
2. Press the up or down arrow to change mode to lower case letters, Press 3 until “i” appears.
3. Press 6 until “r” appears.
4. Press 2 until “e” appears.
5. Press 0 to space, then continue to next word using the same process.
6. Press ENTER to accept.

NOTE: After three seconds of no change, letter will automatically be accepted. Also pressing next number will automatically accept previous choice.

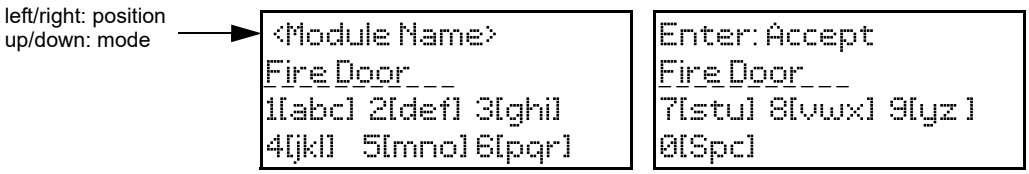

Figure A.1 Edit Name Example

Appendix B: Expanded Receiver/Panel Relationship

The available receiver number will correspond with what panel number you entered. Receiver numbers are populated based on panel number and audited to allow only the four appropriate receivers. See Section 6.

Panel	Available Receiver Numbers			
1	1	2	3	4
2	5	6	7	8
3	9	10	11	12
4	13	14	15	16
5	17	18	19	20
6	21	22	23	24
7	25	26	27	28
8	29	30	31	32
9	33	34	35	36
10	37	38	39	40
11	41	42	43	44
12	45	46	47	48
13	49	50	51	52
14	53	54	55	56
15	57	58	59	60
16	61	62	63	64
17	65	66	67	68

Table B.1 Receiver/panel relationship

Appendix C: Cadence Patterns

Table C.1 shows the cadence patterns available for use with the control panel.

#	Name	Pattern Description (Patterns repeat until condition is cleared.)
00	Constant	Continuous sound (This is the only pattern that can be used for relay circuits. The system will override any other choice.)
01	March Time	0.5 second on, 0.5 second off
02	ANSI 3.41	0.5 sec on, 0.5 sec off, 0.5 sec on, 0.5 sec off, 0.5 sec on, 1.5 sec off
03	Single Stroke	0.1 sec on, 1 sec off, 0.1 sec on, 1 sec off, 0.1 sec on, 3 sec off
04	California	5 sec on, 10 sec off
05	Zone-coded, Zone 1	0.5 sec on, 0.5 sec off This pattern is multiplied by the zone number in alarm, followed by 3 seconds off. For example, Pattern 6, Zone 2 coded: (pattern x two): 0.5 sec on, 0.5 sec off, 0.5 sec on, 0.5 sec off, 3 sec off
06	Zone-coded, Zone 2	
07	Zone-coded, Zone 3	
08	Zone-coded, Zone 4	
09	Zone-coded, Zone 5	
10	Zone-coded, Zone 6	
11	Zone-coded, Zone 7	
12	Zone-coded, Zone 8	
13	Zone-coded, Custom 1	
14	Zone-coded, Custom 2	
15	Zone-coded, Custom 3	
16	Zone-coded, Custom 4	
17	Sync Type- Faraday (N/A)	These outputs provide synchronization for Gentex, System Sensor, Wheelock, or AMESECO synchronized appliances.
18	Sync Type- Gentex	
19	Sync Type- System Sensor	
20	Sync Type- Wheelock	
21	Sync Type- AMSECO	
22	Power Isolated	Disconnected. No voltage at terminals.
23	Temporal 4	0.1 sec on, 0.1 sec off, 0.1 sec on, 0.1 sec off, 0.1 sec on, 0.1 sec off, 0.1 sec on, 5 sec off,

Table C.1 Cadence Patterns

Appendix D: Panel Security

Panel Installation / Maintenance Security Checklist
System Description: _____
System Location: _____
Installer: _____ Date: _____

Complete the following Cybersecurity Tasks for Each Panel Installation

- Install the panel in a secure location considering both software and hardware vulnerabilities.
- Change the default password to a unique password.
- Securely configure networks and firewalls.
- Assess security risks.
- Develop a Disaster and Recovery Plan.
- Develop a Backup and Recovery Strategy.
- Install, configure and keep anti virus software updated on all computers which access the panel.
- Keep operating system updated on all computers which access the panel.
- Deliver all required system information upon delivery to the system owner.
- Train end-users on security maintenance tasks upon system delivery.
- For decommissioning, dispose of data securely.
- Ensure the Ethernet cable is removed from the FACP when not being utilized for configuration or for reporting purposes.

Security and Data Protection

Communication Security - Level 1

Stored Data Security - Level 0

Physical Security - Level 1

Access Control Security - Level 1

Honeywell

SILENT KNIGHT

Model 6808 Basic Operating Instructions

These Instructions must be framed and displayed next to the 6808 panel in accordance with NFPA 72 fire code for Local Protected Fire Alarm Systems. Test the system in accordance to NFPA 72.

Operation	Task to Perform
Silence Alarms and Troubles	Press SILENCE and then enter a code if prompted. The Silence LED will light.
Reset Alarms	Press RESET and then enter a code if prompted.
View Alarms, Supervisories, and Troubles	For each type of condition press the Up or Down button associated for Alarms, Supervisories, or Troubles. FIRE: ALRM SUPR TRBL CO: ALRM SUPR SYS: TRBL FIRE: ALARM Waterflow Sw Zone_1 1 of 1 Info>
View Point Status	1. Login to the panel. 2. Press 2 to select Point Functions. 3. Press 2 to select Point Status. 4. Select the desired module by using the Up or Down button. Then press ENTER. 5. Enter the point number.
Conduct a Fire Drill	Hold the DRILL button and then enter a code if prompted. OR 1. Login to the panel. 2. Then Press 1 to select System Tests. 3. Press 1 to select Fire Drill. 4. Press ENTER to start the fire drill. Press ENTER to end the fire drill.
Check Detector Sensitivity	1. Login to the panel. 2. Press 2 for Point Status. 3. From the list that displays, select the SLC module where the desired point is located. 4. The fourth line of the display shows the sensitivity status. “NORMAL” means the detector is in compliance with NFPA 72. “CAL MAINT” means the detector is in compliance with NFPA 72 but maintenance should be performed soon. “CAL TRBLE” means the detector is not in compliance with NFPA 72.
Set Time and Date	1. Login to the panel. 2. Press 4 to select Set Time & Date. 3. Make changes in the fields on the screen as necessary. 4. When the time and date are correct, press ENTER.
Enable / Disable a Point	1. Login to the panel. 2. Press 2 to select Point Functions. 3. Press 1 for Disable / Enable Pt 4. Press 7 for Disable / Enable Pt. 5. Use the Up or Down button to move through the list. Then press ENTER to select the module where the desired point is located. 6. Enter the point or circuit number that you want to disable/enable. 7. Press the right arrow key to toggle between NORMAL (enable) or DISABLE.
View Event History	1. Login to the panel. 2. Press 3 to select Event History. 3. Press the Up or Down button to view events in the history buffer.
For Service Call:	

P/N LS10164-001SK-E Rev B ECN: 151062

Cut along dotted line.

Cut along dotted line.

Manufacturer Warranties and Limitation of Liability

Manufacturer Warranties. Subject to the limitations set forth herein, Manufacturer warrants that the Products manufactured by it in its Northford, Connecticut facility and sold by it to its authorized Distributors shall be free, under normal use and service, from defects in material and workmanship for a period of thirty six months (36) months from the date of manufacture (effective Jan. 1, 2009). The Products manufactured and sold by Manufacturer are date stamped at the time of production. Manufacturer does not warrant Products that are not manufactured by it in its Northford, Connecticut facility but assigns to its Distributor, to the extent possible, any warranty offered by the manufacturer of such product. This warranty shall be void if a Product is altered, serviced or repaired by anyone other than Manufacturer or its authorized Distributors. This warranty shall also be void if there is a failure to maintain the Products and the systems in which they operate in proper working conditions.

MANUFACTURER MAKES NO FURTHER WARRANTIES, AND DISCLAIMS ANY AND ALL OTHER WARRANTIES, EITHER EXPRESSED OR IMPLIED, WITH RESPECT TO THE PRODUCTS, TRADEMARKS, PROGRAMS AND SERVICES RENDERED BY MANUFACTURER INCLUDING WITHOUT LIMITATION, INFRINGEMENT, TITLE, MERCHANTABILITY, OR FITNESS FOR ANY PARTICULAR PURPOSE. MANUFACTURER SHALL NOT BE LIABLE FOR ANY PERSONAL INJURY OR DEATH WHICH MAY ARISE IN THE COURSE OF, OR AS A RESULT OF, PERSONAL, COMMERCIAL OR INDUSTRIAL USES OF ITS PRODUCTS.

This document constitutes the only warranty made by Manufacturer with respect to its products and replaces all previous warranties and is the only warranty made by Manufacturer. No increase or alteration, written or verbal, of the obligation of this warranty is authorized. Manufacturer does not represent that its products will prevent any loss by fire or otherwise.

Warranty Claims. Manufacturer shall replace or repair, at Manufacturer's discretion, each part returned by its authorized Distributor and acknowledged by Manufacturer to be defective, provided that such part shall have been returned to Manufacturer with all charges prepaid and the authorized Distributor has completed Manufacturer's Return Material Authorization form. The replacement part shall come from Manufacturer's stock and may be new or refurbished. THE FOREGOING IS DISTRIBUTOR'S SOLE AND EXCLUSIVE REMEDY IN THE EVENT OF A WARRANTY CLAIM.

Warn-HL-08-2009.fm

Honeywell Silent Knight
12 Clintonville Road
Northford, CT 06472-1610
203.484.7161
www.silentknight.com

LS10146-001SK-E | F | 08-22
©2022 Honeywell International Inc.