TABLE OF CONTENTS

1.0 GENERAL
2.0 TOOLS REQUIRED FOR ASSEMBLY
3.0 COMPONENTS AND HARDWARE PROVIDED WITH THE RACK MOUNT FIBER ENCLOSURE
4.0 ACCESSORIES PURCHASED SEPARATELY
5.0 ENCLOSURE ASSEMBLY
6.0 INSTALLATION OF ACCESSORIES
7.0 CABLE ROUTING AND INSTALLATION

1.0 GENERAL

This document describes the assembly procedure for LEGRAND Patch and Splice Rack Mount Cabinets, part numbers.
EQ01U-CHC (1 Rack Unit), EQ01U-KHC (1 Rack Unit HD), and EQ01U-KHL-M (1 Magnesium Rack Unit HD). Hardware is provided for mounting to 19” racks only.
To mount in 23” racks, Rack Adapter Kit, part number 604045108 is required (sold separately).

2.0 TOOLS REQUIRED FOR ASSEMBLY

2.1) #2 Philips Head Screw Driver – required for enclosure assembly
2.2) #3 Philips Head Screw Driver – required to mount the enclosure to the rack

3.0 COMPONENTS AND HARDWARE PROVIDED WITH THE RACK MOUNT FIBER ENCLOSURE

ITEM #	DESCRIPTION	PART NUMBER	QTY.
1	Enclosure, Tray and Mounting Brackets, 1 Rack Unit	EQ01U-CHC	1
	Enclosure, HD, Tray and Mounting Brackets, 1 Rack Unit	EQ01U-KHC	
	Enclosure, HD, Tray and Mounting Brackets, 1 Rack Unit, Magnesium	EQ01U-KHL-M	
2	Drawer Face, 1 Rack Unit	41400470	1
	Bracket, 1U, HD	41400941	5
3	Cable Manager, Fiber Spool.	70800327	2
4	Straps, Hooks/Loops, Cable Mgt.	70700145	4
5	Straps, D-Ring, Hooks/Loops, 18” Long, Cable Mgt.	70700199-00	2
6	Sleeve, J-Shaped, Adhesive backed, Card Holder, 16" L	71200058	1
7	Label Card	70400878	1
	Label Card, HD	70401093	
8	Washer, lock, #12, External star, phosphor bronze	70100090	1
9	Screw 12-24 x .625, PN HD, CMB DRV, ZNC PLT	70100070 / 70100070-59	4
10	#6-32 screws for Mounting Brackets		4

4.0 ACCESSORIES PURCHASED SEPARATELY

ITEM #	DESCRIPTION	PART NUMBER	QTY.
11	Strain Relief Bracket, Upper	ECQ-BR	2
12	Fiber Spool Kit, 8 Pieces	60401185	1
13	Rack Adapter Kit	604045108	1

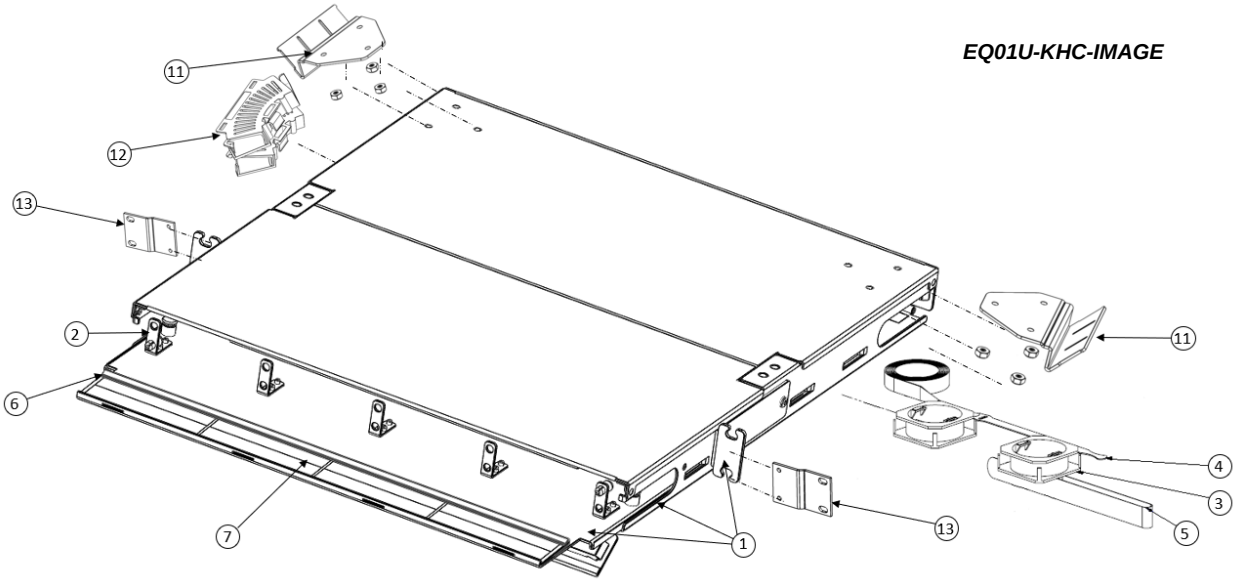

5.0 ENCLOSURE ASSEMBLY

5.1) Inspect the package contents before assembling to ensure conformance with the parts listed in Section **3.0**, then determine if the accessories listed in Section **4.0)** are required.

5.2) The Drawer Face (Item 2) is pre-assembled to the tray at the factory (Figure 1).

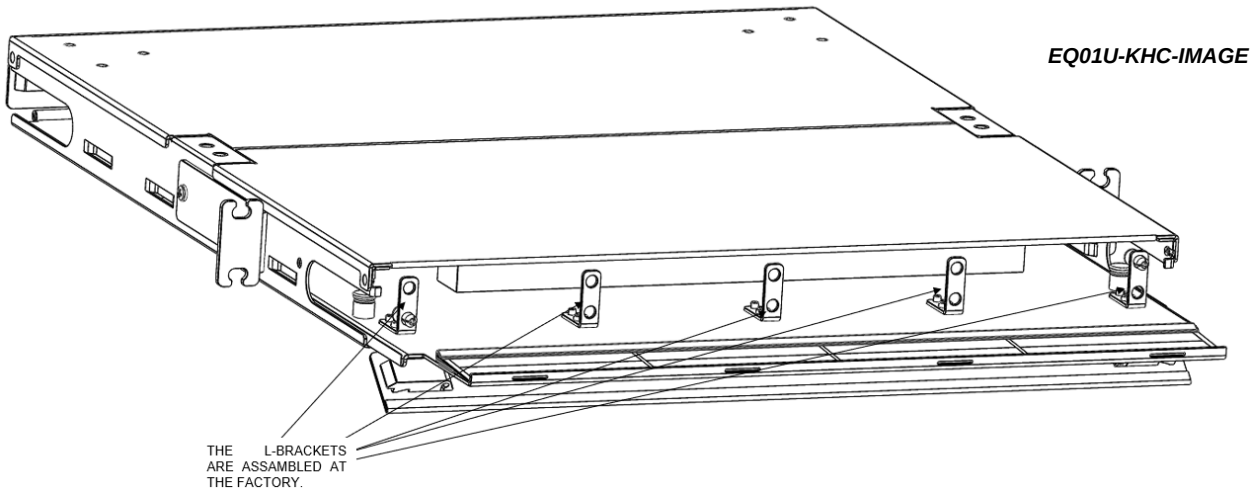

Figure 1

5.3) Using a #2 Phillips Head Screw Driver and the screws provided with the enclosure, attach one Mounting Bracket to each side of the enclosure using the mounting holes provided (Figure 2). An alternate mounting position (Figure 2a) is available

for 19" enclosures. To have an enclosure that installs more rearward in racks, use the 2-hole pattern closest to the front side of the enclosure.

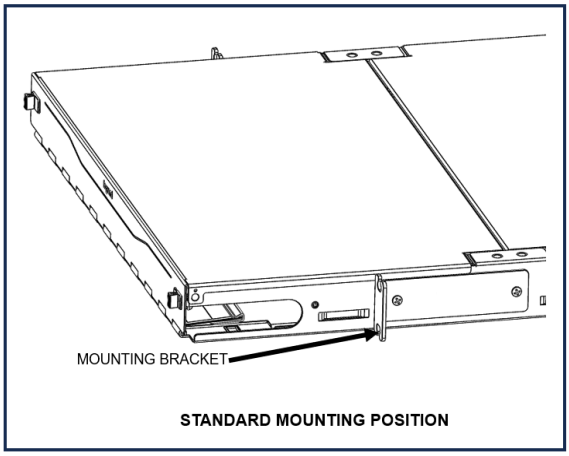

Figure 2

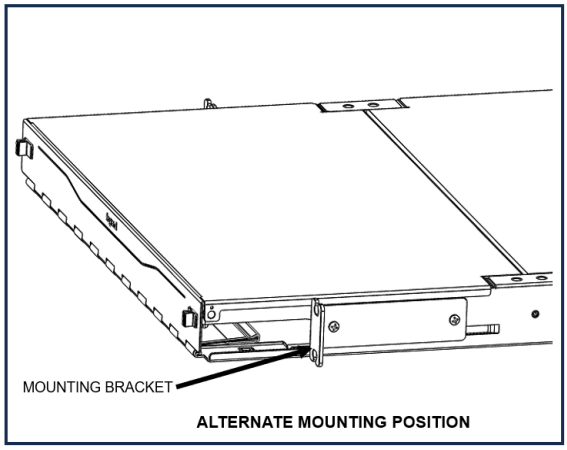

Figure 2a

5.4) The enclosure is ready to mount to the rack using the screws provided and a #3 Phillips Head Screwdriver.

6.0 INSTALLATION OF ACCESSORIES

(The fiber enclosures can support different styles of fiber bend radius control. The 1U enclosure tray can accept both styles. Figure 3a illustrates the current style and Figure 3b illustrates an alternate style.)

6.1) To assemble the fiber manager provided with this enclosure: Attach Fiber Spool Cable Managers to the tray by inserting the (2) snap hook tabs into their mating tray slots then push the part down towards the tray until the snap hooks engage. An audible click will indicate a locked-in position. Follow the same procedure for additional assemblies.

6.2) Figure 3a depicts the fiber spools secured to the tray (rear section).

6.3) When required, attach the Upper strain relief bracket (Item 8) to the rear of the enclosure as shown in Figure 6. Threaded studs are provided on the inside surface of the enclosure to accommodate the bracket.

6.4) To attach the Label Sleeve (Item 6) to the front top side of the tray, remove the paper backing exposing the adhesive. Using the Label Card (Item 7) in the Label Sleeve to locate the correct distance of the Label Sleeve from the front of the tray; locate the Label Card just behind the tray front edge and firmly press the Label Sleeve to secure (minimum distance of the Label Sleeve is approximately 0.80 inches). See Figure 2b.

6.5) Repeat steps **5.0** through **5.4** to assemble additional cabinets, and steps **6.0** through **6.4** for installation of accessories.

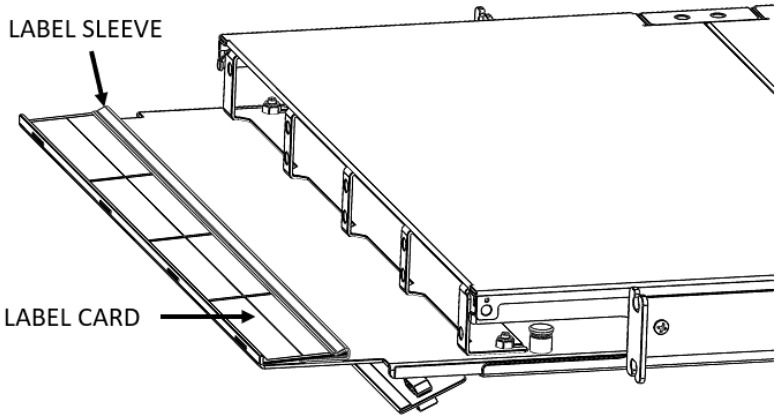

Figure 2b

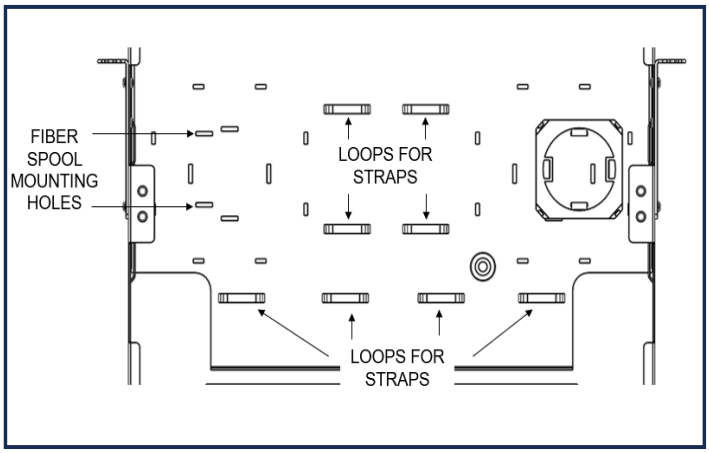

Figure 3

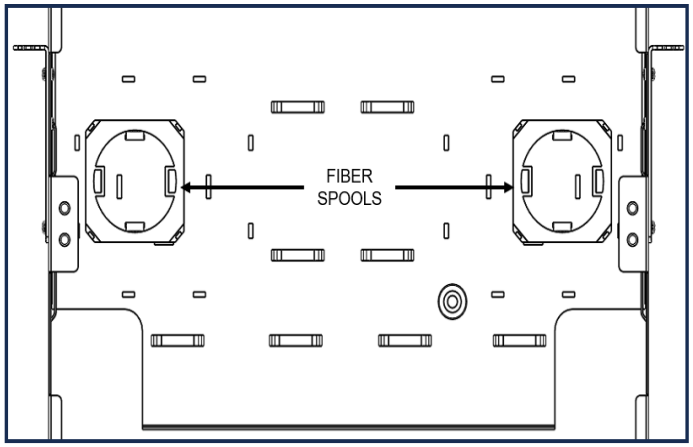

Figure 3a

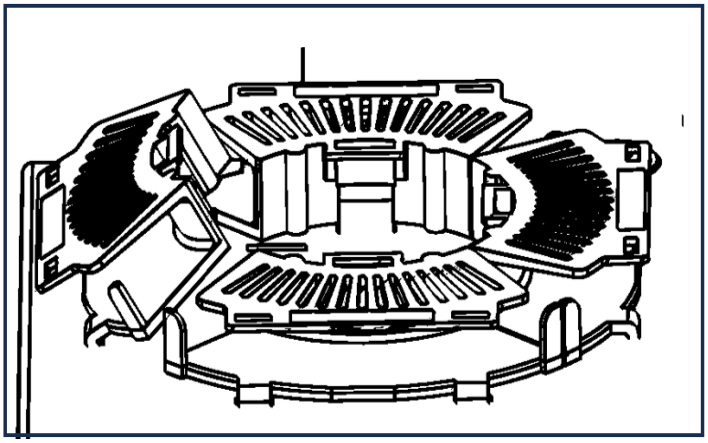

Figure 3b

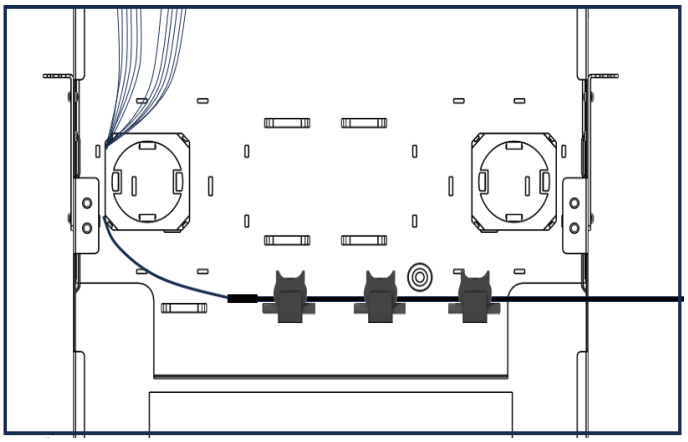

Figure 4

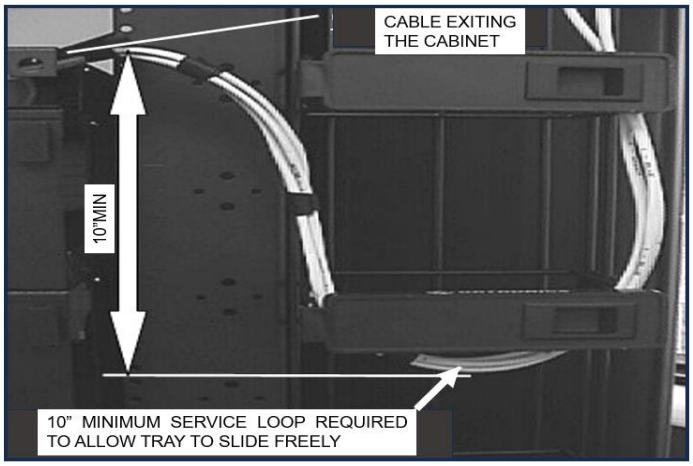

Figure 5

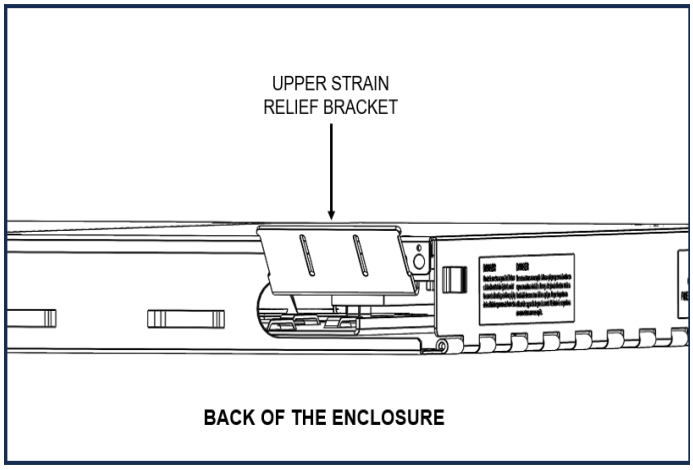

Figure 6

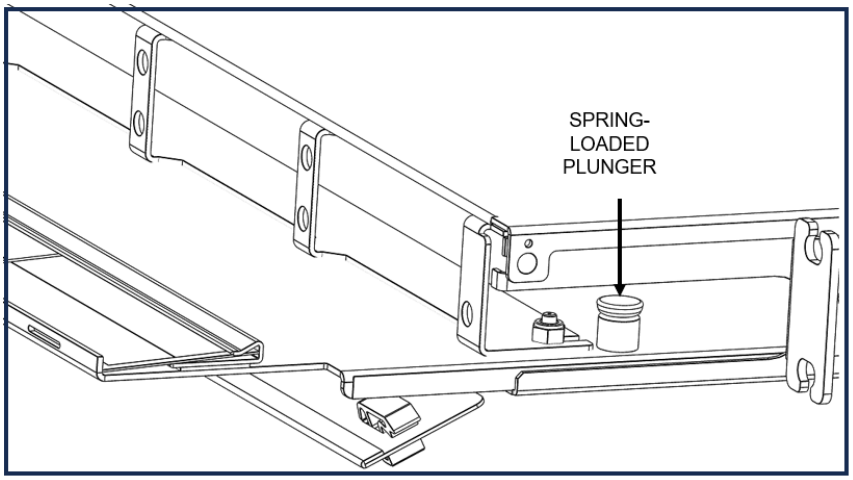

Figure 7

7.0 CABLE ROUTING AND INSTALLATION

7.1) Remove approximately 1 meter (39 inches) of cable jacket. Trim the central strength member and/or the aramid yarn back to the cable jacket. Terminate per the manufacturer's instructions.
7.2) Construct a service coil approximately 10" in long, as shown in Figure 5, to allow the tray to slide out the front of the cabinet freely. Secure the cable to the Upper Strain Relief Bracket (Item 8) using a Cable Mgt. Strap (Item 4).
7.3) An example of a Patch only wiring scheme is depicted in Figure 4.
7.4) The 2 spring-loaded plungers (Figure 7) will lock the tray in place. To unlock the tray, lift the plungers.

FOR QUESTIONS AND/OR ADDITIONAL INFORMATION, CONTACT LEGRAND AT THE FOLLOWING WEB ADDRESS, OR YOUR MANUFACTURER'S REPRESENTATIVE.

WWW.LEGRAND.US